Operation and Maintenance Plan
RCRA Groundwater Corrective Action

E.P.A. ID: KSD087418695

Prepared for:
MRP Properties Company, LLC
1400 South M Street
Arkansas City, Kansas 67005

Prepared by:
MWH Americas, Inc.
1801 California Street, Suite 2900
Denver, Colorado 80202-2606

Arkansas City
KANSAS

August 29, 2011

MWH®
BUILDING A BETTER WORLD

OPERATION AND MAINTENANCE PLAN

RCRA GROUNDWATER CORRECTIVE ACTION

MRP PROPERTIES COMPANY, LLC

ARKANSAS CITY, KANSAS

EPA ID: KSD087418695

Prepared for:

MRP PROPERTIES COMPANY, LLC

SAN ANTONIO, TEXAS

Prepared by:

MWH AMERICAS, INC.

Denver, Colorado

August 29, 2011

TABLE OF CONTENTS

1.0 INTRODUCTION 1-1

1.1 System Overview 1-1

1.2 Plan Organization 1-1

2.0 SYSTEM DESCRIPTION 2-1

2.1 Groundwater Recovery and Treatment System 2-1

2.2 Product Recovery System 2-2

2.3 Pump System Controls 2-3

3.0 PREVENTIVE MAINTENANCE 3-1

3.1 Maintenance of Groundwater Recovery System 3-1

3.1.1 Groundwater Pumps 3-1

3.1.2 Monitoring Specific Capacity 3-2

3.1.3 Well Screen Treatment 3-2

3.1.3.1 Recovery Well Treatment Overview 3-2

3.1.3.2 Physical Displacement 3-3

3.1.3.3 Chemical Treatment 3-3

3.2 Maintenance of the Product Recovery System 3-4

3.3 Spare Parts 3-5

4.0 OPERATIONAL MONITORING 4-1

4.1 Bioreactor Inlet Flow Monitoring 4-1

4.2 Recovered Product Vessel V-7106 Monitoring 4-1

4.3 Control Panel Monitoring 4-2

4.4 Wellhead Monitoring 4-2

TABLE OF CONTENTS

LIST OF TABLES

Table	Title
1	Summary of Recovery Well Pump Equipment

LIST OF FIGURES

Figure	Title
1	Groundwater Corrective Action System Area Plot Plan (RW-35 TO RW-75)
2	Groundwater Recovery Process Flow Diagram
3	Vessel V-7106 Location Map
4	Groundwater Corrective Action Recovery Well Typical Wellhead Pipe Layout
5	Example Log Form
6	SITEPRO 2000 Indicator Light Status
7	PLC Indicator Light Status

LIST OF APPENDICES

Appendix	Title
A	Recovery Well Completion Details
B	Submersible Pump and Electric Motor Technical Data
C	ORS Small Diameter Probe Scavenger Pump Installation and Operation Manual
D	ORS SITEPRO 2000 Control Panel Installation and Operation Manual for the Probe Scavenger Pumps
E	Custom Control Panels
E1	Wiring Diagrams and Parts List
E2	Vendor Documents (on CD-ROM)
F	Groundwater and Product Flow Monitoring Equipment

1.0 INTRODUCTION

This Operation and Maintenance Plan (O&M Plan) is designed to assist the system operators in operating, maintaining and monitoring the groundwater corrective action system at the MRP Properties Company (MRP) facility in Arkansas City, Kansas. It is recommended that the operators familiarize themselves with the plan and refer to it as needed during system operations.

1.1 System Overview

Portions of the groundwater corrective action system were constructed and initially operated in 1995 to address groundwater contamination resulting from phase separated hydrocarbon (product) floating on top of the water table beneath parts of the refinery. The system was upgraded in the summer of 1998 to increase groundwater recovery system capacity to capture groundwater downgradient of the Land Treatment Unit (LTU) and the closed surface impoundments (No. 1 and No. 2 Closed Surface Impoundments and the No. 3A Aerated Lagoon). Four recovery wells (RW-45, RW-55, RW-65, and RW-75) were added to the groundwater corrective action system in December 2001 to further enable the system to meet the gradient reversal requirements established by the RCRA Permit, issued in October 2001.

The groundwater corrective action system consists of 9 recovery wells. Each well contains a groundwater extraction pump. Product pumps are installed in those recovery wells where free product is present in recoverable quantities. The product recovered by the product pumps is pumped to a product storage tank for recycling. The groundwater is pumped to the wastewater treatment system consisting of a bioreactor tank and a series of oxidation ponds. The treated groundwater is discharged to the Walnut River under the facility National Pollutant Discharge Elimination System (NPDES) Permit, Kansas Water Pollution Control Permit No. I-WA18-P002.

1.2 Plan Organization

The O&M Plan is divided into four sections: this introduction (Section 1), a general description of the system (Section 2), recommended preventive maintenance and checks (Section 3) and a summary of operational monitoring (Section 4). Recovery well completion logs are provided in

Appendix A. Appendices B, C D, E, and F contain the manufacturer's equipment manuals for the groundwater pumps, product pumps and pump controls, and flow monitoring.

2.0 SYSTEM DESCRIPTION

The groundwater corrective action system recovery wells are shown on Figure 1 and consist of wells RW-35, RW-40, RW-45, RW-50, RW-55, RW-60, RW-65, RW-70, and RW-75. Each well is equipped with a submersible pump near the bottom of the well for extracting groundwater. In order to prevent free-phase hydrocarbon product from being captured with the groundwater, wells containing free product also have an independently controlled product pump installed which removes the hydrocarbon phase from the top of the water table. Recovery wells RW-35 through RW-70 are designed to intercept the groundwater downgradient of the facility's Waste Management Area (WMA). Construction details for the groundwater corrective action system recovery wells are provided in Appendix A.

Figure 2 illustrates the process flow diagram for the recovery well system. The groundwater pumps in recovery wells RW-35 through RW-75 connect to a common six-inch diameter line that discharges into the bioreactor tank. The product recovery pumps all connect to a common two-inch diameter line that discharges into product recovery vessel V-7106 (Figure 3). The water and product recovery pipelines are buried at a depth of approximately three feet.

2.1 Groundwater Recovery and Treatment System

The groundwater extraction pumps are Grundfos (or equivalent) stainless steel submersible pumps powered by three-phase 460 volt electric submersible motors. Table 1 presents a summary of the groundwater pumps currently in use. The groundwater recovery system typically extracts between 1500 and 2000 gallons per minute (gpm). Manufacturer information for the groundwater pumps and motors is provided in Appendix B.

Figure 4 shows typical wellhead connection details for the groundwater recovery pumps. As shown, the pumps are connected either to 3-inch diameter schedule 80 PVC pipe within the well casing that joins to 3-inch diameter schedule 80 PVC pipe at the surface. Each wellhead is equipped with an instantaneous/totalizing flow meter. The pumps may be removed from the wells by disconnecting the pipe at the wellhead and raising the pump discharge pipe column and safety cable with a crane or other suitable equipment.

The groundwater is pumped to the wastewater treatment system, consisting of bioreactor tank R-7101 and a downstream series of oxidation ponds. This treatment system degrades the dissolved organic compounds in the collected groundwater. The bioreactor tank system was originally constructed to treat wastewater streams generated during refinery operations and has a capacity of 1.66 million gallons. A second bioreactor tank, R-7102, with the same capacity as R-7101, is available for backup if needed. The oxygen content of the recovered groundwater stream is enriched in the bioreactor using ambient air supplied by a 75 HP blower located at the base of the bioreactor tanks. A backup 75 hp blower is also available should the blower have to be taken out of service for maintenance.

Groundwater is gravity fed from the bioreactor tank to the No. 1A pond and then flows into a series of oxidation ponds before being released to the Walnut River through a NPDES-permitted outfall. These ponds do not have any mechanical systems requiring maintenance. The discharge is monitored under the requirements of the NPDES permit.

2.2 Product Recovery System

Recovery wells containing free product are equipped with ORS Small Diameter Probe Scavenger pumps, set at the level of the product. These pumps are equipped with sensor probes that operate the pumps. The product pump float control system is designed to prevent the pump from operating unless product is present. Manufacturer information for the Probe Scavenger pumps is provided in Appendix C.

The ORS Probe Scavenger pump is a dynamic system consisting of a submersible pump assembly, a product probe and a control unit. When set in the automatic position, the probe will detect product in the pump reservoir and start the pump, causing product to be pumped to the product recovery vessel (V-7106).

The product is removed from vessel V-7106 on an as-need basis and recycled. Vessel V-7106 is monitored on a daily basis and product recovery pickups by outside contractors are scheduled

in advance. The product transfers are scheduled when approximately 170 barrels are present leaving approximately 114 barrels of available capacity.

2.3 Pump System Controls

The control panels for recovery wells RW-40 and RW-50 are located in the motor control center located immediately south of Bioreactor Tank R-7102. The control panels for RW-40 and RW-50 may be relocated in the future to the well location. The control panels for recovery wells RW-35, RW-45, RW-55, RW-60, RW-65, and RW-70 are located at the wellhead. The groundwater recovery pump, product pump and associated probes for each well are controlled with an ORS SITEPRO 2000 or a custom built control panel. The control panels include hand-off-auto (HOA) switches and indicator lights for the product pump and groundwater recovery pump, probe indicator status lights, and a power disconnect switch. Information for these pump control panels is provided in Appendices D and E.

In-well sensors monitored by the control panels include the high and low water level indicators and the product indicator. The low water level indicator is set just above the top of the groundwater pumps so that groundwater pumping will be continuous unless the water level drops to near the bottom of the well. Setting the low-level floats nearer to the groundwater pumps optimizes the groundwater gradient toward the site by dropping the groundwater level.

The Probe Scavenger pumps will operate as long as they are in product. If the product level is below the Probe Scavenger pump intake or the water level increases above the Probe Scavenger intake, the Probe Scavenger pump will automatically shut off and remain off until the product level returns to its original position or the pump is manually lowered or raised into the product.

3.0 PREVENTIVE MAINTENANCE

It is important that the systems be checked frequently during the work week so that any operating problems can be identified and corrected quickly. This check should include an inspection of the above ground piping, wellheads, control panels and product recovery vessel. Operational monitoring, discussed in Section 4, should also be performed as part of this inspection.

Additional suggestions regarding routine maintenance and repairs are provided below. The appropriate electrical control and/or breaker should always be de-energized and locked out prior to performing maintenance or repairs on electrical components. It should be noted that maintenance details for the bioreactors and oxidation ponds are not discussed in this Section. The treatment of the recovered groundwater is maintained in accordance with the facility NPDES permit, as required by the RCRA Permit (Section IV.C.1.c.)

3.1 Maintenance of Groundwater Recovery System

3.1.1 Groundwater Pumps

The groundwater recovery pumps should be monitored daily Monday through Friday to verify that they are pumping at their normal rate. The pumping rate may be adjusted by opening or closing the valve at the wellhead as dictated by groundwater level conditions. Opening the valve is normally done in response to increasing water levels in the well while closing the valve is normally done if the pumping water level drawdown is excessive resulting in frequent on-and-off cycling. If the pumping rate decreases significantly, the groundwater and product levels in the well should be measured to determine if the lower pumping rate is due to a decrease in the water table elevation or a result of pump, discharge piping or well screen problems. Additional inspection may be warranted, including removal and inspection of the pump system. Damaged or corroded pipe, clamps and valves should be replaced, and worn pumps should be rebuilt or replaced as necessary. Preventive maintenance pertaining to well screen fouling is discussed in Section 3.1.3.

A groundwater recovery pump may discontinue operating due to an electrical problem such as a

short circuit in the pump motor or power cable, a faulty water level probe or a control panel failure. If the power has kicked off at the breaker, a short circuit or power surge is indicated. If the power is still on then a problem with the probe or control panel is more likely. Standard electrical troubleshooting procedures should be used to pinpoint problems that cannot be readily identified.

3.1.2 Monitoring Specific Capacity

The specific capacity of a well is its yield per unit drawdown. The specific capacity is expressed as gallons per minute (gpm) per foot of drawdown. It is defined as the pumping rate divided by the drawdown in the recovery well.

$$\text{Specific Capacity (SC)} = Q \div S$$

Where: SC = specific well capacity (gpm per ft. of drawdown)
Q = groundwater pumping rate from well (gpm)
S = drawdown (ft.)

Specific capacity should be monitored semiannually. Significant drops in specific capacity are an indicator of well screen fouling. The specific capacity is also influenced by the aquifer saturated thickness, which varies in response to flow in the Arkansas and Walnut Rivers.

3.1.3 Well Screen Treatment

Well screen treatment is necessary when mineral or biological fouling of the well screens has resulted in a loss of well pumping capacity. Based upon previous experience and the data collected through the well monitoring samples, a treatment program has been developed for the recovery wells. The well treatment typically utilizes an acid solution for dissolving mineral deposits and shock chlorination to help clear biological fouling.

3.1.3.1 Recovery Well Treatment Overview

Periodic treatment will be necessary to restore the specific capacity of the recovery wells. Over

time mineral encrustation and biofouling reduce the specific capacity of the wells by plugging the well screens. Decreased specific capacity is recognized initially by observing a drop in the pumping level in a recovery well operating at a constant pumping rate. Groundwater pumping levels are monitored in the recovery wells at least once each month. An extreme case of loss of specific capacity would be indicated by the pump operation cycles counter located in the pump control panel. The cycle counter will increment each time the pumping level drops to the low water level sensor in the well thereby shutting down the pump.

Well rehabilitation may use physical swabbing and pumping procedures, coupled with the use of chemicals. Rehabilitation is recommended if the well yield, efficiency or specific capacity declines by more than 75 percent.

3.1.3.2 Physical Displacement

Surging with over-pumping is a common well rehabilitation procedure. Surging can be performed by using surge blocks or by injecting air in the casing above the well screen. It is labor-intensive, and often requires specialized equipment (e.g., service rigs). Manual brushing also is effective in dislodging material from the well screen and casing. Over-pumping involves removing water from the well, either by bailing or pumping, and allows water from the aquifer to flow into the well, removing any fines or biofilm fragments that were dislodged through surging or brushing.

3.1.3.3 Chemical Treatment

Shock chlorination is used to control biofouling. Chlorine is added at concentrations in the 500 mg/L to 2,000 mg/L range, and generally precedes acid treatment. After treating for 24 hours, the chlorinated water is surged within the well, and then pumped out. Chlorine concentrations dissipate rapidly and the water is pumped to the wastewater treatment system.

Phosphoric acid is used to dissolve iron and manganese oxides and carbonate encrustation, and exert an antibacterial effect by providing a pH shock to bacteria typically adapted to neutral pH. The acid solution is added to a well within the screen interval at a concentration sufficient to

lower the pH of the water in the well to 3 or lower. Sufficient acid solution volume is added to the well to push the acid solution through the screen and into the filter pack and formation immediately surrounding the well. The acid solution is left in the well to react with encrustations and biofilms for approximately 24 hours and then pumped to the wastewater treatment system. The treatment time varies from a few hours to more than 24 hours, depending of the severity of the fouling.

3.2 Maintenance of the Product Recovery System

The product recovery pumps should be monitored regularly to verify that they are cycling and pumping at their normal rate. If the pump is sitting too high or too low in the well, its position may be manually adjusted with the cable winch. The diagrams provided in Figures 6 and 7, show how to determine the Probe Scavenger pump status from the probe indicator lights. Adjustment of the product pump position should be needed infrequently as groundwater pumping typically maintains the pumping water level at a relatively constant depth.

It is recommended that the Probe Scavenger pumps be pulled from the recovery wells and inspected and cleaned as operational conditions warrant. Cleaning should be performed with a soft brush using clean water. Cleaning should include the probes, screen inlets and outer surface of the pump/motor unit. Check valves, product recovery lines and power cables should also be checked and replaced if not operating correctly or showing evidence of excessive wear or corrosion.

If water enters the reservoir, the indicator will blink on and off and the product pump will not run when set on the auto position. To clear the water from the reservoir, the pump should be started in the manual position three to four times for a period of about five seconds only. Afterwards, the pump switch should be returned to the auto position. If water in the pump reservoir continues to be a problem, the position of the pump in the well should be checked and adjusted as necessary.

The product recovery system will require troubleshooting if a pump is positioned in product but

fails to cycle and pump properly. The manuals provided in Appendices C and D provides troubleshooting advice for the Probe Scavenger pumps. Depending on the type and severity of the problem, it may also be necessary to call the manufacturer for technical assistance. Problems commonly encountered in the well include stuck floats, broken check valves, pinched product lines, motor/pump decoupling and motor failure due to excessive product pumping.

3.3 Spare Parts

An appropriate inventory of spare parts for the groundwater Corrective Action system should be maintained at the facility. Typically, this will include at least one groundwater pump and one product pump, and pump motors.

4.0 OPERATIONAL MONITORING

Operational monitoring allows for measuring the performance of the recovery system, adjusting the system to optimize groundwater and product recovery, and identifying potential problems in system operation. An example operational monitoring log for the groundwater recovery system is provided in Figure 5 and discussed in more detail below. This log form may be revised as needed by the operations personnel. The log form will include name of personnel recording the data, date of measurement, groundwater pumping rate, totalized groundwater flow, hour meter run time, water pump cycles, product pump cycles, product meter accumulated flow, periodic measurements of the product level in vessel V-7106, and record of product transfers for recycling. Operation monitoring will be conducted Monday through Friday, except on holidays.

4.1 Bioreactor Inlet Flow Monitoring

The instantaneous and totalized flow into the bioreactor tanks should be checked and recorded at a minimum on a weekly basis. This information will provide a means for determining the total amount of groundwater extracted and treated. It will also provide an instant check on the entire groundwater recovery system.

4.2 Recovered Product Vessel V-7106 Monitoring

The product level in V-7106 is obtained through an exterior mounted glass liquid level site gauge. The storage capacity of vessel V-7106 is 250 barrels. Product transfers should be scheduled when the vessel contains approximately 170 barrels. A site gauge graduated in one inch intervals is used to measure the volume of product contained in vessel V-7106.Subtraction of the product level thickness from the previously measured product level, taking into account any product removed, will provide the number of barrels of product recovered since the last measurement.

V-7106 Product Volume (barrels) = $3.1416 * r^2 * w * 7.48$ gallons/ft^3* 1 barrel / 42 gallons

where: r = Radius of Vessel V-7106 = 5.0 ft)

w = Measured product thickness (inches)

A simple conversion of 1.17 barrels per inch of liquid height can be used.

Operations personnel should schedule a transfer when approximately 170 barrels of product are present in vessel V-7106. Transfers of product or water should be noted on the operational monitoring log.

4.3 Control Panel Monitoring

The control panels for recovery wells RW-40 and RW-50 are located in the Motor Control Center. The control panels for recovery wells RW-35, RW-45, RW-55, RW-60, RW-65, RW-70, and RW-75 are located at the wells. The recovery well control panels should be checked daily (Monday through Friday) to make sure that the pumps are energized and set in the auto position. The groundwater pumps should generally be operating. Product pumps cycle relatively frequently and can be either operating or not operating depending on their position in the pumping cycle.

The information provided on the control panel should be recorded weekly and can be used to evaluate system performance and adjust system operations where indicated. The number of pump cycles, operating time and totalized flow should be recorded for each groundwater pump. These pumps should have relatively few pump cycles with near continuous operating time. If a pump is cycling too often, its pumping rate may require adjustment at the wellhead or the low level probe position may need to be checked. Similarly, the number of pump cycles, operating time and current cycle rate should be recorded for each of the product pumps. If a product pump is not operating and cycling correctly, it may be positioned incorrectly in the product, or there may not be any product to recover. The probe status lights on the SITEPRO 2000 control panel or the Direct Logic Programmable Logic Controller (PLC) (Figures 6 and 7) may be used with the measured product and water level to determine well conditions and corrective action if necessary.

4.4 Wellhead Monitoring

The wellheads should be inspected daily (Monday through Friday) with both a totalized flow and

an instantaneous flow rate recorded for each groundwater pump. The flow rate should be consistent with previous days. If not, it is important to determine what has changed with the pump operation and repair or adjust the system, accordingly. The flow data also serves as a record of the amount of groundwater removed from each well and is needed for evaluating the system's effectiveness.

The depth to product and water should be measured and recorded on a monthly basis, to the nearest hundredth of a foot. This data is necessary for evaluating the performance of the groundwater pumps and the product pumps. The data is also useful in combination with the probe status information in determining whether the product pumps are at an optimum depth or whether adjustments are necessary.

TABLES

Table 1 Summary of Recovery Well Pump Equipment

Recovery Well	Well Casing Dia. (in)	Motor Horse Power	Groundwater Pump Model	Product Pump Model
RW-35	12	15	Grundfos 230S150-4	ORS Probe Scavenger
RW-40	12	15	Grundfos 230S150-5	ORS Probe Scavenger
RW-45	12	15	Grundfos 230S150-4	ORS Probe Scavenger
RW-50	12	15	Grundfos 230S150-4	
RW-55	12	15	Grundfos 230S150-5	
RW-60	12	15	Grundfos 230S150-5	
RW-65	12	15	Grundfos 230S150-5	
RW-70	12	15	Grundfos 230S150-4	ORS Probe Scavenger
RW-75	12	15	Grundfos 230S150-4	ORS Probe Scavenger

FIGURES

Path: N:\GIS\GWO&M\MXD\GWCorrActionSystemArea.mxd Date: 8/23/2011

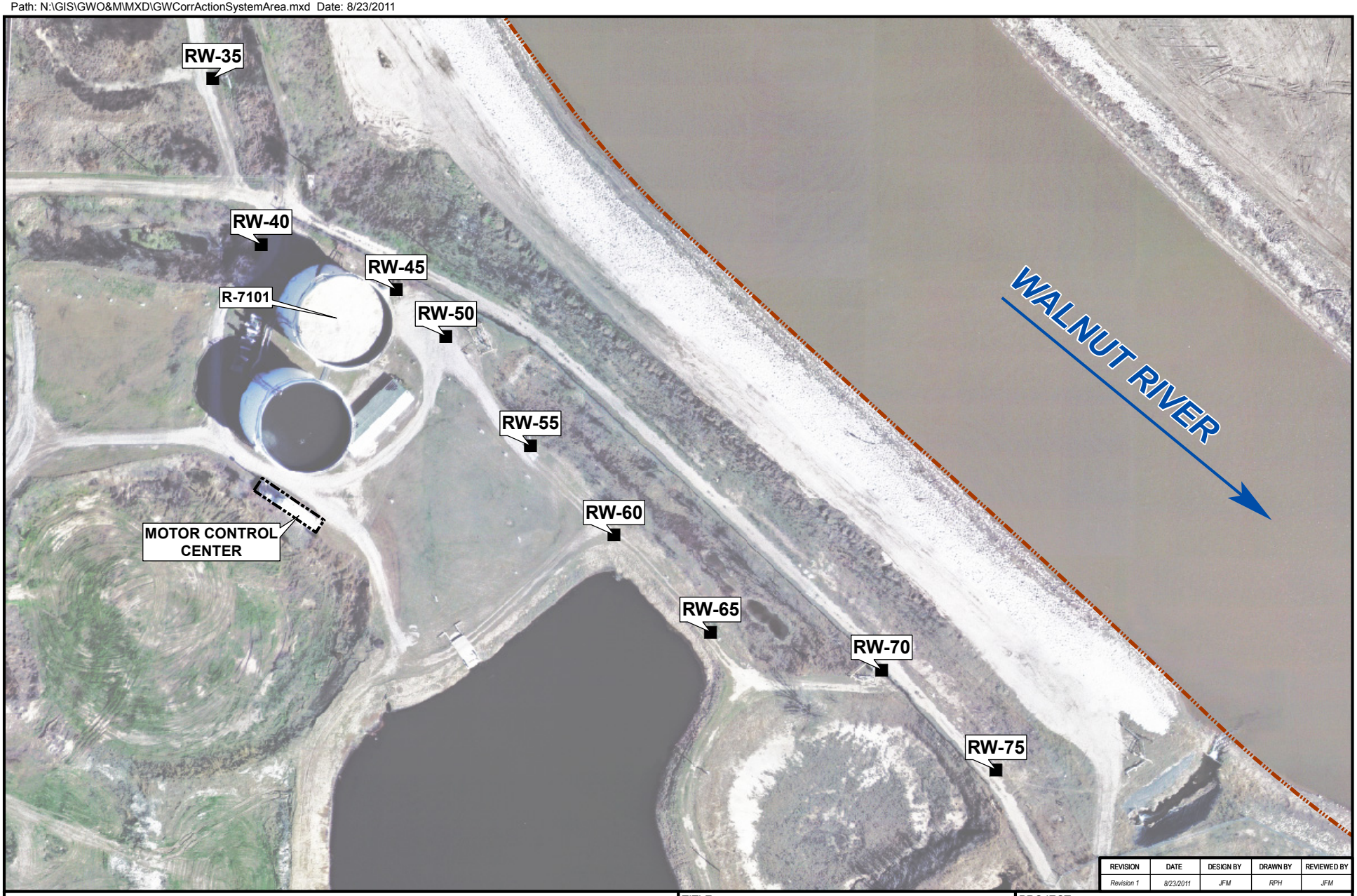

REVISION	DATE	DESIGN BY	DRAWN BY	REVIEWED BY
Revision 1	8/23/2011	JFM	RPH	JFM

EXPLANATION

- SITE PROPERTY BOUNDARY (APPROXIMATE)
- MOTOR CONTROL CENTER
- RW-45 CORRECTIVE ACTION GROUNDWATER RECOVERY WELL
- DIRECTION OF SURFACE WATER FLOW

N W E S

SCALE IN FEET

0 125

AERIAL PHOTO: MARCH 12, 2005

TITLE:

GROUNDWATER CORRECTIVE ACTION SYSTEM AREA PLOT PLAN (RW-35 TO RW-75)

PROJECT:

MRP PROPERTIES COMPANY, LLC
ARKANSAS CITY, KANSAS

MWH

FIGURE No.: 1

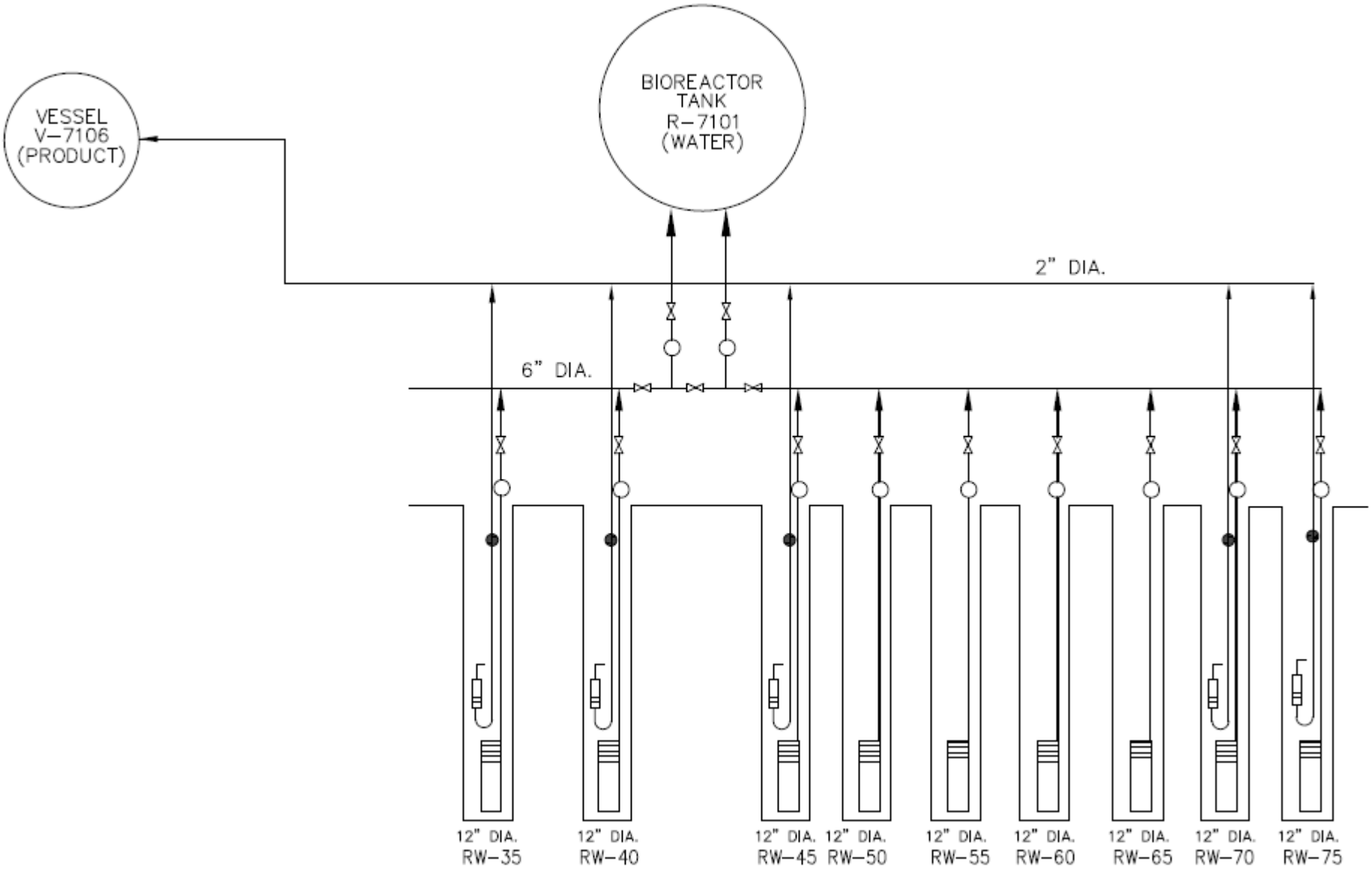

EXPLANATION

- FLOW VALVE
- FLOW METER
- PRODUCT METER
- PRODUCT PUMP
- ELECTRIC SUBMERSIBLE PUMP

TITLE:

GROUNDWATER RECOVERY FLOW PROCESS DIAGRAM

PROJECT:

MRP PROPERTIES COMPANY, LLC
ARKANSAS CITY, KANSAS

MWH

FIGURE No.: **2**

Path: N:\GIS\GWO&M\MXD\V7106.mxd Date: 8/23/2011

REVISION	DATE	DESIGN BY	DRAWN BY	REVIEWED BY
Revision 1	8/23/2011	JFM	RPH	JFM

EXPLANATION

SITE PROPERTY BOUNDARY (APPROXIMATE)

DIRECTION OF SURFACE WATER FLOW

N
W E
S

SCALE IN FEET

0 700

AERIAL PHOTO: MARCH 12, 2005

TITLE:

VESSEL V-7106 LOCATION MAP

PROJECT:

MRP PROPERTIES COMPANY, LLC
ARKANSAS CITY, KANSAS

MWH

FIGURE No.:

3

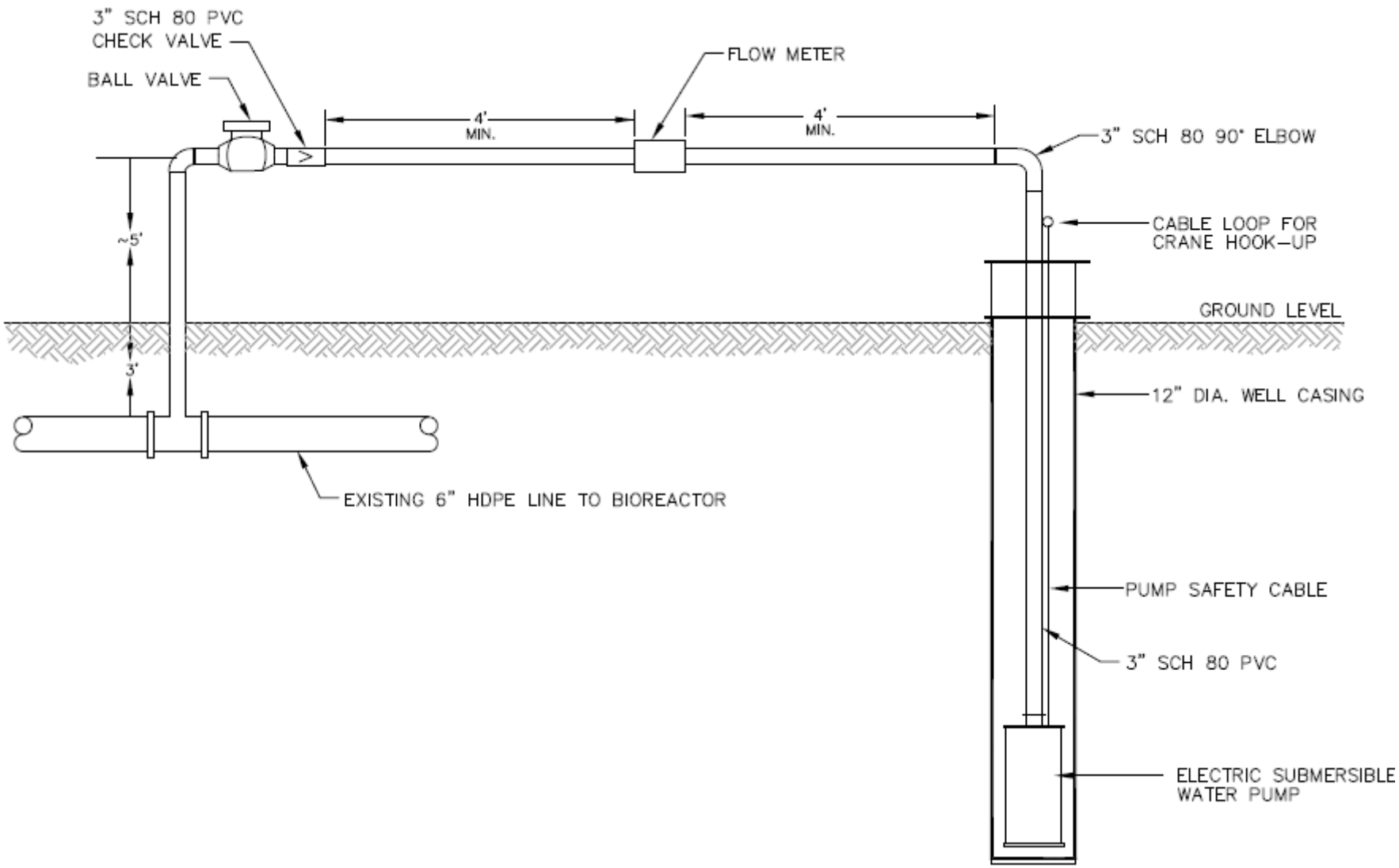

EXPLANATION

TITLE:

RECOVERY WELLHEAD PIPE LAYOUT

PROJECT:

MRP PROPERTIES COMPANY, LLC
ARKANSAS CITY, KANSAS

MWH

FIGURE No.:

4

	DATE:	INSPECTED BY:						
						RCRA Corrective Action Wells		
RECOVERY WELLS RW-11 TO RW-45		RW-11	RW-21	RW-31	RW-33	RW-35	RW-40	RW-45
	Time							
	Product Accumulator Reading							
	Ground Water pump cycles							
	G.W. pump operational hours							
	Product pump cycles							
	Ground Water Flow Rate (gpm)							
	Totalized Flow (gallons)							
	Depth to Water(ft & 10ths)							
	Depth to Product (ft & 10ths)							

		RCRA Corrective Action Wells					
RECOVERY WELLS RW-50 TO RW-75		RW-50	RW-55	RW-60	RW-65	RW-70	RW-75
	Time						
	Product Accumulator Reading						
	Ground Water pump cycles						
	G.W. pump operational hours						
	Product pump cycles						
	Ground Water Flow Rate (gpm)						
	Totalized Flow (gallons)						
	Depth to Water (ft & 10ths)						
	Depth to Product (ft & 10ths)						

WATER FLOW	Flow Meter Location:	Bio-Inf-A (west) RW-11/RW-40	Bio-Inf-A (east) RW-50/RW-80A	Product Accumulator Reading	RW-10	RW-30
	Time (hh:mm)					
	Flow Rate (gpm)					
	Totalized Flow (gallons)					

EXPLANATION

TITLE:

EXAMPLE LOG FORM

PROJECT:

MRP PROPERTIES COMPANY, LLC
ARKANSAS CITY, KANSAS

MWH

FIGURE No.: **5**

PROBE STATUS	PRODUCT PUMP STATUS	ACTION
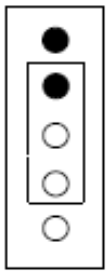	Off	Product pump is below product layer, raise product pump into product (if present)
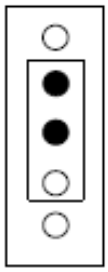	Off	Product pump is above product layer, lower product pump into product (if present)
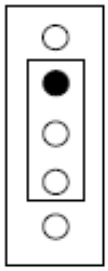	Off	No product present. Product pump is located properly, do not adjust product pump.
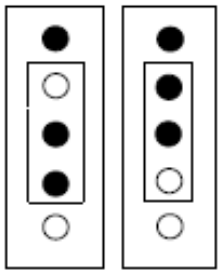	On	Product pump should be operating and recovering product. Do not adjust adjust product pump.
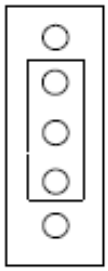	Product high Ground water high	Note: Black filled indicator position on schematic panel, indicates illuminated light.

TITLE:

SITEPRO 2000 CONTROL PANEL INDICATOR LIGHT STATUS

PROJECT:

MRP PROPERTIES COMPANY, LLC
ARKANSAS CITY, KANSAS

MWH

FIGURE No.:

6

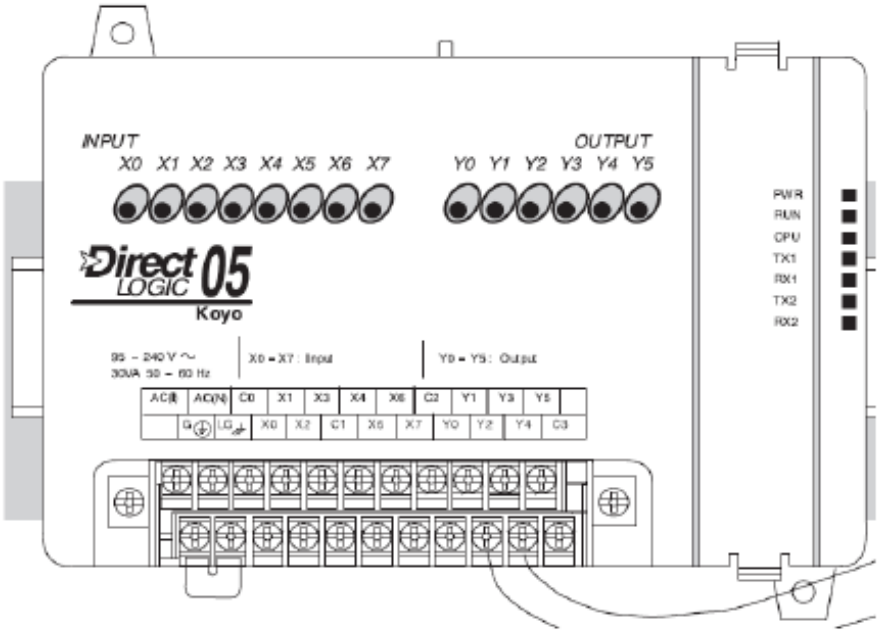

LOW WATER FLOAT IS SUBMERGED AND WATER PUMP WILL RUN IN AUTO

WATER PUMP CAN ONLY BE RUN IN HAND POSITION

PRODUCT FLOAT IS ON OIL AND PRODUCT PUMP IS RUNNING

HI WATER [X1] FLOAT IS ON WATER PRODUCT PUMP IS OFF

TITLE:

PLC CONTROL PANEL INDICATOR LIGHT STATUS

PROJECT:

MRP PROPERTIES COMPANY, LLC
ARKANSAS CITY, KANSAS

MWH

FIGURE No.:

7

APPENDICES

APPENDIX A
Recovery Well Completion Details

EnecoTech Inc.
1580 Lincoln Street, Suite 1000
Denver, Colorado 80203

Well Number:

RW-35

WELL CONSTRUCTION LOG

DATE DRILLED: **4/29/2003**	PROJECT NUMBER: **99-0138R-019**	DETECTOR: **PID OVM 580B**	CALIBRATED TO: **100 ppm Isobutylene**	BACKGROUND PID: **0 ppm**	
OWNER: **TPI PETROLEUM, INC.**	PROJECT NAME: **Arkansas City**	WELL TYPE: **Recovery Well**		NORTHING: **-594.96**	EASTING: **2032.12**
DRILLED BY: **Davis Environmental Drilling, L.L.C. State License # 607**	DRILLING METHOD: **Reverse Circulation**	SAMPLING METHOD: **Grab**	HOLE DIAMETER: **20"**	TOTAL WELL DEPTH: **43.44' BGS**	DEPTH TO LIQUID: **23.74' TOC**
LOGGED BY: **Scott Dixon, EnecoTech**	SEAL: **Gold Seal medium bentonite chips**	GRAVEL PACK: **8-12 mesh silica sand, 26.0 ft - 39.5 ft; Ritchie sand 6.5 ft -26.0 ft & 39.5 ft - 43.5 ft**	CEMENT: **0.0 ft - 4.0 ft**	DEPTH TO WATER: **24.21' TOC**	DATE MEASURED: **5/9/2003**
CASING TYPE: **Sch. 80 PVC**	DIAMETER: **12"**	LENGTH: **14.44' & 4'**	TOC ELEVATION: **1063.18**	GROUND ELEVATION: **1060.17**	CASING STICKUP **3.0'**
SCREEN TYPE: **Johnson Stainless Steel Wire Wrap**	SLOT: **0.040 inch**	DIAMETER: **12"**	LENGTH: **28'**	DEPTH TO TOP OF SCREEN: **11.44' BGS**	

USCS CLASSIFICATION	PID READING (PPM)	DEPTH (FT BGS)	LITHOLOGY/REMARKS (The stratification lines on the borehole log represent the approximate boundary between soil and rock types. The transition between these boundaries may be more gradual than shown on this log.)
SC	0	0	0.0'-4.0' Dk. Brown sandy sl. clayey loam, top soil
SP	35		4.0'-12.0' Tan-Brown fine-med. gr. sand, strong odor
		10	
CL			12.0'-13.0' Gray soft, sticky clay
SC			13.0'-19.0' Gray med-coarse gr. sandy clay with well rounded gravel up to 1/2"
CL		20	19.0'-20.0' Gray v. plastic, sticky clay
GW			20.0'-31.0' Various colored coarse sand with cobbles
		30	
CL			31.0'-34.0' Rusty-Tan mod. pl. sticky clay
GM			34.0'-39.5' Various colored gravel up to 1" and cobbles
		40	
CL			39.5'-40.0' Gray clay and soft shale
SH			40.0'-46.0' Gray hard shale bedrock
		50	

End of boring 46' BGS.

Sand Pack | Grout | D = Dry | M = Moist
Bentonite Chips | Cement | DP = Damp | SAT = Saturated

WELL COMPLETION

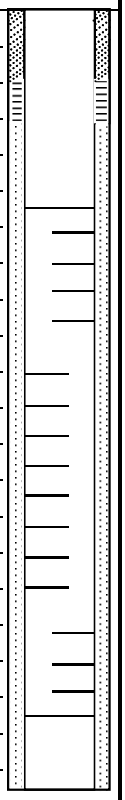

WELL CONSTRUCTION DIAGRAM

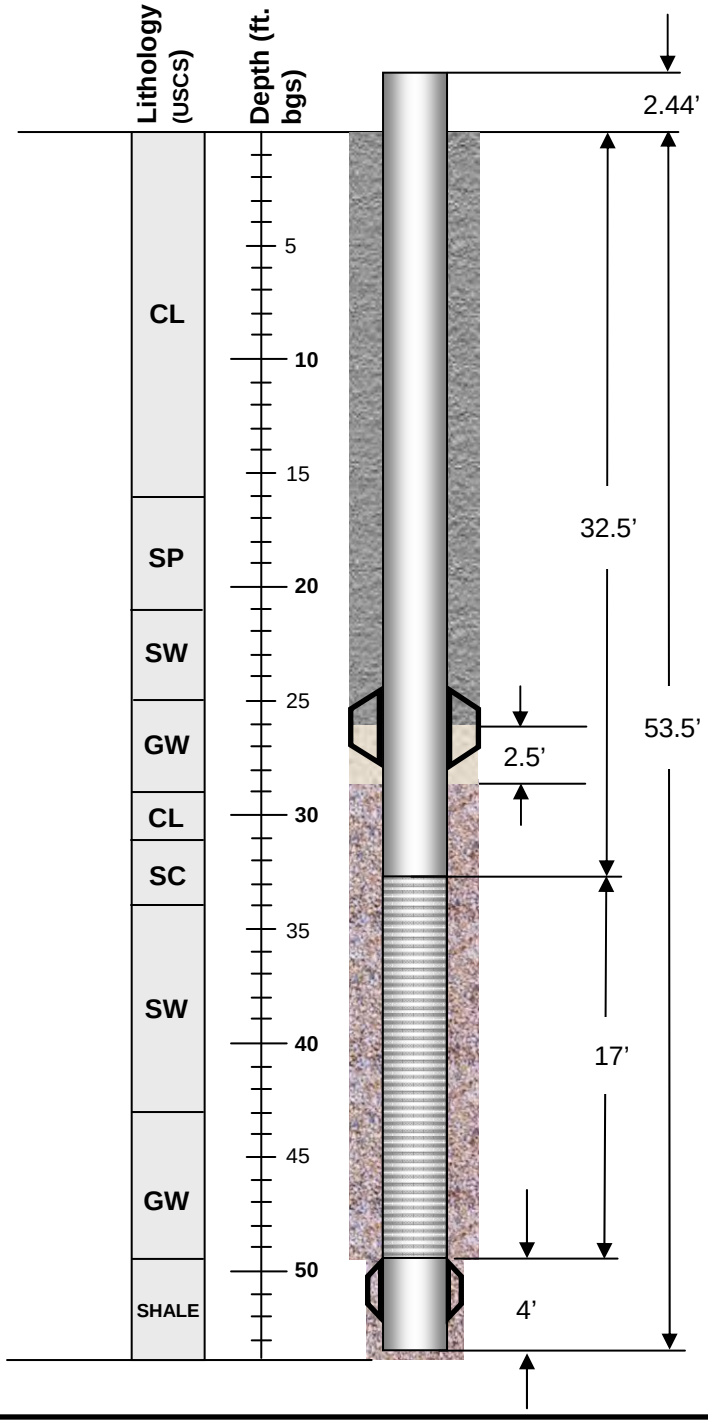

BOREHOLE:
Diameter: 24" (0-49.5'), 16" (49.5-54')

SURFACE SEAL:
Material: Cement Grout
Length: 26' (0-26')

BENTONITE SEAL:
Material: Bentonite Chips
Length: 2.5' (26-28.5')

FILTER PACK:
Material: 3-12 Silica Sand
Length: 25' (28.5-53.5')

WELL CASING:
Material: Certa-lok™ Sch. 40 PVC 12" Dia.
Length: 32.5' bgs

WELL SCREEN:
Material: Stainless Steel 12" Dia. 40 Slot
Length: 17' (32.5-49.5')

BOTTOM SUMP:
Material: Stainless Steel 12 " Dia.
Length: 4' (49.5-53.5')

STATIC WATER LEVEL: 31.8' (3/12/07) **ft bgs**

DATE STARTED: 3/8/07 **FINISH:** 3/12/07

LOGGED BY: Jason Garnsey

DRILLING CONTRACTOR: Layne Western

DRILLER: Kevin Holub

DRILLING METHOD: Reverse Circulation

DRILLING FLUID: Water

WELL DEVELOPMENT METHOD:
Bail, swab, overpump

SURVEY (site coordinates):

Top of Casing Elevation: 1071.34 **ft amsl**

Ground Surface Elevation: 1068.9 **ft amsl**

Northing: -749.309 **Easting:** 2076.840

EXPLANATION

The stratification lines on the borehole log represent the approximate boundary between soil and rock types. The transition between these boundaries may be more gradual than depicted on this log.

WELL CONSTRUCTION

- Cement Grout (surface seal)
- Bentonite Seal
- Filter Pack
- Well Screen
- Well Casing
- Casing Centralizer

LITHOLOGY

GW	Well-graded gravels, gravel-sand mixtures, little or no fines
SW	Well-graded sands, gravelly sands, little or no fines
SP	Poorly graded sands, gravelly sands, little or no fines
SC	Clayey sands, sand-clay mixtures
CL	Inorganic clays of low to med. plasticity, gravelly clays, sandy clays, silty clays, lean clays
SHALE	Shale Bedrock

RECOVERY WELL RW-40 CONSTRUCTION DIAGRAM

PROJECT:
MICHIGAN REUTILIZATION, LLC
ARKANSAS CITY, KANSAS

MWH

Figure No.:

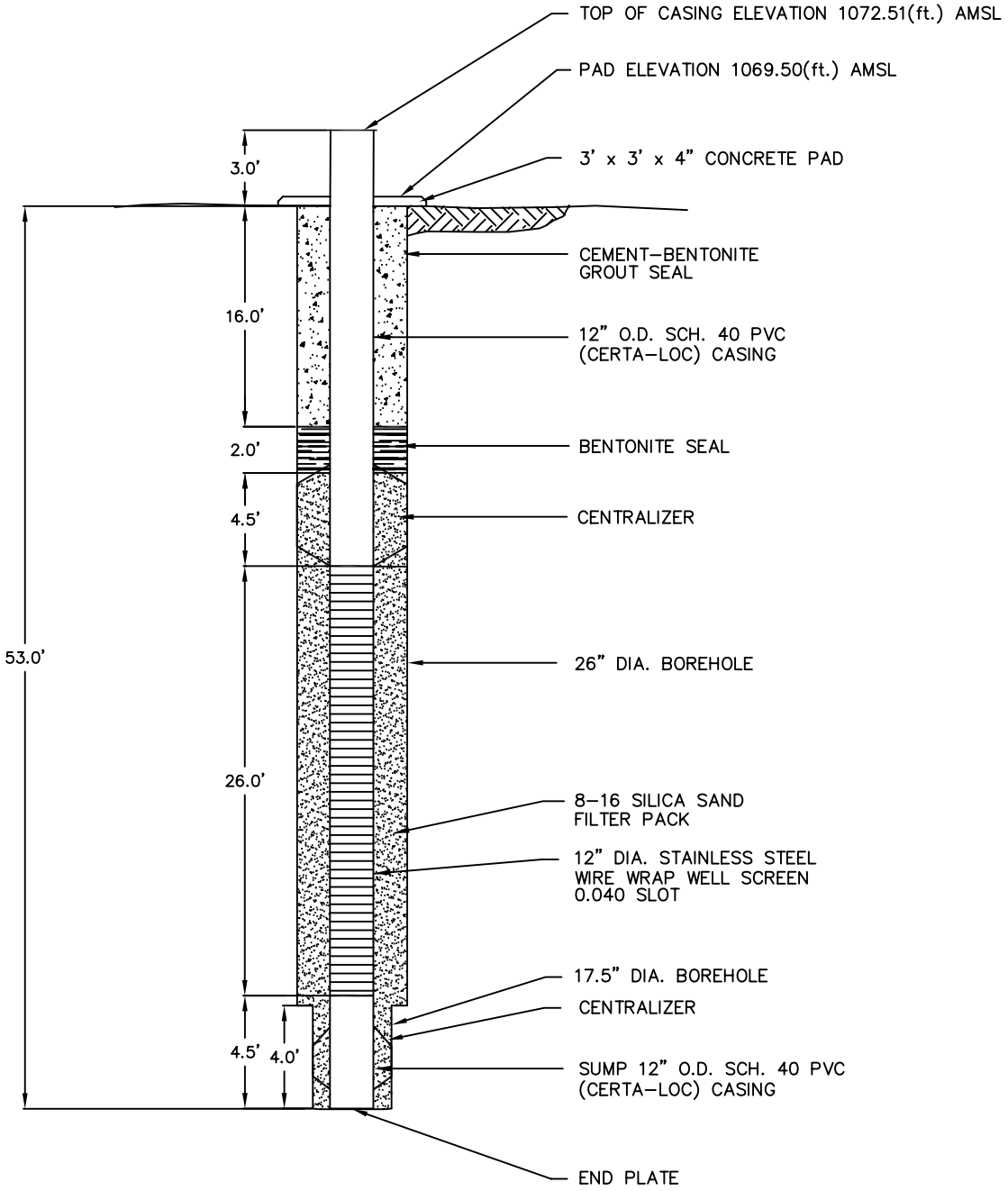

BUILT BY: LAYNE-WESTERN
DATE COMPLETED: 11/15/01

SECTION
NOT TO SCALE

LOCATION (Plant Coordinates)

NORTHING -791.301(ft.)
EASTING 2202.016(ft.)

ELEVATIONS IN FEET ABOVE MEAN SEA LEVEL (AMSL)

EnecoTech
ENVIRONMENTAL CONSULTANTS

Figure No.:

RECOVERY WELL RW-45
CONSTRUCTION DIAGRAM

PROJECT: TPI PETROLEUM INC. - ARKANSAS CITY REFINERY

138R-017	DESIGNED BY: JFM	APPROVED BY: JFM	
18-45_OM	DRAWN BY: LKB	DATE: 1/17/02	REV:

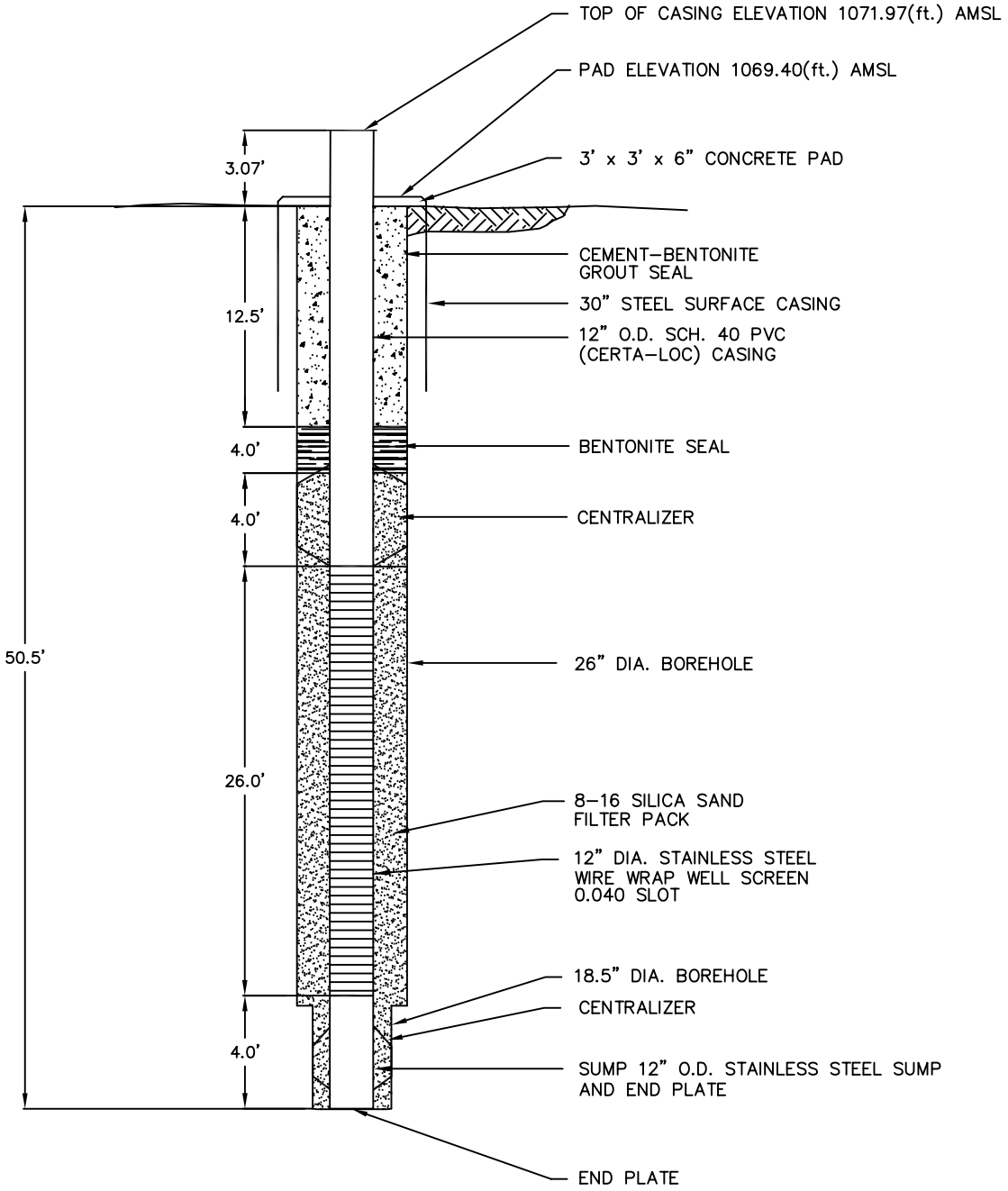

BUILT BY: LAYNE-WESTERN
DATE COMPLETED: 9/1/04

SECTION
NOT TO SCALE

LOCATION (Plant Coordinates)

NORTHING -834.49(ft.)
EASTING 2248.23(ft.)

ELEVATIONS IN FEET ABOVE MEAN SEA LEVEL (AMSL)

MWH

Figure No.:

RECOVERY WELL RW-50
CONSTRUCTION DIAGRAM

PROJECT: TPI PETROLEUM INC. - ARKANSAS CITY REFINERY

4270169	DESIGNED BY: JFM	APPROVED BY: JFM	
RW-50_101904	DRAWN BY: LKB	DATE: 9/30/04	REV:

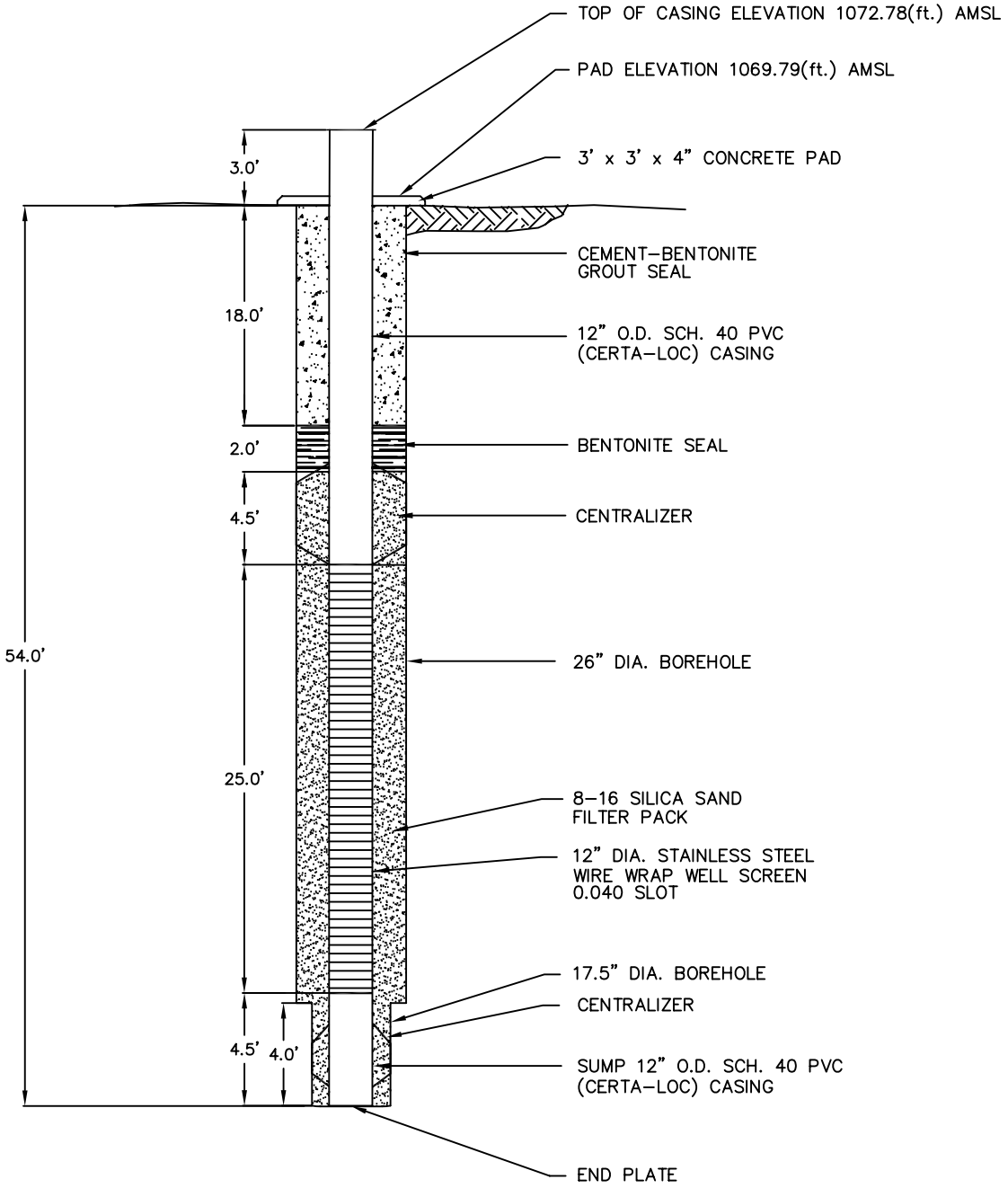

BUILT BY: LAYNE-WESTERN
DATE COMPLETED: 11/17/01

SECTION
NOT TO SCALE

LOCATION (Plant Coordinates)

NORTHING -936.245(ft.)
EASTING 2326.545(ft.)

ELEVATIONS IN FEET ABOVE MEAN SEA LEVEL (AMSL)

EnecoTech
ENVIRONMENTAL CONSULTANTS

Figure No.:

RECOVERY WELL RW-55
CONSTRUCTION DIAGRAM

PROJECT: TPI PETROLEUM INC. - ARKANSAS CITY REFINERY

138R-017	DESIGNED BY: JFM	APPROVED BY: JFM	
18-55_OM	DRAWN BY: LKB	DATE: 1/17/02	REV:

WELL CONSTRUCTION DIAGRAM

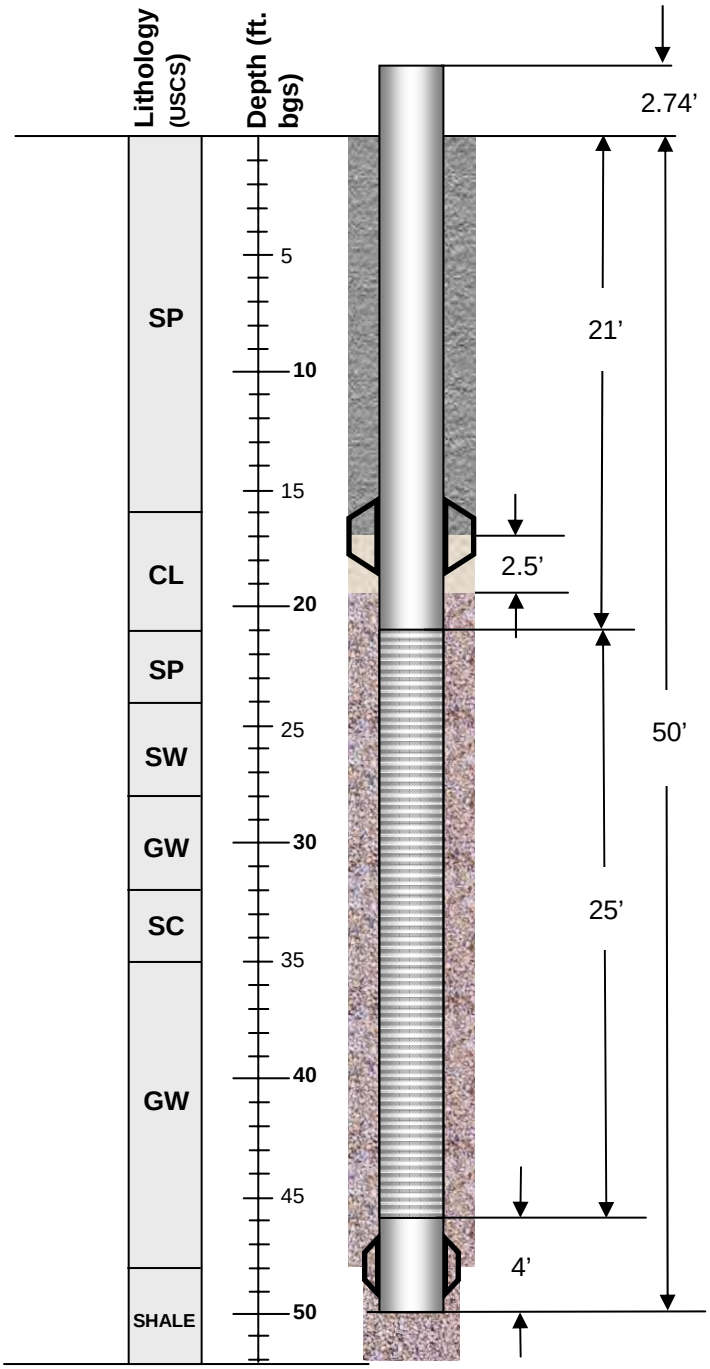

BOREHOLE:
Diameter: 24" (0-46'), 16" (46-52')

SURFACE SEAL:
Material: Cement Grout
Length: 17' (0-17')

BENTONITE SEAL:
Material: Bentonite Chips
Length: 2.5' (17-19.5')

FILTER PACK:
Material: 3-12 Silica Sand
Length: 30.5' (19.5-50')

WELL CASING:
Material: Certa-lok™ Sch. 40 PVC 12" Dia.
Length: 21' bgs

WELL SCREEN:
Material: Stainless Steel 12" Dia. 50 Slot
Length: 25' (21-46')

BOTTOM SUMP:
Material: Stainless Steel 12 " Dia.
Length: 4' (46-50')

STATIC WATER LEVEL: 30.5 (3/2/07) **ft bgs**

DATE STARTED: 2/22/07 **FINISH:** 3/5/07

LOGGED BY: Jason Garnsey

DRILLING CONTRACTOR: Layne Western

DRILLER: Kevin Holub

DRILLING METHOD: Reverse Circulation

DRILLING FLUID: Water

WELL DEVELOPMENT METHOD:
Bail, swab, overpump

SURVEY (site coordinates):

Top of Casing Elevation: 1072.01 **ft amsl**

Ground Surface Elevation: 1069.27 **ft amsl**

Northing: -1019.172 **Easting:** 2403.951

EXPLANATION

The stratification lines on the borehole log represent the approximate boundary between soil and rock types. The transition between these boundaries may be more gradual than depicted on this log.

WELL CONSTRUCTION

- Cement Grout (surface seal)
- Bentonite Seal
- Filter Pack
- Well Screen
- Well Casing
- Casing Centralizer

LITHOLOGY

GW	Well-graded gravels, gravel-sand mixtures, little or no fines
SW	Well-graded sands, gravelly sands, little or no fines
SP	Poorly graded sands, gravelly sands, little or no fines
SC	Clayey sands, sand-clay mixtures
CL	Inorganic clays of low to med. plasticity, gravelly clays, sandy clays, silty clays, lean clays
SHALE	Shale Bedrock

RECOVERY WELL RW-60 CONSTRUCTION DIAGRAM

PROJECT:
MICHIGAN REUTILIZATION, LLC
ARKANSAS CITY, KANSAS

MWH

Figure No.:

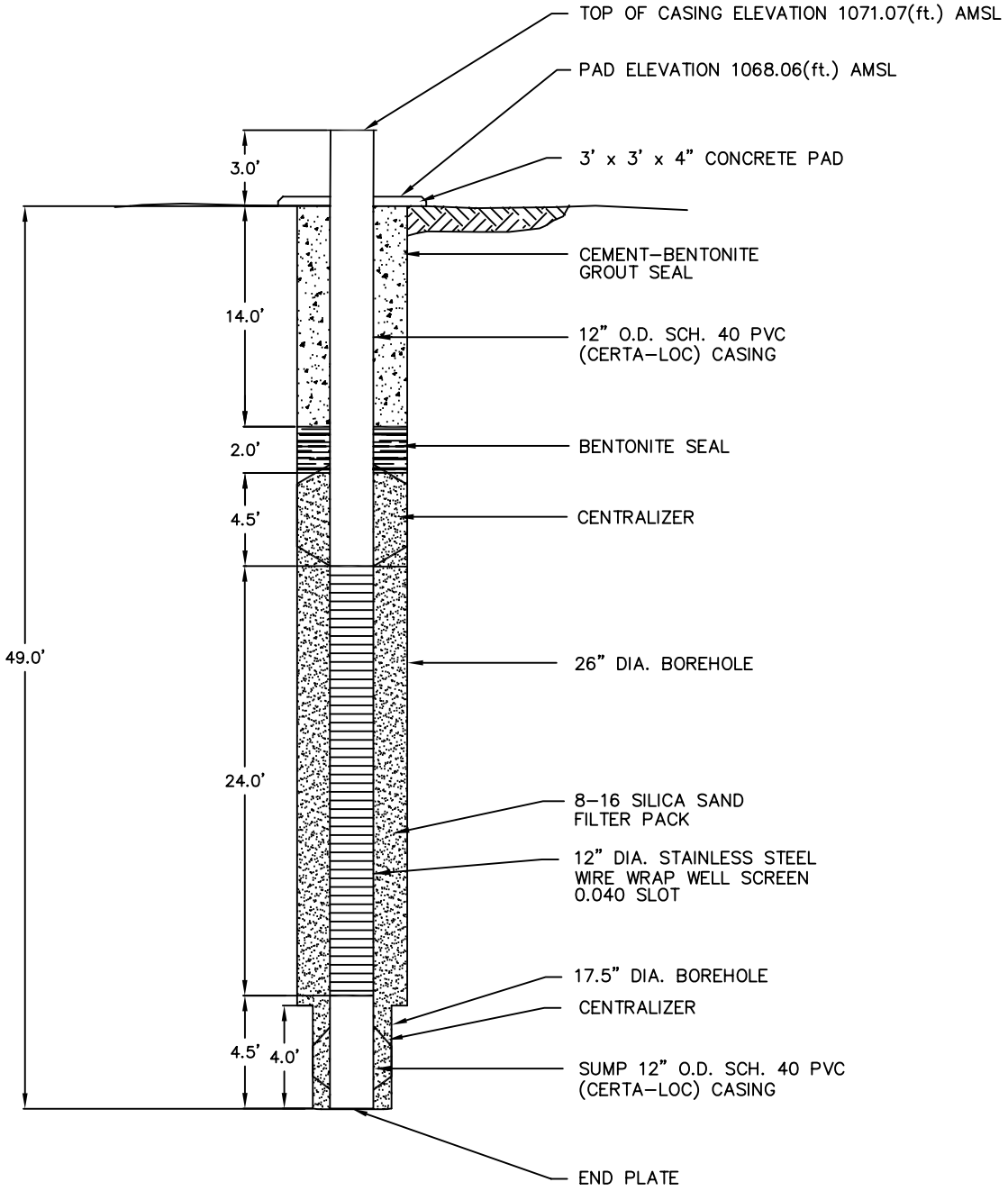

BUILT BY: LAYNE–WESTERN
DATE COMPLETED: 11/19/01

SECTION
NOT TO SCALE

LOCATION (Plant Coordinates)

NORTHING –1109.292(ft.)
EASTING 2493.427(ft.)

ELEVATIONS IN FEET ABOVE MEAN SEA LEVEL (AMSL)

EnecoTech
ENVIRONMENTAL CONSULTANTS

Figure No.:

RECOVERY WELL RW–65
CONSTRUCTION DIAGRAM

PROJECT: TPI PETROLEUM INC. – ARKANSAS CITY REFINERY

138R–017	DESIGNED BY: JFM	APPROVED BY: JFM	
18–65_OM	DRAWN BY: LKB	DATE: 1/17/02	REV:

WELL CONSTRUCTION DIAGRAM

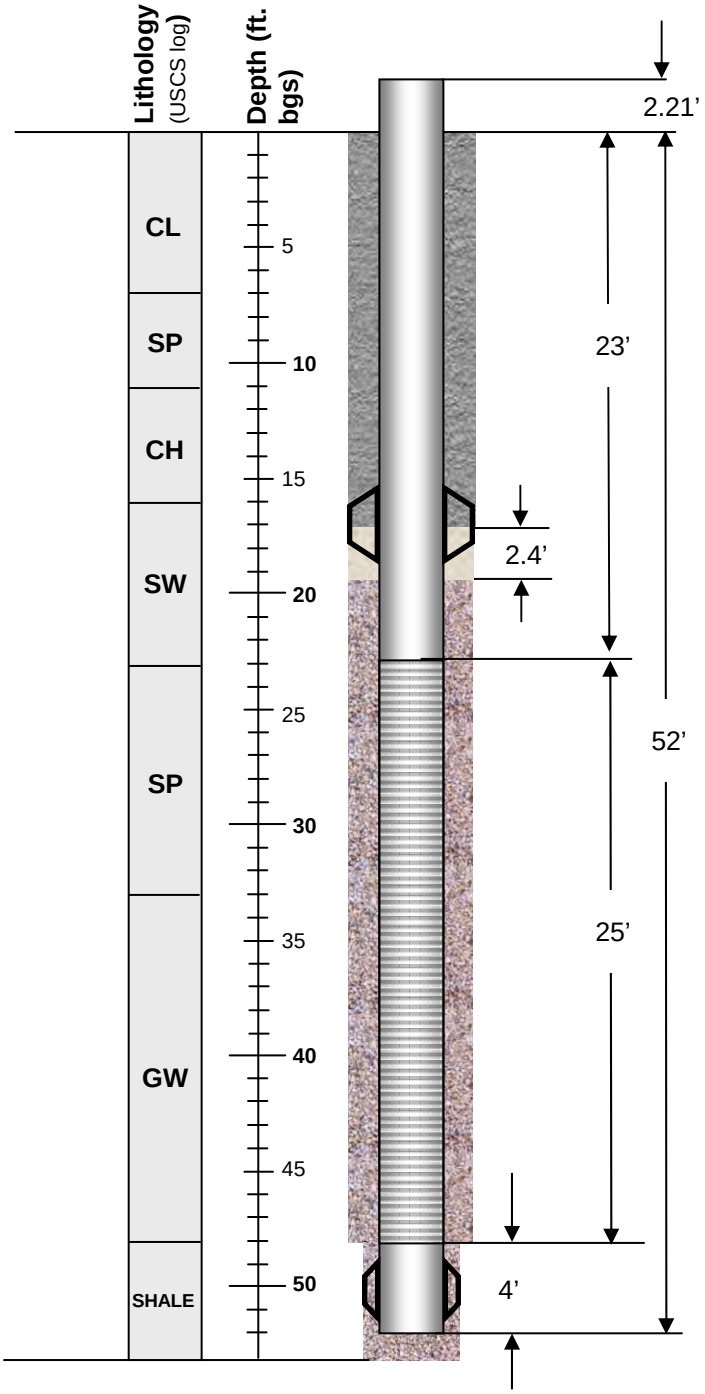

BOREHOLE:
Diameter: 24" (0-48'), 16" (48-55.5')

SURFACE SEAL:
Material: Cement Grout
Length: 17' (0-17')

BENTONITE SEAL:
Material: Bentonite Chips
Length: 2.4' (17-19.4')

FILTER PACK:
Material: 3-12 Silica Sand
Length: 32.6' (19.4-52')

WELL CASING:
Material: Certa-lok™ Sch. 40 PVC 12" Dia.
Length: 23' bgs

WELL SCREEN:
Material: Stainless Steel 12" Dia. 40 Slot
Length: 25' (23-48')

BOTTOM SUMP:
Material: Stainless Steel 12 " Dia.
Length: 4' (48-52')

STATIC WATER LEVEL: 29.15 (3/3/07) **ft bgs**

DATE STARTED: 3/2/07 **FINISH:** 3/6/07

LOGGED BY: Jason Garnsey

DRILLING CONTRACTOR: Layne Western

DRILLER: Kevin Holub

DRILLING METHOD: Reverse Circulation

DRILLING FLUID: Water

WELL DEVELOPMENT METHOD:
Bail, swab, overpump

SURVEY (site coordinates):

Top of Casing Elevation: 1071.52 **ft amsl**

Ground Surface Elevation: 1069.31 **ft amsl**

Northing: -1144.458 **Easting:** 2652.055

EXPLANATION

The stratification lines on the borehole log represent the approximate boundary between soil and rock types. The transition between these boundaries may be more gradual than depicted on this log.

WELL CONSTRUCTION

- Cement Grout (surface seal)
- Bentonite Seal
- Filter Pack
- Well Screen
- Well Casing
- Casing Centralizer

LITHOLOGY

GW	Well-graded gravels, gravel-sand mixtures, little or no fines
SW	Well-graded sands, gravelly sands, little or no fines
SP	Poorly graded sands, gravelly sands, little or no fines
SC	Clayey sands, sand-clay mixtures
CL	Inorganic clays of low to med. plasticity, gravelly clays, sandy clays, silty clays, lean clays
SHALE	Shale Bedrock

RECOVERY WELL RW-70 CONSTRUCTION DIAGRAM

PROJECT:
MICHIGAN REUTILIZATION, LLC
ARKANSAS CITY, KANSAS

MWH

Figure No.:

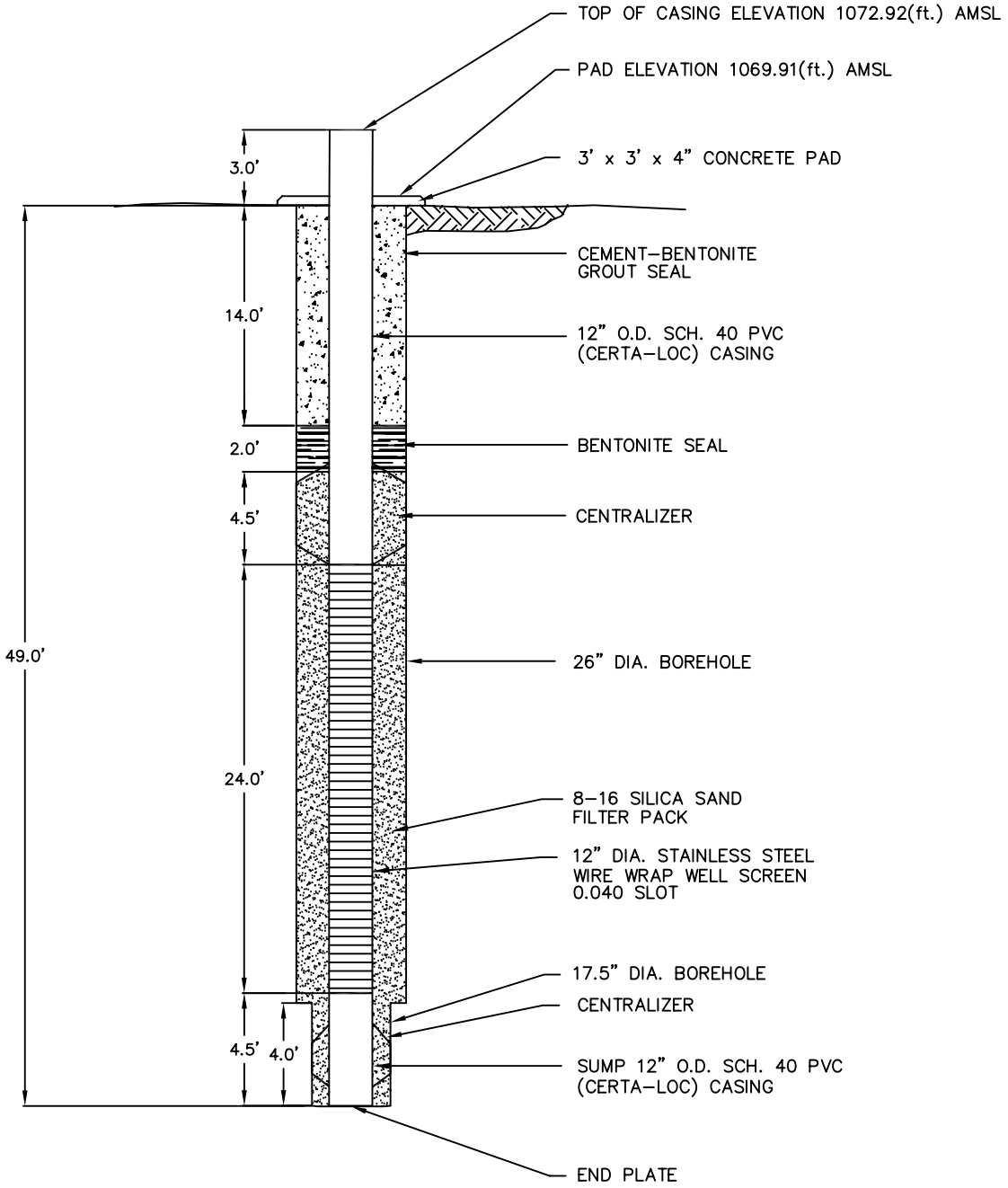

BUILT BY: LAYNE-WESTERN
DATE COMPLETED: 11/20/01

SECTION
NOT TO SCALE

LOCATION (Plant Coordinates)

NORTHING -1237.323(ft.)
EASTING 2758.073(ft.)

ELEVATIONS IN FEET ABOVE MEAN SEA LEVEL (AMSL)

EnecoTech
ENVIRONMENTAL CONSULTANTS

Figure No.:

RECOVERY WELL RW-75
CONSTRUCTION DIAGRAM

PROJECT: TPI PETROLEUM INC. - ARKANSAS CITY REFINERY

138R-017	DESIGNED BY: JFM	APPROVED BY: JFM	
18-75_OM	DRAWN BY: LKB	DATE: 1/17/02	REV:

APPENDIX B
Submersible Pump & Motor Technical Data

Installation and Operating Instructions

Stainless Steel Submersible Pumps

GRUNDFOS

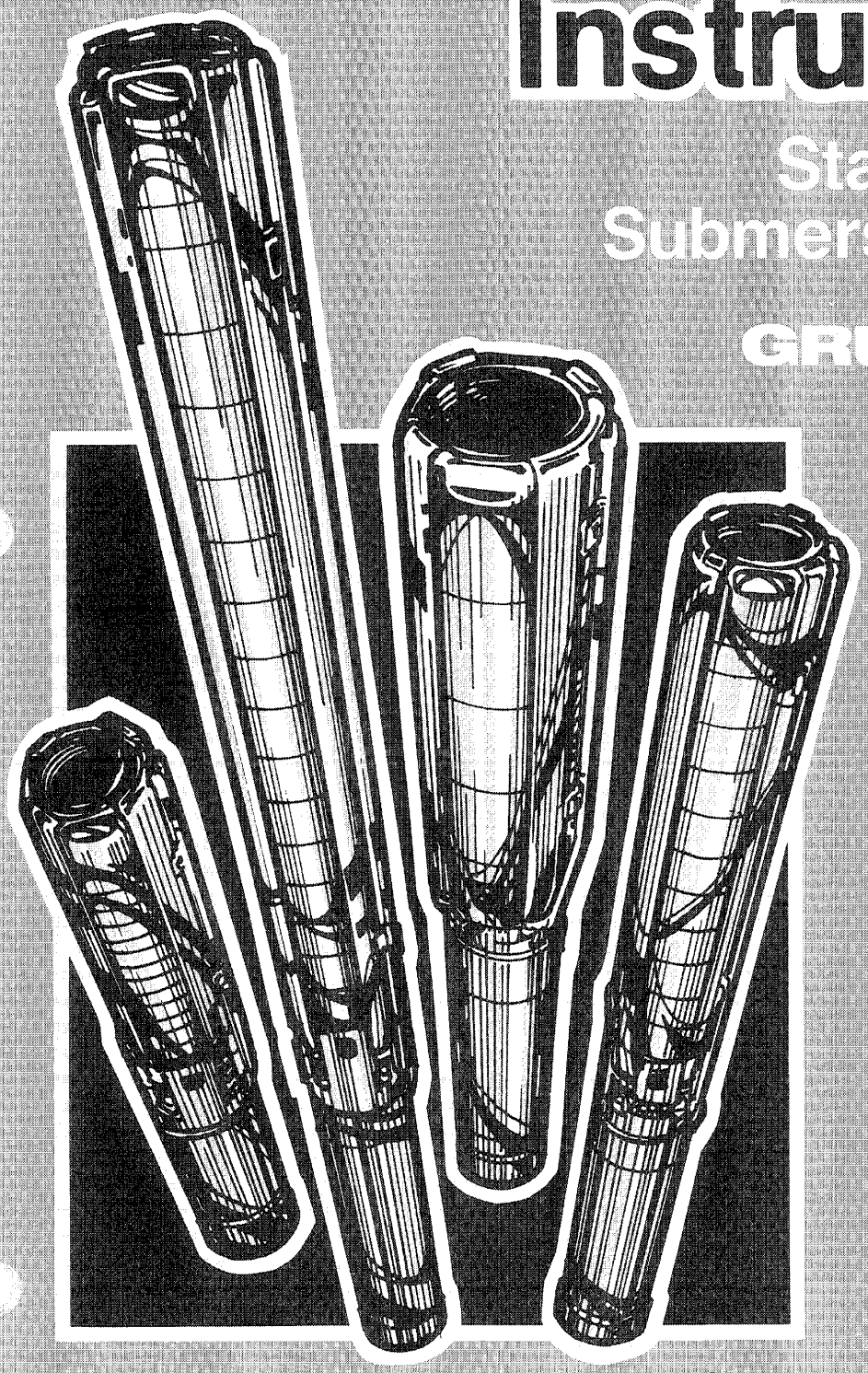

1 Shipment Inspection ■ Page 1

2 Pre-Installation Checklist ■ Page 1

3 Wire Cable Type ■ Page 2

4 Splicing the Motor Cable ■ Page 2

5 Installation ■ Page 3

6 Electrical ■ Page 4

7 Start-up ■ Page 6

8 Trouble-shooting ■ Page 7

9 Technical Data ■ Page 10

Please leave these instructions with the pump

Installation and Operating Instructions

TABLE OF CONTENTS

SECTION 1
Shipment Inspection . . . . . Page 1

SECTION 2
Pre-Installation Checklist . . . . . Page 1

SECTION 3
Wire Cable Type . . . . . Page 2

SECTION 4
Splicing the Motor Cable . . . . . Page 2

SECTION 5
Installation . . . . . Page 3

SECTION 6
Electrical . . . . . Page 4
- Engine Driven Generators 4
- Control Box / Panel Wiring 4
- High Voltage Surge Arresters 5
- Control Box / Panel Grounding 5
- Wiring Checks and Installation 5

SECTION 7
Start-Up . . . . . Page 6
- Three-Phase Motors 6
- Developing the Well 6
- Operation 7

SECTION 8
Troubleshooting . . . . . Page 7
- Preliminary Tests 7
- Troubleshooting Chart 8

SECTION 9
Technical Data . . . . . Page 10

Installation and Operation Instructions

GRUNDFOS STAINLESS STEEL SUBMERSIBLE PUMPS

Your Grundfos Submersible Pump is of the utmost quality. Combined with proper installation, your Grundfos pump will give you many years of reliable service.

To ensure the proper installation of the pump, carefully read the complete manual before attempting to install the pump.

SECTION 1.

Shipment Inspection

Examine the components carefully to make sure no damage has occurred to the pump-end, motor, cable or control box during shipment.

This Grundfos Submersible Pump should remain in its shipping carton until it is ready to be installed. The carton is specially designed to protect it from damage. During unpacking and prior to installation, **make sure that the pump is not dropped or mishandled.**

The motor is equipped with an electrical cable. **Under no circumstance should the cable be used to support the weight of the pump.**

You will find a loose data plate wired to the pump. It should be securely mounted at the well or attached to the control box.

SECTION 2.

Pre-Installation Checklist

Before beginning installation, the following checks should be made. They are all critical for the proper installation of this submersible pump.

☑ A. CONDITION OF THE WELL

If the pump is to be installed in a new well, the well should be fully developed and bailed or blown free of cuttings and sand. The stainless steel construction of the Grundfos submersible make it resistant to abrasion; however, no pump, made of any material, can forever withstand the destructive wear that occurs when constantly pumping sandy water.

If this pump is used to replace an oil-filled submersible or oil-lubricated line-shaft turbine in an existing well, **the well must be blown or bailed clear of oil.**

Determine the maximum depth of the well, and the draw-down level at the pump's maximum capacity. Pump selection and setting depth should be based on this data.

The inside diameter of the well casing should be checked to ensure that it is not smaller than the size of the pump and motor.

☑ B. CONDITION OF THE WATER

Submersible pumps are designed for pumping clear and cold water that is free of air and gases. Decreased pump performance and life expectancy can occur if the water is not cold and clear or contains air and gases.

Maximum water temperature should not exceed 102°F. Special consideration must be given to the pump and motor if it is to be used to pump water above 102°F.

The Grundfos stainless steel submersible is highly resistant to the normal corrosive environment found in some water wells. If water well tests determine the water has an excessive or unusual corrosive quality, or exceeds 102°F, contact your Grundfos representative for information concerning specially designed pumps for these applications.

☑ C. INSTALLATION DEPTH

A check should be made to ensure that the installation depth of the pump will always be at least three feet below the maximum draw-down level of the well. For flow rates exceeding 100 gpm, the NPSH may have to be considered. Refer to NPSH curves in the technical brochure.

The bottom of the motor should never be installed lower than the top of the well screen or within five feet of the well bottom.

If the pump is to be installed in a lake, pond, tank or large diameter well, the water velocity passing over the motor must be sufficient to ensure proper motor cooling. The minimum recommended water flow rates which ensure proper cooling are listed in Table A.

☑ D. ELECTRICAL SUPPLY

The motor voltage, phase and frequency indicated on the motor nameplate should be checked against the actual electrical supply.

SECTION 3.

Wire Cable Type

The wire cable used between the pump and control box or panel should be approved for submersible pump applications. The conductor may be solid or stranded. The cable may consist of individually insulated conductors twisted together, insulated conductors molded side by side in one flat cable or insulated conductors with a round overall jacket.

The conductor insulation should be type RW, RUW, TW, TWU or equivalent and must be suitable for use with submersible pumps. An equivalent Canadian Standards Association certified wire may also be used. See Table D for recommended sizes of cable lengths.

SECTION 4.

Splicing the Motor Cable

A good cable splice is critical to proper operation of the submersible pump and must be done with extreme care.

If the splice is carefully made, it will work as well as any other portion of the cable, and will be completely watertight.

Grundfos recommends using a heat shrink splice kit. The splice should be made in accordance with the kit manufacture's instructions. Typically a heat shrink splice can be made as follows:

1. Examine the motor cable and the drop cable carefully for damage.

2. Cut the motor leads off in a staggered manner. Cut the ends of the drop cable so that the ends match up with the motor leads (See Figure 4-A). On single-phase motors, **be sure to match the colors.**

3. Strip back and trim off ½ inch of insulation from each lead, making sure to scrape the wire bare to obtain a good connection. Be careful not to damage the copper conductor when stripping off the insulation.

4. Slide the heat shrink tubing on to each lead. Insert a properly sized "Sta-kon" type connector on each lead, making sure that lead colors are matched. Using a "Sta-kon" crimping pliers, indent the lugs (Figure 4-B). Be sure to squeeze hard on the pliers, particularly when using large cable.

5. Center the heat shrink tubing over the connector. Using a propane torch, lighter, or electric heat gun, uniformly heat the tubing starting first in the center working toward the ends (Figure 4-C).

6. Continue to apply the heat to the tubing using care not to let the flame directly contact the tubing. When the tubing shrinks and the sealant flows from the ends of the tubing, the splice is complete (Figure 4-D).

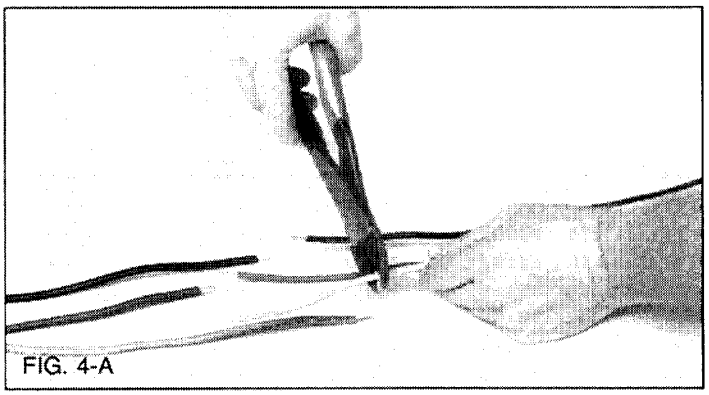

FIG. 4-A

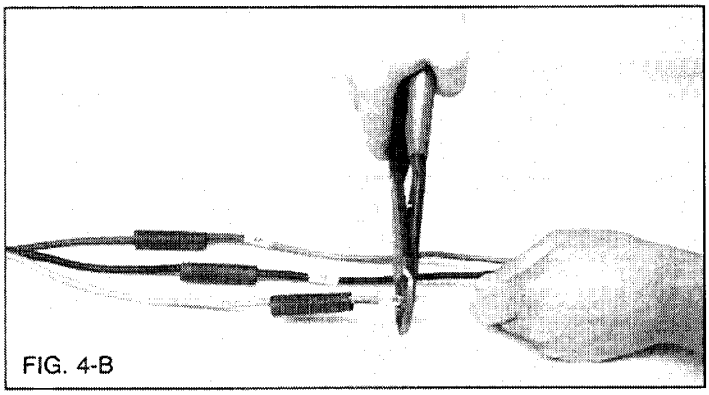

FIG. 4-B

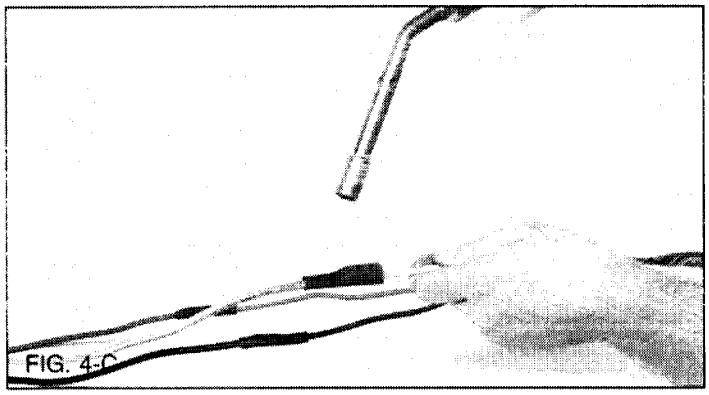

FIG. 4-C

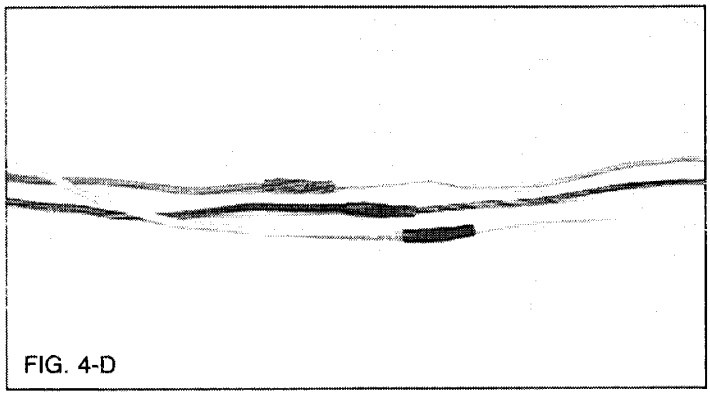

FIG. 4-D

SECTION 5.

Installation

The riser pipe or hose should be properly sized and selected based on estimated flow rates and friction-loss factors.

A back-up wrench should be used when the riser pipe is attached to the pump. The pump should be gripped only by the flats on the top of the discharge chamber. **The body of the pump, cable guard or motor should not be gripped under any circumstance.**

If Steel Riser Pipe is Used:

We recommend that steel riser pipes always be used with the larger submersibles. An approved pipe thread compound should be used on all joints. Make sure the joints are adequately tightened in order to resist the tendency of the motor to loosen the joints when stopping and starting.

When tightened, the first section of the riser pipe must not come in contact with the check valve retainer in the discharge chamber of the pump.

After the first section of the riser pipe has been attached to the pump, the lifting cable or elevator should be clamped to the pipe. **Do not clamp the pump.** When raising the pump and riser section, be careful not to place bending stress on the pump by picking it up by the pump-end only.

Make sure that the electrical cables are not cut or damaged in any way when the pump is being lowered in the well.

The drop cable should be secured to the riser pipe at frequent intervals to prevent sagging, looping or possible cable damage. Nylon cable clips or waterproof tape may be used. The cable splice should be protected by securing it with clips or tape just above and below the splice.

If Plastic or Flexible Riser Pipe is Used:

It is recommended that plastic type riser pipe be used **only** with the smaller domestic submersibles. The pipe manufacturer or representative should be contacted to insure the pipe type and physical characteristics are suitable for this use. Use the correct joint compound recommended by the pipe manufacturer. In addition to making sure that joints are securely fastened, the use of a torque arrester is recommended when using plastic pipe.

Do not connect the first plastic or flexible riser section directly to the pump. Always attach a metallic nipple or adapter into the discharge chamber of the pump. When tightened, the threaded end of the nipple or adapter must not come in contact with the check valve retainer in the discharge chamber of the pump.

The drop cable should be secured to the riser pipe at frequent intervals to prevent sagging, looping and possible cable damage. Nylon cable clips or waterproof tape may be used. The cable splice should be protected by securing it with clips or tape just above each joint.

IMPORTANT- Plastic and flexible pipe tend to stretch under load. This stretching must be taken into account when securing the cable to the riser pipe. Leave 3 to 4 inches of slack between clips or taped points to allow for this stretching. This tendency for plastic and flexible pipe to stretch will also affect the calculation of the pump setting depth. As a general rule, you can estimate that plastic pipe will stretch to approximately 2% of its length. For example, if you installed 200 feet of plastic riser pipe, the pump may actually be down 204 feet. If the depth setting is critical, check with the manufacturer of the pipe to determine how to compensate for pipe stretch.

When plastic riser pipe is used, it is recommended that a safety cable be attached to the pump to lower and raise it. The discharge piece of a Grundfos 4 inch submersible is designed to accommodate this cable (Figure 5-A).

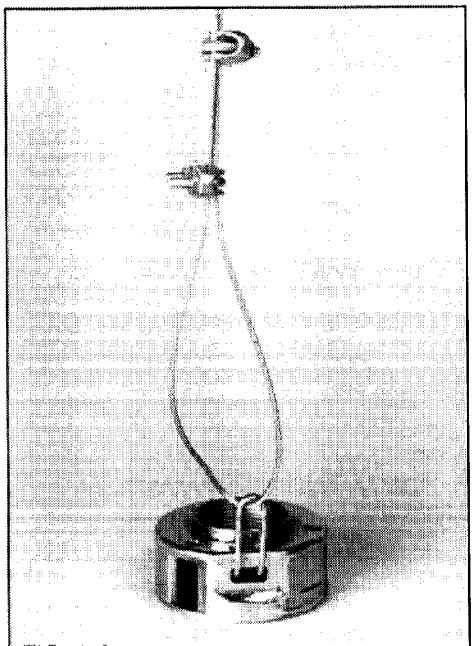

FIG. 5-A

Check valves:

A check valve should always be installed at the surface of the well. In addition, for installations deeper than 200 feet, check valves should be installed at no more than 200 foot intervals.

Protect the well from contamination:

To protect against surface water entering the well and contaminating the water source, the well should be finished off above grade, and a locally approved well seal or pitless adapter unit utilized.

SECTION 6.

Electrical

WARNING: To reduce the risk of electric shock during operation of this pump requires the provision of acceptable grounding. If the means of connection to the supply connected box is other than grounded metal conduit, ground the pump back to the service by connecting a copper conductor, at least the size of the circuit supplying the pump, to the grounding screw provided within the wiring compartment.

All electrical work should be performed by a qualified electrician in accordance with the latest edition of the National Electrical Code, local codes and regulations.

Verification of the electrical supply should be made to ensure the voltage, phase and frequency match that of the motor. Motor voltage, phase, frequency and full-load current information can be found on the nameplate attached to the motor. Motor electrical data can be found in Table E.

If voltage variations are larger than ± 10%, do not operate the pump.

Direct on-line starting is used due to the extremely fast run-up time of the motor (0.1 second maximum), and the low moment of inertia of the pump and motor. Direct on-line starting current (locked rotor amp) is between 4 and 6.5 times the full-load current. If direct on-line starting is not acceptable and reduced starting current is required, an auto-transformer or resistant starters should be used for 5 to 30 HP motors (depending on cable length). For motors over 30 HP, use auto-transformer starters.

Engine-Driven Generators

If the submersible pump is going to be operated using an engine driven generator, we suggest the manufacturer of the generator be contacted to ensure the proper generator is selected and used. See Table B for generator sizing guide.

If power is going to be supplied through transformers, Table C outlines the minimum KVA rating and capacity required for satisfactory pump operation.

Control Box/Panel Wiring

1. Single-Phase Motors:

Single-phase motors must be connected as indicated in the motor control box. A typical single-phase wiring diagram using a Grundfos control box is shown (Figure 6-A).

2. Three-Phase Motors:

Three-phase motors must be used with the proper size and type of motor starter to ensure the motor is protected against damage from low voltage, phase failure, current unbalance and overload current. A properly sized starter with ambient-compensated extra quick-trip overloads must be used to give the best possible motor winding protection. **Each of the three motor legs must be protected with overloads.** The thermal overloads must trip in less than 10 seconds at locked rotor (starting) current. For starter and overload protection guide, see Table H. A three-phase motor wiring diagram is illustrated below (See Figure 6-B).

Pumps should NEVER be started to check rotation unless the pump is totally submerged. Severe damage may be caused to the pump and motor if they are run dry.

Single-Phase Wiring Diagram for GRUNDFOS Control Boxes

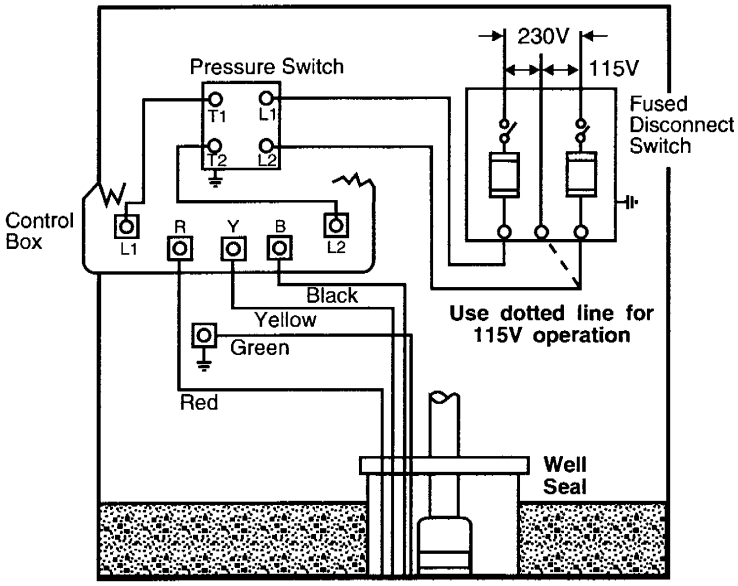

Figure 6-A

Three-Phase Wiring Diagram for GRUNDFOS and FRANKLIN Motors

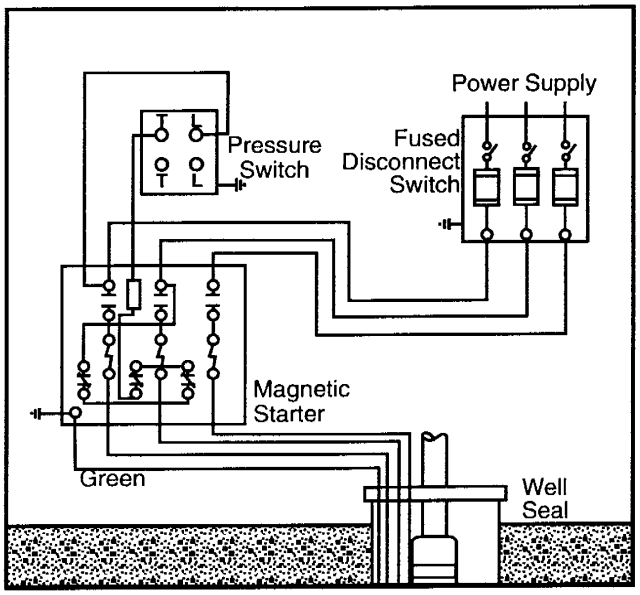

Figure 6-B

High Voltage Surge Arresters

A high voltage surge arrester should be used to protect the motor against lightning and switching surges. Lightning voltage surges in power lines are caused when lightning strikes somewhere in the area. Switching surges are caused by the opening and closing of switches on the main high-voltage distribution power lines.

The correct voltage-rated surge arrester should be installed on the supply (line) side of the control box (Figure 6-C and 6-D). **The arrester must be grounded in accordance with the National Electrical Code and local codes and regulations.**

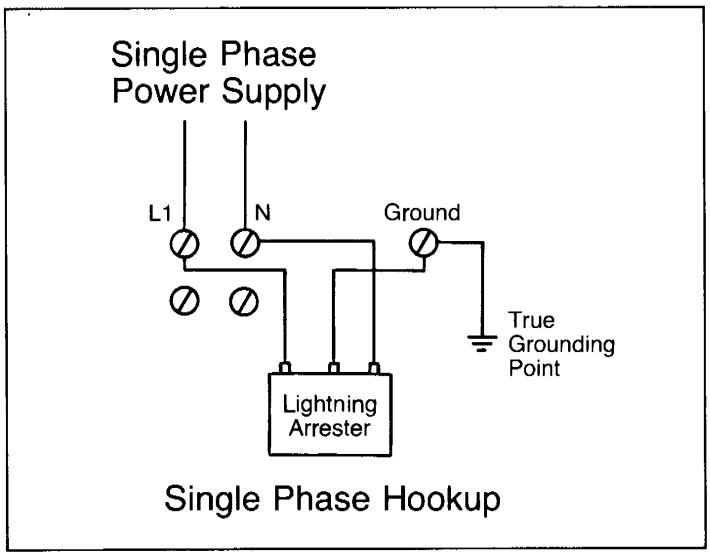

Figure 6-C

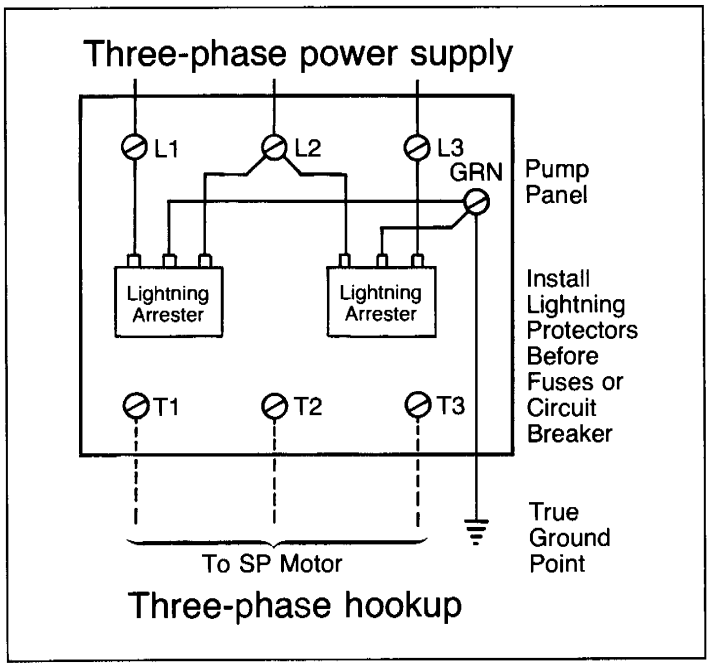

Figure 6-D

The warranty on all three-phase submersible motors is VOID if:

1. **The motor is operated with single-phase power through a phase converter.**
2. **Three-leg ambient compensated extra quick-trip overload protectors are not used.**
3. **Three-phase current unbalance is not checked and recorded. (See START-UP Section 7 for instructions.)**
4. **High voltage surge arresters are not installed.**

Control Box/Panel Grounding

The control box or panel shall be permanently grounded in accordance with the National Electrical Code and local codes or regulations. The ground wire should be a bare copper conductor at least the same size as the drop cable wire size. The ground wire should be run as short a distance as possible and be securely fastened to a true grounding point.

True grounding points are considered to be: a grounding rod driven into the water strata, steel well casing submerged into the water lower than the pump setting level, and steel discharge pipes without insulating couplings. If plastic discharge pipe and well casing are used or if a grounding wire is required by local codes, a properly sized bare copper wire should be connected to a stud on the motor and run to the control panel. Do not ground to a gas supply line. Connect the grounding wire to the ground point first and then to the terminal in the control box or panel.

Wiring Checks and Installation

Before making the final surface wiring connection of the drop cable to the control box or panel, it is a good practice to check the insulation resistance to ensure that the cable and splice are good. Measurements for a new installation must be at least 2,000,000 ohm. Do not start the pump if the measurement is less than this.

If it is higher than 2,000,000 ohm, the drop cable should then be run through the well seal by means of a conduit connector in such a way as to eliminate any possibility of foreign matter entering the well casing. Conduit should always be used from the pump to the control box or panel to protect the drop cable (See Figure 6-E). Finish wiring and verify that all electrical connections are made in accordance with the wiring diagram. Check to ensure the control box or panel and high voltage surge arrester have been grounded.

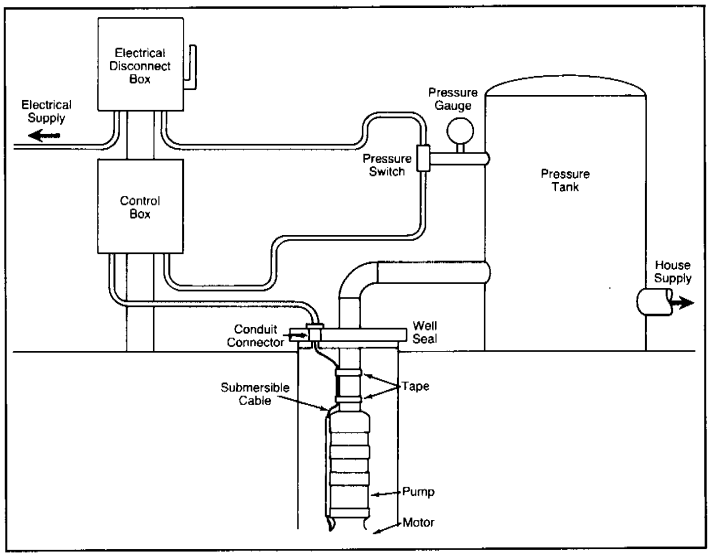

Figure 6-E

SECTION 7.

Start-Up

After the pump has been set into the well and the wiring connections have been made, the following procedures should be performed:

A. Attach a temporary horizontal length of pipe with installed gate valve to the riser pipe.

B. Adjust the gate valve one-third of the way open.

C. On three-phase units, check direction of rotation and current unbalance according to the instructions below. For single-phase units proceed directly to "Developing the Well".

D. Under no circumstances should the pump be operated for any prolonged period of time with the discharge valve closed. This can result in motor and pump damage due to overheating. A properly sized relief valve should be installed at the well head to prevent the pump from running against a closed valve.

Three-Phase Motors

1. Check the direction of rotation

Three-phase motors can run in either direction depending on how they are connected to the power supply. When the three cable leads are first connected to the power supply, there is a 50% chance that the motor will run in the proper direction. **To make sure the motor is running in the proper direction, carefully follow the procedures below:**

A. Start the pump and check the water quantity and pressure developed.

B. Stop the pump and interchange any two leads.

C. Start the pump and again check the water quantity and pressure.

D. Compare the results observed. The wire connection which gave the highest pressure and largest water quantity is the correct connection.

2. Check for current unbalance

Current unbalance causes the motor to have reduced starting torque, overload tripping, excessive vibration and poor performance which can result in early motor failure. It is very important that current unbalance be checked in all three-phase systems. **Current unbalance between the legs should not exceed 5% under normal operating conditions.**

The supply power service should be verfied to see if it is a two or three transformer system. If two transformers are present, the system is an "open" delta or wye. If three transformers are present, the system is true three-phase.

Make sure the transformer ratings in kilovolt amps (KVA) is sufficient for the motor load. See Table C.

The percentage of current unbalance can be calculated by using the following formulas and procedures:

$$\text{Average current} = \frac{\text{Total of current values measured on each leg}}{3}$$

$$\text{\% Current unbalance} = \frac{\text{Greatest amp difference from the average}}{\text{average current}} \times 100$$

To determine the percentage of current unbalance:

A. Measure and record current readings in amps for each leg (hookup 1). Disconnect power.

B. Shift or roll the motor leads from left to right so the drop cable lead that was on terminal 1 is now on 2, lead on 2 is now on 3, and lead on 3 is now on 1 (hookup 2). Rolling the motor leads in this manner will not reverse the motor rotation. Start the pump, measure and record current reading on each leg. Disconnect power.

C. Again shift drop cable leads from left to right so the lead on terminal 1 goes to 2, 2 to 3 and 3 to 1 (hookup 3). Start pump, measure and record current reading on each leg. Disconnect power.

D. Add the values for each hookup.

E. Divide the total by 3 to obtain the average.

F. Compare each single leg reading from the average to obtain the greatest amp difference from the average.

G. Divide this difference by the average to obtain the precentage of unbalance

Use the wiring hookup which provides the lowest percentage of unbalance. (See Table F for a specific example of correcting for three-phase power unbalance.)

Developing the Well

After proper rotation and current unbalance have been checked, start the pump and let it operate until the water runs clear of sand, silt and other impurities.

Slowly open the valve in small increments as the water clears until the desired flow rate is reached. Do not operate the pump beyond its maximum flow rating. **The pump should not be stopped until the water runs clear.**

If the water is clean and clear when the pump is first started, the valve should still be **slowly opened until the desired flow rate is reached.** As the valve is being opened, the drawdown should be checked to ensure the pump is always submerged. **The dynamic water level should always be more than 3 feet above the inlet strainer of the pump.**

Disconnect the temporary piping arrangements and complete the final piping connections.

Under no circumstances should the pump be operated for any prolonged period of time with the discharge valve closed. This can result in motor and pump damage due to overheating. A properly sized relief valve should be installed at the well head to prevent the pump from running against a closed valve.

Start the pump and test the system. Check and record the voltage and current draw on each motor lead.

(con't)

Operation

1. The pump and system should be periodically checked for water quantity, pressure, drawdown, periods of cycling and operation of controls.

2. If the pump fails to operate, or there is a loss of performance, refer to Troubleshooting, Section 8.

SECTION 8.

Troubleshooting

The majority of problems that develop with submersible pumps are electrical, and most of these problems can be corrected without pulling the pump from the well. The following chart covers most of the submersible service work. As with any troubleshooting procedure, start with the simplest solution first; always make all the above-ground checks before pulling the pump from the well.

Usually only two instruments are needed – a combination voltmeter/ammeter, and an ohmmeter. These are relatively inexpensive and can be obtained from most water systems suppliers.

WHEN WORKING WITH ELECTRICAL CIRCUITS, USE CAUTION TO AVOID ELECTRICAL SHOCK. It is recommended that rubber gloves and boots be worn and that care is taken to have metal control boxes and motors grounded to power supply ground or steel drop pipe or casing extending into the well. WARNING: Submersible motors are intended for operation in a well. When not operated in a well, failure to connect motor frame to power supply ground may result in serious electrical shock.

Preliminary Tests

SUPPLY VOLTAGE

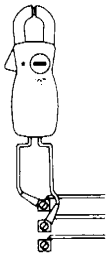

How to Measure

By means of a voltmeter, which has been set to the proper scale, measure the voltage at the control box or starter.

On single-phase units, measure between line and neutral.

On three-phase units measure between the legs (phases.)

What it Means

When the motor is under load, the voltage should be within ± 10% of the nameplate voltage. Larger voltage variation may cause winding damage.

Large variations in the voltage indicate a poor electrical supply and the pump should not be operated until these variations have been corrected.

If the voltage constantly remains high or low, the motor should be changed to the correct supply voltage.

CURRENT MEASUREMENT

How to Measure

By use of an ammeter, set on the proper scale, measure the current on each power lead at the control box or starter. See Electrical Data, Table E, for motor amp draw information.

Current should be measured when the pump is operating at a constant discharge pressure with the motor fully loaded.

What it Means

If the amp draw exceeds the listed service factor amps (SFA) or if the current unbalance is greater than 5% between each leg on three-phase units, check for the following:

1. Burnt contacts on motor starter.
2. Loose terminals in starter or control box or possible cable defect. Check winding and insulation resistances
3. Supply voltage too high or low.
4. Motor windings are shorted.
5. Pump is damaged, causing a motor overload.

WINDING RESISTANCE

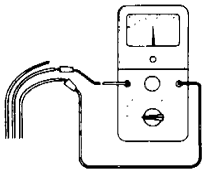

How to Measure

Turn off power and disconnect the drop cable leads in the control box or starter. Using an ohmmeter, set the scale selectors to Rx1 for values under 10 ohms and and Rx10 for values over 10 ohms.

Zero-adjust the meter and measure the resistance between leads. Record the values.

Motor resistance values can be found in Electrical Data, Table E. Cable resistance values are in Table G.

What it Means

If all the ohm values are normal, and the cable colors correct, the windings are not damaged.

If any one ohm value is less than normal, the motor may be shorted.

If any one ohm value is greater than normal, there is a poor cable connection or joint. The windings or cable may also be open.

If some of the ohm values are greater than normal and some less, the drop cable leads are mixed. To verify lead colors, see resistance values in Electrical Data, Table E.

INSULATION RESISTANCE

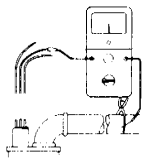

How to Measure

Turn off power and disconnect the drop cable leads in the control box or starter. Using an ohm or mega ohmmeter, set the scale selector to Rx100K and zero-adjust the meter.

Measure the resistance between the lead and ground (discharge pipe or well casing, if steel).

What it Means

For ohm values, refer to table below. Motors of all HP, voltage, phase and cycle duties have the same value of insulation resistance.

OHM VALUE	MEGAOHM VALUE	CONDITION OF MOTOR AND LEADS
		Motor not yet installed:
2,000,000 (or more)	2.0	New Motor.
1,000,000 (or more)	1.0	Used motor which can be reinstalled in the well.
		Motor in well (Ohm readings are for drop cable plus motor):
500,000 - 1,000,000	0.5 - 1.0	A motor in reasonably good condition.
20,000 - 500,000	0.02 - 0.5	A motor which may have been damaged by lightning or with damaged leads. Do not pull the pump for this reason.
10,000 - 20,000	0.01 - 0.02	A motor which definitely has been damaged or with damaged cable. The pump should be pulled and repairs made to the cable or the motor replaced. The motor will still operate, but probably not for long.
less than 10,000	0 - 0.01	A motor which has failed or with completely destroyed cable insulation. The pump must be pulled and the cable repaired or the motor replaced. The motor will not run in this condition.

Troubleshooting Chart

FAULT	POSSIBLE CAUSES	HOW TO CHECK	HOW TO CORRECT
A. Pump Does Not Run	**1.** No power at pump panel.	Check for voltage at panel.	If no voltage at panel, check feeder panel for tripped circuits.
	2. Fuses are blown or circuit breakers are tripped.	Remove fuses and check for continuity with ohmmeter.	Replace blown fuses or reset circuit breaker. If new fuses blow or circuit breaker trips, the electrical installation and motor must be checked.
	3. Motor starter overloads are burnt or have tripped out (three-phase only).	Check for voltage on line and load side of starter.	Replace burnt heaters or reset. Inspect starter for other damage. If heater trips again, check the supply voltage and starter holding coil.
	4. Starter does not energize (three-phase only).	Energize control circuit and check for voltage at the holding coil.	If no voltage, check control circuit. If voltage, check holding coil for shorts. Replace bad coil.
	5. Defective controls.	Check all safety and pressure switches for operation. Inspect contacts in control devices.	Replace worn or defective parts.
	6. Motor and/or cable are defective.	Turn off power. Disconnect motor leads from control box. Measure the lead-to-lead resistances with the ohmmeter (Rx1). Measure lead-to-ground values with ohmmeter (Rx100K). Record measured values.	If open motor winding or ground is found, remove pump and recheck values at the surface. Repair or replace motor or cable.
	7. Defective capacitor (single-phase only).	Turn off the power, then discharge capacitor. Check with an ohmmeter (Rx100K). When meter is connected, the needle should jump forward and slowly drift back.	If there is no needle movement, replace the capacitor.

(con't)

Troubleshooting Chart (continued)

FAULT	POSSIBLE CAUSES	HOW TO CHECK	HOW TO CORRECT
B. Pump Runs But Does Not Deliver Water	**1.** Groundwater level in well is too low or well is collapsed.	Check well draw-down. Water level should be at least 3 ft. above pump inlet during operation.	If not, lower pump if possible, or throttle discharge valve and install water level control.
	2. Integral pump check valve is blocked.	Install pressure gauge, start pump, gradually close the discharge valve and read pressure at shut-off. After taking reading, open valve to its previous position. Convert PSI to feet (For water: PSI x 2.31 ft/PSI = _____ ft.), and add this to the total vertical distance from the pressure gauge to the water level in the well while the pump is running. Refer to the specific pump curve for the shut-off head for that pump model. If the measured head is close to the curve, pump is probably OK.	If not close to the pump curve, remove pump and inspect discharge section. Remove blockage, repair valve and valve seat if necessary. Check for other damage. Rinse out pump and re-install.
	3. Inlet strainer is clogged.	Same as B.2 above.	If not close to the pump curve, remove pump and inspect. Clean strainer, inspect integral check valve for blockage, rinse out pump and reinstall.
	4. Pump is damaged.	Same as B.2 above.	If damaged, repair as necessary. Rinse out pump and re-install.
C. Pump Runs But at Reduced Capacity	**1.** Wrong rotation (three-phase only).	Check for proper electrical connection in control panel.	Correct wiring and change leads as required.
	2. Draw-down is larger than anticipated.	Check draw-down during pump operation.	Lower pump if possible. If not, throttle discharge valve and install water level control.
	3. Discharge piping or valve leaking.	Examine system for leaks.	Repair leaks.
	4. Pump strainer or check valve are clogged.	Same as B.2 above.	If not close to the pump curve, remove pump and inspect. Clean strainer, inspect integral check valve for blockage, rinse out pump and reinstall.
	5. Pump worn.	Same as B.2 above.	If not close to pump curve, remove pump and inspect.
D. Pump Cycles Too Much	**1.** Pressure switch is not properly adjusted or is defective.	Check pressure setting on switch and operation. Check voltage across closed contacts.	Re-adjust switch or replace if defective.
	2. Level control is not properly set or is defective.	Check setting and operation.	Re-adjust setting (refer to manufacturer data.) Replace if defective.
	3. Insufficient air charging or leaking tank or piping.	Pump air into tank or diaphram chamber. Check diaphram for leak. Check tank and piping for leaks with soap and water solution. Check air to water volume.	Repair or replace damaged component.
	4. Plugged snifter valve or bleed orifice.	Examine valve and orifice for dirt or corrosion.	Clean and/or replace if defective.
	5. Tank is too small.	Check tank size. Tank volume should be approximately 10 gallons for each gpm of pump capacity.	If tank is too small, replace with proper size tank.

(con't)

Troubleshooting Chart (continued)

FAULT	POSSIBLE CAUSES	HOW TO CHECK	HOW TO CORRECT
E. Fuses Blow or Circuit Breakers Trip	**1.** High or low voltage.	Check voltage at pump panel. If not within ± 10%, check wire size and length of run to pump panel.	If wire size is correct, contact power company. If not, correct and/or replace as necessary.
	2. Three-phase current unbalance.	Check current draw on each lead. Unbalance must be within ± 5%.	If current unbalance is not within ± 5%, contact power company.
	3. Control box wiring and components (single-phase only).	Check that control box parts match the parts list. Check to see that wiring matches wiring diagram. Check for loose or broken wires or terminals.	Correct as required.
	4. Defective capacitor (single-phase only).	Turn off power and discharge capacitor. Check using an ohmmeter (Rx100K). When the meter is connected, the needle should jump forward and slowly drift back.	If no meter movement, replace the capacitor.
	5. Starting relay (Franklin single-phase motors only).	Check resistance of relay coil with an ohmmeter (Rx1000K). Check contacts for wear.	Replace defective relay.

SECTION 9. Technical Data

Table A

Minimum Water Flow Requirements for Submersible Pump Motors

MOTOR DIAMETER	CASING OR SLEEVE I.D. IN INCHES	MIN. FLOW PAST THE MOTOR (GPM)
4"	4	1.2
	5	7
	6	13
	7	21
	8	30
6"	6	10
	7	28
	8	45
	10	85
	12	140
	14	198
	16	275
8"	8	10
	10	55
	12	110
	14	180
	16	255
10"	10	30
	12	85
	14	145
	16	220
	18	305

NOTES:
1. A flow inducer or sleeve must be used if the water enters the well above the motor or if there is insufficient water flow past the motor.
2. The minimum recommended water velocity over 4" motors is 0.25 feet per second.
3. The minimum recommended water velocity over 6, 8, and 10" motors is 0.5 feet per second.

Table B

Guide for Engine-Driven Generators in Submersible Pump Applications

	MINIMUM KILOWATT RATING OF GENERATOR FOR THREE-WIRE SUBMERSIBLE PUMP MOTORS	
MOTOR HP FOR SINGLE OR THREE PHASE UNITS	EXTERNALLY REGULATED GENERATOR	INTERNALLY REGULATED GENERATOR
0.33 HP	1.5 KW	1.2 KW
0.50	2.0	1.5
0.75	3.0	2.0
1.0	4.0	2.5
1.5	5.0	3.0
2.0	7.5	4.0
3.0	10.0	5.0
5.0	15.0	7.5
7.5	20.0	10.0
10.0	30.0	15.0
15.0	40.0	20.0
20.0	60.0	25.0
25.0	75.0	30.0
30.0	100.0	40.0
40.0	100.0	50.0
50.0	150.0	60.0
60.0	175.0	75.0
75.0	250.0	100.0
100.0	300.0	150.0
125.0	375.0	175.0
150.0	450.0	200.0
200.0	600.0	275.0

NOTES:
1. Table is based on typical 80°C rise continuous duty generators with 35% maximum voltage dip during start-up of single-phase and three-phase motors.
2. Contact the manufacturer of the generator to assure the unit has adequate capacity to run the submersible motor.
3. If the generator rating is in KVA instead of kilowatts, multiply the above ratings by 1.25 to obtain KVA.

Table C

Transformer Capacity Required for Three-Phase Submersible Pump Motors

		MINIMUM KVA RATING FOR EACH TRANSFORMER	
THREE-PHASE MOTOR HP	MINIMUM TOTAL KVA REQUIRED*	2 TRANSFORMERS OPEN DELTA OR WYE	3 TRANSFORMERS DELTA OR WYE
1.5	3	2	1
2	4	2	1 ½
3	5	3	2
5	7 ½	5	3
7.5	10	7 ½	5
10	15	10	5
15	20	15	7 ½
20	25	15	10
25	30	20	10
30	40	25	15
40	50	30	20
50	60	35	20
60	75	40	25
75	90	50	30
100	120	65	40
125	150	85	50
150	175	100	60
200	230	130	75

* Pump motor KVA requirements only, and does not include allowances for other loads.

Table D

Submersible Pump Cable Selection Chart (60 Hz)

The following tables list the recommended copper cable sizes and various cable lengths for submersible pump motors.

These tables comply with the 1978 edition of the National Electric Table 310-16, Column 2 for 75°C wire. The ampacity (current carrying properties of a conductor) have been divided by 1.25 per the N.E.C., Article 430-22, for motor branch circuits based on motor amps at rated horsepower.

To assure adequate starting torque, the maximum cable lengths are calculated to maintain 95% of the service entrance voltage at the motor when the motor is running at maximum nameplate amps. Cable sizes larger than specified may always be used and will reduce power usage.

The use of cables smaller than the recommended sizes will void the warranty. Smaller cable sizes will cause reduced starting torque and poor motor operation.

SINGLE-PHASE MOTOR MAXIMUM CABLE LENGTH (Motor to service entrance)(2)

MOTOR RATING		COPPER WIRE SIZE												
VOLTS	HP	14	12	10	8	6	4	2	0	00	000	0000	250	300
115	⅓	130	210	340	540	840	1300	1960	2910					
	½	100	160	250	390	620	960	1460	2160					
230	⅓	550	880	1390	2190	3400	5250	7960						
	½	400	650	1020	1610	2510	3880	5880						
	¾	300	480	760	1200	1870	2890	4370	6470					
	1	250	400	630	990	1540	2380	3610	5360	6520				
	1½	190	310	480	770	1200	1870	2850	4280	5240				
	2	150	250	390	620	970	1530	2360	3620	4480				
	3	120	190	300	470	750	1190	1850	2890	3610				
	5			180	280	450	710	1110	1740	2170				
	7½				200	310	490	750	1140	1410				
	10					250	390	600	930	1160				

CAUTION: Use of wire size smaller than listed will void warranty.

FOOTNOTES:

1. If aluminum conductor is used, multiply lengths by 0.5. Maximum allowable length of aluminum is considerably shorter than copper wire of same size.
2. The portion of the total cable which is between the service entrance and a 3Ø motor starter should not exceed 25% of the total maximum length to assure reliable starter operation. Single-phase control boxes may be connected at any point of the total cable length.
3. Cables #14 to #0000 are AWG sizes, and 250 to 300 are MCM sizes.

(con't)

THREE-PHASE MOTOR MAXIMUM CABLE LENGTH
(Motor to service entrance)(2)

MOTOR RATING		COPPER WIRE SIZE												
VOLTS	HP	14	12	10	8	6	4	2	0	00	000	0000	250	300
208	1½	310	500	790	1260									
	2	240	390	610	970	1520								
	3	180	290	470	740	1160	1810							
	5		170	280	440	690	1080	1660						
	7½			200	310	490	770	1180	1770					
	10				230	370	570	880	1330	1640				
	15					250	390	600	910	1110	1340			
	20						300	460	700	860	1050	1270		
	25							370	570	700	840	1030	1170	
	30							310	470	580	700	850	970	1110
230	1½	360	580	920	1450									
	2	280	450	700	1110	1740								
	3	210	340	540	860	1340	2080							
	5		200	320	510	800	1240	1900						
	7½			230	360	570	890	1350	2030					
	10				270	420	660	1010	1520	1870				
	15					290	450	690	1040	1280	1540			
	20						350	530	810	990	1200	1450		
	25						280	430	650	800	970	1170	1340	
	30							350	540	660	800	970	1110	1270
460	1½	1700												
	2	1300	2070											
	3	1000	1600	2520										
	5	590	950	1500	2360									
	7½	420	680	1070	1690	2640								
	10	310	500	790	1250	1960	3050							
	15			540	850	1340	2090	3200						
	20			410	650	1030	1610	2470	3730					
	25				530	830	1300	1990	3010	3700				
	30				430	680	1070	1640	2490	3060	3700			
	40						790	1210	1830	2250	2710	3290		
	50						640	980	1480	1810	2190	2650	3010	
	60							830	1250	1540	1850	2240	2540	2890
	75								1030	1260	1520	1850	2100	2400
	100									940	1130	1380	1560	1790
	125											1080	1220	1390
	150												1050	1190
	200												1080	1300
	250													1080
575	1½	2620												
	2	2030												
	3	1580	2530											
	5	920	1480	2330										
	7½	660	1060	1680	2650									
	10	490	780	1240	1950									
	15		530	850	1340	2090								
	20			650	1030	1610	2520							
	25			520	830	1300	2030	3110						
	30				680	1070	1670	2560	3880					
	40					790	1240	1900	2860	3510				
	50						1000	1540	2310	2840	3420			
	60						850	1300	1960	2400	2890	3500		
	75							1060	1600	1970	2380	2890	3290	
	100								1190	1460	1770	2150	2440	2790

CAUTION: Use of wire size smaller than listed will void warranty.

FOOTNOTES:

1. If aluminum conductor is used, multiply lengths by 0.5. Maximum allowable length of aluminum is considerably shorter than copper wire of same size.
2. The portion of the total cable which is between the service entrance and a 3Ø motor starter should not exceed 25% of the total maximum length to assure reliable starter operation. Single-phase control boxes may be connected at any point of the total cable length.
3. Cables #14 to #0000 are AWG sizes, and 250 to 300 are MCM sizes.

Table E

Electrical Data
Submersible Pump Motors - 60 Hz

GRUNDFOS MOTORS

4 Inch (Two Wire) Motors - Control Box Not Required

60 Hz

HP	Ph	VOLT	Ser. Fact.	Circ. Brk. or Stnd. Fuse	Dual Element Fuse	AMPERAGE Full Load	AMPERAGE Lock Rotor	AMPERAGE S.F. Amps	FULL LOAD Eff.	FULL LOAD Power Factor	Line-to-Line Resistance(Ohms) Blk-Yel	Line-to-Line Resistance(Ohms) Red-Yel	KVA Code **	Three-Phase Overload Protection Starter Size	Three-Phase Overload Protection Furnas Amb. Comp	Max. Thrust (lbs)	EGG CRATE NUMBER (stenciled into motor housing)	GRUNDFOS PART NO.
											Delta							
SINGLE PHASE																		
1/3	1	230	1.75	15	5	3.0	25.5	4.4	47.3	63.0	6.8-8.2		S	--	--	750	79.952101	79.1595018
1/2	1	230	1.60	15	7	4.3	34.5	5.9	50.6	64.7	5.2-6.3		R	--	--	750	79.952102	79.1595028
3/4	1	230	1.50	20	9	6.6	40.5	8.0	57.0	70.0	3.2-3.8		N	--	--	750	79.952103	79.1595038
1	1	230	1.40	25	12	8.0	47.4	9.6	59.8	74.3	2.5-3.1		M	--	--	750	79.952104	79.1595048
1 1/2	1	230	1.30	35	15	10.6	60.8	13.1	64.3	77.2	1.9-2.3		L	--	--	750	79.952105	79.1595058

4 Inch (Three Wire) Motors

SINGLE PHASE																		
1/3	1	230	1.75	15	5	3.0	14.0	4.4	47.0	63.0	6.8-8.3	17.3-21.1	L	--	--	750	79.453101	79.1545018
1/2	1	230	1.60	15	7	4.3	20.0	5.9	50.7	64.6	4.7-5.7	15.8-19.6	L	--	--	750	79.453102	79.1545028
3/4	1	230	1.50	20	9	6.6	30.8	8.0	57.3	70.0	3.2-3.9	14-17.2	L	--	--	750	79.453103	79.1545038
1	1	230	1.40	25	12	8.0	36.3	9.6	59.8	74.5	2.6-3.1	10.3-12.5	K	--	--	750	79.453104	79.1545048
1 1/2	1	230	1.30	30	15	9.7	44.0	11.5	67.5	84.1	1.9-2.3	7.8-9.6	H	--	--	750	79.453105	79.1545058
THREE PHASE																		
1 1/2	3	230	1.30	15	8	5.0	32.0	6.3	70.0	80.6	3.9		K	0	K41	750	79.302005	79.1530058
		460	1.30	10	4	2.5	16.0	3.2	70.0	80.6	15.9		K	0	K32	750	79.362005	79.1536058
		575	1.30	10	4	2.0	12.8	2.5	70.0	80.6	25.2		K	0	K28	750	79.392005	79.1539058
2	3	230	1.25	20	10	6.0	12.8	7.5	73.0	86.8	3.0		J	0	K50	750	79.302006	79.1530068
		460	1.25	10	5	3.0	19.0	3.8	73.0	86.8	12.1		J	0	K34	750	79.362006	79.1536068
		575	1.25	10	4	2.4	15.2	3.0	73.0	86.8	18.8		J	0	K31	750	79.392006	79.1539068
3	3	230	1.15	30	15	9.6	51.0	11.2	68.5	83.8	2.2		H	0	K54	1000	79.300007	79.0930078
		460	1.15	15	7	4.8	25.5	5.6	68.5	83.8	9.0		H	0	K37	1000	79.360007	79.0936078
		575	1.15	15	6	3.8	20.4	4.5	68.5	83.8	13.0		H	0	K36	1000	79.390007	79.0939078
5	3	230	1.15	40	25	15.2	89	17.8	71.9	80.0	1.2		H	1	K61	1000	79.300009	79.0930098
		460	1.15	20	12	7.6	45	8.9	71.9	80.0	5.0		H	0	K50	1000	79.360009	79.0936098
		575	1.15	15	9	6.1	35	7.1	71.9	80.0	7.3		H	0	K43	1000	79.390009	79.0939098

6 Inch (Three Wire) Motors

THREE PHASE																		
7 1/2	3	230	1.15	60	35	23.3	120	26.5	74.0	80.5	0.55		H	1	K67	1100	78.300116	78.1030168
		460	1.15	30	15	11.0	55	12.8	75.0	84.0	2.25		G	1	K56	1100	78.350116	78.1036168
10	3	230	1.15	80	45	30.0	150	34.5	74.9	85.0	0.41		G	1 3/4	K70	1100	78.300117	78.1030178
		460	1.15	40	20	14.8	70	17.0	75.0	86.2	1.70		F	1	K60	1100	78.350117	78.1036178
15	3	230	1.15	125	60	44.4	225	51	76.0	83.7	0.25		G	2 1/2	K76	3300	78.300118	78.1030188
		460	1.15	60	30	21.2	102	25	75.8	86.5	1.16		F	1 3/4	K67	3300	78.350118	78.1036188
20	3	230	1.15	150	80	56.1	290	66	78.0	87.8	0.20		G	3	K79	3300	78.300119	78.1030198
		460	1.15	80	40	28.0	145	33	77.5	87.0	0.78		G	2	K68	3300	78.350119	78.1036198
25	3	460	1.15	100	50	33.6	175	40	79.0	87.1	0.64		F	2	K73	3300	78.350120	78.1036208
30	3	460	1.15	110	60	40.8	220	48	78.8	88.0	0.52		G	2 1/2	K76	3300	78.350121	78.1036218

HITACHI MOTORS

6 Inch (Three Wire) Motors

60 Hz

HP	Ph	VOLTS	Service Factor	Circuit Breaker or Standard Fuse	Dual Element Fuse	AMPERAGE Full Load	AMPERAGE Locked Rotor	AMPERAGE S.F. Amps	FULL LOAD Eff.	FULL LOAD Power Factor	Line-to-Line Resistance(Ohms) Blk-Yel	Line-to-Line Resistance(Ohms) Red-Yel	KVA Code **	Three-Phase Overload Protection Starter Size	Three-Phase Overload Protection Furnas Amb. Comp	Maximum Thrust (lbs)	GRUNDFOS PART NO.
											Delta						
5	1	230	1.15	80	35	23.8	124	27.1	74.8	91.2	0.51	2.2	G	--	--	1500	82.4119H
	3	230	1.15	45	20	14.8	110	16.4	76.8	82.5	0.81		K	1	K58	1500	82.9115H3
	3	460	1.15	25	10	7.4	55	8.2	76.8	82.5	3.05		K	1	K43	1500	82.9115H6
7 1/2	1	230	1.15	125	45	35.2	167	40.9	72.9	94.9	0.40	1.40	F	--	--	1500	82.4121H
	3	230	1.15	70	30	21.8	144	24.4	78.5	81.8	0.65		J	1	K64	1500	82.9116H3
	3	460	1.15	35	15	10.9	72	12.2	78.5	81.8	2.43		J	1	K54	1500	82.9116H6
10	1	230	1.15	175	60	48.0	202	54.0	73.6	93.2	0.32	1.05	E	--	--	3500	82.4123H
	3	230	1.15	80	40	28.2	208	32.0	79.3	82.8	0.45		K	1.75	K68	3500	82.9117H3
	3	460	1.15	40	20	14.3	104	16.0	79.3	82.8	1.62		K	1	K58	3500	82.9117H6
15	1	230	1.15	250	100	70.8	275	84.9	73.7	93.2	0.23	0.68	D	--	--	3500	82.9118H3
	3	230	1.15	125	60	41.4	320	46.2	81.7	83.2	0.31		K	2	K74	3500	82.9118H3
	3	460	1.15	60	30	20.7	160	23.1	81.7	83.2	1.07		K	1.75	K63	3500	82.9118H6
20	3	230	1.15	175	70	53.0	392	63.0	83.2	84.9	0.26		K	2.5	K77	3500	82.9119H3
	3	460	1.15	90	35	26.5	196	30.0	83.2	84.9	0.86		K	2	K67	3500	82.9119H6
25	3	230	1.15	200	90	67.2	530	75.4	83.0	83.9	0.21		K	3	K83	3500	82.9120H3
	3	460	1.15	100	45	33.6	265	37.7	83.0	83.9	0.67		K	2	K72	3500	82.9120H6
30	3	230	1.15	250	110	80.8	610	90.6	82.5	84.3	0.16		K	3	K86	3500	82.9121H3
	3	460	1.15	125	50	40.4	305	45.3	82.5	84.3	0.55		K	2.5	K74	3500	82.9121H6
40	3	460	1.15	150	70	51.7	340	58.8	84.0	86.3	0.46		H	3	K76	5000	82.3228H
50	3	460	1.15	200	90	69.7	465	78.8	82.5	81.4	0.39		J	3	K83	5000	82.3229H
60	3	460	1.15	225	100	80.8	465	92.8	82.4	84.4	0.39		G	3.5	K86	5000	82.3230H

8 Inch Motors

40	3	460	1.15	150	70	54.3	380	60.9	83.9	82.1	0.37	J	3	K76	10,000	82.3270H
50	3	460	1.15	200	90	64.9	435	73.6	84.1	85.7	0.33	H	3	K78	10,000	82.3271H
60	3	460	1.15	225	100	77.8	510	88.5	84.7	85.3	0.28	H	3.5	K86	10,000	82.3272H
75	3	460	1.15	350	150	96.7	650	110	84.9	85.9	0.22	H	3.5	K88	10,000	82.3274H
100	3	460	1.15	400	175	127	795	145	85.2	86.6	0.16	H	4	K89	10,000	82.3275H
125	3	460	1.15	500	225	172.0	980	192	84.2	80.9	0.14	G	4.5	K28	10,000	82.36H042
150	3	460	1.15	600	250	187.0	1060	216	85.6	87.9	0.13	G	4.5	K29	10,000	82.36H043

10 Inch Motors

200	3	460	1.15	800	350	233.0	1260	270	87.2	92.2	0.09	F	5	K33	10,000	82.36H064
250	3	460	1.15	900	450	294.0	1500	344	86.5	92.1	0.08	E	6	K27	10,000	82.36H066

Franklin Motors

(refer to the Franklin Submersible Motors Application Maintenance Manual)

Table F

Example: Correcting for Three-Phase Power Unbalance

Example: Check for current unbalance for a 230 volt, 3 phase, 60 Hz submersible pump motor, 18.6 full load amps.

Solution: Steps 1 to 3 measure and record amps on each motor drop lead for Hookups 1, 2 and 3.

	Step 1 (Hookup 1)	Step 2 (Hookup 2)	Step 3 (Hookup 3)
(T_1)	DL_1 = 25.5 amps	DL_3 = 25 amps	DL_2 = 25.0 amps
(T_2)	DL_2 = 23.0 amps	DL_1 = 24 amps	DL_3 = 24.5 amps
(T_3)	DL_3 = 26.5 amps	DL_2 = 26 amps	DL_1 = 25.5 amps
Step 4	Total = 75 amps	Total = 75 amps	Total = 75 amps
Step 5	Average Current =	Total current = / 3 readings	75 / 3 = 25 amps
Step 6	Greatest amp difference from the average:	(Hookup 1) = 25-23 = 2 (Hookup 2) = 26-25 = 1 (Hookup 3) = 25.5-25 = .5	
Step 7	% Unbalance	(HOOKUP 1) = 2/25 X 100 = 8 (HOOKUP 2) = 1/25 X 100 = 4 (HOOKUP 3) = .5/25 X 100 = 2	

As can be seen, Hookup 3 should be used since it shows the least amount of current unbalance. Therefore, the motor will operate at maximum efficiency and reliability.

By comparing the current values recorded on each leg, you will note the highest value was always on the same leg, L_3. This indicates the unbalance is in the power source. If the high current values were on a different leg each time the leads were changed, the unbalance would be caused by the motor or a poor connection.

If the current is greater than 5%, contact your power company for help.

* For a detailed explanation of three-phase balance procedures, see Three-Phase Motor, section 2, page 6.

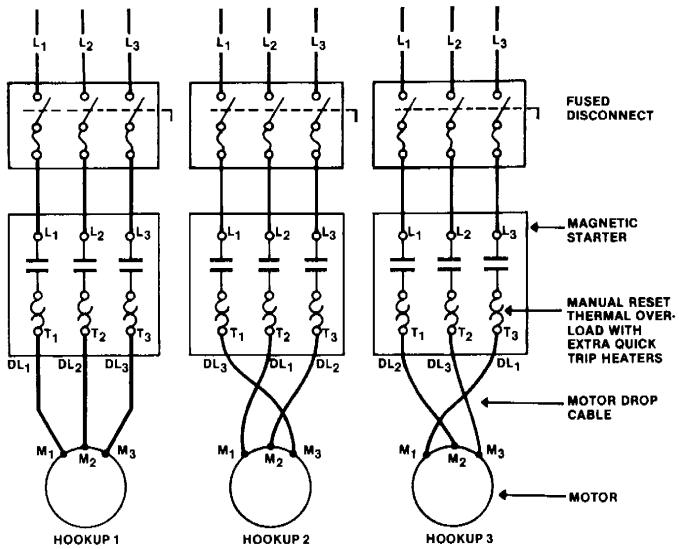

Table G

Total Resistance of Drop Cable (OHMS)

The values shown in this table are for copper conductors. Values are for the total resistance of drop cable from the **control box to the motor and back.**

To determine the resistance:

1. Disconnect the drop cable leads from the control box or panel.
2. Record the size and length of drop cable.
3. Determine the cable resistance from the table.
4. Add drop cable resistance to motor resistance. Motor resistances can be found in the Electrical Data Chart, Table E.
5. Measure the resistance between each drop cable lead using an ohmmeter. Meter should be set on Rx1 and zero-balanced for this measurement.
6. The measured values should be approximately equal to the calculated values.

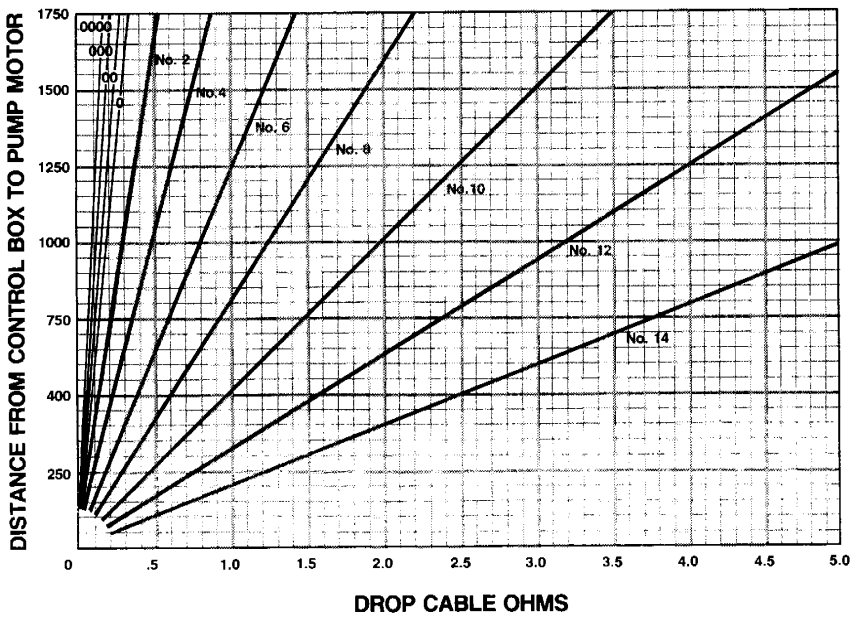

Limited Warranty

Products manufactured by GRUNDFOS PUMPS CORPORATION (GRUNDFOS) are warranted to the original user only to be free of defects in material and workmanship for a period of 18 months from date of installation, but not more than 24 months from date of manufacture. GRUNDFOS' liability under this warranty shall be limited to repairing or replacing at GRUNDFOS' option, without charge, F.O.B. GRUNDFOS' factory or authorized service station, any product of GRUNDFOS manufacture. GRUNDFOS will not be liable for any costs of removal, installation, transportation, or any other charges which may arise in connection with a warranty claim. Products which are sold but not manufactured by GRUNDFOS are subject to the warranty provided by the manufacturer of said products and not by GRUNDFOS' warranty. GRUNDFOS will not be liable for damage or wear to products caused by abnormal operating conditions, accident, abuse, misuse, unauthorized alteration or repair, or if the product was not installed in accordance with GRUNDFOS' printed installation and operating instructions.

To obtain service under this warranty, the defective product must be returned to the distributor or dealer of GRUNDFOS products from which it was purchased together with proof of purchase and installation date, failure date, and supporting installation data. Unless otherwise provided, the distributor or dealer will contact GRUNDFOS or an authorized service station for instructions. Any defective product to be returned to GRUNDFOS or a service station must be sent freight prepaid; documentation supporting the warranty claim and/or a Return Material Authorization must be included if so instructed.

GRUNDFOS WILL NOT BE LIABLE FOR ANY INCIDENTAL OR CONSEQUENTIAL DAMAGES, LOSSES, OR EXPENSES ARISING FROM INSTALLATION, USE OR ANY OTHER CAUSES. THERE ARE NO EXPRESS OR IMPLIED WARRANTIES, INCLUDING MERCHANTABILITY OR FITNESS FOR A PARTICULAR PURPOSE, WHICH EXTEND BEYOND THOSE WARRANTIES DESCRIBED OR REFERRED TO ABOVE.

Some jurisdictions do not allow the exclusion or limitation of incidental or consequential damages and some jurisdictions do not allow limitations on how long implied warranties may last. Therefore, the above limitations or exclusions may not apply to you. This warranty gives you specific legal rights and you may also have other rights which vary from jurisdiction to jurisdiction.

GRUNDFOS®

GRUNDFOS PUMPS CORP. • 2555 Clovis Ave. • Clovis, CA 93612
Sales Support Centers: Allentown, PA • Atlanta, GA • Buffalo Grove, IL
Canada: Mississauga, ONT

L-SP-TL-031 | Rev. 12/93
PRINTED IN USA

Model 230S 230 GPM Performance Curves

FLOW RANGE: 160 -320 GPM **OUTLET SIZE: 3" NPT** **NOMINAL DIA. 6"**

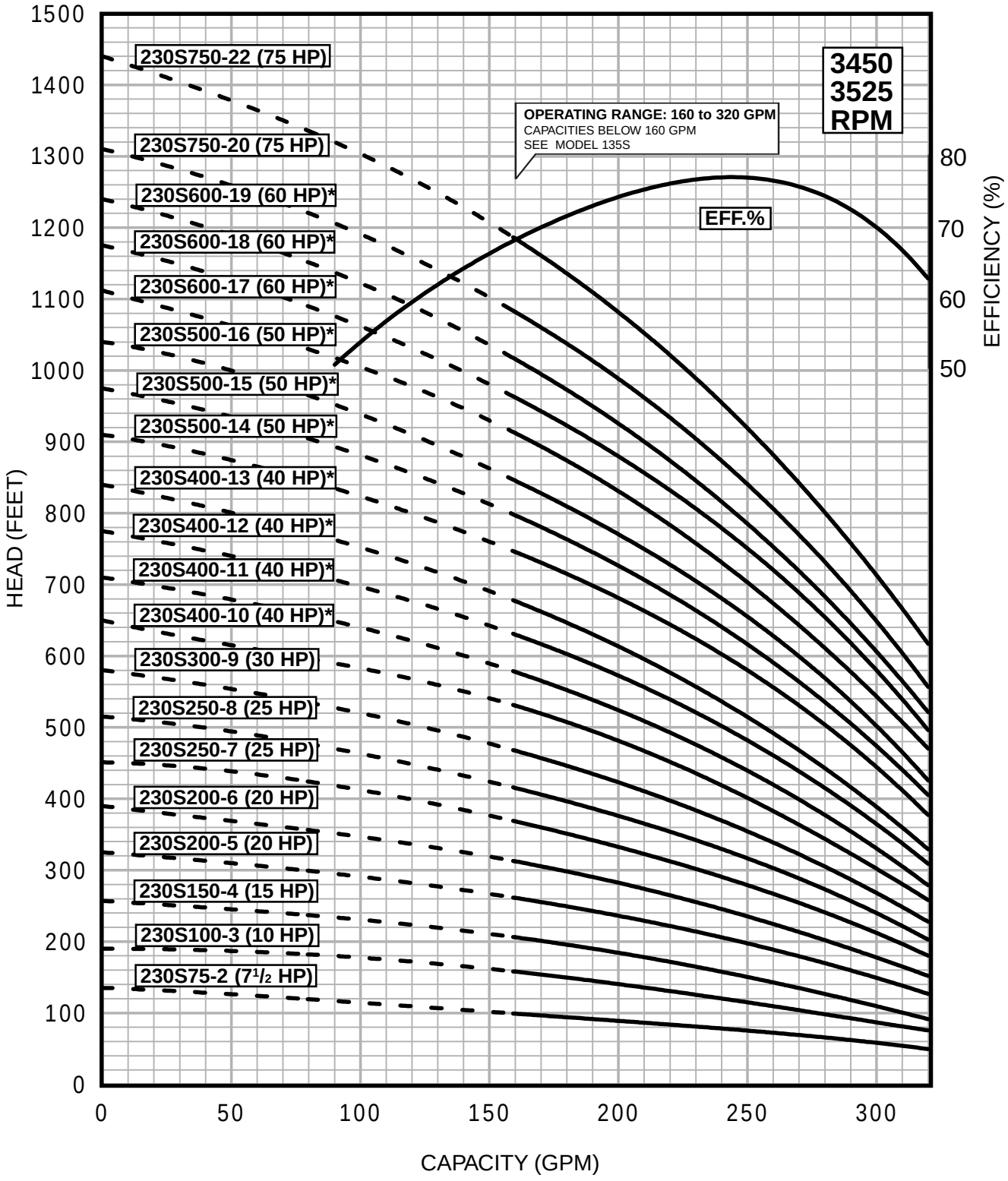

SPECIFICATIONS SUBJECT TO CHANGE WITHOUT NOTICE.
4" MOTOR STANDARD, 7.5 HP/3450 RPM
6" MOTOR STANDARD, 7.5-40 HP/3450 RPM.
8" MOTOR STANDARD, 50-75 HP/3525 RPM.
* Alternate motor sizes available.

Performance conforms to ISO 2548 Annex B
@ 8 ft. min. submergence.

GRUNDFOS®

Technical Data 230 GPM Model 230S

DIMENSIONS AND WEIGHTS

MODEL NO.	FIG.	HP	MOTOR SIZE	DISCH. SIZE	DIMENSIONS IN INCHES A	B	C	D	E	APPROX. SHIP WT.
230S75-2	A	7.5	4"	3" NPT	48.5	29.6	18.9	3.8	5.6	88
230S100-3	A	10	4"	3" NPT	67.8	43.9	23.9	3.8	5.6	146
230S75-2	A	7.5	6"	3" NPT	43.0	24.2	18.9	5.4	5.7	124
230S100-3	A	10	6"	3" NPT	49.3	25.4	23.9	5.4	5.7	140
230S150-4	A	15	6"	3" NPT	56.4	28.0	28.4	5.4	5.7	161
230S200-5	A	20	6"	3" NPT	63.4	30.6	32.8	5.4	5.7	167
230S200-6	A	20	6"	3" NPT	67.8	30.6	37.3	5.4	5.7	186
230S250-7	A	25	6"	3" NPT	74.9	33.1	41.7	5.4	5.7	202
230S250-8	A	25	6"	3" NPT	79.3	33.1	46.2	5.4	5.7	209
230S300-9	A	30	6"	3" NPT	86.3	35.7	50.6	5.4	5.7	228
230S400-10*	A	40	6"	3" NPT	95.4	40.3	55.1	5.4	5.7	234
230S400-11*	A	40	6"	3" NPT	100.3	40.81	59.5	5.4	5.7	273
230S400-12*	A	40	6"	3" NPT	104.8	40.81	64.0	5.4	5.7	279
230S400-13*	A	40	6"	3" NPT	109.2	40.81	68.4	5.4	5.7	284
230S500-14*	A	50	6"	3" NPT	130.7	57.83	72.9	5.4	5.7	388
230S500-15*	A	50	6"	3" NPT	135.2	57.83	77.3	5.4	5.7	393
230S500-16*	A	50	6"	3" NPT	139.6	57.83	81.8	5.4	5.7	399
230S600-17*	A	60	6"	3" NPT	151.2	63.83	87.4	5.4	5.7	438
230S600-18*	A	60	6"	3" NPT	155.6	63.83	91.8	5.4	5.7	445
230S600-19*	A	60	6"	3" NPT	160.1	63.83	96.3	5.4	5.7	449
230S600-17	A	60	8"	3" NPT	129.2	41.79	87.4	7.5	7.6	544
230S600-18	A	60	8"	3" NPT	133.6	41.79	91.8	7.5	7.6	551
230S600-19	A	60	8"	3" NPT	138.0	41.79	96.3	7.5	7.6	555
230S750-20**	B	75	8"	4" M-NPT	154.7	47.41	107.3	7.5	7.6	634
230S750-22**	B	75	8"	4" M-NPT	163.6	47.41	116.2	7.5	7.6	681

NOTES: All models suitable for use in 6" wells, unless equipped with 8" motor.
Weights include pump end with motor in lbs.
* Alternate motor sizes available.
** Built into sleeve, 4" M-NPT, 8" motor required.

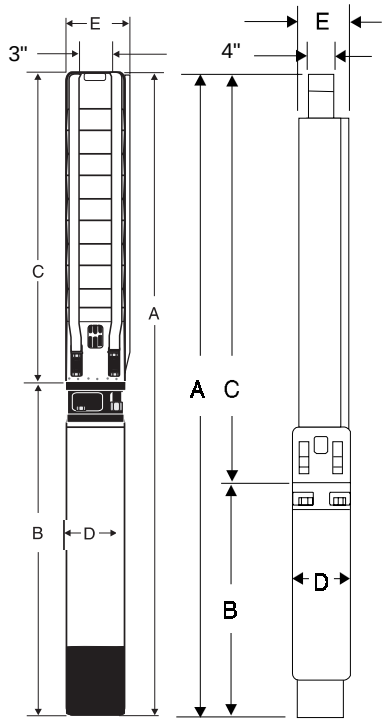

Fig. A Fig. B

MATERIALS OF CONSTRUCTION

COMPONENT	CYLINDRICAL SHAFT (2-18 Stgs.)
Check Valve Housing	304 Stainless Steel
Check Valve	304 Stainless Steel
Diffuser Chamber	304 Stainless Steel
Split Cone Nut	304 Stainless Steel
Split Cone	304 Stainless Steel
Impeller	304 Stainless Steel
Suction Interconnector	304 Stainless Steel
Inlet Screen	304 Stainless Steel
Straps	304 Stainless Steel
Cable Guard	304 Stainless Steel
Coupling	329/416 Stainless Steel
Coupling Key	302/304 Stainless Steel
Pump Shaft	431 Stainless Steel
Intermediate Bearings	NBR
Impeller Seal Ring	NBR/304 Stainless Steel
Check Valve Seat	NBR/316 Stainless Steel
Top/Lower Bearing	NBR/316 Stainless Steel
8" Motor Adaptor Plate	304 Stainless Steel
Upthrust Washer	Carbon/Graphite HY22
Upthrust stop ring	316 S.S./Tungsten Carbide
Sleeve*	304 Stainless Steel
Sleeve Flange*	304 Stainless Steel

NOTES: Specifications subject to change without notice.
* Required for 20-22 stage only.

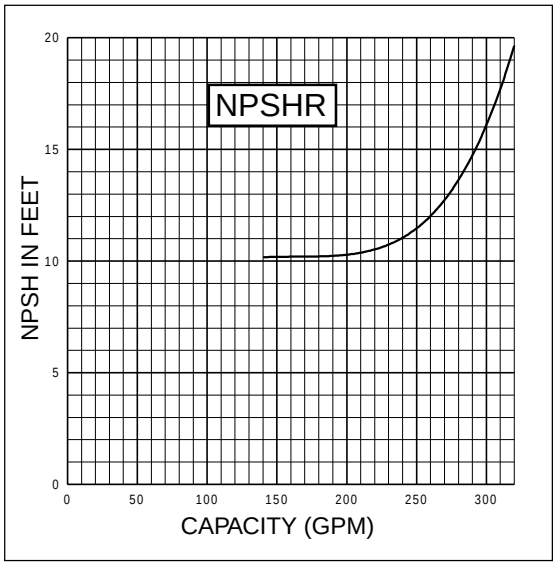

GRUNDFOS®

GRUNDFOS PUMPS CORPORATION • 3131 N. Business Park Avenue • Fresno, CA • 93727
Customer Service Centers: Allentown, PA • Fresno, CA
Phone (800) 333-1366 • FAX (800) 333-1363
Canada: Oakville, Ontario • **Mexico:** Apodaca, N.L.

LSP-TL-1230 Rev.7/98
PRINTED IN USA

APPENDIX C
ORS Small Diameter Probe Scavenger Pump Installation & Operation Manual

geotech

Small Diameter Probe Scavenger™/ System For 4" Diameter Wells

Installation and Operation Manual

7/30/99
Rev 5
PN 999-002-033

Geotech Environmental Equipment, Inc.
8035 East 40th Avenue
Denver, Colorado 80207
(303) 320-4764 • (800) 833-7958 • FAX (303) 322-7242
email: geotech@ix.netcom.com
website: www.geotechenv.com

ORS PROBE SCAVENGER™: SYSTEM SPECIFICATIONS

System Type:

☐ Standard Deep Well

☐ Small Diameter Deep Well

☐ Surface Mounted Shallow Well

☐ Chlorinated

☐ Viscous Oil

Power Requirements

___ HP

___ Voltage

___ Phase

___ Amps

Fuses:

____F1, ____ F2, ____F3

Lengths & Dimensions:

Fits in _____ inch diameter wells

____ft. Sensor Cable

____ft. Start Cord

____ft. Tankfull Cable

Serial No._____

P.I.D.No._____

Inspected By:_____

GROUNDING INSTRUCTIONS

WARNING: FAILURE TO READ AND IMPLEMENT THE FOLLOWING INSTRUCTIONS COULD RESULT IN DAMAGE TO EQUIPMENT AND INJURIES TO PERSONNEL.

The control panel of the system accompanying this manual is equipped with a grounding lug for attachment of an external ground wire. It is very important that this lug - painted green for easy recognition - be wired to grounded conduit or other verified ground. The ground wire must be 12 gauge or larger.

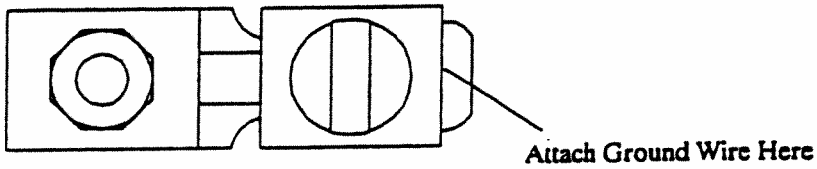

DETAIL OF THE GROUNDING LUG PROVIDED ON ALL NEW ORS CONTROL PANELS.

In addition, it has come to our attention that power plugs on some ORS pumps and panels may have been incorrectly serviced in the field. This situation could cause improper grounding resulting in potential danger to personnel and property.

We urge the immediate examination of all power cord plugs to assure proper connection of the ground wire. This wire must be inserted between the aluminum clamp and the ground terminal of the plug - NOT between the copper grounding shield and the aluminum clamp. For further information, refer to the diagram below and the instruction sheet printed on the back of this notice.

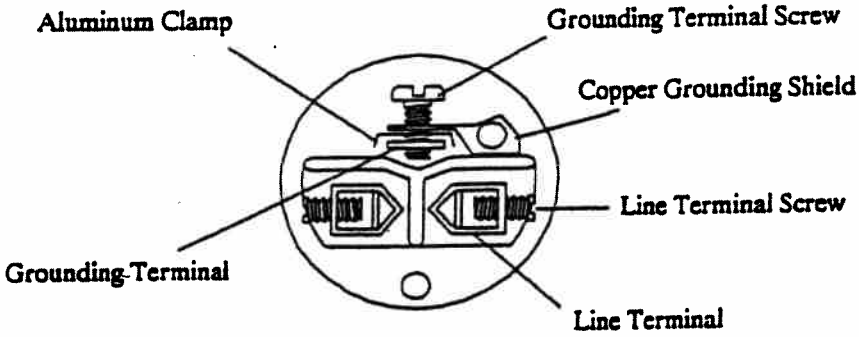

DETAIL OF 115V PLUG WIRING. Wiring of 230V plugs is the same except for the orientation of the line terminals.

ARK-GARD™2 ENP PLUG AND ENR RECEPTACLE

INSTRUCTIONS FOR INSTALLATION, OPERATION AND MAINTENANCE

APPLICATIONS

These plugs and receptacles are designed for use where power is to be supplied to electrical equipment in hazardous and/or corrosive environments.

They will supply 15 and 20 amperes at either 125 or 250 volts AC in:

Class I, Groups C and D; Class II, Group G locations while mounted on single or double gang EDS boxes.

Class I, Group B locations while mounted on single gang only EDS box equipped with EYS sealing fittings mounted immediately adjacent to the box.

ENR should not be mounted on multi-gang modular control device bodies.

The ENR receptacle can be operated only by an ENP plug but that plug can be used in any matching standard NEMA receptacle located in ordinary locations. See Table I on next sheet for listing of receptacles and matching plugs.

HOW TO INSTALL

PLUG

Use #12 or #14 AWG type S, SO, ST, or STO cable with range of .560 to .635 inches diameter. DO NOT use cable of smaller diameter.

Loosen two screws (#4-40 x 5/8" long) in plug face and remove insulator/contact assembly, insulating sleeve, and cable strain relief clamp. Note orientation of fiber insulator before complete removal. (See Figure 1.) Be careful not to lose the mounting screws.

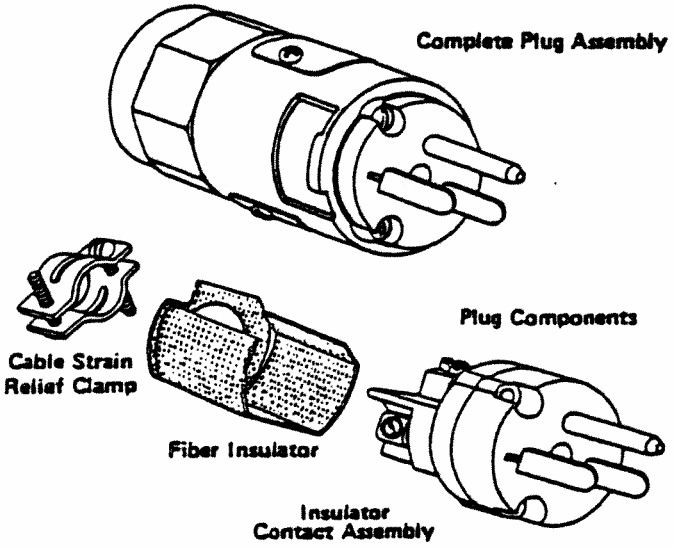

FIGURE 1.

Feed unprepared cable through plug shell from bushing end. Push shell well away from cable end. Now slip on the cable strain relief clamp and insulating sleeve in that order. Slide them away from the cable end also.

Strip cable sheath and wire insulation according to dimensions shown in Figure 2.

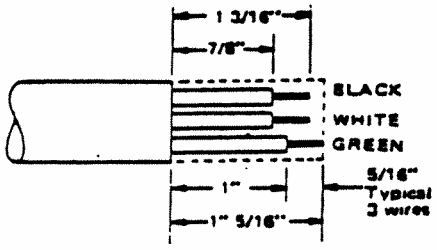

FIGURE 2.

Loosen screws in pressure connectors of all three contacts enough so wire ends can be inserted between connector plates and contact ends. DO NOT put wire ends under pressure screws.

CAUTION: Be sure grounding strap is located in proper position—See Figure 3.

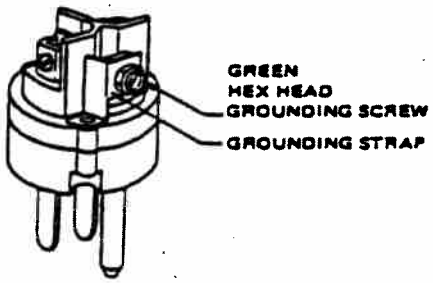

FIGURE 3.

Check to be sure black wire end is in bronze connector, white wire end is in cadmium-plated connector and green wire end is in connector having grounding strap and green screw, then tighten screws securely — to 20 inch/pounds torque.

Slide insulating sleeve down so it rests on the contacts insulator body. See Figure 4.

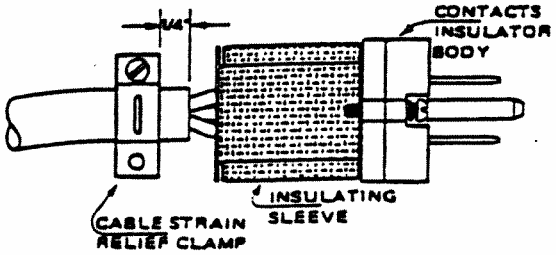

FIGURE 4.

Next position cable strain relief clamp so that it is 1/4" from end of cable jacket and tighten two screws to 15 inch-pounds torque. See Figure 4.

Finally pull plug shell down cable, while being careful to align insulating sleeve and insulator contact assembly into the correct position so screws will engage. There is only one correct position. Tighten two assembly screws to 8 inch-pounds torque.

NOTE: Face of insulator will protrude 1/16" beyond plug shell when it is fully seated.

ARK-GARD™2 ENP PLUG AND ENR RECEPTACLE

INSTRUCTIONS FOR INSTALLATION, OPERATION AND MAINTENANCE

APPLICATIONS

These plugs and receptacles are designed for use where power is to be supplied to electrical equipment in hazardous and/or corrosive environments.

They will supply 15 and 20 amperes at either 125 or 250 volts AC in:

Class I, Groups C and D; Class II, Group G locations while mounted on single or double gang EDS boxes.

Class I, Group B locations while mounted on single gang only EDS box equipped with EYS sealing fittings mounted immediately adjacent to the box.

ENR should not be mounted on multi-gang modular control device bodies.

The ENR receptacle can be operated only by an ENP plug but that plug can be used in any matching standard NEMA receptacle located in ordinary locations. See Table I on next sheet for listing of receptacles and matching plugs.

HOW TO INSTALL

PLUG

Use #12 or #14 AWG type S, SO, ST, or STO cable with range of .560 to .635 inches diameter. DO NOT use cable of smaller diameter.

Loosen two screws (#4-40 x 5/8" long) in plug face and remove insulator/contact assembly, insulating sleeve, and cable strain relief clamp. Note orientation of fiber insulator before complete removal. (See Figure 1.) Be careful not to lose the mounting screws.

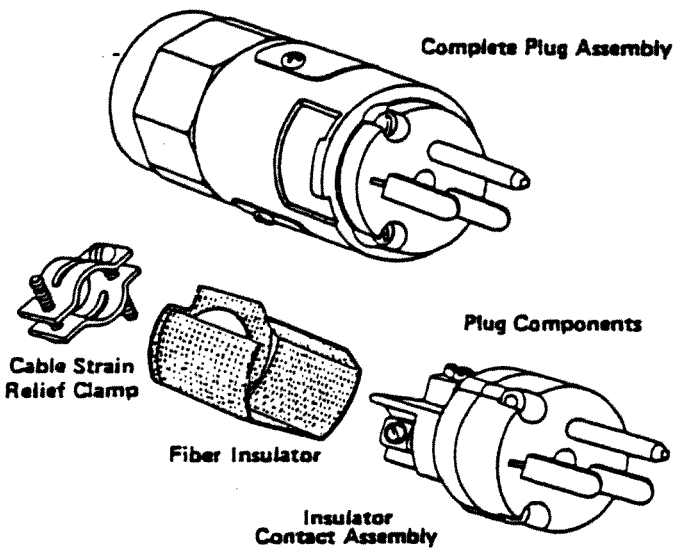

FIGURE 1.

Feed unprepared cable through plug shell from bushing end. Push shell well away from cable end. Now slip on the cable strain relief clamp and insulating sleeve in that order. Slide them away from the cable end also.

Strip cable sheath and wire insulation according to dimensions shown in Figure 2.

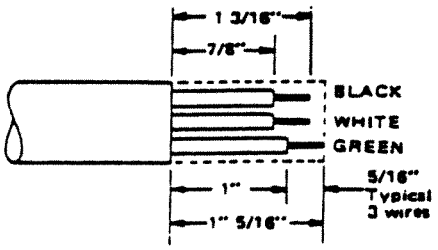

FIGURE 2.

Loosen screws in pressure connectors of all three contacts enough so wire ends can be inserted between connector plates and contact ends. DO NOT put wire ends under pressure screws.

CAUTION: Be sure grounding strap is located in proper position—See Figure 3.

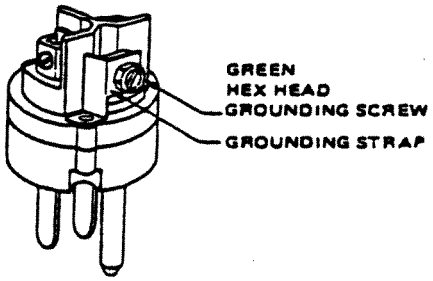

FIGURE 3.

Check to be sure black wire end is in bronze connector, white wire end is in cadmium-plated connector and green wire end is in connector having grounding strap and green screw, then tighten screws securely – to 20 inch/pounds torque.

Slide insulating sleeve down so it rests on the contacts insulator body. See Figure 4.

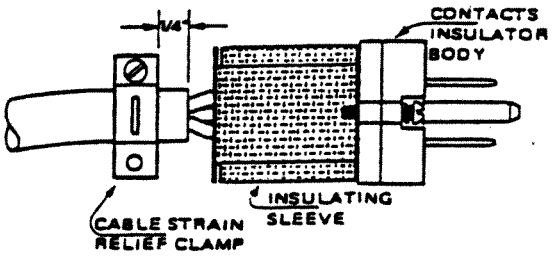

FIGURE 4.

Next position cable strain relief clamp so that it is 1/4" from end of cable jacket and tighten two screws to 15 inch-pounds torque. See Figure 4.

Finally pull plug shell down cable, while being careful to align insulating sleeve and insulator contact assembly into the correct position so screws will engage. There is only one correct position. Tighten two assembly screws to 8 inch-pounds torque.

NOTE: Face of insulator will protrude 1/16" beyond plug shell when it is fully seated.

GROUNDING INSTRUCTIONS

WARNING: FAILURE TO READ AND IMPLEMENT THE FOLLOWING INSTRUCTIONS COULD RESULT IN DAMAGE TO EQUIPMENT AND INJURIES TO PERSONNEL.

The control panel of the system accompanying this manual is equipped with a grounding lug for attachment of an external ground wire. It is very important that this lug - painted green for easy recognition - be wired to grounded conduit or other verified ground. The ground wire must be 12 gauge or larger.

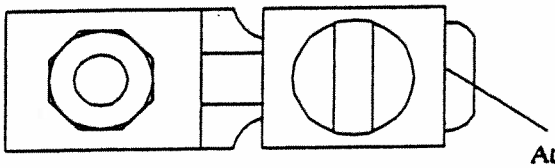

DETAIL OF THE GROUNDING LUG PROVIDED ON ALL NEW ORS CONTROL PANELS.

In addition, it has come to our attention that power plugs on some ORS pumps and panels may have been incorrectly serviced in the field. This situation could cause improper grounding resulting in potential danger to personnel and property.

We urge the immediate examination of all power cord plugs to assure proper connection of the ground wire. This wire must be inserted between the aluminum clamp and the ground terminal of the plug - NOT between the copper grounding shield and the aluminum clamp. For further information, refer to the diagram below and the instruction sheet printed on the back of this notice.

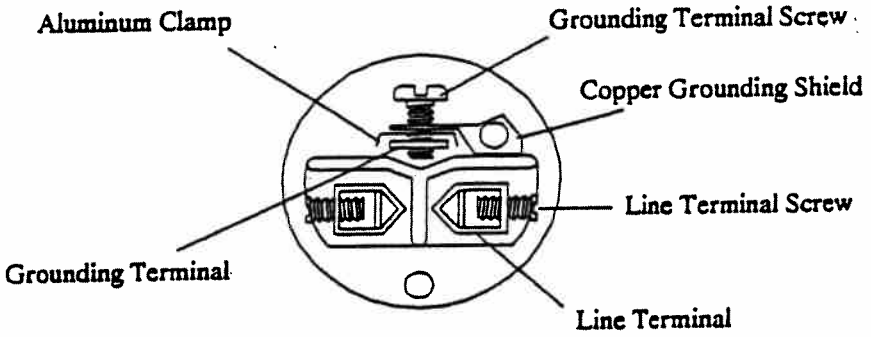

DETAIL OF 115V PLUG WIRING. Wiring of 230V plugs is the same except for the orientation of the line terminals.

TABLE OF CONTENTS

PREFACE ..... p.i
ABOUT THIS MANUAL ..... p.i
ADDITIONAL DOCUMENTATION REQUIRED ..... p.i
WHO SHOULD READ THIS MANUAL ..... p.i
DOCUMENTATION CONVENTIONS ..... p.iii
FOR MORE INFORMATION ..... p.iii

CHAPTER 1. INTRODUCTION p.1-1

CHAPTER 2. SYSTEM DESCRIPTION p.2-1

CHAPTER 3. SYSTEM SET UP p.3-1

CHAPTER 4. SYSTEM DEPLOYMENT p.4-1

CHAPTER 5. SYSTEM MAINTENANCE p.5-1

CHAPTER 6. SYSTEM TROUBLESHOOTING p.6-1

PREFACE

ABOUT THIS MANUAL

This manual contains all the information required to deploy an ORS Probe Scavenger™ system for 4" diemter wells. The manual also contains procedures for maintaining and troubleshooting the pumps and probes.

ADDITIONAL DOCUMENTATION REQUIRED

- ORS SITEPRO 2000 Probe Scavenger™/Water Pump Control Panel Manual.

In addition to this Probe Scavenger™/Water Pump manual, you will need the manual supplied with the ORS SITEPRO™ 2000 control panel. The ORS SITEPRO™ manual provides detailed procedures for mounting and wiring the panel, and includes important information on pump operation.

WHO SHOULD READ THIS MANUAL

This manual is intended for field technicians, project engineers or anyone responsible for installing, operating or maintaining site remediation equipment.

WHAT YOU SHOULD KNOW BEFORE STARTING

If you are installing your ORS Probe Scavenger™/ Water Pump with an ORS SITEPRO™ control panel, be sure to read the entire ORS SITEPRO™ manual before installing or attempting to operate the pump.

DOCUMENTATION CONVENTIONS

This manual uses the following conventions to present information:

An exclamation point icon indicates a WARNING of a situation or condition that could lead to personal injury or death. You should not proceed until you read and thoroughly understand the WARNING message.

A raised hand icon indicates CAUTION information that relates to a situation or condition that could lead to equipment malfunction or damage. You should not proceed until you read and thoroughly understand the CAUTION message.

A note icon indicates NOTE information. Notes provide additional or supplementary information about an activity or concept.

FOR MORE INFORMATION

If you need additional information on this or any other Geotech product, you can contact our Sales or Technical Support staff at:

Geotech Environmental Equipment Inc.
8035 East 40th Avenue
Denver, CO 80207
Toll Free Phone: 800-833-7958
Commercial Phone: 303-320-4764
Fax: 303-322-7242

CHAPTER 1: SYSTEM INTRODUCTION

Chapter Summary

This chapter contains the following information:

- ***Introduction*** *- An overview of the system.*

INTRODUCTION

The ORS Product Pump System is used to recover hydrocarbons in wells 4" or more in diameter.

This system will recover product and pump it out to a collection container.

Used in conjunction with the probe, this system provides automatic recovery of hydrocarbons.

The system is completely grounded and explosion-proof for use in hazardous areas when the pump is fully submerged in liquid.

CHAPTER 2: SYSTEM DESCRIPTION

Chapter Summary

This chapter contains the following installation instructions:

- ***System parts***

The ORS Product Pump System consists of 3 basic parts:

A) Submersible Pump Assembly (Product only).

B) Pump Control Module (Product only).

C) Probe (Product only).

A) Submersible Product Pump/Motor Assembly

This assembly consists of a product pump/motor housed in a stainless steel jacket.

The power cord is encased in urethane.

There are two brass fitting on the top of the product pump. The longer fitting is the intake inlet, the shorter one is the output fitting with the check valve.

Connected to the intake inlet is the intake strainer. This strainer is a two stage strainer that will protect the pump from damaging debris. The two stage strainer consists of a coarse 60 mesh outer strainer with a fine 100 mesh inner strainer. The outer strainer is an extension of a cylindrical stainless steel shell into which the inner strainer is threaded. This outer shell design allows a maximum amount of the inner strainer surface area to be utilized during operation. (See Chapter 5. for maintenance).

Between the two fittings, the intake and output, is a lift ring, to which the winch cable is to be attached. This will allow the system to be raised and lowered into the well site easily.

SUBMERSIBLE PUMP/MOTOR ASSEMBLY

The product pump/motor is a magnetically coupled gear pump system. It is a direct current model good for continuous duty up to 5 amps at 12 VDC. Decoupling of the pump/motor should not occur up to pressures of

70 psi. Some factors which can tend to reduce the decoupling pressure are temperatures higher than 75 degrees F, greater viscosities than which water has, abrasive fluids, pump wear, etc.

The pump is water cooled, so it is necessary to fill the stainless steel jacket with water before operating this system.

B. Pump Control Module

The product pump control system provides the user with many options to best suit his recovery needs. It is completely explosion proof: Group D, Class I, Division I, and meets intrinsic safety standards.

Referring to Figure 3, the controls are as follows:

HAND- pump is on regardless of probe sensing conditions. The tankfull will override.

OFF - pump is off regardless of probe sensing conditions.

AUTO - pump is on only when the probe is in contact with product.

PROB - sounds an alarm to give product and interface readings; will not run product pump but will run water pump.

Green Light (LED) : Light turns on when pump is "ON".

Red Light (LED) : When blinking, it indicates that the float in the probe is in the up position.

When continuously on, it indicates that the recovery tank is full. This signal is received from the tank full. When the float on the tank full rises, the pump will not operate and thus avoids overfilling the recovery tank.

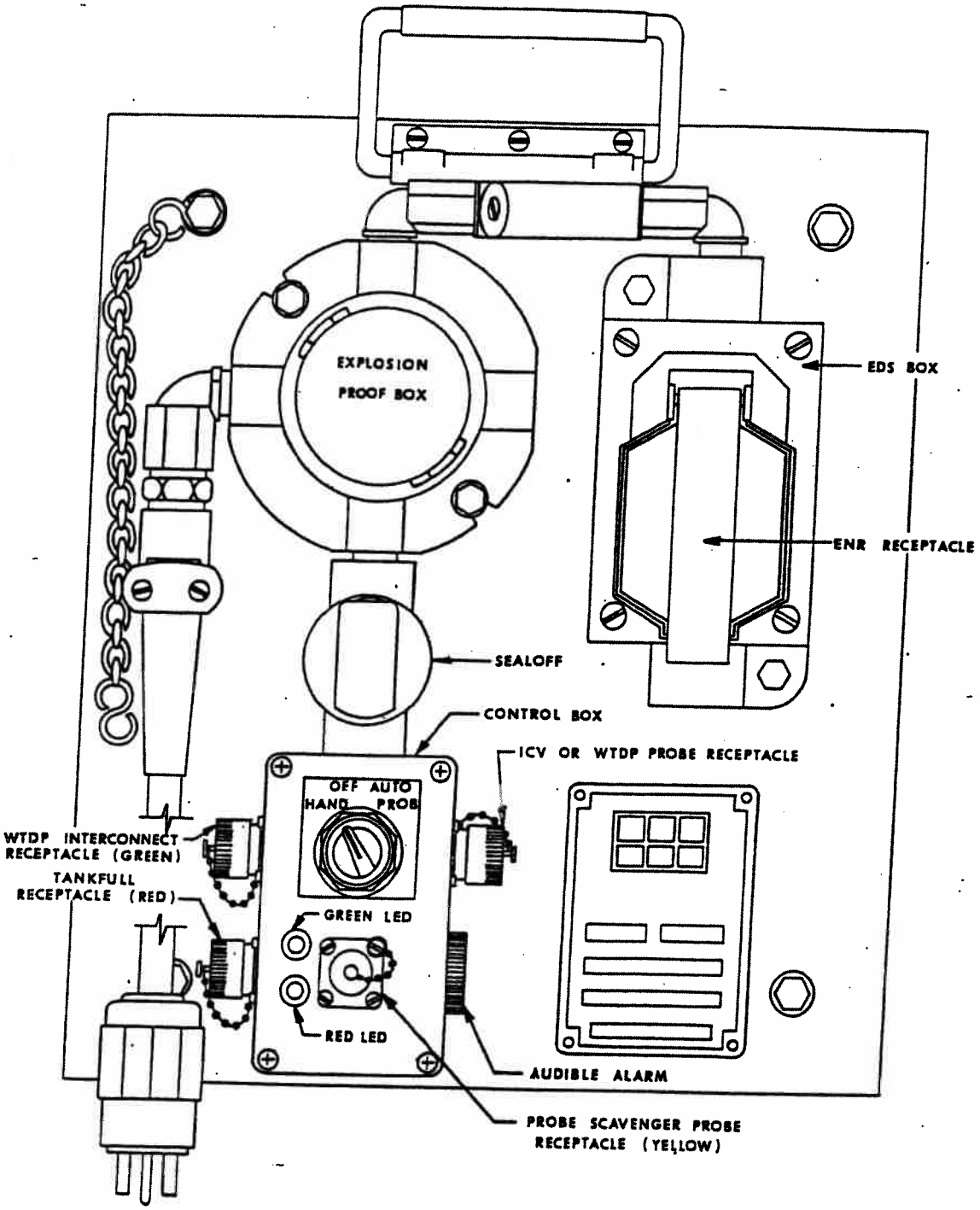
EXPLOSION
PROOF BOX
EDS BOX
ENR RECEPTACLE
SEALOFF
CONTROL BOX
ICV OR WTDP PROBE RECEPTACLE
OFF AUTO
HAND PROB
WTDP INTERCONNECT
RECEPTACLE (GREEN)
TANKFULL
RECEPTACLE (RED)
GREEN LED
RED LED
AUDIBLE ALARM
PROBE SCAVENGER PROBE
RECEPTACLE (YELLOW)

FIGURE 2-1.

Water Selector Switch (inside round explosion proof box) : selects water override feature either as HI-LO (white knob towards C1 side) or HI time delay (white knob towards C2 side).

Float Time Delay Potentioniometer (inside control box) : sets time delay to turn on pump, activated when float in probe rises.

Audible Alarm : an oscillating tone (beep) indicates the water override is on; a continuous tone in the AUTO position indicates the water override is on and the float is up.

Tank Full Receptacle : 7 pin receptacle for recovery tank full float color coded red.

PS/WTDP Interface Receptacles : Two 7 pin receptacles for interface cable to Water Table Depression Pump (WTDP) or Interface Control Valve (ICV) - color coded green and no color.

Probe Receptacle : 7 pin receptacle on top of control box for the probe - color coded yellow. The above controls/connectors are located on the pump control module/control box. See Figure 3.

C. Probe Assembly

The probe is 1 1/8" in diameter and 12" long (not including cone top). 100' of cable is supplied with the probe. At the end of the cable is a 7 pin connector. A hanger is provided for the probe to hold it at the desired depth inside the well.

Product Probe

HI Sensor: Water sensor that gives a signal to the water alarm and inhibits the product pump from running when it is in water.

LO Sensor: Water sensor that is 4" below the Hi sensor. The LO sensor "Latches" on when the HI sensor senses water and the water selector switch is in Hi-LO position.

Float: A small cylinder with a magnet which turns on either the AUTO reed switch to run the product pump for sensing interface and product level. The AUTO reed switch is 2 1/4" above the HI sensor.

CHAPTER 2: SYSTEM DESCRIPTION

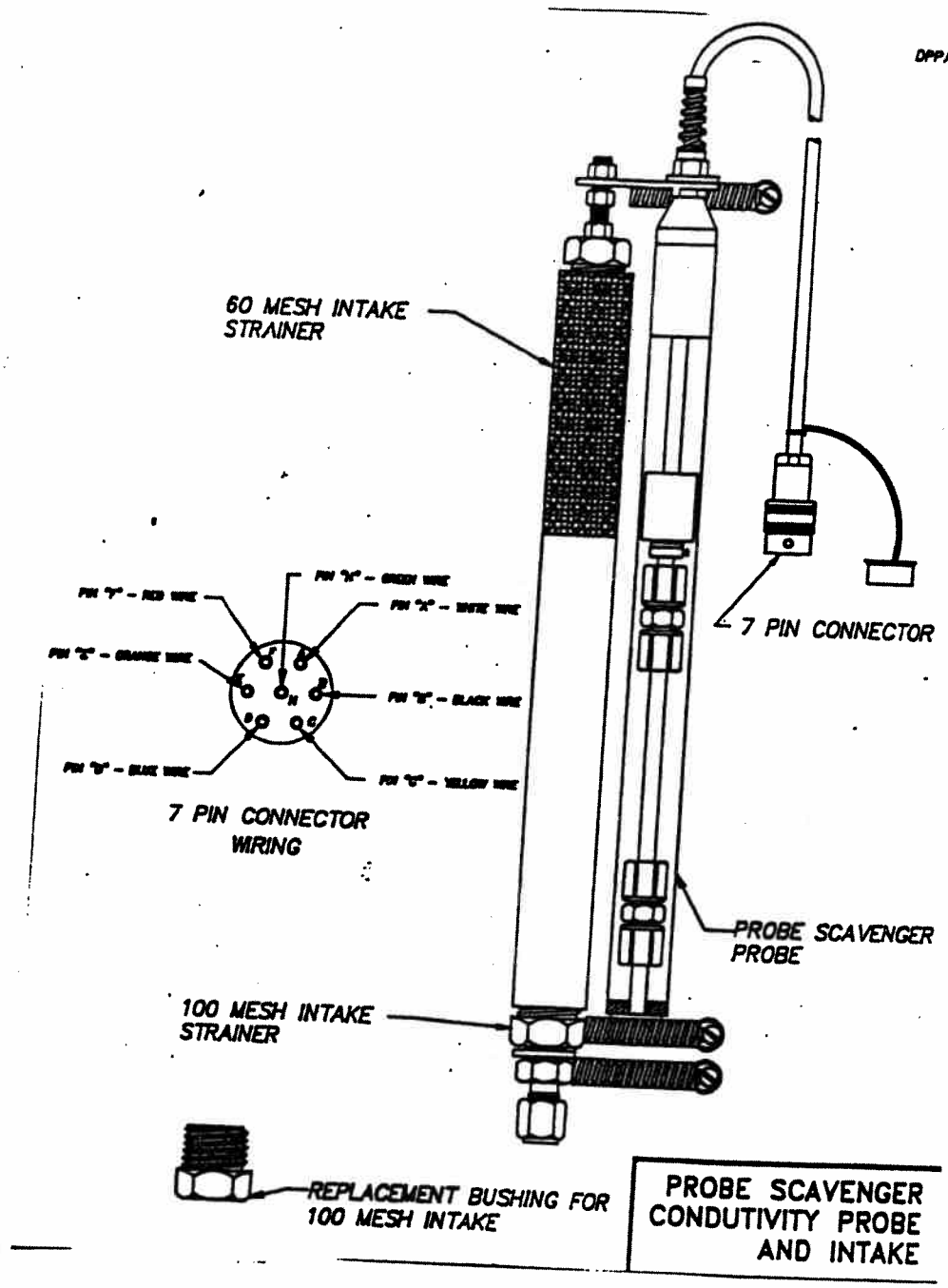
DPPAGE14
60 MESH INTAKE STRAINER
7 PIN CONNECTOR
7 PIN CONNECTOR WIRING
PROBE SCAVENGER PROBE
100 MESH INTAKE STRAINER
REPLACEMENT BUSHING FOR 100 MESH INTAKE
PROBE SCAVENGER CONDUTIVITY PROBE AND INTAKE

FIGURE 2-2.

CHAPTER 3: SYSTEM SET UP

Chapter Summary
This chapter contains the following information:

- ***Set up** - How to set up the system.*

SYSTEM SET UP

Mount the product probe /intake assembly using the clamps supplied (see Figure 6A).

Cut a piece of 3/8" OD tubing to desired height of product intake. Attach one end of the tubing to the intake inlet on the product pump. Attach the other end of this tubing to the probe/intake strainer.

Use remaining length of tubing for output. Attach one end of the output fitting on the product pump, with the other end into a collection container.

The tank full accessory should now be connected in order to deactivate the product pump when the collection container is full. The unit is supplied with a 3/4" NPT fitting for the standard 55 gallon drum and a 2" NPT fitting for larger tanks. Both fittings are attached and are easily separated.

Adapters are available for other size fittings.

The tank full float will rise up in the collection container when the product is about 4" from the top. The unit is supplied with 25' of cable.

Once the tank full accessory is fitted onto the collection container, insert the connector on the cable into the receptacle of the control box on the ORS Probe Scavenger™ control module. This receptacle is color coded red and is located on the side of the control box. Line up the slot inside the connector with the receptacle, push on and tighten clockwise until it locks by turning back.

Using the same procedure, insert the connector on the probe cable into the control box receptacle of the pump control module.

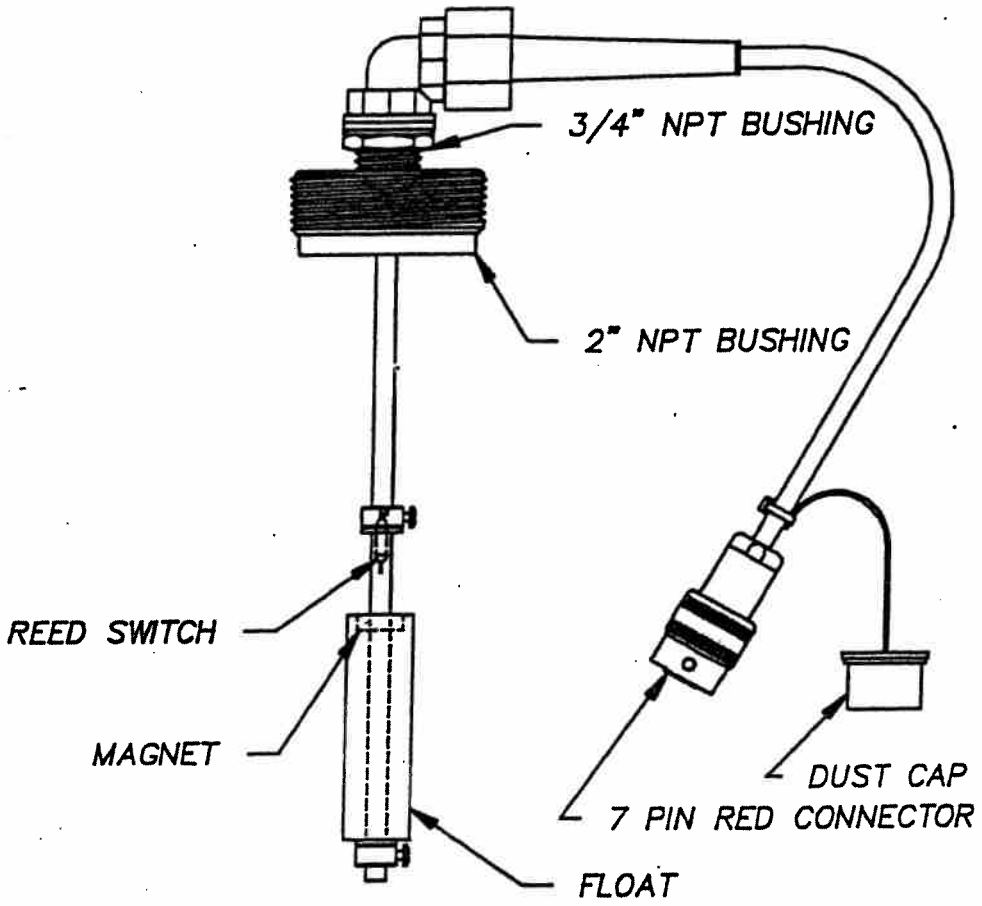

FIGURE 3-1 Tankful Probe

Plug the power cord from the start box into the ENR receptacle on the Pump Control Module.

A. Insert plug into receptacle as far as it will go.

B. Turn plug clockwise as far as it can go. Internal contacts of the receptacle are closed by this action and complete the electrical circuit.

C. Release the plug, allowing it to move slightly outward into a locking detent position. Check it by trying to turn and/or pull out without applying any inward pressure. Plug should not pull out.

D. To remove plug, press inward, turn counterclockwise, and pull straight out.

Set the control switch on the module to "OFF".

Connect the power cord from the control panel to a suitable power source. The system is now ready to be deployed.

CHAPTER 4: SYSTEM DEPLOYMENT

Chapter Summary

This chapter contains the following information:

- ***How to get the system started***

Before the system is deployed it should be set up and tested. This system has two distinct parts: Pump and control (including PCM, probe, tank full). It is best to familiarize yourself with the controls.

1. Mount the control module adjacent to the well. Secure it so there is no chance of it falling into the well. It is easily hung vertically by its handle. For continuous outdoor use the panel should be adequately protected from rain or extreme heat.

2. Connect the tank full accessory. This is a small override float which turns off the system when it has filled a recovery tank. The tank full cable fits into the side of the control box. Its red 7 pin plug fits into the red 7 pin receptacle. There's a slot on this receptacle at its top. Line up the plug, push the connector and tighten it clockwise until it locks into position.

3. Connect the probe. It fits into the top off the control box; it's also a 7 pin plug/receptacle. Both are color coded yellow.

4. Plug the power plug from the PCM into any appropriate power source.

5. Go through HAND, OFF, AUTO and PROB selections. A bucket of water, 12" deep, can be used for demonstration purposes. The product Probe partially submerged will give an oscillating tone; when fully submerged, there will be a solid tone and a flashing red light in the AUTO or PROB position. Lift up the float on the tank full to simulate a full recovery tank. The red LED should now be lit.

6. When the probe hits product, the LED will flicker RED. When it contacts water, the alarm will give a steady tone and the LED will continue to flicker. Re-do the measurement from water to product to air, etc.

7. Leave the control switch to AUTO. This position is for running the pump. Although the pump is not as yet hooked up, the green LED will show when the pump will be running.

8. Take the probe out of the bucket and turn it upside down so that the blue float travels to the top.

The red LED on the control box flashes for approximately 45 seconds, then the green LED lights up indicating the pump is running. The red, LED will remain flashing as long as the blue float is up.

9. Put the probe in water; note that the audible alarm beeps, but the pump doesn't run. The water Selector Switch (WSS) has been set on HI-LO (C1). This switch is inside the round explosion proof box on the control panel.

The beeping audible alarm now stays on when the probe is raised a few inches because the LO sensor has been "latched" on.

10. Unplug the power plug of the panel; unscrew the round explosion proof box cover; carefully switch the WSS white selector knob to C2. This takes the LO sensor out of the circuit and adds a five second time delay in turning off the water alarm. This time when the Hi sensor is raised out of the water the audible tone stops after approximately 5 seconds.

11. Lift the tank full float up; the red LED stays on continuously, preventing all control functions from working.

12. Once again the control functions are summarized below:

HAND - pump is powered regardless of probe sensing conditions.

OFF - pump is off regardless of sensing conditions.

AUTO - pump is on only when the probe is in contact with product and time delay has cycled.

PROB - probe function does work with small diameter probes.

Now let's look at the two Water Selector Switch (WSS) options.

HI-LO: As the product level builds up in the well, the following sequence occurs:

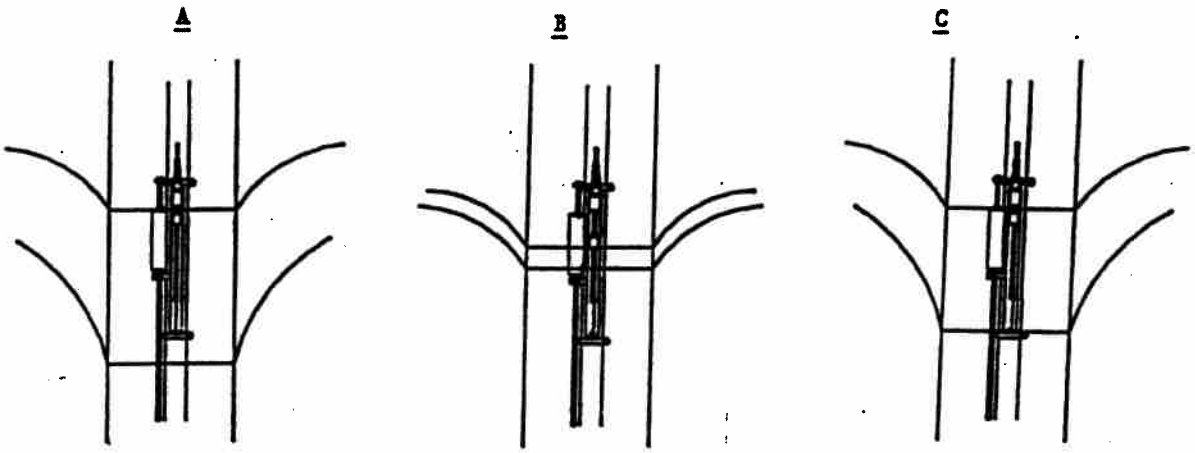

Product Pump turns on

As product level drops, the product-water interface rises, because the product head is no longer pushing down on water.

More product re-enters the well.

When C is reached, the float is up and there is no water sensed; hence the pump turns on returning the situation to A. Key to the sequence is that as product builds up it pushes the interface down. When the product/water interface reaches the LO sensor (and if the float has been up for 45 seconds), the system turns on, pumping out the product and allowing the interface to rise.

The location of the probe relative to the pump intake is critical; positioning too high means more water intake; too low will cause the system to suck air. When assembled, the bottom of the intake strainer should be level with the bottom of the top stop collar. See Figure 6A.

2. Time Delay

The second option on AUTO is to use the HI-Time Delay (WSS to C2). Now the sequence of events, described previously, is the same except the water must only drop below the HI probe for 5-15 seconds and the float be up for 45 seconds. This is more sensitive than HI-LO because it takes only an inch of product to activate the pump. Again the HI-LO, HI time delay switch is inside the explosion proof box, so the power must be off to change the selection.

Make the following connections to the control box receptacles (all connectors and receptacles are color coded for quick reference). PS probe is color coded yellow, the tank full is color coded red.

When connecting the tank full unit make sure that the float is down

Set the WSS on C2 (HI time delay) and the control box switch on the PROB position. Plug the product pump into the 230V receptacle on the panel and plug the panel into a 230V, 1 power source. Attach the PS probe to the intake strainer as detailed.

Slowly lower the pump into the well until the audible alarm sounds, making sure not to put any strain on the probe control cable or the power cord. Now pull the system up until the alarm just stops. This means that the probe/intake set up is located just above the interface level. The best location for the Product System is midway between these two levels, i.e., midway between the product/water interface and top of the product. The reason being that when the Product System turns on, the air/product interface will rise.

Turn the control switch to AUTO. If the red LED is flashing, this means the float is up in product and pump will turn on in approximately 45 seconds. After the pump cycles once, the height may have to be reset slightly due to stretching of the cable under load.

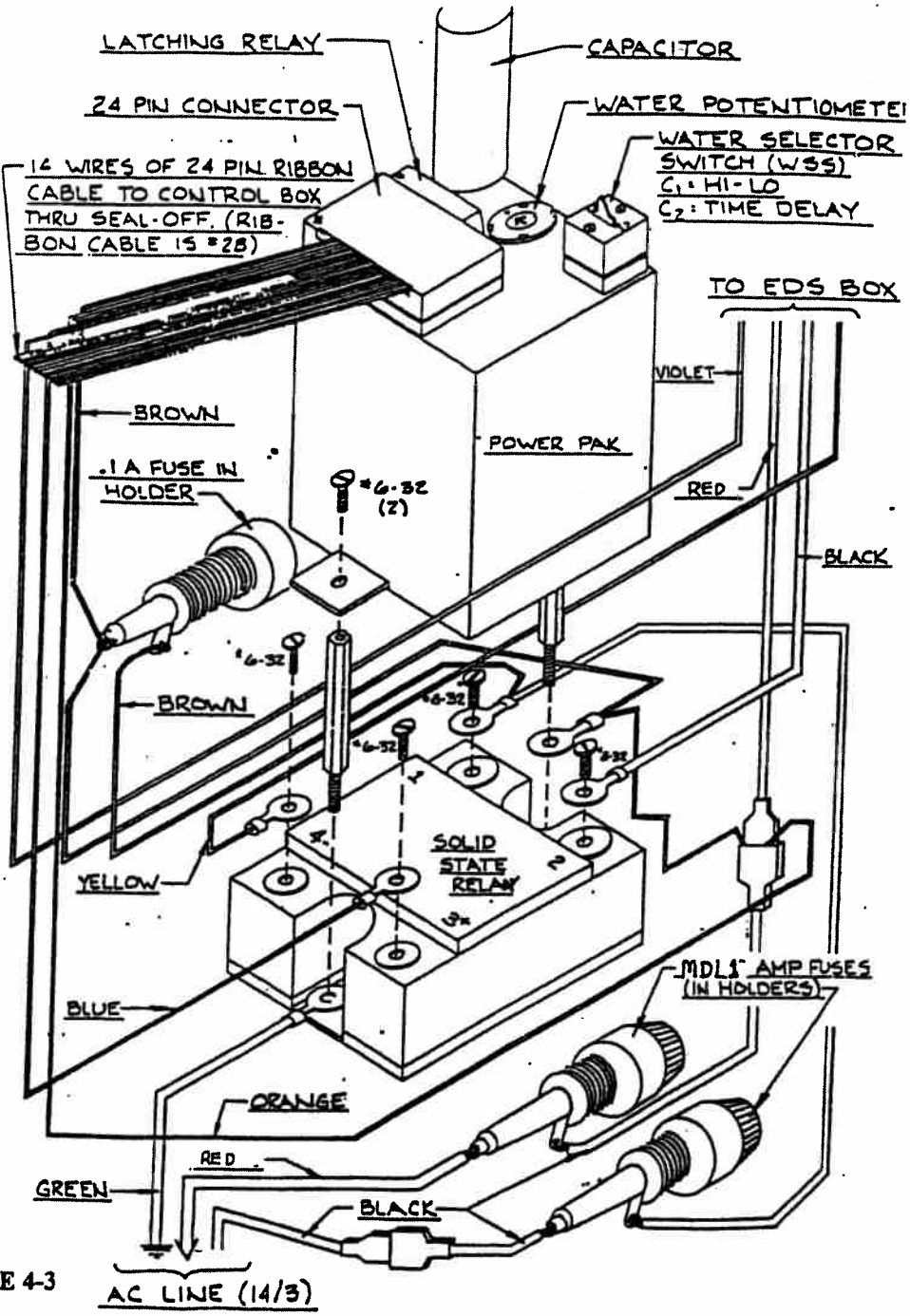
LATCHING RELAY
CAPACITOR
24 PIN CONNECTOR
WATER POTENTIOMETE
WATER SELECTOR SWITCH (WSS)
C1: HI-LO
C2: TIME DELAY
14 WIRES OF 24 PIN RIBBON CABLE TO CONTROL BOX THRU SEAL-OFF. (RIBBON CABLE IS #28)
TO EDS BOX
VIOLET
BROWN
POWER PAK
.1 A FUSE IN HOLDER
#6-32 (2)
RED
BLACK
#6-32
BROWN
SOLID STATE RELAY
YELLOW
MDL1 AMP FUSES (IN HOLDERS)
BLUE
ORANGE
RED
GREEN
BLACK
AC LINE (14/3)

FIGURE 4-3

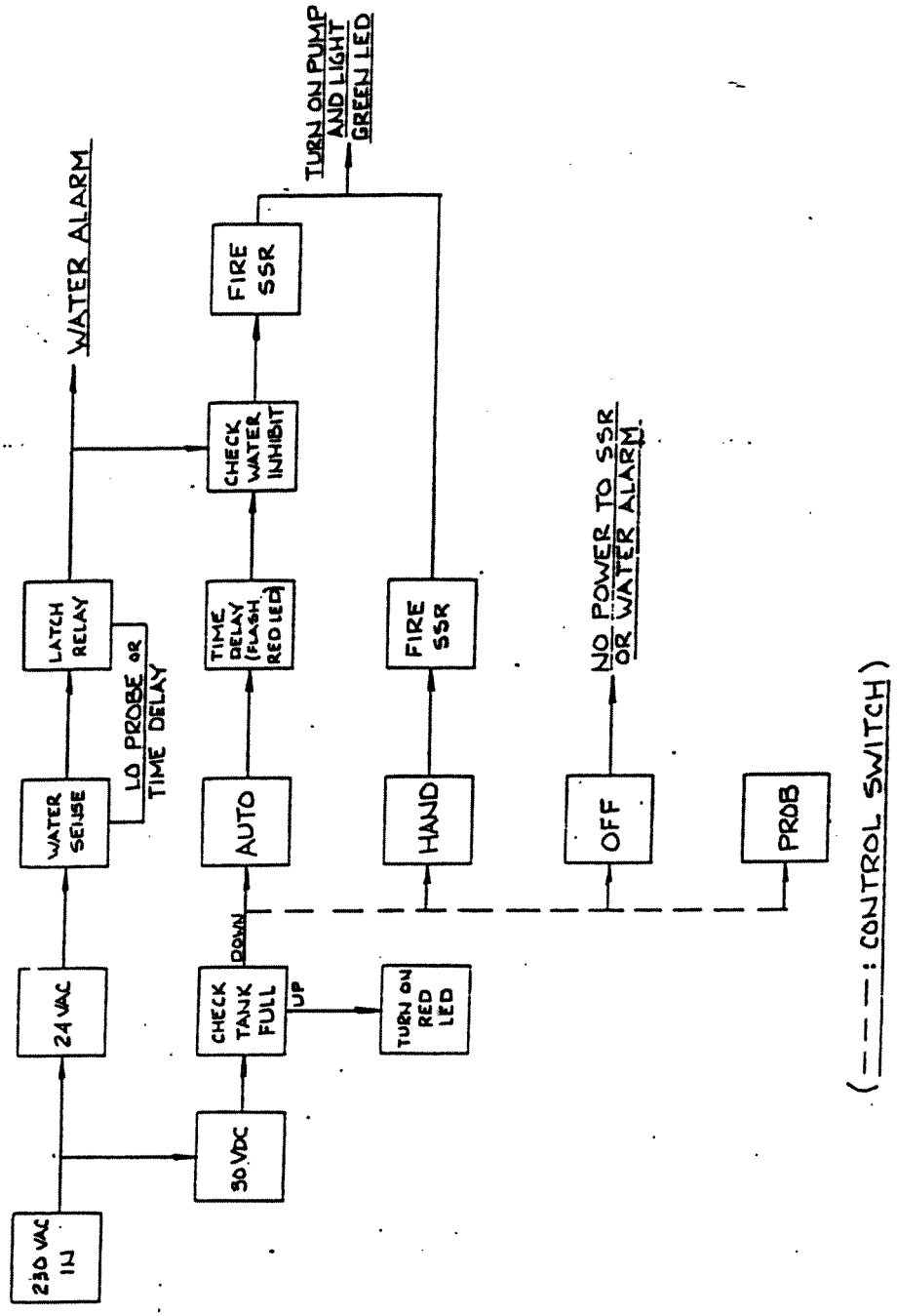

FIGURE 4-4. 24 Pin Ribbon Cable

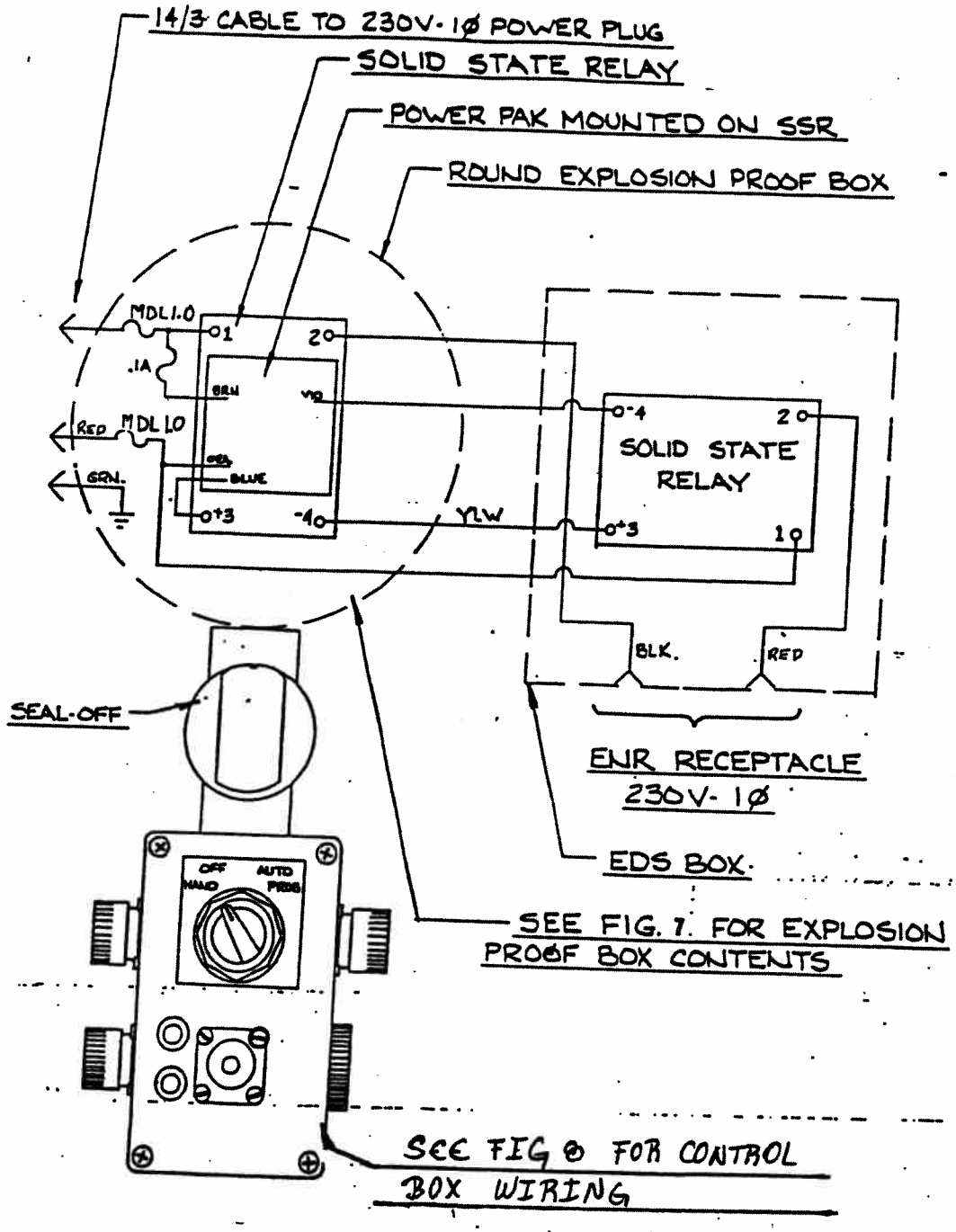
14/3 CABLE TO 230V-1Ø POWER PLUG
SOLID STATE RELAY
POWER PAK MOUNTED ON SSR
ROUND EXPLOSION PROOF BOX
MDL1.0
.1A
RED
MDL 1.0
GRN.
GRN
YLW
BLUE
YLW
SOLID STATE RELAY
BLK.
RED
SEAL-OFF
ENR RECEPTACLE
230V-1Ø
EDS BOX
OFF
AUTO
HAND
PRES
SEE FIG. 7. FOR EXPLOSION PROOF BOX CONTENTS
SEE FIG 8 FOR CONTROL BOX WIRING

FIGURE 4-5.

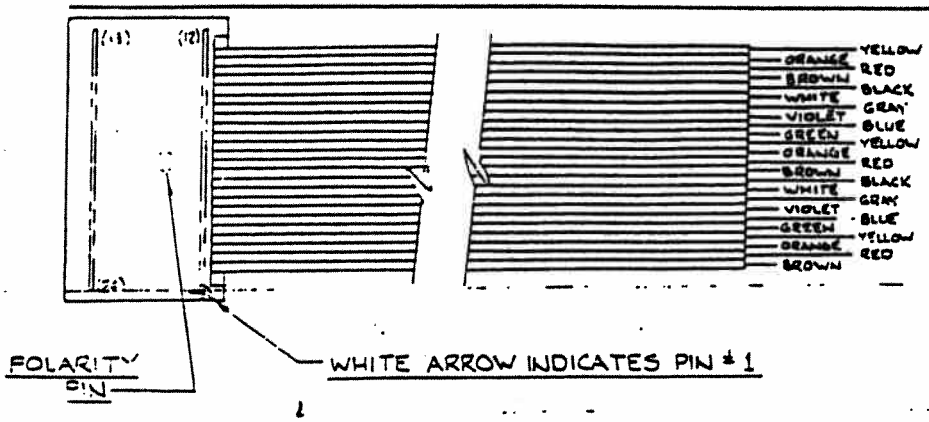

COLOR & USAGE CODE			
PIN NO.	WIRE COLOR	USAGE	LOCATION
1	BROWN	AC +	EXPLOSION PROOF BOX
24	RED	———	
2	ORANGE	AC -	
23	YELLOW	———	
3	GREEN	———	
22	BLUE	SSR +	
4	VIOLET	SSR -	
21	GRAY	———	
5	WHITE	———	
20	BLACK	———	
6	BROWN	PUMP RUN-RETURN	THROUGH SEAL-OFF TO CONTROL BOX
19	RED	POWER	
7	ORANGE	OUT- PIN 7 LATCH RELAY	
18	YELLOW	WATER RETURN	
8	GREEN	GROUND	
17	BLUE	POWER RETURN	
9	VIOLET	CAP. TIME DELAY +	
16	GRAY	GREEN LED RETURN	
10	WHITE	LO PROBE	
15	BLACK	HI PROBE	
11	BROWN	CAP. TIME DELAY -	
14	RED	ANODE SCR	
12	ORANGE	CATHODE SCR	
13	YELLOW	———	

FIGURE 10 B
24 PIN RIBBON CABLE

FIGURE 4-6.

END VIEW OF PROBE 7 PIN CONNECTOR

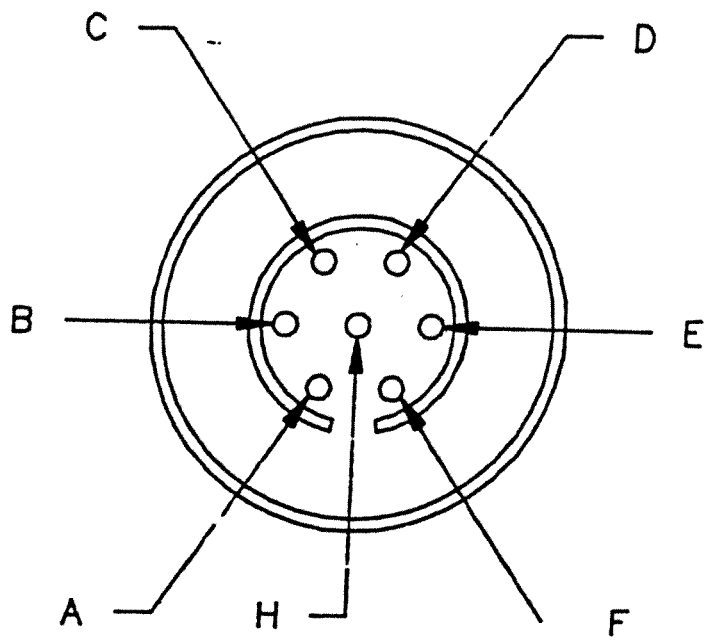

FIGURE 4-7. Using an ohmmeter on the R x 10 scale, the Probe can be tested as shown on the following page.

Probe In Air	Probe Upside Down In Air or Fully Submerged In Product	Conductivity Probe In Water			Float Probe In Water		
		Fully Submerged	Submerged Just Above HI Sensor	Submerged Just Above LO Sensor	Fully Submerged	Submerged Just Above HI Sensor	Submerged Just Above LO Sensor
A-C Open	Open	≈ 20,000Ω	≈ 20,000Ω	Open	Short	Short	Open
B-C Open	Open	≈ 20,000Ω	≈ 20,000Ω	≈ 20,000 Ω	Short	Short	Short
C-H Open	Open	Open	Open	Open	Open	Open	Open
E-H Open	Short	Short	Open	Open	Short	Open	Open

CHAPTER 5: SYSTEM MAINTENANCE

Chapter Summary

This chapter contains the following information:

- ***Taking care of the parts***

1. PUMP/WATER

The pump is a Tuthill pump with a 12 VDC motor. The transformer, capacitor, and fuse are located in the rain tight and explosion proof box, a few feet from the plug of the pump. No maintenance is necessary.

2. PANEL PUMP CONTROL MODULE (PANEL)

On each panel, the electronic controls are housed in the round explosion proof junction box next to the cable receptacle. This box has been factory sealed. No maintenance is necessary. Fuses and a probe sensitivity adjustment are in this explosion proof box.

3. PROBES

Every week the probe should be rinsed in clean fuel and/or hot water to prevent any material build up or clogging.

4. INTAKE STRAINER

The two stage strainer can be easily disassembled for cleaning. This should be done periodically to insure that the pump will run dry. Time elapsed between strainer cleanings will depend on well conditions. In the event that frequent strainer cleanings are not considered a cost effective maintenance procedure, another option is available. The inner 100 mesh strainer can be removed and by using the threaded reducer bushing provided, the 60 mesh outer strainer can be used alone. However, the long term effects to the pump must be considered when the 100 mesh inner strainer is not used. Pumping damaging debris will quickly diminish the gear pumps performance, lead to pump rebuilding and/or replacement, and overall down time of the system.

With proper usage and servicing the two stage intake strainer should substantially increase the life of the pump.

CHAPTER 6: SYSTEM TROUBLESHOOTING

Chapter Summary

This chapter contains the following information:

- ***Getting Help*** *- What do to before calling Geotech for assistance*
- ***Troubleshooting procedures*** *- How to determine if your system requires service*

1. Product Pump/Motor

Pump does not run: If the pump does not run with the control knob on HAND (Green LED on), plug the pump's plug directly into a suitable power source, by-passing the control panel. If:

• the pump now runs, there is a solid state relay or ENR receptacle problem and you should turn to selection C. Problem on HAND position.

• it doesn't run, unplug it and unscrew the round cover off of the appropriate explosion proof box in the pump's power line.

• check the two fuse(s).

If pump still doesn't run, call Geotech for assistance.

Pump runs but doesn't not deliver product: obvious things to check: clogged intake strainer, is the flow valve open, is check valve operating properly?

2. Pump Control Module (PCM) (Yellow Knob)

A) Sub-Assembly Functions: This first paragraph explains the major electronic sub-assemblies and their functions.

Power Pak- The black rectangular, potted assembly which has the 24 pin ribbon socket, the latch relay, the water potentiometer and the capacitor on top. It is found in the round explosion proof box. The power pak converts 230 VAC to intrinsically safe 24 VAC to sense water and hydrocarbons.

Two power fuses and a power pak circuit breaker-Power fuses for the two sides of the 230V line (same amperage as those in the explosion proof box in the pump's line), and a small fuse holder (1/8 amp) are also found

Solid State Relays (SSR) - One in the bottom of the round explosion proof box, switching the black power line. The other is in the bottom of the EDS power receptacle box, switching the white line. These SSR's provide arcless, highly reliable on and off switching of the Product System. Each solid state relay switches one side of the 230V line. Pins 1 and 2 with 8-32 screws and terminals are the powerline and load respectively. Pins 1 and 2 are interchangeable. Pins 3 and 4 with 6-32 screws are on the control side. A label on the relay indicates the necessary DC voltage.

Solid State Relays leak when OFF. This leakage is about 10-15 mA. Thus, a voltmeter cannot be used to tell if a relay is off, unless the relay is connected to a low resistance load.

24 Pin Ribbon Cable-Interconnecting wiring which carries all signals: AC into power pak, DC power out to the control box and DC power for the solid state relays. Seal off-potted conduit which separates explosion proof area and allows use of non-explosion proof control box, switch and receptacles.

Control Box- contains the HAND-OFF-AUTO-PROB selector switch and various encapsulated modules which control audible and visual signals. It contains a Red and Green LED on its cover, and audible alarm on its side, and four color coded 7 pin receptacles.

Most problems are caused by loose components - the 24 pin ribbon cable, latch relay and the water Selector Switch should always be checked. Are there any loose pins? Has a pin broken off?

All encapsulated components, the power pak, and the modules in the control box are virtually indestructable and should function indefinitely.

B) Circuit Explanation

The Product System PCM contains a sophisticated circuit designed to sense product and turn on the pump. The electronics logic system is shown in Figure 8; the ribbon cable connecting the power pak to the control box in Figures 7 & 9; and the control box wiring with the encapsulated modules in Figure 9. The key element is the float and the water sensors. The system runs when the float is up for a certain period of time and there is no inhibit signal from either the water sensors or the tankfull unit.

CHAPTER 6: SYSTEM TROUBLESHOOTING

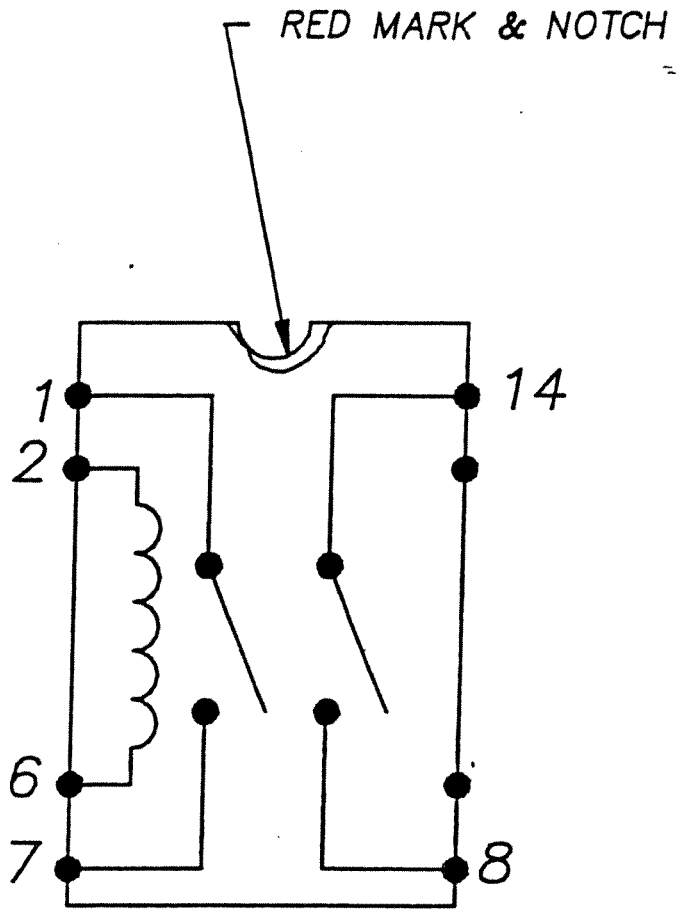

When the SCR fires, voltage is applied across pins 2 & 6 wherein a relay coil closes 1 to 7 and 8 to 14.

FIGURE 6.1. Latching Relay

C) Problems on HAND Position

The HAND position makes the pump run regardless of the location. It is only overridden by the tankfull float being up, (red LED on continuously) or a broken tankfull cable. To check either of these, unplug the red 7 pin tank full plug.

Green LED on, pump does not run: There are two possibilities; the ENR receptacle is broken or one (or both) of the solid state relays are open. Make sure the plug is pushed in, twisted, and pulled back out to insure an explosion proof connection. If this doesn't work, then unplug the power, remove the four screws on the ENR box, lift off the receptacle cover, and check its connection. The solid state relays are devices that switch AC power then a small DC voltage is applied to them. When they are "off" they are not "open" as a mechanical relay, but leak small amounts of current. Hence, with power plugged in, the ENR receptacle must have 230V on it, but the SSR is off. Therefore, a voltmeter is not sufficient to test a SSR.

Referring to Figure 10, the two SSR's inputs are in series when the control switch is on HAND, 5 volts DC are applied to each SSR (the DC is applied to pins 3 and 4 (+ to 3, - to 4.) Pins 3 and 4 have 6-32 screws, pins 1 and 2 (8-32) screws are the power leads (line and load). Pins 1 and 2 are interchangeable.

If the voltage appears across pins 3 and 4 of the SSR and the pump isn't running, then the SSR(s) not switching. To check this, unplug the power and attach the ring terminal from pin 1 to pin 2 of the SSR at a time, thus shorting out the SSR.

If the system now runs when plugged back in, the SSR is open and must be replaced.

A good SSR can be checked with a 9V transistor battery. Obtain a small 9V snap terminal battery and some leads. Remove the SSR from the panel and hook up a light bulb as shown below (a 110V lamp is ok).

The application of a 9 VDC to pins 3+ and 4- of the SSR will turn it on.

If there is no input voltage to the SSR, unplug the power, turn the control switch to HAND, connect the tank full accessory with its float down, disconnect the 24 pin ribbon cable, and check out continuity between pins 6 and 19 (see Figure 7). This line should be a short on HAND. Visually check out the control box wiring. If none of the above works then please contact Geotech.

Green LED off, pump does not run: In this case the control circuitry is not working. First check the 1/8 amp fuse in the explosion proof box and replace it if required. Check to see if the 24 pin ribbon cable is in its socket securely. Are the input wires to pins 3 and 4 of both solid state relays disconnected?

The green LED may open and the solid state relays would still be powered because a zener diode is wired in parallel with the green LED. If either LED needs to be checked, they can be exchanged, i.e., if the red LED works, it can be put into the green LED socket to see if the green LED has failed, and vice versa.

The power pak itself is very reliable. If none of the above work, then check it out by removing the tank full circuit, and with the unit plugged in and the control knob in any position, measure the DC voltage between pin A of the 7 pin receptacle for the tank full and ground.

30 VDC should be obtained. If not, then the power pak is not functioning. If it is, recheck the input to the SSR's, then call Geotech.

D.Problems on AUTO

1. Probe check

Most problems in the AUTO position are a result of an open in the probe line. Figure 4-7 shows the probe and its connections which are:

On and after the time delay the green LED will come on. Red and green LED's may be interchanged to check them out (see previous paragraph on this). The red LED or the green LED in the red LED socket may be checked by lifting up the tankfull float and noting the continuously lit LED.
If both the A-C 20K resistor and shorting wire (E-H) are put in, the red LED will flash and the alarm will be on continuously. Generally the probe will malfunction before the electronics.

CHAPTER 6: SYSTEM TROUBLESHOOTING

A - HI Sensor
B - LO Sensor 4 1/4" below HI Sensor
C & D - shorted together - ground and the stainless steel tube on which the float rides and which forms the other half of the circuit for the conductivity sense.
E - float return on AUTO position.
H - float common.

An open in the A or C line causes the water function NOT to work; there will be neither an audible alarm nor inhibiting of the pump when the probe is in water.

An open in the E or H line will not give a reading from the float rising, hence no flashing red LED or green LED after the time delay.

3. Probe Simulation

The probe can be simulated by using a small shorting resistor and wire (supplied in spare parts bag). The water sense can be simulated by putting the 20K resistor between pins A and C of the 7 pin probe receptacle, as shown on the following page.

This simulates the probe in water. It should cause an oscillating sound from the audible alarm on the side of the control box. If this doesn't happen, check the water sense potentiometer. Turn it slightly counterclockwise, which should cause the alarm to sound. Re-check the 24 pin ribbon cable and the latching relay to be sure that they are securely plugged in. The latching relay fires when the water is sensed. It is shown schematically on the next page.

With the relay in its 14 pin socket, use a voltmeter with 7 pin receptacle (control switch on AUTO).

	Pins 2-6	Pins 1-7	Pins 8-14
A-C Open	0	30 V	0
A-C 20K	22-26V	0	0

To check the relay itself, carefully pull it out of the socket and with the meter on 1k ohms resistance:

CHAPTER 6: SYSTEM TROUBLESHOOTING

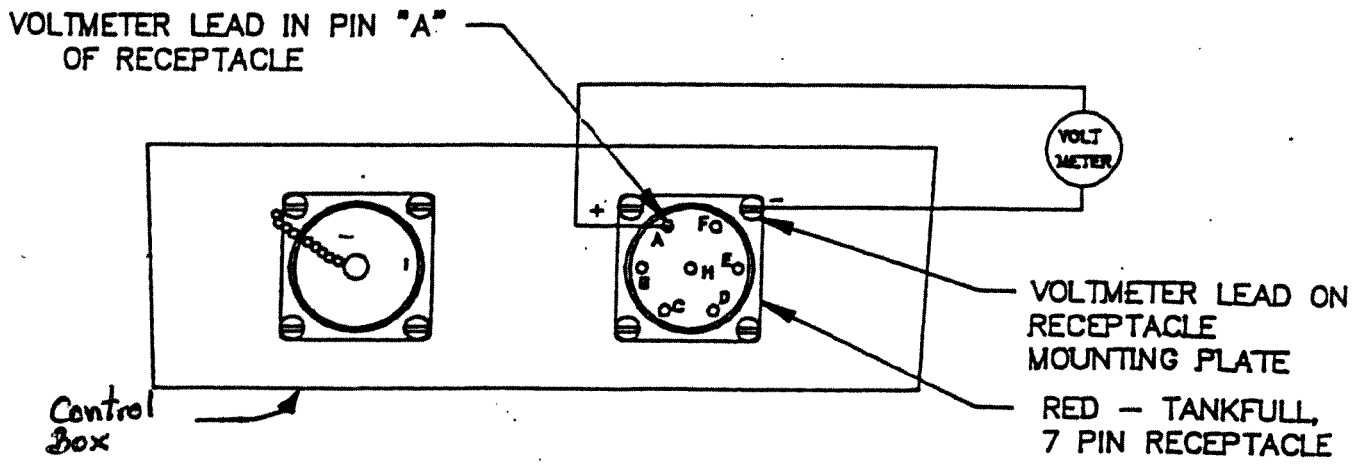
VOLTMETER LEAD IN PIN "A"
OF RECEPTACLE
VOLT METER
VOLTMETER LEAD ON
RECEPTACLE
MOUNTING PLATE
RED – TANKFULL,
7 PIN RECEPTACLE
Control Box

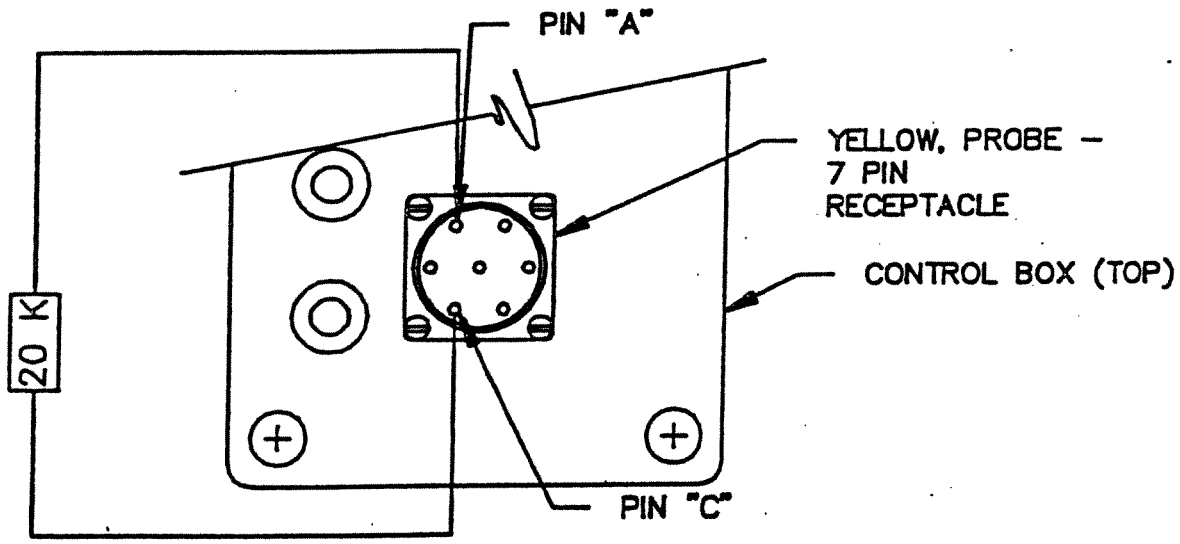
PIN "A"
YELLOW, PROBE –
7 PIN
RECEPTACLE
CONTROL BOX (TOP)
20 K
PIN "C"

Figure 6.2.

	Pins 2-6	Pins 1-7	Pins 8-14
Resistance	1600-2300 ohms	Open	Open

If the relay checks out, then there is a wiring problem and you should call Geotech.

To simulate the float rising, but the shorting pins between E and H (remove A-C resistor). This will cause the red Led to flash OFF and ON and after the time delay the green LED will come on. Red and green LED's may be interchanged to check them out. The red LEd or the green LED in the red LED socket may be checked by lifting up the tankful float and noting the continuously lit LED.

If both the A-C and (E-H) shorting wires are put in, the red LED will flash and the alarm will be on continuously. Generally the probe will malfunction before the electronics.

4. **Problems on PROB**

The PROB position makes the panel into a device to tell the depth to product and to the water table.

	Signal
Probe in Air	No signal
Probe in Product	Flashing red LED
Probe in Water	Continuous alarm & flashing red LED

The PROB selection uses the E-F (not E-H) connection on the 7-pin receptacle. Check the probe; E-F short when float just rises; E-F shorted causes flashing red LEd, but green will not go on.

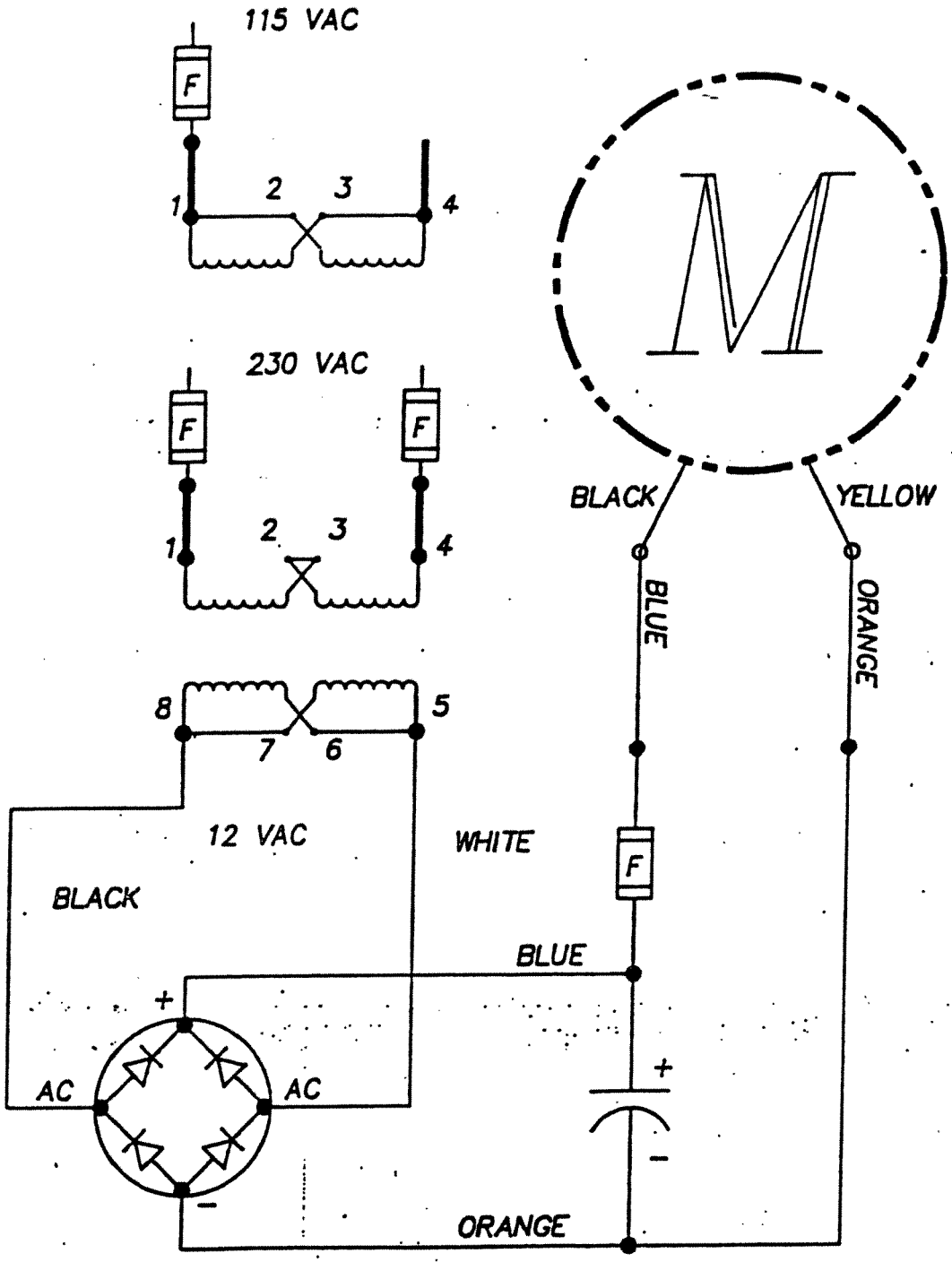

FIGURE 6.3. Wiring Schematic for Product Pump Start Box

Standard Equipment Limited Warranty

All references to the Customer herein shall mean the Customer or the Lessee as applicable.

(a) Geotech warrants that any ORS remediation equipment which it manufactures will be free from substantial defects in material and workmanship for a period of (1) year from the date such goods are delivered to a carrier by Geotech for shipment to the Customer.

(b) Geotech warrants that any Equipment which it repairs after the original warranty expires will be free from substantial defects in material and workmanship for a period of (90) days from the date such goods are delivered to a carrier by Geotech for shipment to the Customer.

(c) The Customer agrees that the liability of Geotech hereunder shall be limited to replacing, repairing or issuing credit for, at Geotech's discretion, any Equipment which is returned F.O.B. Geotech's plant within the applicable term of the warranty, provided that (I) upon examination of the Equipment Geotech determines that the alleged defect constitutes a substantial defect, and (ii) the warranty made herein is not invalid pursuant to the Section (e) hereof . The Customer agrees that such replacement, repair or credit shall be its sole and exclusive remedies hereunder. For purposes hereof, a substantial defect shall mean any defect which prevents the Equipment from operating in accordance with Geotech's published specifications. In the event that Geotech determines that Equipment which is no longer manufactured by it contains a substantial defect and the warranty covering the defective equipment is not invalid pursuant to Section (e) hereof, the Purchaser's sole and exclusive remedy hereunder shall be the repair of such Equipment or the replacement of such Equipment with new equipment at Geotech's discretion. In no case is Equipment to be returned by the Customer without first submitting a warranty claim in writing to Geotech and obtaining a return authorization number from Geotech. Equipment which is repaired or replaced pursuant to this warranty shall continue to be warranted for the unexpired portion of the warranty term applicable to the Equipment so repaired or replaced. Geotech shall make the final determination as to the existence or cause of any alleged defect.

(d) The foregoing warranty shall not be valid (I) if the alleged defect is the result of abuse, misuse, accident, alteration, neglect or unauthorized repair; (ii) if Geotech requires installation of Equipment by specifically approved Geotech employee and such installation is not effected, or the Equipment is otherwise installed improperly; or (iii) if the Equipment is resold by the Customer any repair shall be deemed unauthorized unless it is made (i) by Geotech or a duly authorized agent of Geotech or (ii) with the written consent of Geotech.

(e) The operating efficiency of treatment, abatement and recovery Equipment and systems is affected by factors extrinsic to their manufacture, including operating environment and such conditions of use as contaminant and related substance build-up, the frequency and type of operator maintenance and other external variables. For these reasons, specific levels of performance cannot be guaranteed for such Equipment and systems.

(f) THIS WARRANTY IS THE SOLE WARRANTY MADE BY GEOTECH TO THE CUSTOMER AND IS IN LIEU OF ALL OTHER WARRANTIES OR OBLIGATIONS, EXPRESS OR IMPLIED. GEOTECH EXPRESSLY DISCLAIMS ALL IMPLIED WARRANTIES OR MERCHANTABILITY OR FITNESS FOR PARTICULAR PURPOSE.

(g) THE CUSTOMER AGREES THAT IN NO EVENT SHALL GEOTECH BE LIABLE FOR SPECIAL INCIDENTAL, INDIRECT, EXEMPLARY OR CONSEQUENTIAL DAMAGES, INCLUDING BUT NOT LIMITED TO LOSS OF PROFITS OR LOSS OF USE OR ANY OTHER ECONOMIC LOSS, WHETHER BASED ON CONTRACT, TORT OR ANY OTHER LEGAL THEORY.

(h) THE REMEDIES PROVIDED HEREIN ARE CUSTOMERS SOLE AND EXCLUSIVE REMEDIES.

GEOTECH RETURN POLICY FOR ORS EQUIPMENT

Permission is required to return equipment to the Geotech Environmental Equipment Inc., facility in Denver, Colorado. A Return Authorization Number will be issued upon receipt of your request to return, which should include reasons for the return. Your return shipment to us must have this R.A. # clearly marked on the outside of package.

Proof of date of purchase is required for processing of all warranty requests.

This policy applies to both equipment sales and repair orders.

FOR A RETURN AUTHORIZATION, PLEASE CALL OUR SERVICE DEPARTMENT AT 800-833-7958 OR 303-320-4764.

Equipment Decontamination

Prior to return, all equipment must be thoroughly cleaned and decontaminated. During decontamination, personnel should wear protective clothing and observe the cautions outlined below.

Geotech reserves the right to refuse any equipment not properly decontaminated. Geotech may also choose to decontaminate equipment at a fee which will be applied to the repair invoice.

Decontamination Solutions

The determination of what decontamination solution to use should be based on the types of contaminant's present and the materials to be decontaminated. The fabrics of protective clothing are made of organic polymers which may be dissolved or destroyed by organic solvents. The metals and gaskets of tools may be damaged by overly acidic or basic compounds. Some decontamination solvents should be entirely avoided. The toxicity or physical hazards associated with using some once commonly used decontamination solutions can be as potentially dangerous as the site contaminant's.

It is important to be certain that the decon solution, the contaminant, and the material to be cleaned are all compatible with each other. If they are not, it's possible to produce toxic or flammable gases, heat, splattering, bubbling, fire or explosion. If an uncommonly used method and/or chemical solution is being considered for decontamination, it is important to consult with an experienced chemist to ensure chemical compatibility.

Some common decontamination solutions are listed below along with the contaminant's they are effective against:

Solution	Effective Against
Water	Short-chain hydrocarbons, inorganic compounds, salts, some organic acids, other polar compounds.
Dilute Acids	Basic (caustic or alkaline) compounds, amines, hydrazines.
Dilute Bases	Acidic compounds, phenols thiols, some nitro- and sulfonic compounds.
Organic solvents	Nonpolar compounds (such as some organic compounds)

The use of organic solvents is not recommended because 1) organic solvents can permeate and/or degrade the protective clothing and 2) they are generally toxic and may result in unnecessary employee exposure to hazardous chemicals.

When in doubt, use a dish washing liquid detergent. As a decontamination solution, it is readily available, is the safest of all the above, and is usually strong enough if used generously.

The use of steam can also be effective for decontamination. A water-lazer (pressurized water) is exceptionally valuable.

The following substances are noted for their particular efficiency in removing certain contaminant's or for decontaminating certain types of equipment.

Solution	Effective Against
Penetone	PCB Contamination (since penetone may also remove paint, it is a good idea to spot-test before use)
Liquinox	Contaminated pumps
Ivory liquid	Oils
Diluted HTH	Cyanides
Radiac	Low level radioactivity
Isopropanol	Biological agents (should not be used on rubber products since it will break down rubber)
Hexane	Certain types of lab or sampling equipment (use of hexane is discouraged due to its flammability and toxicity)
Zep	General purpose cleaning
Alconox	General purpose cleaning

Decontamination Solutions to Avoid

Some decontamination solutions should be avoided because of their toxicity, flammability, or harmful effects to the environment.

Organic decontamination solutions should not be used on personal protective equipment (PPE) because they may degrade the rubber or other materials comprising the PPE.

Mercurials are sometimes used for sterilization. They should be avoided because of their toxicity.

Chemical leaching, polymerization, and halogen stripping should all be avoided because of possible complications during decontamination.

Sand-blasting, a method of physical removal, should be avoided because the sand used on the contaminated object usually needs to be disposed of as hazardous waste, a very costly proposition. Also, sand-blasting exposes personnel to silica, a carcinogen.

Freon is known to be particularly effective for the cleansing of PCB's but its effect on the ozone layer is extremely harmful. Its use is discouraged.

Strong acids or bases should not be used when cleaning metals and gaskets or tools or other equipment because of the possibility of corrosion.

Disposal of Decontamination Solutions and Waste Water

All solutions and water used for decontamination must be collected. If lab analysis indicate that the water and/or solutions exceed allowable contamination levels, they must be treated as hazardous waste. Alternatively, the solutions and water may be treated on-site to lower the contamination levels and render them nonhazardous.

Containers such as 55-gallon drums should be available for storage of wastes.

Ent decontamination solutions can be collected by using heavy-duty plastic sheets, visqueen sheets, kiddie pools, or if needed, a larger ontainment basin. The decontamination of equipment must be performed on the sheets or in the basins. They could

be placed on a slight angle so that the spent decontamination solutions drain into a collection basin or drum

Recommended Supplies for Decontamination of Personnel, Clothing and Equipment

The list below contains recommendations for supplies which would be on hand for the decontamination of personnel, clothing and equipment. Depending on the site activities, not all of these items may be needed. Alternatively, some additional items not listed here may be required.

- Drop cloths of plastic or other suitable material, such as visqueen, for heavily contaminated equipment.
- Disposal collection containers, such as drums or suitably lined trash cans for disposable clothing and heavily contaminated personal protective clothing or equipment to be discarded.
- Lined box with adsorbents for wiping or rinsing off gross contaminant's and liquid contaminant's.
- Wash tubs of sufficient size to enable workers to place booted foot in and wash off contaminant's (without a drain or with a drain connected to a collection tank or appropriate treatment system).
- Wash solutions selected to wash off and reduce the hazards associated with the contaminated wash and rinse solutions.
- Rinse solution (usually water) to remove contaminant's and contaminated wash solutions
- Long-handled, soft-bristled brushes to help wash and rinse off contaminant's.
- Lockers and cabinets for storage of decontaminated clothing and equipment.
- Storage containers for contaminated wash and rinse solutions.
- Plastic sheeting, sealed pads with drains, or other appropriate method for containing and collecting contaminated wash and rinse water spilled during decontamination.
- Shower facilities for full body wash or at a minimum, personal wash sinks (with drains connected to collection tank or appropriate treatment system).
- Soap or wash solution, wash cloths and towels.
- Clean clothing and personal item storage lockers and/or closets.

APPENDIX D
SITEPRO 2000
Control Panel

geotech

SITEPRO™ 2000

Probe Scavenger™/Water Pump Control Panel

Installation & Operation Manual

8/10/99
Rev 6
Man10383.qxd

Geotech Environmental Equipment, Inc.
8035 East 40th Avenue
Denver, Colorado 80207
(303) 320-4764 · (800) 833-7958 · FAX (303) 322-7242
email: geotech@ix.netcom.com
website: www.geotechenv.com

ORS SITEPRO™ 2000 SYSTEM SPECIFICATION SHEET

MODEL: ORS Probe Scavenger™/Water pump Controller

MODEL NUMBER: _____

SERIAL NUMBER: _____

DATE OF MFG.: _____

PANEL VOLTAGE: 115_____ 230_____

PRODUCT PUMP OUTPUT:

HP_____ Phase_____ Voltage _____

WATER PUMP OUTPUT

HP_____ Phase_____ Voltage_____

OPTIONS:

- Telemonitoring (Includes Modem) YES____ NO____
- Purged Panel YES____ NO____

QUICK START INSTRUCTIONS

Read This Section Even If You Don't Read Anything Else.

The large envelope shipped with your ORS SITEPRO™2000 control panel contains Quick Start Installation and Configuration Instructions. Familiarity with the information in this envelope is absolutely essential for safe and trouble free operation of the ORS SITEPRO™ 2000 control panel.

The ORS SITEPRO™ Quick Start envelop contains the following instruction sheets:

- A Field Wiring Diagram that shows basic wiring of motors and probes.
- An Optional Feature Wiring Diagram that shows how to wire network connections, interlocks, analog sensors and other specialized devices.
- A Site Configuration Guide that explains how to lay out your site and define network interlocks.
- A Panel Configuration Guide that explains how to configure individual panels after the ORS SITEPRO™ network has been laid out.

The information in this supplement is provided to complement the ORS SITEPRO™ Installation & Operation Manual. Although we highly recommend that all users read the entire Installation & Operation manual, we also recognize that some

experienced technicians may desire a quick start summary of essential information.

Please proceed as follows:

1. Refer to the Site Configuration Guide to determine the basic layout of your site.

2. Mount the ORS SITEPRO™ panel(s) and carry out basic wiring according to the generic Field Wiring Diagram.

3. Carry out additional site-specific wiring according to the recommendations and examples provided in the Optional Features Wiring Diagram.

4. Configure each panel according to the Panel Configuration Guide.

5. Document the configuration of each panel by filing out the Panel Configuration Sheet included in Appendix A of the ORS SITEPRO™ manual. Be certain that these sheets are available for reference before calling Geotech for assistance.

Observe all Warning and Cautions included in the ORS SITEPRO™ manual.

TABLE OF CONTENTS

PREFACE . . . . . p.i
ABOUT THIS MANUAL . . . . . p.i
ADDITIONAL INFORMATION REQUIRED . . . . . p.i
WHO SHOULD READ THIS MANUAL . . . . . p.ii
WHAT THIS MANUAL COVERS . . . . . p.ii
WHAT YOU SHOULD KNOW BEFORE STARTING . . . p.iv
DOCUMENTATION CONVENTIONS . . . . . p.iv
FOR MORE INFORMATION . . . . . p.v
CHAPTER 1: SYSTEM DESCRIPTION p.1-1
OVERVIEW p.1-2
SPECIFICATIONS p.1-3
USER INTERFACE p.1-7
HOW ORS SITEPRO™ WORKS p.1-10
CHAPTER 2: SYSTEM INSTALLATION p.2-1
INSPECTION P.2-1
PANEL INSTALLATION p.2-2
Mount Panel p.2-2
WIRING p.2-2
Install Chassis Ground. p.2-2
Install Intrinsically Safe Ground p.2-4
Wire Incoming Power p.2-4
Wire Product Pump p.2-5
Wire Water Pump p.2-5
Wire Downwell Probe p.2-5
Wire Tankfull Probe p.2-6
Wire Interlocks p.2-7
Wire Network Connections p.2-9
Wire Dry Contact Outputs p.2-10
Wire Analog inputs p.2-11
Wire Totalizer p.2-11
Connect Modem p.2-12

CHAPTER 3: SYSTEM CONFIGURATION p.3-1
INTRODUCTION p.3-1
Network Configuration Sheet p.3-1
Panel Configuration Sheet. p.3-2
CONFIGURATION SWITCHES p.3-2
PANEL CONFIGURATION PROCEDURES p.3-5
Single Panel Applications p.3-7
Basic Pump Control p.3-7
Configuring for Interlocks p.3-7
Network Applications p.3-11
Network Configuration Example p.3-17
DOCUMENT YOUR CONFIGURATION p.3-20
CHAPTER 4: SYSTEM OPERATION p.4-1
PANEL CONTROLS & INDICATORS p.4-1
GENERAL PANEL FUNCTIONS p.4-3
CONTROL POWER Switch p.4-3
SYSTEM TEST Button p.4-3
SYSTEM STATUS Indicators p.4-4
REMOTE STATUS Indicators p.4-6
PUMP CONTROL FUNCTIONS p.4-6
PUMP POWER Switches p.4-6
PUMP CONTROL Switches p.4-7
PUMP CONTROL Indicators p.4-7
PUMP STATUS Indicators p.4-8
SYSTEM PRECHECK PROCEDURES p.4-10
Check Wiring p.4-10
Run Self-Test p.4-11
Check Pumps p.4-11
Check Downwell Probe p.4-11
SINGLE PANEL STARTUP p.4-12
NETWORK STARTUP p.4-14
ROUTINE OPERATION p.4-14

Water Override p.4-14
Tankfull Alarm p.4-14
TRACING & CLEARING ALARMS p.4-15
Single Panel Applications p.4-15
Network Applications p.4-15
CHAPTER 5: SYSTEM MAINTENANCE p.5-1
Vacuum Enclosure p.5-1
Clean Window p.5-1
Chance Desiccant p.5-1
Clean Probe p.5-2
CHAPTER 6: PROBLEM SOLVING p.6-1
GETTING HELP p.6-1
SERVICE LOCATIONS p.6-2
BASIC TROUBLESHOOTING p.6-2
Diagnostic Messages p.6-3
ADDITIONAL TROUBLESHOOTING p.6-7
APPENDIX A: PANEL CONFIGURATION SHEET p.A-1
APPENDIX B: GLOSSARY p.B-1
APPENDIX C: INDEX p.C-1

PREFACE

ABOUT THIS MANUAL

The ORS SITEPRO™ 2000 Probe Scavenger™/Water Pump Controller is available in two configurations; the standard pump control model, and an enhanced model that includes telemonitoring and data logging features. This manual contains all the information required to install and operate the standard ORS SITEPRO™ system. Instructions for configuring and operating the enhanced model are provided in the separate ORS SITEPRO™ Manager software manual. Refer to the System Checklist at the front of this manual to determine whether or not your system includes the telemonitoring option.

ADDITIONAL DOCUMENTATION REQUIRED

ORS Probe Scavenger™ manual

In addition to this ORS SITEPRO™ 2000 manual, you will need your manual provided with your ORS Probe Scavenger™ pumping system. Each ORS pumping system is accompanied by a documentation package that contains all the information required for installation and operation with an ORS SITEPRO™ 2000 Control Panel. If you plan to use another ORS SITEPRO™ 2000 Control panel with another manufacturer's pump, be sure to confirm that the unit's electrical requirement match those of the panel. Refer to Chapter 1 of this manual for a list of ORS SITEPRO™ 2000 specifications.

ORS SITEPRO™ Manager Software manual

If your ORS SITEPRO™ is equipped with the optional telemonitoring features, you will also need the manual that accompanies the ORS SITEPRO™ Manager remote monitoring software package.

WHO SHOULD READ THIS MANUAL

This manual is intended for field technicians, project engineers or anyone responsible for installing, operating or maintaining site remediation equipment.

WHAT THIS MANUAL COVERS

Here is what you will find in this manual

Chapter 1: System Description includes;

- Features and Specifications
- Introduction to User Interface
- Sample Applications

Chapter 2: System Installation includes;

- Panel mounting instructions
- Wiring instructions
- Wiring diagrams

Chapter 3: System Configuration includes;

- Instructions for configuring the panel to handle input from external shutoff devices
- Instructions for configuring the panel for ***network*** use

Chapter 4: System Operation includes;

- Descriptions of all ORS SITEPRO controls and indicators
- Startup and operating procedures for single panels
- Startup and operating procedures for multi-panel networked systems
- Tracing and clearing interlock alarms.

Chapter 5: System Maintenance includes;

- Maintenance procedures for the panel and probe

Chapter 6: Problem Solving includes;

- Procedures designed to help you determine if your ORS SITEPRO™ is working properly
- What to do if a problem is detected

Appendix A: Panel Configuration sheet includes;

- A blank Panel configuration Sheet for documenting the final panel configuration

Appendix B: Glossary includes;

- Definitions of technical terms used in the manual

Appendix C: Index includes;

- Index of key words used in the manual.

WHAT YOU SHOULD KNOW BEFORE STARTING

Although the ***microprocessor*** technology used by the ORS SITEPRO™ 2000 is highly sophisticated and powerful, the panel itself is easy to install, configure and operate. No special training or skills are required to gain the benefits of this product.

An important feature of the ORS SITEPRO™ 2000 is that it is extremely flexible and has a range of capabilities that extend from basic pump control to the coordination and management of complex multi-component remediation systems. The user will find that although basic operation of the ORS SITEPRO™ 2000 is intuitively simple, experience with the panel's more advanced features will enhance his or her site engineering and system management skills.

Although Geotech strongly recommends that you read all parts of this manual before installing or operating the ORS SITEPRO™ 2000, experienced users may wish to skip directly to the installation and configuration sections in Chapters 2 and 3.

DOCUMENTATION CONVENTIONS

This manual uses the following conventions to present information:

An exclamation point icon indicates a WARNING of a situation or condition that could lead to personal injury or death. You should not proceed until you read and thoroughly understand the WARNING message.

A raised hand icon indicates CAUTION information that relates to a situation or condition that could lead to equipment malfunction or damage. You should not proceed until you read and thoroughly understand the CAUTION message.

A note icon indicates NOTE information. Notes provide additional or supplementary information about an activity or concept.

Words or phrases printed in ***bold italics*** are defined in the glossary at the back of the manual.

WARRANTY

ORS SITEPRO™ 2000 Control Panels are warranteed only when they are connected to ORS equipment components or to components recommended by Geotech. Refer to the back of this manual for the Geotech Standard Equipment Limited Warranty.

FOR MORE INFORMATION:

If you need additional information on this or any other Geotech product, you can contact our Sales or Technical Support staff at:

Geotech Environmental Equipment
8035 East 40th Avenue
Denver, CO 80207

Phone: (toll free in the U.S.) 800-833-7958
or call 303-320-4764.

Chapter 1: SYSTEM DESCRIPTION

Chapter Summary

This chapter contains the following introductory information:

- ***Overview*** *- A general description of ORS SITEPRO™ 2000 features & options.*
- ***Specifications*** *- Panel dimensions, site requirements, sensor input.*
- ***User Interface*** *- Manual operation, on site computer interface, remote modem communications.*
- ***How ORS SITEPRO™ Works*** *- An introduction to basic single panel and panel network function.*

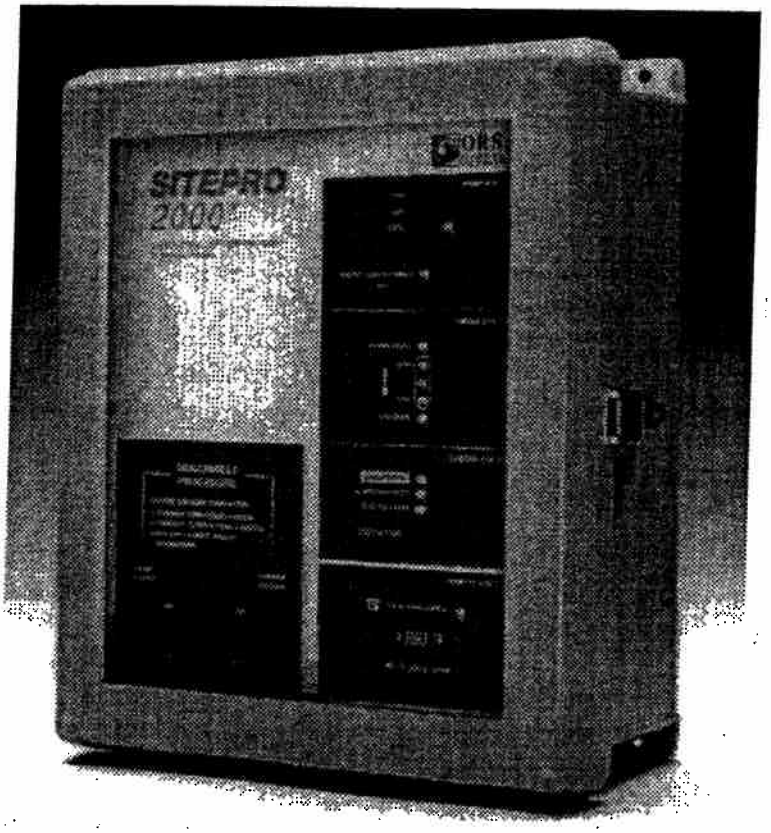

FIGURE 1-1. The ORS SITEPRO™ 2000 Control Panel

OVERVIEW

The ORS SITEPRO™ 2000 Probe Scavenger™ /Water Pump Control Panel (Figure 1-1 p. 1-1) is designed for simultaneous control of one ORS Probe Scavenger™ (SDFS) product pump and one water table depression pump (WTDP). The controller is housed within a weather-proof ***NEMA 4 (IP66)*** enclosure and incorporates circuitry to receive ***intrinsically safe*** input from sensors deployed in hazardous locations.

Each ORS Control Panel™ can be operated by itself or can be linked to as many as 15 other similar panels in a user configurable alarm communication ***network***. Because each panel in the network has access to alarm inputs from all the other panels, entire sites can be tied together and configured to respond appropriately to input received by any panel in the network.

The ORS SITEPRO™ 2000 is fully instrumented and includes status displays that provide a visual representation of the pumps operating conditions. The panel also incorporates a self-test feature that continuously monitors line voltage, condition of the pump control switches, panel temperature, and probe integrity whenever the ORS SITEPRO™ 2000 is in operation. An additional self-test routine that runs at panel startup (or whenever SYSTEM TEST button is pressed), checks internal program and data memory, ***RS-232*** serial communications, the ***analog*** to digital (a/D) converter, and the integrity of all panel indicators.

The standard ORS SITEPRO™ 2000 Probe Scavenger™/Water Pump Controller is equipped with terminals that allow the panel to interface with a SDFS downwell probe, a standard ORS density actuated WTDP probe, a tankfull probe as well as external ***interlock*** devices. Additional inputs (including those for ***analog*** devices, and a ***totalizer***), become available when the telemonitoring option is installed or when the standard panel is networked to an enhanced model.

model. ***Form C dry contact*** outputs are also available for interfacing with additional external equipment components, buzzers, indicators, and security alarm systems with the enhanced model.

Each standard ORS SITEPRO™ 2000 Probe Scavenger™/Water Pump Control Panel is designed to run one 12 volt product pump (with separate power supply) and one water pump up to 2-1/2 HP in size.

Optional features include a telemonitoring package that incorporates remote monitoring and data logging as well as auto dial-out on alarm to either PC or Fax machine. Water pumps larger than 2-1/2 HP can be controlled with the addition of an external motor contactor.

To complement the optional remote monitoring and data logging features, Geotech offers a comprehensive software package (ORS SITEPRO™ Manager) to provide graphical representations of the ORS SITEPRO™ 2000 panel as it operates on site. Optional features of this software package allow the user to generate reports, graphs and active P&IDs of remediation functions. ORS SITEPRO™ Manager is available at no extra cost when the telemonitoring package is purchased.

SPECIFICATIONS

Refer to Figure 1-2 (p.1-4) for a panel layout diagram showing dimensions and wiring access points.

Enclosure

Height: 14" (35.5 cm)

Width: 12" (30.5 cm)

Depth: 6" (15.2 cm)

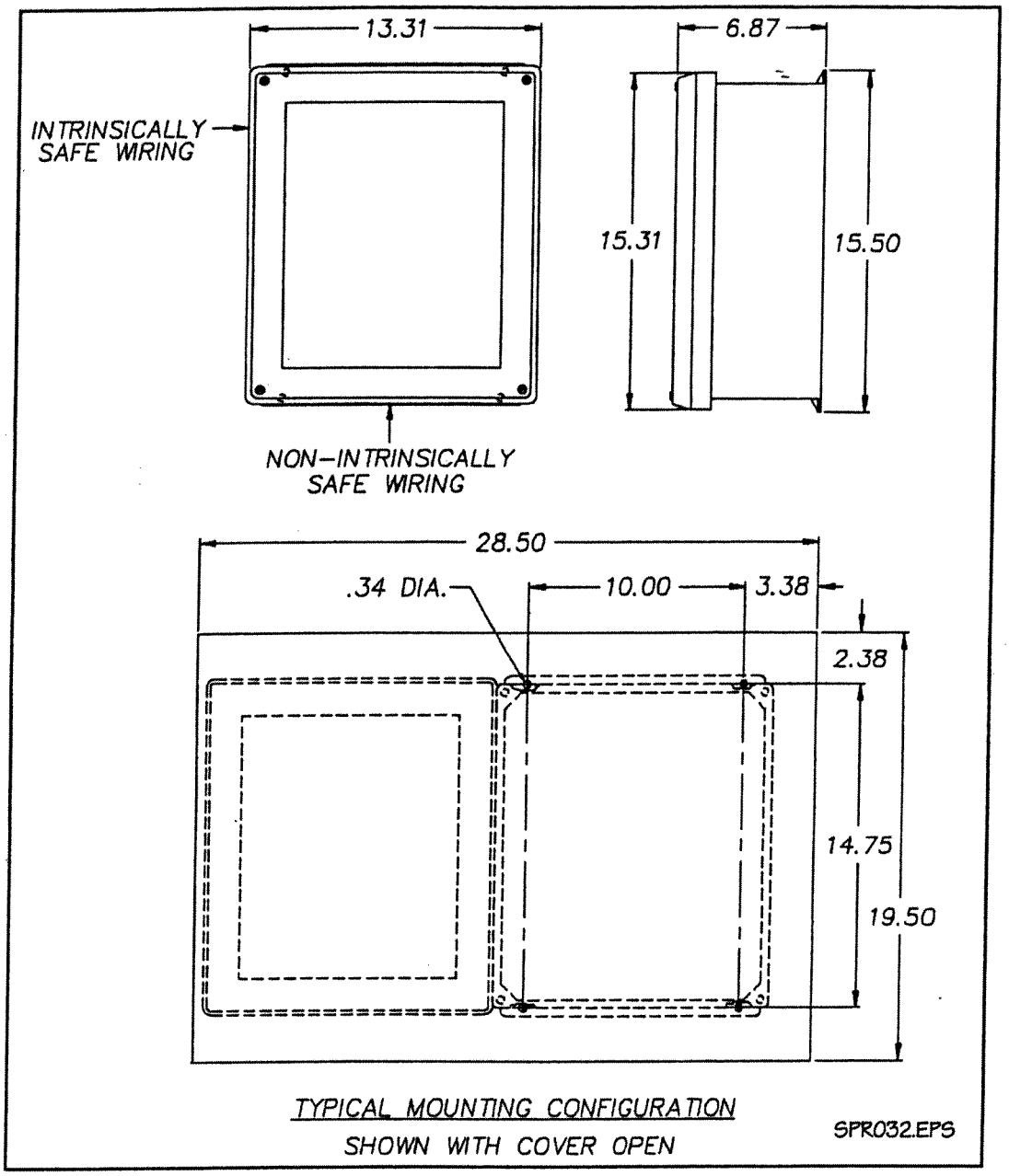

FIGURE 1-2. The ORS SITEPRO™ 2000 enclosure showing dimensions; mounting footprint, wiring access and clearance required for door opening.

Rating: NEMA 4,IP 66

Materials: Fiberglass reinforced plastic w/Lexan window.

Power wiring access: Bottom of enclosure.

Intrinsically Safe wiring access: Left side of enclosure.

Non-intrinsically safe wiring access: Bottom of enclosure.

Modem wiring access: Bottom of enclosure.

Site Requirements

Door clearance for full 180° door opening:
20" (50.8cm) wide x 17" (43.2cm) high to left of enclosure.

Enclosure footprint for wall mounting:
12-1/4" (31.1cm) wide x 15-1/2" (39.4cm) high.

Line Voltage: 115VAC (+/- 20%), 50/60 Hz, 1-phase
230VAC (+/- 20%), 50/60 Hz, 1-phase

Power Consumption: 10 Watts, not including motor power.

Modem: Standard dial-pulse or touch-tone (Optional).

Operating Environment

Operating temperature: -40° F (-40° C) to 130° F (54° C)

Humidity: 8% to 85%, non condensing.

Inputs (Available on all panels)

(5) ***Intrinsically safe*** inputs for probes.

(4) ***Intrinsically safe*** interlock inputs.

(4) ***Non-intrinsically safe*** interlock inputs.

(1) ***Non-intrinsically safe*** Water Alarm input.

Additional Inputs (Available with telemonitoring)*

(3) Non-intrinsically safe 4-10 mA ***analog*** inputs with 8 bit measurement resolution.

(2) Motor current sensors for monitoring.

(1) Voltage sensor for monitoring.

(1) Temperature sensor for monitoring.

(1) ***Totalizer*** input for water flow measurement; input range 1-120 pulses/gallon w/20 gpm maximum. Totalizer must supply a 5-24VDC pulse to the panel.

(1) Optical coupled Peripheral Equipment Interface inputs.

Outputs

(2) ***Form C dry contact*** outputs capable of handling 100 mA, non-inductive.

(2) Optically coupled Peripheral Equipment Interface outputs.

(2) Optional SSR outputs to drive small AC powered devices.

(1) Pump Motor Output for 2-1/2 HP, 230VAC, 1-phase, 50/60 Hz or 1 HP, 115VAC, 1-phase, 50/60Hz .

(1) Pump Motor Output for 3/4HP, 230VAC, 1-phase 50/60 Hz or 1/3 HP, 115VAC, 1-phase, 50/60 Hz.

Interlock Communication Bus

Type: ***RS-485***

Capacity: Supports up to 16 ORS SITEPRO™ panels over maximum distance of 3000' (1000m) using standard 24 AWG, 2-conductor twisted shielded pair wire (Belden #9841).

Communications: Standard 9-pin ***RS-232*** serial port 300-2400 ***baud*** for data logging (use of special ORS Cable Assembly PBN2390078 is required for local access).*

Certification/Approvals (Pending)

Factory Mutual entity approval on ***intrinsically safe*** inputs.

* Hardware for enhanced features built into every panel. Features become operational when panel is equipped with tele-monitoring or is networked to a telemonitor equipped ORS SITEPRO™ panel.

USER INTERFACE

The ORS SITEPRO™ 2000 can be operated in any of the three modes shown in figure 1-3 (p.1-8) and described briefly on the following pages.

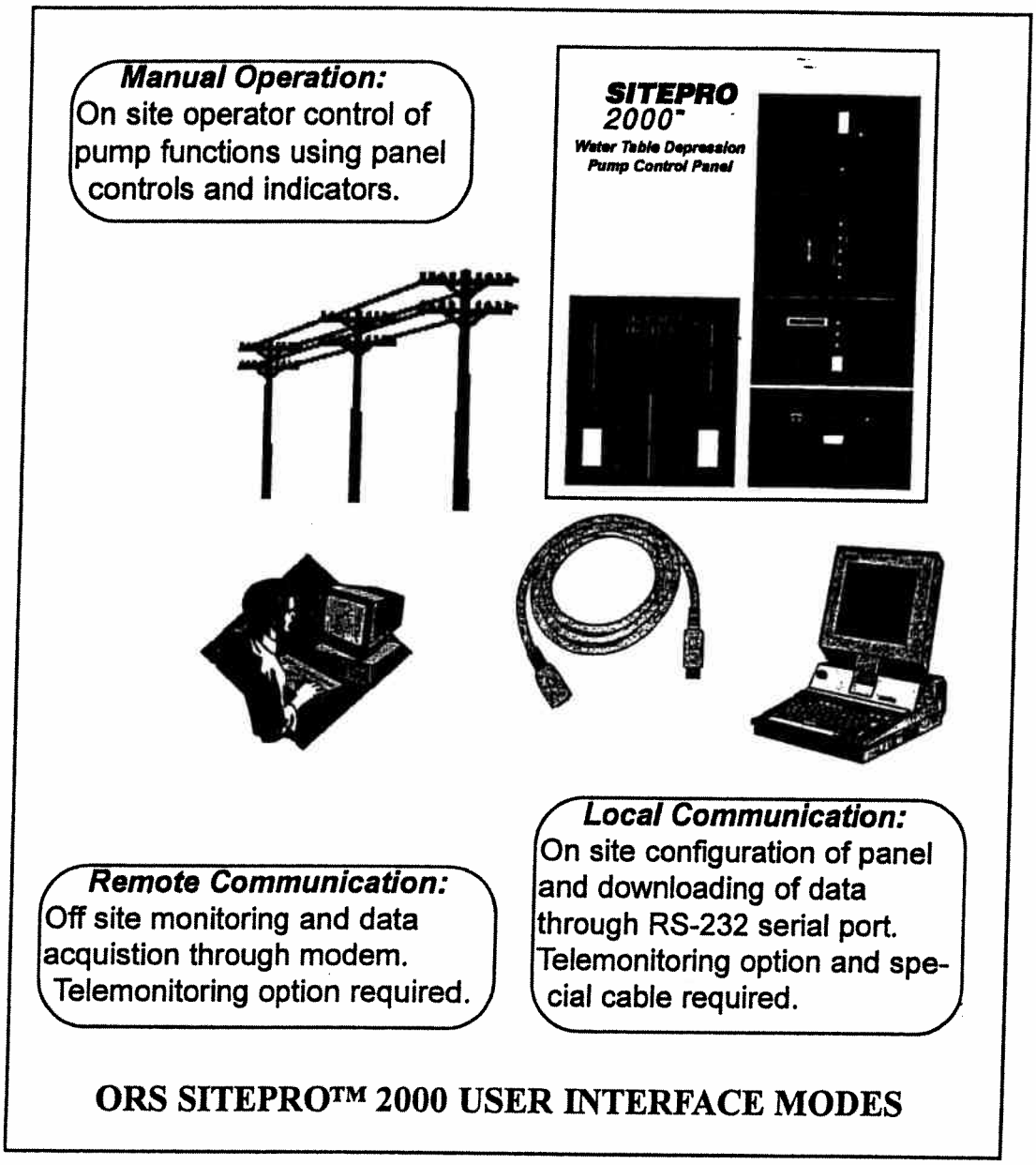

Figure 1-3. Three ways of using the ORS SITEPRO™ 2000

Manual Operation Mode

The panel is equipped with controls and indicators that permit manual operation of the pumps. Control include water and product pump POWER switches that cut off all power to the motors, 3-position CONTROL switches that determine whether the motors run continuously or cycle on and off in response to sensor input, and a CONTROL POWER switch to cut off power to the control circuitry. A SYSTEM TEST button activates the panel's self-test feature. Refer to Chapter 4 for details of panel operation.

In ORS SITEPRO™ 2000 systems without the telemonitoring option, manual operation is the only way the user can interface with the system.

Local Communication Mode

When the ORS SITEPRO™ 2000 is equipped with the telemonitoring option, the user can use a computer to communicate with the panel either remotely over a telephone line (Remote Communication Mode) or locally via a special cable to the RS-232 serial port (Local Communication Mode).

Two basic types of operations are possible using the Local Communication Mode:

1. Set up and configure the data logging and remote monitoring features.

2. Download data from the data logger.

Procedures for using the Local Communication Mode are detailed in the manual that accompanies ORS SITEPRO™ Manager software package.

Remote Communication Mode

The modem and associated hardware/software included with the telemonitoring option allows the user to communicate with the ORS SITEPRO™ 2000 panel from a off-site computer.

Four basic types of operation are possible using the Remote Communication Mode:

1. Set up and configure the data logging and remote monitoring features.

2. Download data from the data logger.

3. Access real time graphs of site conditions.

4. Auto dial-out on alarm.

The Remote Communication Mode can also be used to dial-out to a fax machine.

Procedures for using the Remote Communication Mode are detailed in the manual that accompanies the ORS SITEPRO™ 2000 Manager software package.

HOW ORS SITEPRO™ 2000 WORKS

The ORS SITEPRO™ 2000 uses highly flexible microprocessor based electronics to provide a wide spectrum of capabilities that provide a range from basic motor control to complex and sophisticated multipanel networking. This built-in versatility allows the ORS SITEPRO™ 2000 to be configured on site to match the unique requirements of any remediation application.

Basic Motor Control

Figure 1-4 (p.1-11) shows a simple site remediation system in which an ORS SITEPRO™ 2000 panel controls water and product pumps deployed together in a recovery well. During normal operation, the water pump maintains a cone of depression in the water table while the ORS Probe Scavenger™ recovers product that is drawn into the well by the action of the water pump.

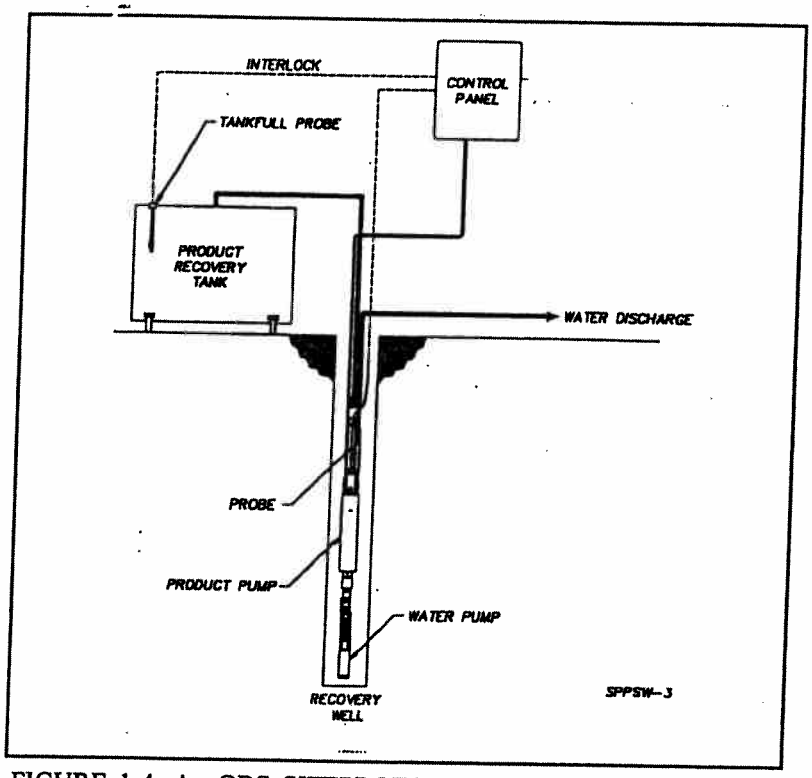

FIGURE 1-4. An ORS SITEPRO™ 2000 Probe Scavenger™/Water Pump Control Panel with product and water pumps.

Product recovered by the ORS Probe Scavenger™ is pumped into a product recovery tank where its level is monitored by a tankful probe. If the tank becomes full, a warning indicator on the panel is illuminated and the ORS Probe Scavenger™, but not the water pump, is shut-off.

Pump Control With Interlocks

In most applications, your ORS SITEPRO™ 2000 will be integrated into a remediation system that includes additional equipment components. These components (oil/water separators, carbon tanks etc.) often must be interlocked to the control panel to optimize system performance and to prevent permit excursions in the event of a components failure.

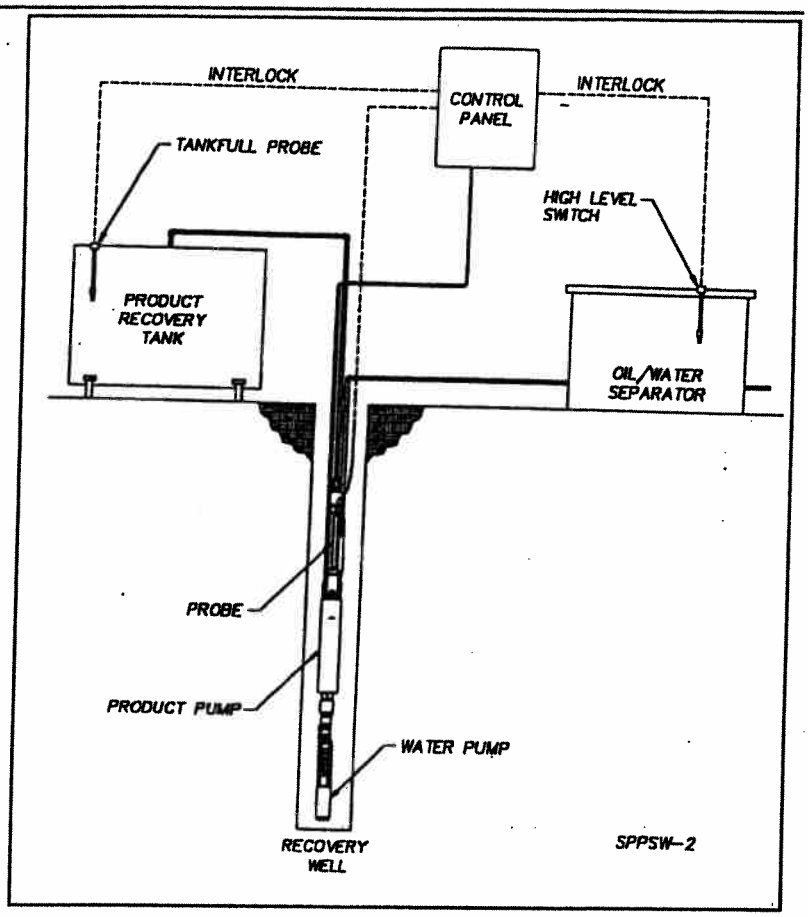

FIGURE 1-5. An ORS SITEPRO™ panel with a tankfull probe and one additional ***interlock*** device (high level switch) attached.

Figure 1-5 (above) shows another simple remediation system in which contaminated water recovered by the water pump passes through an oil/water separator equipped with a high level switch. This switch is wired to the control panel and will shut off the pumps if the oil/water separator becomes full. Use of such external ***interlock*** devices (high level shutoff switches, pressure switches, etc.) is facilitated by a system of internal circuits built into every ORS SITEPRO™ 2000 panel. These circuits provide four separate ***alarm channels*** for attachment of ***interlock*** devices.

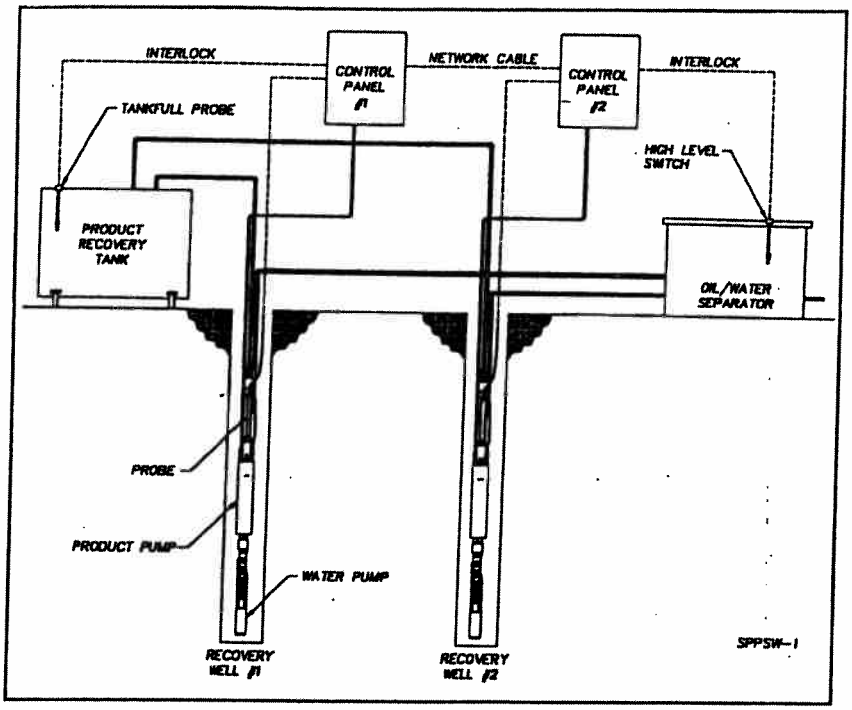

FIGURE 1-6. A two ORS panel SITEPRO™ ***network.***

In standard ORS SITEPRO™ Probe Scavenger/Water Pump panels, ***alarm channel*** 1 is dedicated for use with the tankful probe. A jumper wire connecting terminal 1 on TB1 to terminal 8 on TB2 permits a tankfull alarm to shut off the product pump only while lighting the TANK FULL indicator. The water pump will continue to run. If the jumper wire is removed, any sensor wired to ***alarm channel*** 1 will behave like any other interlock device. If the tankfull probe is used without the jumper, a tankfull signal will shut off both pumps and will not light the tankfull indicator.

Multi-Panel Networks

When the two or more ORS SITEPRO™ 2000 panels are linked together in a ***network*** as shown in figure 1-6 (above), the individual panel ***microprosessors*** are able to communicate and share information through a system of circuits called the ***Interlock Communication.***

Bus, or ICB. Each panel in a network can be configured to send and/or receive alarm signals on any or all of the four ***alarm channels***. In this way alarms received locally by one panel can be broadcast on the ICB and use to shut off other panels in the ***network.***

In Figure 1-6 (p. 1-13), two ORS Probe Scavenger/Water Pump ™ Control Panels are connected by a network cable. The tankfull probe is attached to Panel #1 while an oil/water separator high level switch is attached to panel #2. The ***network*** connection allows both panels to receive input from either the tankful probe or the high level switch.

Network Management

Whenever a multi-panel ORS SITEPRO™ 2000 ***network*** is configured, one of the panels in the ***network*** must be designated to carry out special ***Interlock Communication Bus*** management functions. This panel, called the Master, controls the flow of information on the bus, assesses the ***interlock*** status of the other panels, called Slaves, and communicates with the host computer if the telecommunication option is installed. See Figure 1-7 (p.1-15) for a diagrammatic representation of the relationship between Master and Slave panels.

If the telecommunication option is installed in one of the panels in a ***network***, that panel must be configured as the Master. However, if no remote monitoring is required, any panel in the ***network*** can be the Master. Panels are designated Masters or Slaves by setting dip switches inside each panel.

During network operation, the Master continuously polls the Slaves in a set sequence determined by the ***network addresses*** the user chooses for the panels. When a Slave is polled, it is temporarily given control of the ***Interlock Communication Bus***. The Slave then broadcasts any current ***interlock*** alarms that are on ***alarm channels*** configured to send.

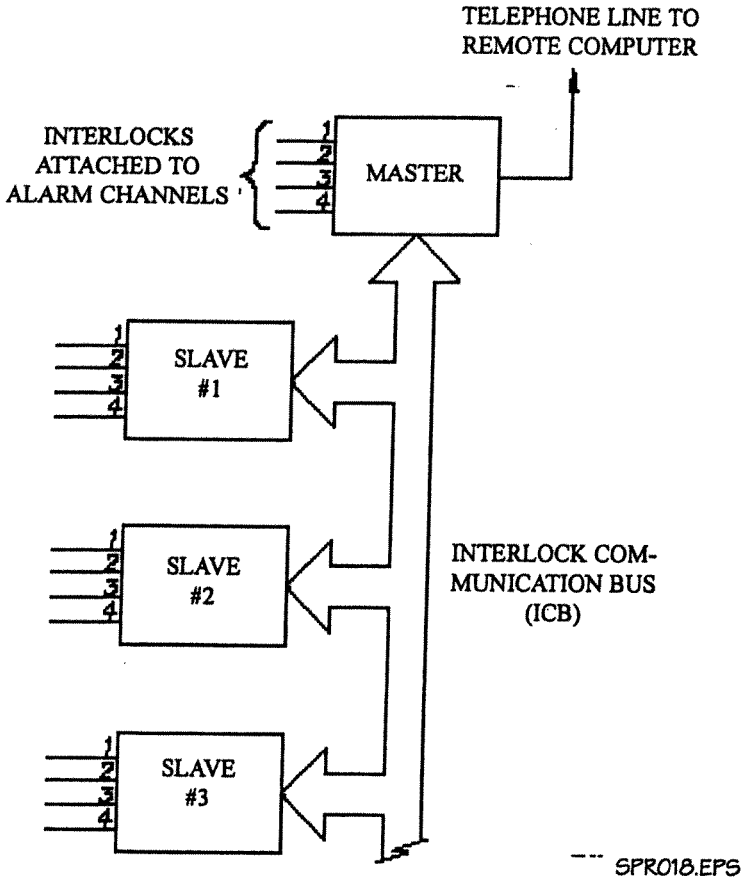

FIGURE 1-7. Diagrammatic representation of the ***Interlock Communication*** bus.

Network (Slaves and Master) will then respond to the alarms and shut down if they are configured to receive on these same alarm channels

Step by step procedures for configuring your ORS SITEPRO™ 2000 Control Panel are provided in chapter 3 of this manual

Chapter 2: SYSTEM INSTALLATION

Chapter Summary

This chapter contains the following ORS SITEPRO™ 2000 installation instructions:

- ***Warnings & Cautions*** *- How to avoid damage to yourself or the panel*
- ***Inspection*** *- How to determine if you received what you ordered.*
- ***Mounting the Panel*** *- Procedures for mounting the control panel*
- ***Wiring*** *- Procedures for wiring into and out of the panel.*

The ORS SITEPRO™ 2000 Probe Scavenger™ / Water Pump Control Panel must be deployed in a non-hazardous location and all conduit runs from the well head to the panel must conform to Article 501-5 of the National Electrical Code (NEC) 1993.

Before deploying the ORS SITEPRO™ 2000 refer to the System Checklist at the front of the manual and answer the following questions.

1. Is the electrical service at the site properly sized for this panel and does it conform to *NEC* and local codes?

2. Are the electrical characteristics of your pumps compatible with those of the panel?

INSPECTION

Inspect all equipment upon arrival. Check the contents of the packing crate against the System Specification sheet at the front of this manual. If any items are missing or damaged, make note of this on the shipping papers and immediately notify Geotech Environmental Equipment, Inc. at 800-833-7958 OR (303) 320-4764.

PANEL INSTALLATION

Mount Panel

1. Remove the panel from its packing crate and hold it against the intended mounting surface.

2. Refer to Figure 1-2 (p.1-4) and position the panel so that the access door will open at least 12-12" without obstruction.

3. If the mounting surface is wood, use wood screws to attach the panel mounting feet to the wall. If the surface is metal, use the panel as a template and mark the locations of the mounting holes. Then drill and tap the holes and use self tapping screws to mount the panel.

Do not use nails to attach the panel, as a misdirected hammer blow could damage the enclosure.

WIRING

All wiring must be carried out by a qualified electrician and be in accordance with state and local codes. Proper grounding of the panel is necessary to maintain the ***intrinsically safe rating*** of the ORS SITEPRO ™ 2000. See the following sections for panel grounding procedures.

Install Chassis Ground

Before beginning panel hookup procedures, run a wire from the panel chassis ground lug to a good earth ground such as the circuit breaker panel enclosure. The ground log is located on the chassis behind the panel faceplate (See the ORS SITEPRO ™ 2000 wiring diagram figure 2-1, p.2-3)

Before installing wires, setting configuration dip switches or touching exposed portions of the panel circuit board, safely discharge any static electricity from your body by touching or otherwise grounding yourself to the panel chassis.

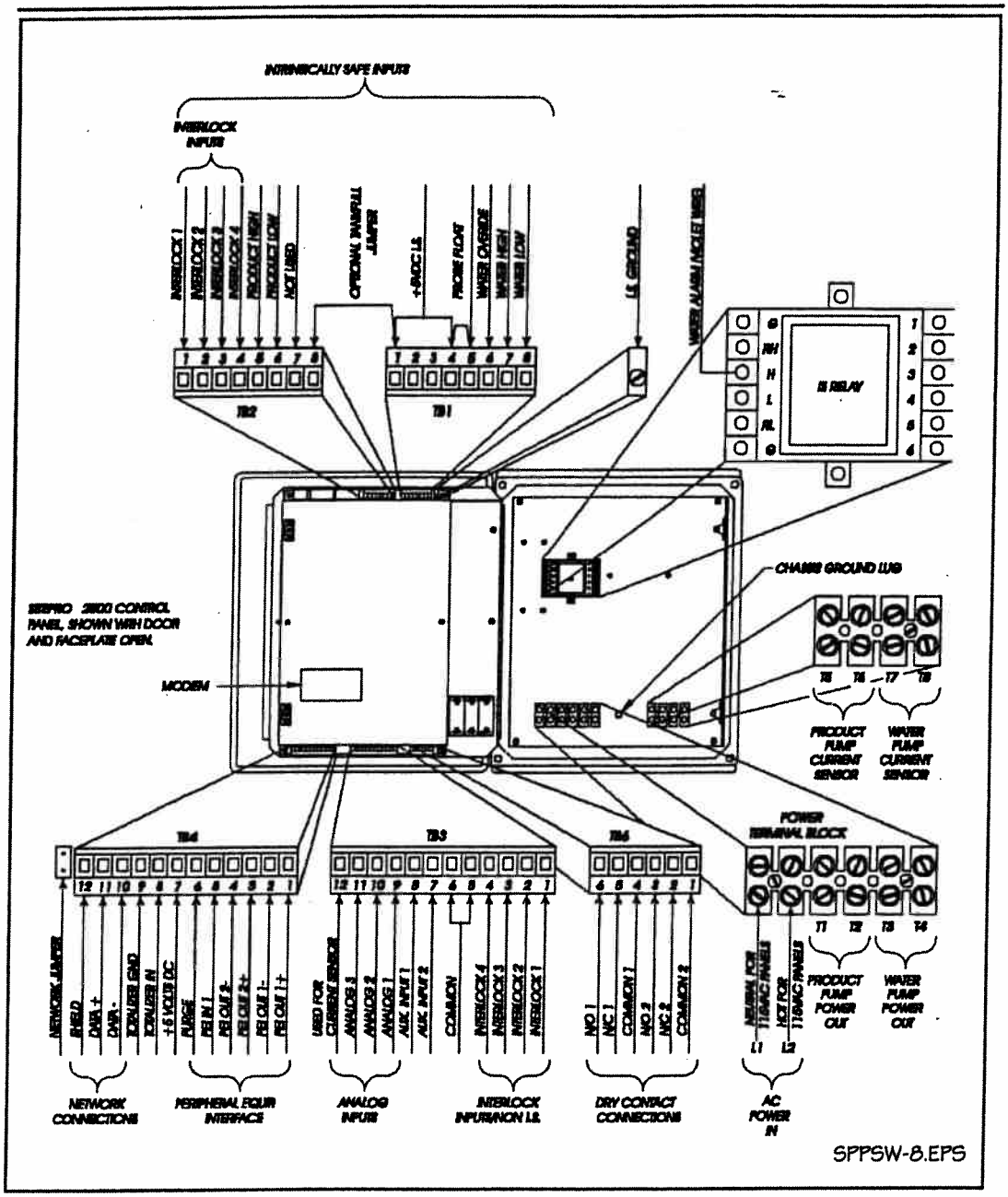

FIGURE 2-1. ORS SITEPRO™ 2000 Wiring Diagram.

Install Intrinsically Safe Ground

Run a separate ground wire from the intrinsically safe ground lug to a good earth ground. The I.S. grounding lug is located next to TB1 on the back of the panel faceplate.

The ***intrinsically safe*** ground wire may be run to the same earth ground stake, service panel, etc.) that is used for the chassis ground. **However separate conductors must be used for these two grounding circuits.**

Wiring access port in the ORS SITEPRO 2000 panel enclosure ***must*** be located as shown in figure 1-2 (p.1-4 in chapter 1). The port on the side of the enclosure is for all ***intrinsically safe*** wiring. All other wiring, including incoming power and pump connections **must** be routed through the bottom of the enclosure.

To maintain the NEMA 4 weatherproof characteristics of your panel after wiring has been completed, seal all wiring access ports with weatherproofs conduit tubs.

Wire Incoming Power

Run power wires through the port at the bottom of the enclosure and attach to the terminal block on the chassis behind the face-plate (Figure 2-1, p.2-3). Attach the power leads to terminals L1 (neutral for 115VAC systems) and L2 (hot for 115VAC systems). Attach the ground wire to the grounding lug next to the terminal block. Check tightness of terminal screws.

The ORS SITEPRO™ 2000 circuit board shield (behind face-plate) is equipped with a label that shows the locations of all the terminals and configuration dip switches. Refer to this label (and Figure 2-1) throughout the panel wiring procedures described in this chapter.

Do not run power wires within two inches of ***intrinsically safe*** (IS) wires or terminals. Refer to Figure 2-1 (p. 2-3) for locations of IS terminals (at top of panel) and reference *NEC* article 508 for relevant codes.

Wire ORS Probe Scavenger™

If your system includes the 12VDC product pump power supply (see the system specification pages at the front of the product manual) wire the product pump to the terminal strip inside the power supply enclosure as shown below. Then run the power wires from the power supply through the bottom of the enclosure and attach to the PRODUCT PUMP POWER OUT terminals (Figure 2-1 p.2-3). Attach the ground wire to the chassis grounding lug next to the terminal block. Check tightness of terminal screws. For installation and wiring instructions specific to your ORS Probe Scavenger™, refer to the blueprint Field Wiring Diagram provided with the pump.

Refer to your pump installation instructions and heed all relevant Warnings and Cautions.

Wire Water Pump

Run the water pump power wires through the bottom of the enclosure and attach to the WATER PUMP OUT terminals (Figure 2-1, p.2-3). Attach the ground wire to the chassis grounding lug next to the terminal block. Check tightness of terminal screws. For installation and wiring instructions specific to your water pump, refer to the blueprint sized Field Wiring Diagram provided with the pump.

Wire Downwell Pump

The ORS SITEPRO™ 2000 Probe Scavenger™/Water Pump Control Panel is design for us with a special ORS density actuated Probe that combines both product and water pumping functions. The probe is wired to the panel as shown in Figure 2-2 (p.2-6).

Run the probe cable through the access port on the side of the enclosure and attach its leads to IS terminal strip TB1 as shown in Figure 2-2 and in the Field Wiring Diagram.

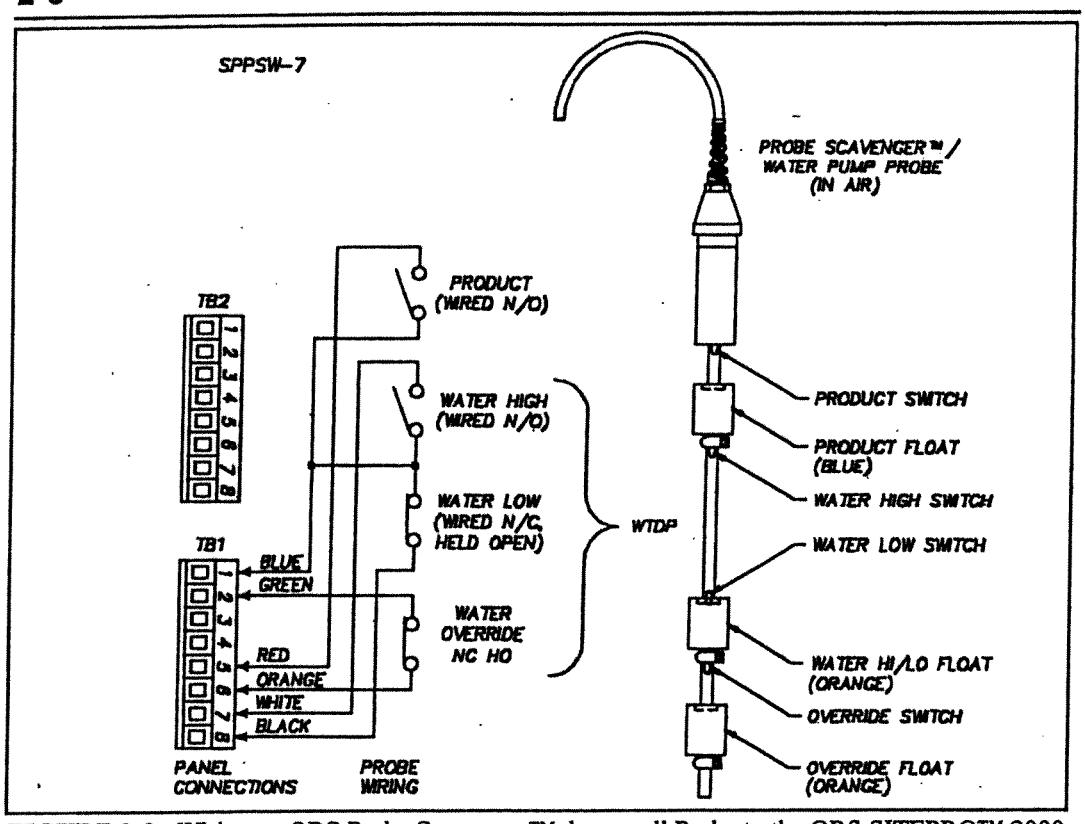

FIGURE 2-2. Wiring an ORS Probe Scavenger™ downwell Probe to the ORS SITEPRO™ 2000 Control Panel

Wire Tankfull Probe

After mounting the tankfull probe in the product recovery tank, run the probe cable into the side of the ORS SITEPRO™ enclosure and attach its leads to ***IS Interlock*** 1 on terminal strips TB1 & TB2. Refer to Figure 2-3, p.2-7 for wiring.

When the optional jumper is installed, a tankfull condition will shut off the products pump <u>only</u>, and will cause the PRODUCT TANKFULL indicator to light. Without the jumper, both pumps will shut off and the PRODUCT TANK FULL indicator will not light.

In multi-panel network applications, a tankfull alarm received by one panel can be Broadcast on the ***Interlock Communication Bus*** to any other panel in the ***network***. This alarm, like any ***interlock alarm***, will shut off any panel in the network that are

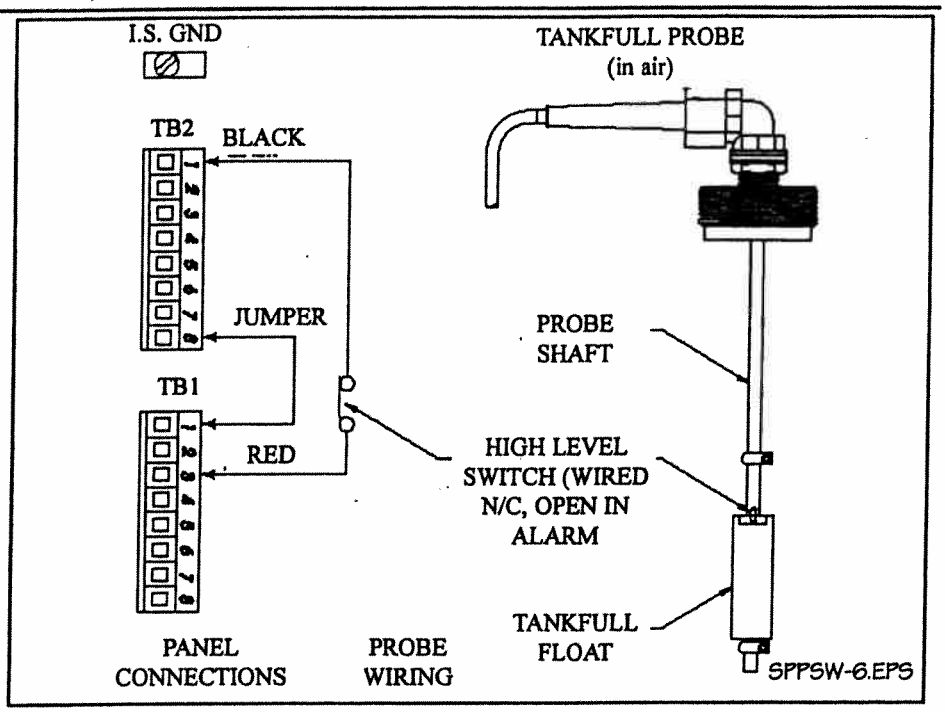

FIGURE 2-3. Wiring a tankfull probe to the ORS SITEPRO™ 2000 Probe Scavenger™/Water pump Control Panel.

configured to receive the ***alarm channel*** to which the interlock is attached (Channel 1 in this case). Therefore, only one tankfull probe is required to shut off an entire ***network*** of ORS SITEPRO™ panels.

Wire Interlocks

The ORS SITEPRO™ 2000 has four ***intrinsically safe*** and four non-intrinsically safe ***interlock*** inputs available for attachment of interlock devices to the panel ***alarm channels***. Geotech suggests a maximum of two interlocks per channel, both must be wired either ***Normally Open or Normally Closed.*** If both switches are wired Normally Closed, however, both must open simultaneously for the panel to respond with an alarm on that channel.

IS Interlock 1 on TB2 is dedicated for attachment of the tankfull probe and is therefore only available for use with other interlock devices when the tankfull probe is not being used.

Never wire both a ***Normally Open*** and a ***Normally Closed interlock*** device to the same channel. Doing so could cause the panel to either lock in alarm or be unable to read an alarm.

Wire each interlock device to the ORS SITEPRO™ panel as follows:

1. Run the ***intrinsically safe interlock*** wires through the access port on the site of the ORS SITEPRO™ enclosure. Run non-intrinsically safe ***interlock*** wires through the port at the bottom of the enclosure. Use 20-25 AWG wire in all cases.

2. For ***intrinsically safe interlocks***, attach one wire to terminal 2, 3 or 4 of TB2 and the other to one of the +5VDC ***intrinsically safe*** terminals on TB1. For ***non-intrinsically safe interlocks***, attach one wire to terminal 1, 2, 3 or 4 of TB3 and the other to one of the COMMON terminals on TB3.

Refer to Figure 2-4 (below) for an example of ***interlock*** wiring.

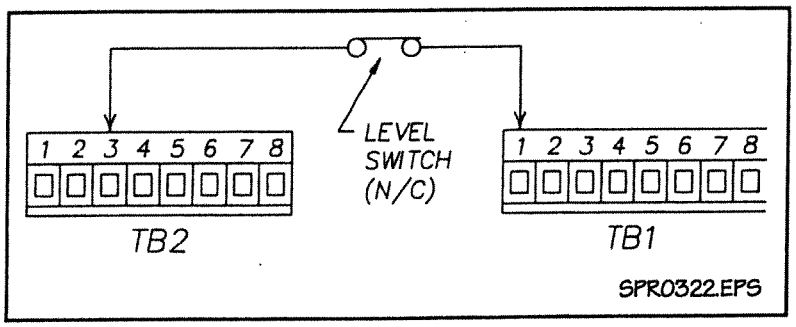

FIGURE 2-4. An ***intrinsically safe Normally Closed*** pressure switch wired to Alarm Channel 4.

In this example, ***Normally Closed*** pressure switch is wired to ***intrinsically safe*** terminal strips TB1 and TB2. Because the switch is wired to terminal 4 on TB2, an alarm will be generated on Channel 4 when the switch opens. The second wire from the switch could be attached to any of the +5VDC ***intrinsically safe*** terminals on TB1.

Wire Network Connections

As your interlocks are installed, keep track of which ones are wired ***Normally Open*** and which are ***Normally Closed***. This information will be required for completion of the system configuration procedures described in Chapter 3.

To wire two or more ORS SITEPRO™ panels together into a network, use a high quality shielded twisted pair cable and wire as shown in Figure 2-5 (below). Wire the conductors from terminals 10 & 11 of TB4 on one panel to the same terminals on the next. On all but the last panel in the network, connect the shield to the terminal 12 on TB4. Do not splice shield segments together.

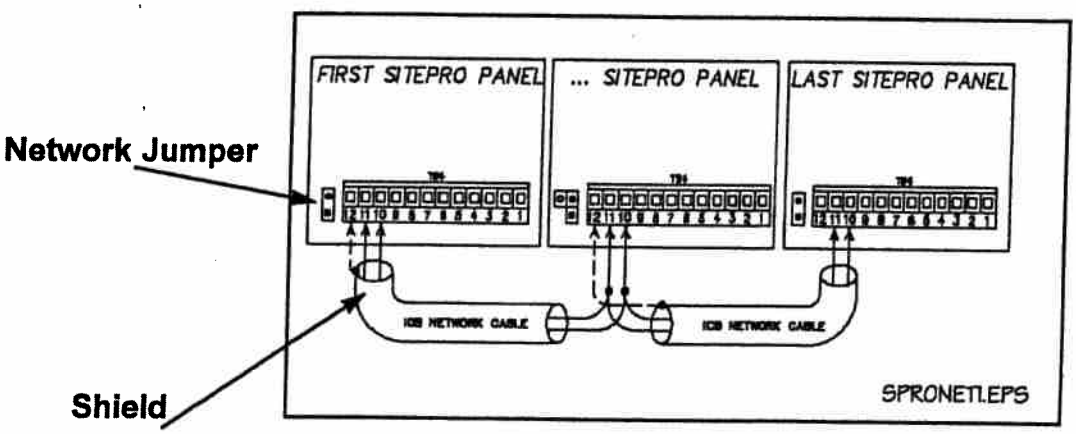

FIGURE 2-5. Three ORS SITEPRO™ panels wired together into a ***network.***

Always wire number to number (color to color) when establishing network connections between panels. The maximum ***network*** wire run cannot exceed 3000' (1000M).

After the ***network*** wiring connections have been made, the start and termination of the ***network*** must be designated by installing jumpers on the first and last panel in the ***network***. Each ORS SITEPRO™ 2000 panel is equipped with a 2-pin jumper located next to TB4 (See Figure 2-5, p.2-9). On the first and last panel in the n***etwork***, lift the jumper cap from the pins and reinstall it so that both pins fit into the cap.

Wire Dry Contact Outputs

The ORS SITEPRO™ 2000 features ***Normally Open*** and ***Normally Closed*** 100 mA ***dry contact*** outputs that can be used to trigger a wide variety of external devices including relays, visual indicators, buzzer, and security system alarms. Two sets of ***Form C dry contact*** outputs are provided on TB6. The example in Figure 2-6 (bellow) shows a security system alarm panel wired in a ***Normally Closed*** configuration to TB6 of the ORS SITEPRO™ 2000. The ***Form C*** outputs are shown schematically (dashed box).

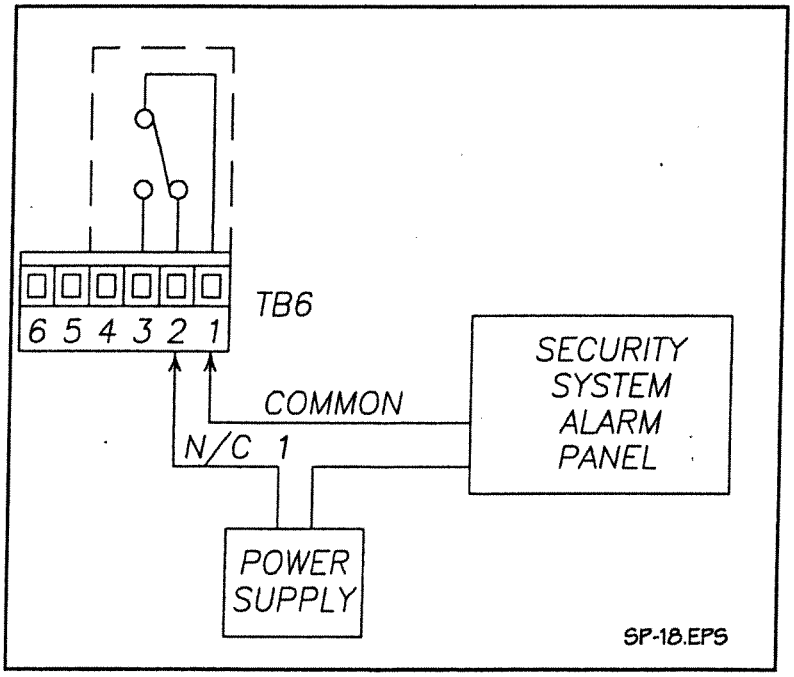

FIGURE 2-6. Using the ORS SITEPRO™ 2000 ***dry contact*** outputs to switch an external security alarm.

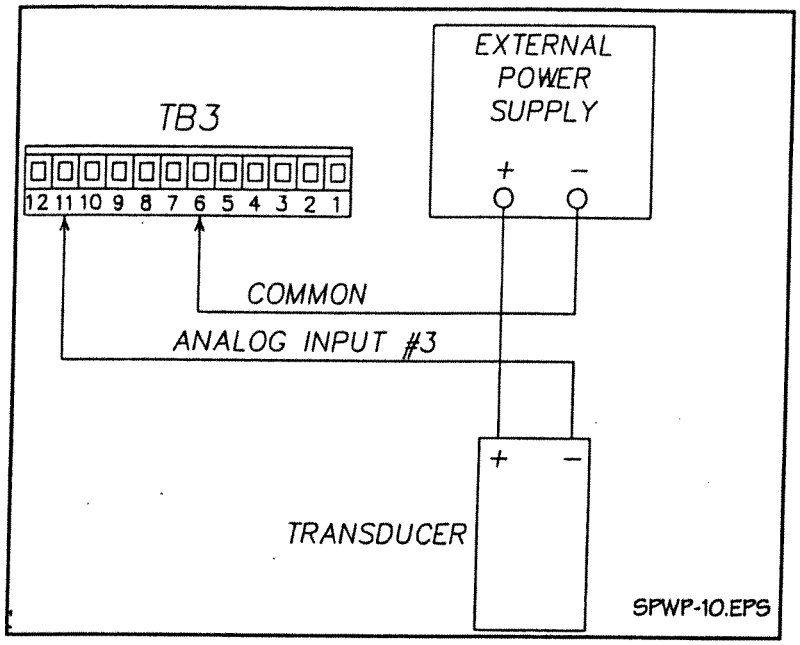

FIGURE 2-7. Wiring a pressure transducer or other analog input device to the ORS SITEPRO™ 2000 analog input connections.

Wire Analog Inputs

Analog input devices (pressure transducers, thermocouples, etc.) can be interfaced with the telemonitor equipped ORS SITEPRO™ 2000 if they are wired into the ***analog*** input connections on TB3 (See Figure 2-1 p. 2-3). Figure 2-7 (above) shows how a pressure transducer might be wired to the ORS SITEPRO™ . Note that the transducer's power supply must be provided by the customer or purchased from Geotech.

Wire Totalizer

Terminals 8&9 on TB4 are available for wiring a totalizer to a panel that is equipped with the telemonitoring option. Totalizers must supply a 0 to 5-24VDC pulse to the control panel. The pulse should be generated by a solid state device (i.e. an open collector output). The pulse should be 1 msec wide minimum. The maximum rate of pulses accepted by the panel is 120 pulses/gallon at 20 gpm this corresponds to 40Hz.

Connect Modem

If your ORS SITEPRO™ 2000 is equipped with the telemonitoring option, plug your phone jack into the receptacle of the panel modem. Refer to Figure 2-1(p. 2-3) for location of modem connections.

In lightning prone areas, have your electrician install a phone line lightning arrestor. Contact your telephone company for further information.

Chapter 3: SYSTEM CONFIGURATION

Chapter Summary
This chapter contains the following information on system configuration:

- ***Introduction*** *- Explains how to use the Network and Panel Configuration sheets provided in Appendix A.*
- ***Configuration Switches****- Describes each of the switches used to configure the ORS SITEPRO™ 2000.*
- ***Configuration Procedures*** *- Explains how to set the configuration switches for a single panel or network applications.*

INTRODUCTION

The ORS SITEPRO™ 2000 has a wide range of capabilities and can be configured on site to match your specific remediation requirements. As you will see as you work through this chapter, the panel configuration procedure is quite straight forward and simple. However, before configuring panels that are part of a complex multi-panel ***network,*** it will be necessary to carry out a certain amount of planning and site organization.

Network Configuration Sheet

To aid you in the design and configuration of multi-panel networks, Geotech provides a Network Configuration Sheet (See Appendix A). This sheet allows the user to specify ***network addresses, interlock hookups*** and ***network*** connections for up to 16 ORS SITEPRO™ control panels. Once the Network Configuration Sheet has been filled out, it can be used as a guide for configuration of the individual panels in the network.

Before attempting to configure your ORS SITEPRO™ panel, read all the information in this chapter and then fill out the Network Configuration Sheet included in Appendix A at the back of the manual.

Panel Configuration Sheet

During the panel configuration procedures described in this chapter, you will be changing the settings of the dip switches shown in Figure 3-1 (p. 3-3). Geotech recommends that you carefully document the final configuration of each of your ORS SITEPRO™ 2000 panels by using the blank Panel Configuration Sheet provided in Appendix A at the back of this manual. Once filled out, this sheet will be a permanent record of your configuration and can be used as a check against inadvertent or unauthorized configurations changes. Be sure to update this sheet whenever configuration changes are made. An up to date Panel Configuration Sheet is an essential troubleshooting tool and must be available for reference whenever you call Geotech for technical assistance.

CONFIGURATION SWITCHES

The configuration process is a simple matter of setting the CONTROLLER ADDRESS, LOGIC and SEND/RECEIVE dip switches mounted on the back side of the panel faceplate. See Figure 3-1 (p.3-3) for switch locations.

CONTROLLER ADDRESS Switches

Function:

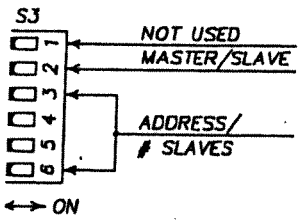

The CONTROLLER ADDRESS switches (mounted on switch S3) are used to 1) configure the panel as either a Master or a Slave, and 2) provide a ***network address*** for each panel in the ***network***. The six individual dip switches are labeled 1-6. Switch 2 is used to configure the panel as a Master (switch set to ON) or as a Slave (switch left in OFF position). Dip switches 3-6 are used to set the ***network address*** of each Slave panel or, if the panel is a Master, to indicate the total number of Slave panels in the network. Switch 1 is not used.

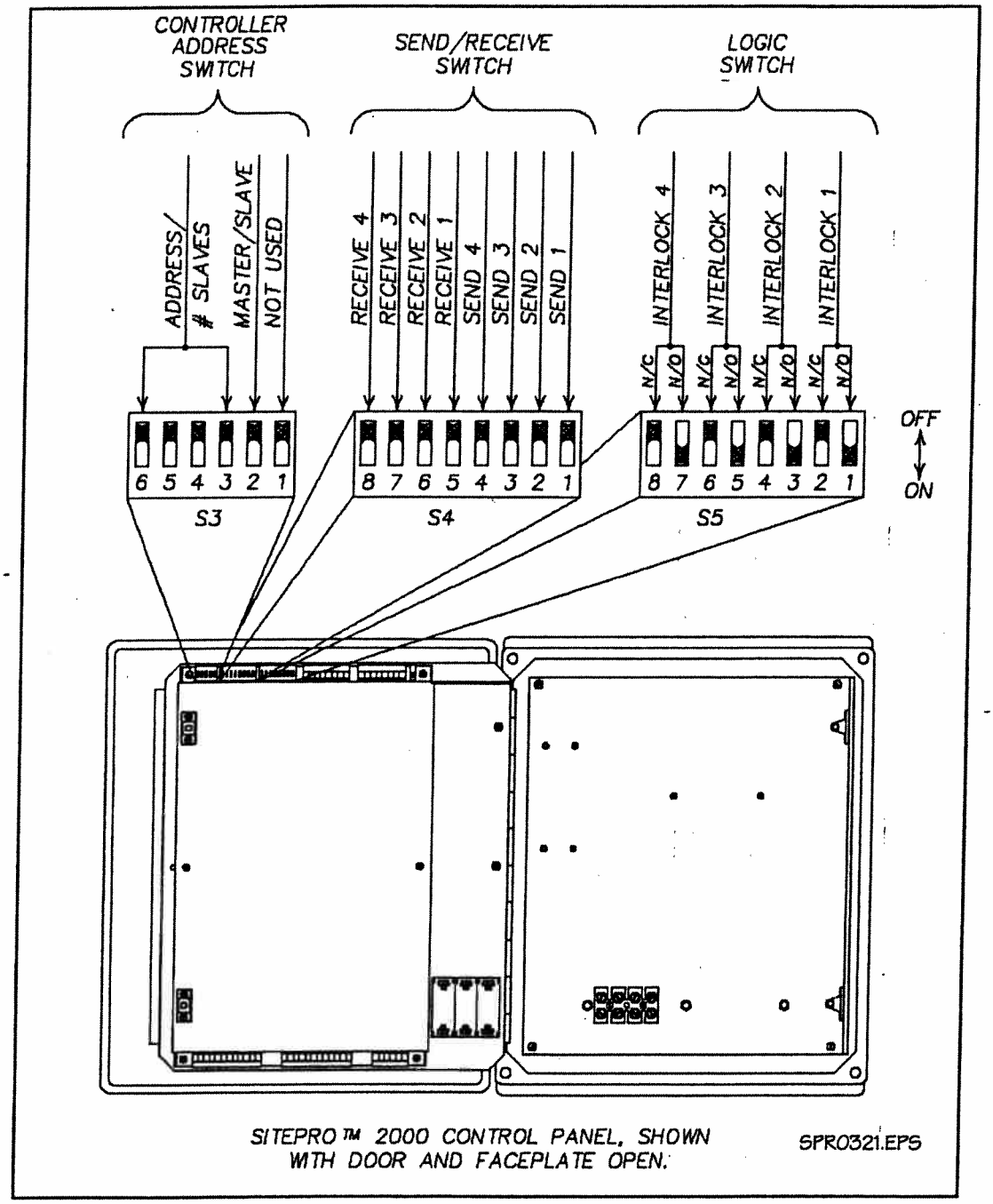

FIGURE 3-1. Locations of configuration switches inside the ORS SITEPRO™ 2000 control panel enclosure.

When Used:

Set the CONTROLLER ADDRESS switches only when panel is part of a multi-panel ***network.***

LOGIC Switches

Function:

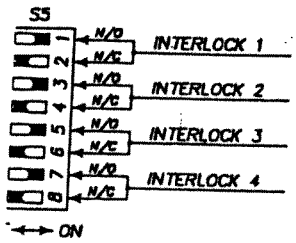

The LOGIC switches (mounted on switch S5) are used to configure the ORS SITEPRO™ to interpret the ***Normally Open*** (N/O) or ***Normally Closed*** (N/C) status of the ***interlock*** devices wired to the panel. Each of the four pairs of dip switches is associated with one of the four ***alarm channels***. As delivered from the factory, the LOGIC dip switches are set in the N/C position as shown on the left.

When Used:

Set the Appropriate LOGIC switches whenever external ***interlock*** devices are wired to the panel.

SEND Switches

Function:

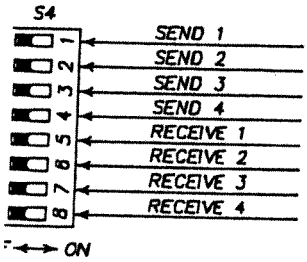

The SEND dip switches are mounted along with the RECEIVE dip switches on switch S4 (see Figure 3-1,p.3-3). The settings of the SEND switches determine whether or not alarms are broadcast to other panels on the ***Interlock Communication Bus***. The four SEND dip switches are numbered 1-4 and correspond to ORS SITEPRO™ ***alarm channels*** 1-4, respectively.

When Used:

Set one or more SEND switch whenever a panel requires the capacity to shut off other panels in a multi-panel ***network.***

RECEIVE Switches

Function:

The settings of the RECEIVE dip switches determine whether or not a panel is shut off by alarms generated locally by external ***interlock*** devices or received from other panels over the ***Interlock Communication Bus***. The four RECEIVE dip switches are numbered 5-8 and correspond to ORS SITEPRO™ ***alarm channels*** 1-4 respectively.

When Used:

Set one or more RECEIVE switch when you want a panel to be shut down either by a local ***interlock*** device or by an alarm received from another panel.

PANEL CONFIGURATION PROCEDURES

The following sections provide step by step instructions for configuring your ORS SITEPRO™ 2000 panel. Throughout the remainder of this chapter, refer to Figure 3-1 (p.3-3) for locations of all configuration switches and to the System Configuration Flowchart (Figure 3-2, p.3-6) for an overview of panel configuration procedures.

Before changing the setting of any configuration dip switch, turn the CONTROL POWER switch to OFF. After configuring the panel, turn the switch back to ON.

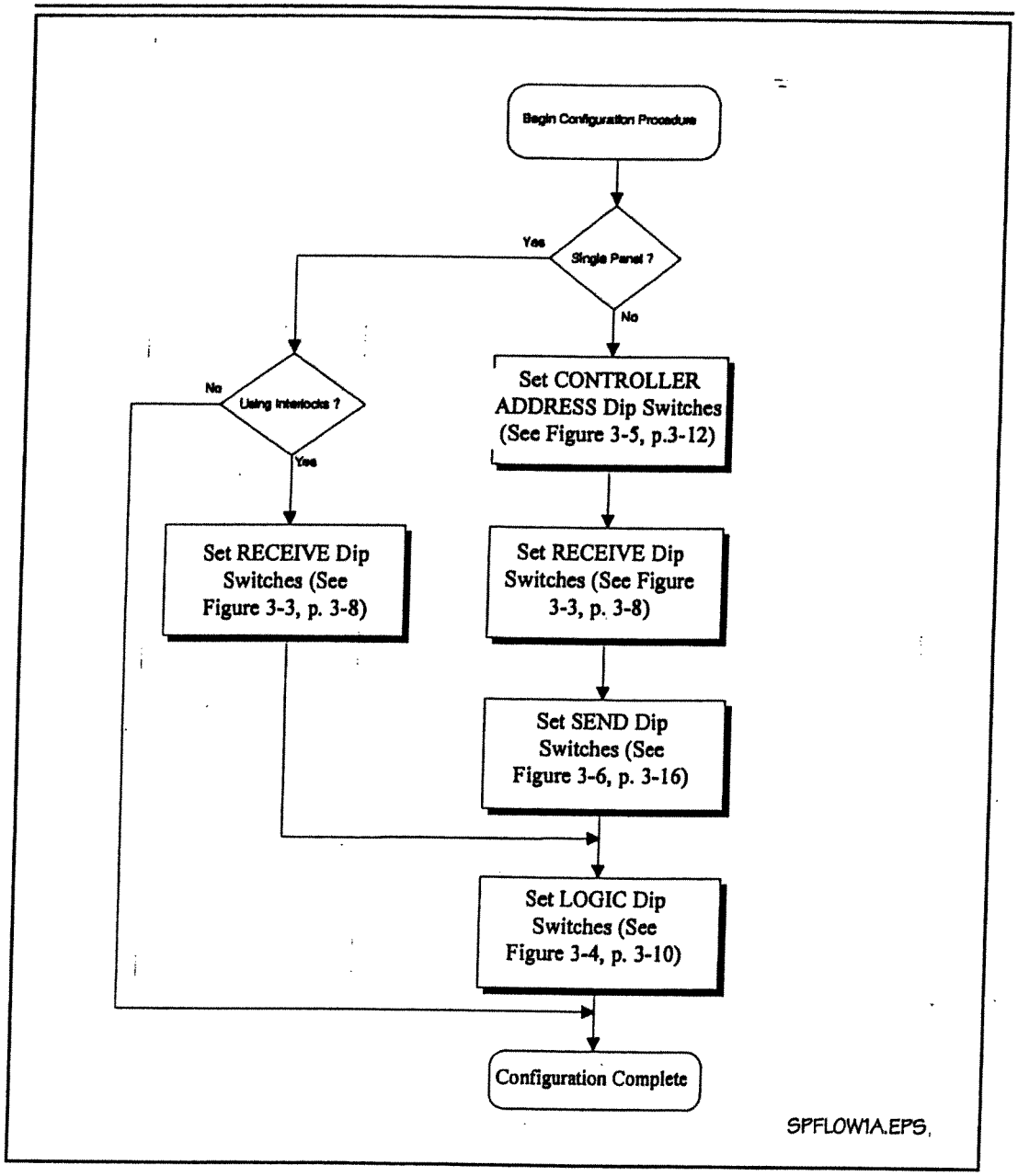

FIGURE 3-2. System Configuration Flowchart for the ORS SITEPRO™ 2000 Control Panel. Refer to this top level flowchart for an overview of the configuration procedure. Use the supplementary flowcharts in Figure 3-3, 3-4, 3-6, and 3-7 for step by step switch setting procedures.

Single Panel Applications

Basic Pump Control

If you have have a single ORS SITEPRO™ panel that is being used strictly as a water pump controller and has no external ***interlock*** or ***network*** connections, no system configuration is required. Proceed directly to chapter 4 startup and operation instructions.

Configuring for Interlocks

If you are using a single ORS SITEPRO™ panel with external ***interlock*** devices, the panel must be configured to receive the sensor input and react appropriately. This is accomplished by setting the RECEIVE and LOGIC dip switches as detailed in the flowcharts in Figures 3-3 (p.3-8) and 3-4 (p.3-10).

Set RECEIVE Switches

Set the RECEIVE switches according to the flowchart Figure 3-3 on page 3-8.

The four dip switches on the RECEIVE switch are numbered 5-8 and coincide with ***alarm channels*** 1-4, respectively. The switches also coincide with ***interlock*** input terminals 1-4 on terminal strips TB2. See figures 2-1 (p.2-3) and 3-1 (p.3-3) for terminal and switch numbering. For example, if an external ***interlock*** device is wired to terminals 1 and 5 (common) on connector TB3, turn RECEIVE dip switch 5 to the ON position as shown below.

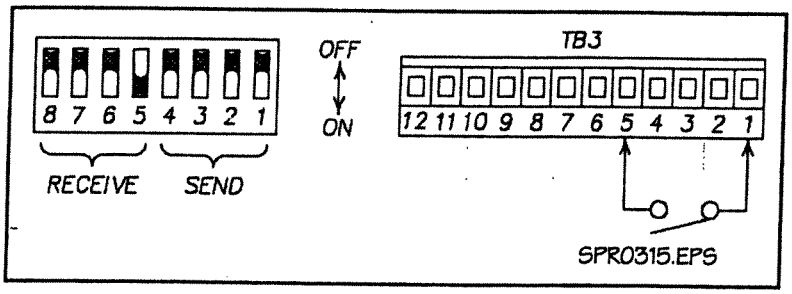

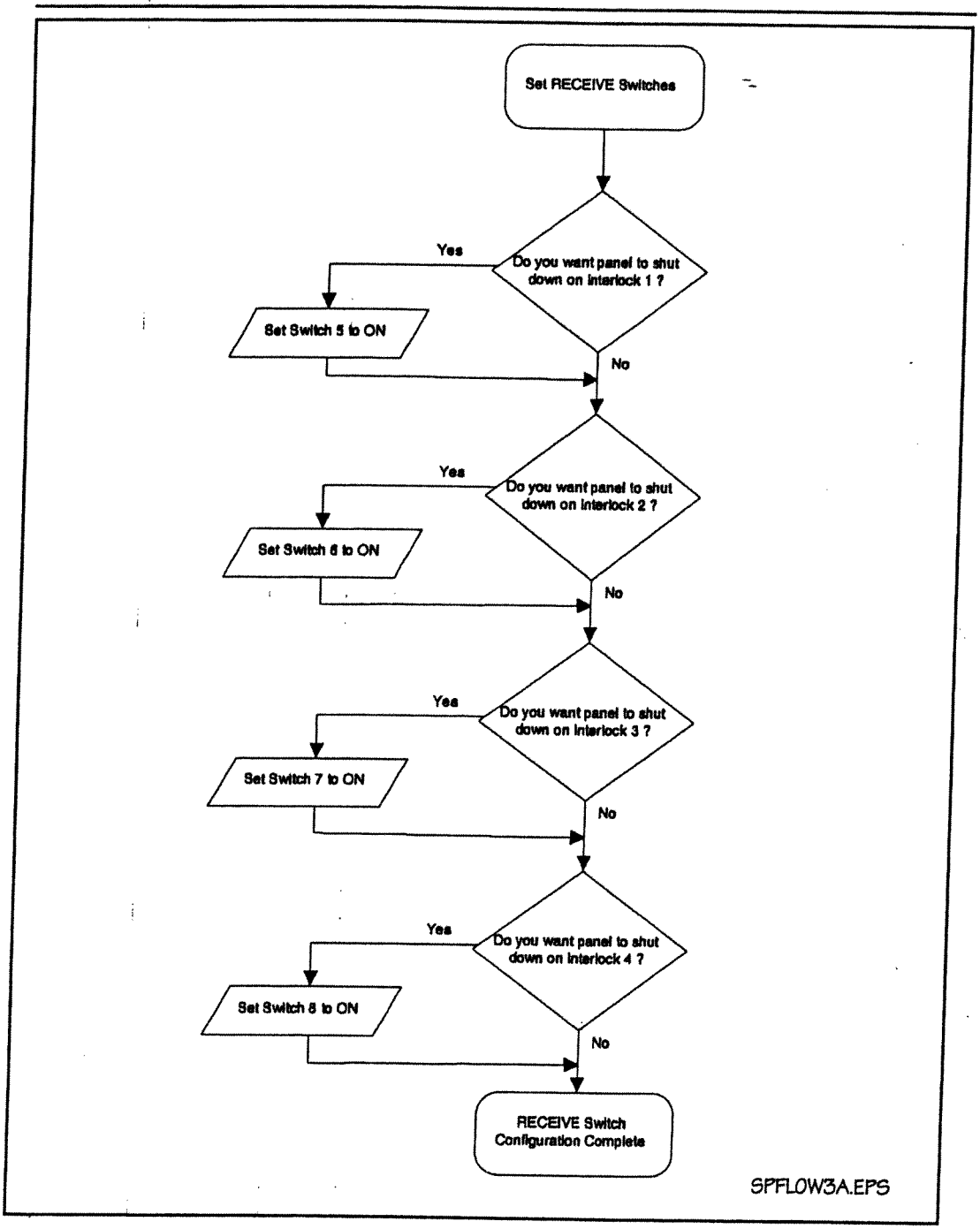

FIGURE 3-3. Flowchart for setting the ORS SITEPRO™ 2000 RECEIVE Switches.

This will connect the external ***interlock*** device ***alarm channel*** 1 and will permit the panel to react to signals generated by this device.

When setting dip switches, use the tip of a ball point pen to move the switch levers.

If a RECEIVE dip switch for a particular ***alarm channel*** is left in the OFF position, the panel cannot be shut down by an alarm on that channel. However, it is important to understand that even if a RECEIVE dip switch is set to the OFF position, any alarms on that channel will enter the panel and can then be broadcast to other panels in the ***network***, provided the SEND switch for that channel is set to ON. In other words, the RECEIVE switches do not control the flow of information on the ***network***, rather they determine how each panel reacts to incoming information.

Set LOGIC Switches

Set the LOGIC dip switches according to the flowchart in Figure 3-4 (p.3-100).

Each external ***interlock*** device attached to the ORS SITEPRO™ 2000 is wired either ***Normally Open*** (N/O) or ***Normally Closed*** (N/C). The LOGIC switches are used to configure the panel to interpret the switching status of these devices and incorporates two dip switches (N/O and N/C) for each of the four ***alarm channels.***

Configuring the LOGIC switches is a simple matter of selecting either the N/O or N/C setting for each channel to which an external ***interlock*** device is attached. For example, if a ***Normally Open interlock*** device is wired to ***alarm channel*** 3, locate the channel 3 section of the LOGIC switch (dip switches 5 & 6) and set the N/O switch (dip switch 5) to the ON position as shown on page 3-11. Turn the N/C switch (dip switch 6) OFF.

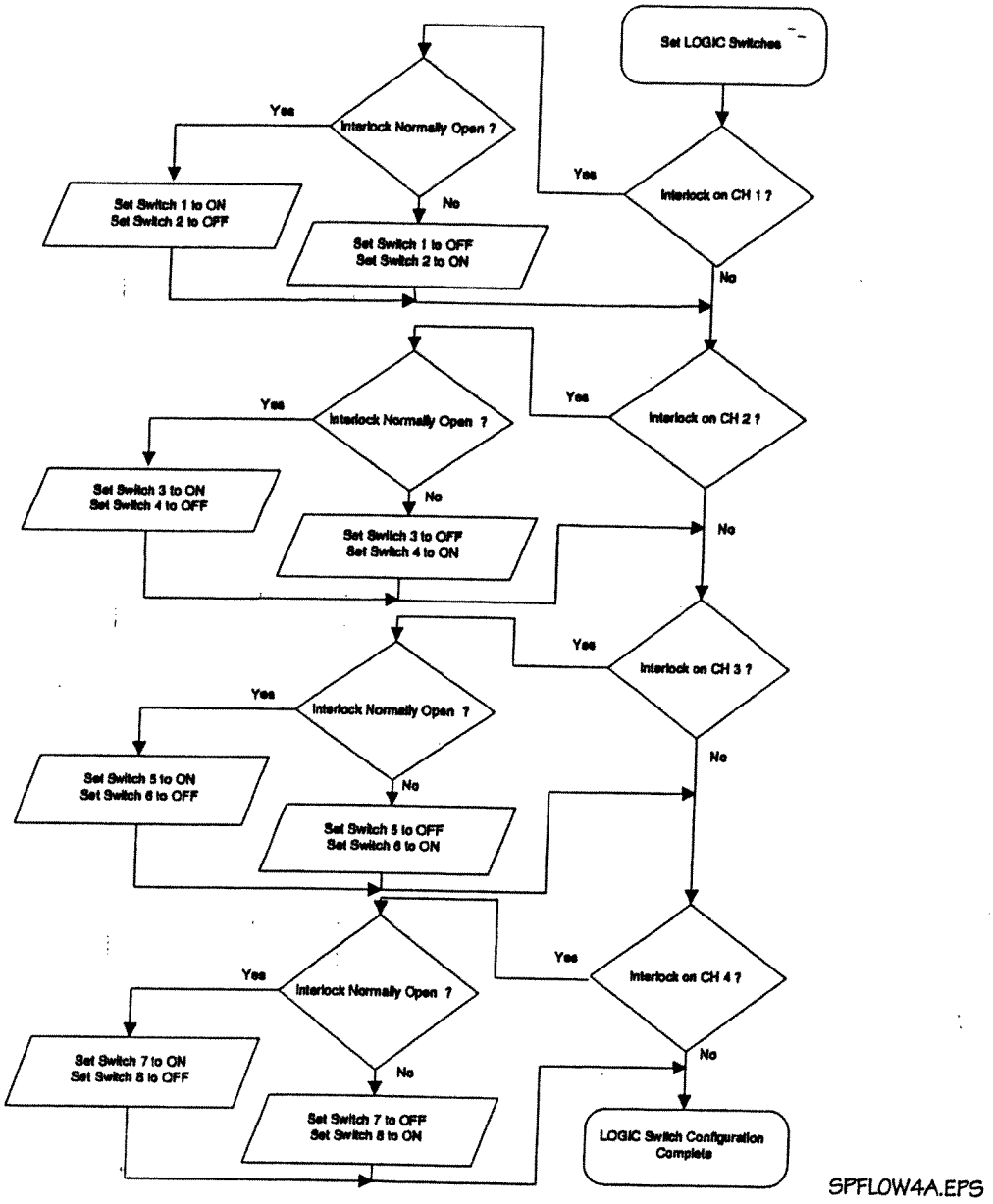

FIGURE 3-4. Flowchart for setting the ORS SITEPRO™ 2000 LOGIC Switches.

If possible, wire external interlock devices ***Normally Closed*** so that they open on alarm. Such circuits are fail safe in that an alarm will be generated if a wire is broken.

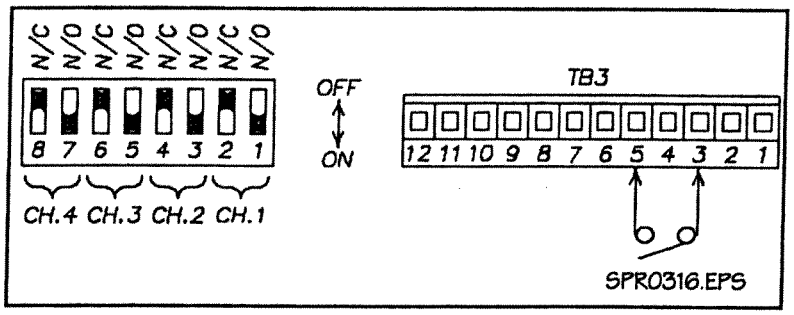

When configuring the LOGIC switch for a channel, never set both the *Normally Open* and *Normally Closed* switches to the ON or OFF position. Doing this could cause the panel either to lock in alarm or be unable to read an alarm.

Network Applications

When multiple pumps or blowers are used together at a remediation site, it is often desirable to tie the control panels together into a coordinated ***network.*** The ORS SITEPRO™ embedded software will support networks of up to 16 control panels.

Configure the ORS SITEPRO™ 2000 for ***network*** operation by setting the CONTROLLER ADDRESS, LOGIC and SEND/RECEIVE switches.

Set CONTROLLER ADDRESS Switches

An important step on configuring ORS SITEPRO™ 2000 ***network*** is to organize the flow of information on the ***Interlock Communication Bus*** to prevent lost signals resulting from the simultaneous broadcast of multiple alarms. This is done by designating one panel as ***network*** Master and by assigning a unique ***network address*** to each of the remaining Slave panels.

The Master then polls the Slaves in a set sequence determined by the numerical order of the ***network addresses*** an allows each Slave to broadcast any alarms it has received from external ***interlock*** devices.

configure the CONTROLLER ADDRESS switches according to the flowchart in Figure 3-5 (bellow).

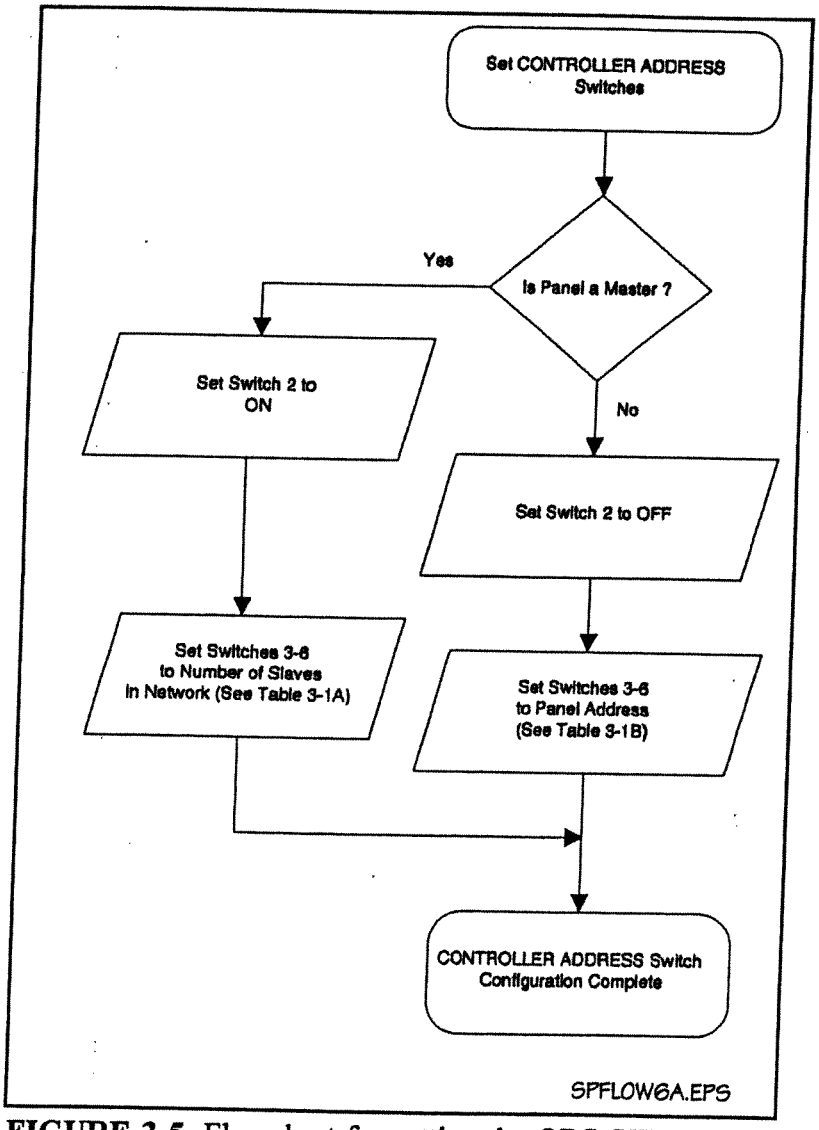

FIGURE 3-5: Flowchart for setting the ORS SITEPRO™ 2000 CONTROLLER ADDRESS Switches

The settings of dip switches 3-6 are determined by using the tables below. Use Table 3-1A for Master panels and Table 3-1B for Slave panels.

If the panel is to be configured as a Master, set dip switch 2 to ON and set dip switches 3-6 to indicate the total number of Slaves in the ***network*** (maximum 15). Table 3-1A provides dip switch settings for each of the possible number of Slaves in the ***network.***

If the panel is to be configured as a Slave, set dip switch 2 to OFF and set dip switches 3-6 to indicate the ***address*** of the panel on the network. Use Table 3-1B to determine the settings of dip switches 3-6 on Slave panels.

MASTER PANELS

NUMBER OF SLAVE PANELS IN NETWORK	SETTINGS FOR DIP SWITCHES 3–6			
	6	5	4	3
1	ON	OFF	OFF	OFF
2	OFF	ON	OFF	OFF
3	ON	ON	OFF	OFF
4	OFF	OFF	ON	OFF
5	ON	OFF	ON	OFF
6	OFF	ON	ON	OFF
7	ON	ON	ON	OFF
8	OFF	OFF	OFF	ON
9	ON	OFF	OFF	ON
10	OFF	ON	OFF	ON
11	ON	ON	OFF	ON
12	OFF	OFF	ON	ON
13	ON	OFF	ON	ON
14	OFF	ON	ON	ON
15	ON	ON	ON	ON

D10410A.EPS

A.

SLAVE PANELS

SLAVE NETWORK ADDRESS	SETTINGS FOR DIP SWITCHES 3–6			
	6	5	4	3
1	ON	OFF	OFF	OFF
2	OFF	ON	OFF	OFF
3	ON	ON	OFF	OFF
4	OFF	OFF	ON	OFF
5	ON	OFF	ON	OFF
6	OFF	ON	ON	OFF
7	ON	ON	ON	OFF
8	OFF	OFF	OFF	ON
9	ON	OFF	OFF	ON
10	OFF	ON	OFF	ON
11	ON	ON	OFF	ON
12	OFF	OFF	ON	ON
13	ON	OFF	ON	ON.
14	OFF	ON	ON	ON
15	ON	ON	ON	ON

D10410B.EPS

B.

TABLE 3-1. Dip switch settings for CONTROLLER ADDRESS dip switches 3-6 in Master (A) and Slave (B) panels.

Start at the lowest ***address*** (1) and work up (top to bottom in Table 3-1B) with each Slave panel configured.

In Example #1(below), the CONTROLLER ADDRESS switch settings that the panel is a master and that are 12 Slave panels in the ***network.***

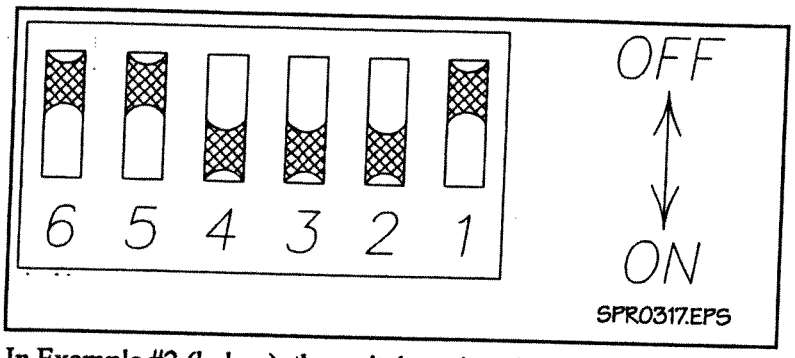

In Example #2 (below), the switch settings indicate that the panel is a Slave and that is has been allocated the network address of 2.

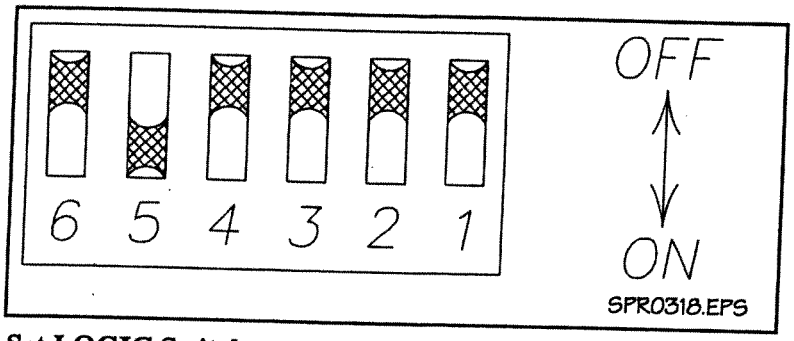

Set LOGIC Switches

Configure the LOGIC dip switches exactly as you would for single panel systems. For each external ***interlock*** device wired to the ORS SITEPRO™ panel, the corresponding LOGIC switches must be set for either ***Normally Open*** or ***Normally Closed*** status.

As mentioned in the section on single panel configuration, wire external ***interlock*** devices ***Normally Closed*** so that they open on alarm. Such circuits are fail safe in that an alarm will be generated if wire is accidentally broken.

Set RECEIVE switches

In multi-panel ***networks***, the procedure for setting the RECEIVE dip switches is exactly the same as that used for single panel applications. However, it should be emphasized that in ***network*** applications, alarms can be generated either by local external ***interlock*** devices wired directly to the panel or by alarms broadcast by other panels on the ***Interlock Communication Bus***. For example, if the Channel 1 dip switch (dip switch 5) is set to ON, the panel will be shut down if, 1) a local ***interlock*** device wired to channel 1 generates an alarm, or 2) one of the other panels in the ***network*** broadcasts an alarm on Channel 1. Therefore, the question that must be asked when setting a panel's RECEIVE dip switches is, "Under what conditions do I want this panel to shut down?" Refer to your Network Configuration Sheet and Set the receive dip switches according to the flowchart in Figure 3-3 (p. 3-8).

Set SEND switches

The settings of the SEND Switches determine which panels in the ***network*** can be shut down by alarm present on the ***alarm channel's*** of the panel being configured. These four dip switches are labeled 1-4 to correspond with the four ***alarm*** channels. Refer to your Network Configuration Sheet and set the send dip switches according to the flowchart in Figure 3-6 (p. 3-16).

When a send dip switch is set to the ON position, any alarm on that channel will be broadcast on the ***Interlock Communication Bus.*** However, only those panels on the ***network*** whose RECEIVE switches are configured to "listen" to that channel will react to the alarm.

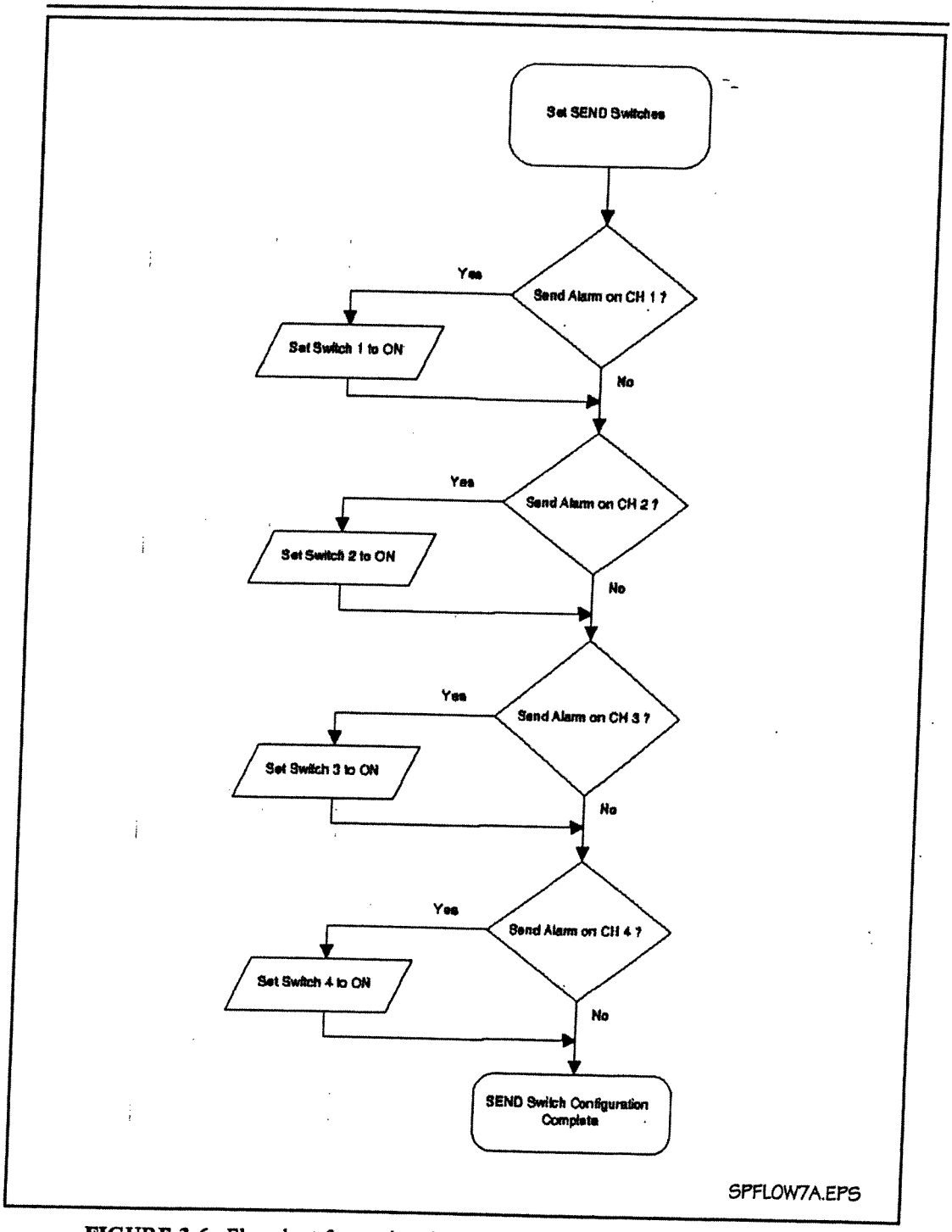

FIGURE 3-6. Flowchart for setting the ORS SITEPRO™ 2000 SEND Switches.

Network Configuration Example

The following example describes a simple ORS SITEPRO™ network and shows how the CONTROLLER ADDRESS, LOGIC and SEND/RECEIVE switches are configured to achieve the desired system behavior.

This example refers to the simple two panel ***network*** shown in figure 1-6 (. 1-13 in chapter 1). In the example, two Probe Scavenger/Water Pump Systems deliver hydrocarbon to a product recovery tank and contaminated water to an oil/water separator. A tankful probe is mounted in the product recovery tank and wired to panel #1 (the Master). A high level shutoff switch is mounted in the oil/water separator and wired to panel #2 (the Slave). Both switches are wired Normally Closed. The two panels are linked by a network cable so that all the pumps will be shut off either the product recovery tank of oil/water separator becomes full.

Interlock & Network Wiring

The tankfull probe is wired to terminal 1 on TBW2 and terminal 2 on TB1 (Panel #1), while the high level shutoff switch is wired to terminal 3 on TB2 and terminal 1 on TB1 (Panel #2). The ***network*** connection is made between terminals 10, 11 & 12 on TB4 of panel #1 to the corresponding terminals on Panel #2.

Panel#1 Configuration

CONTROLLER ADDRESS Switch:

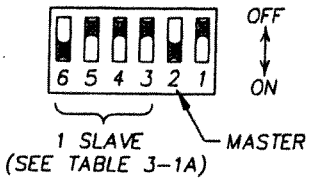

SPR027.EPS

LOGIC Switch:

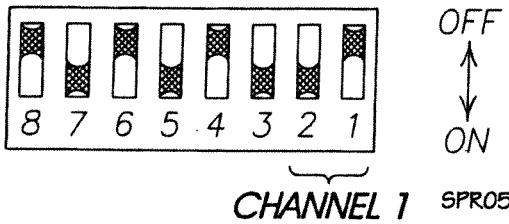

SPR055.EPS

SEND/RECEIVE Switch:

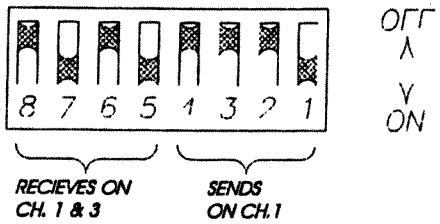

SPR056.EPS

Panel #2 Configuration

CONTROLLER ADDRESS Switch:

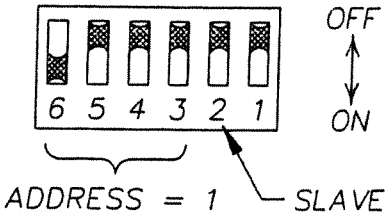

SPR0311.EPS

LOGIC Switch:

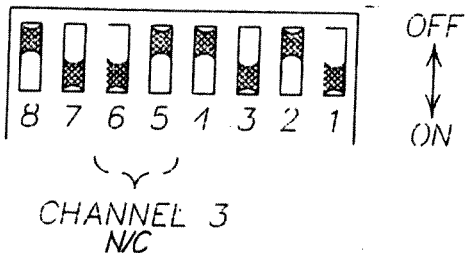

SPR039.EPS

SEND/RECEIVE Switch:

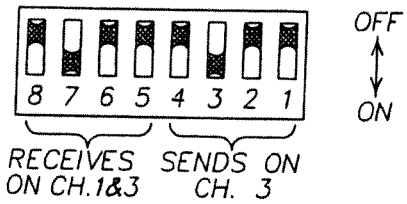

SPR0310.EPS

System Operation Sequence#1

1. The product recovery tank becomes full and causes the ***Normally Closed*** tankful probe wired to Channel 1 of Panel #1 to open.

2. Because Panel #1 is configured to receive on Channel 1, Panel #1 shuts off.

3. Because Panel #1 is configured to send on Channel 1, an alarm, is broadcast on Channel 1 of the ***ICB.***

4. Because Panel #2 is configured to receive on Channel 1, Panel #2 shuts off.

System Operation Sequence #2

1. The oil/water separator becomes full and causes the ***Normally Closed*** high level shutoff switch wired to Channel 3 of Panel #2 to open.

2. Because Panel #2 is configured to receive on Channel 3, Panel #2 shuts off.

3. Because Panel #2 is configured to send on Channel 3, an alarm is broadcast on Channel 3 of the ***ICB***.

4. Because Panel #1 is configured to receive on Channel 3, Panel #1 shuts off.

As demonstrated above, an individual ORS SITEPRO™ panel is easy to configure. Although the example used in this chapter referred to a very simple ORS SITEPRO™ 2000 ***network***, the switch setting procedures described are exactly those used to configure more complex ***networks.***

Remember to Document Your Configuration

Whenever you configure an ORS SITEPRO™ 2000 panel, always record the switch settings on the Panel Configuration Sheet provided in Appendix A at the back of this manual. Good housekeeping habits are specially critical when you are configuring a complicated multi-panel ***network.***

Chapter 4: SYSTEM OPERATION

Chapter Summary
This chapter contains the following information on ORS SITEPRO™ 2000 operation:

- ***Controls & Indicators***- *Description of panel controls and indicators.*
- ***System Precheck*** - *Panel and Probe checkout procedures.*
- ***Startup*** - *Startup procedures for single and networked panels.*
- ***Operation*** - *Tracing and clearing alarms.*

As is explained in Chapter 1 of this manual (see Figure 1-3, p.1-8), the ORS SITEPRO™ 2000 can be operated in any one of the following three user interface modes:

1. Manual Operation Mode

2. Local Communication Mode

3. Remote Communication Mode

This chapter provides all the information required to manually operate the ORS SITEPRO™ 2000 Probe Scavenger™/Water Pump Control panel in either single panel or network environments. If your system includes the optional telemonitoring, refer to the ORS SITEPRO™ Manager software manual for information on operating in the Local Communication or Remote Communication modes.

PANEL CONTROL & INDICATORS

The following sections describe the functions of all the controls and indicators used by the ORS SITEPRO™. Refer to Figure 4-1 (p.4-2) for locations of controls and indicators on the panel faceplate.

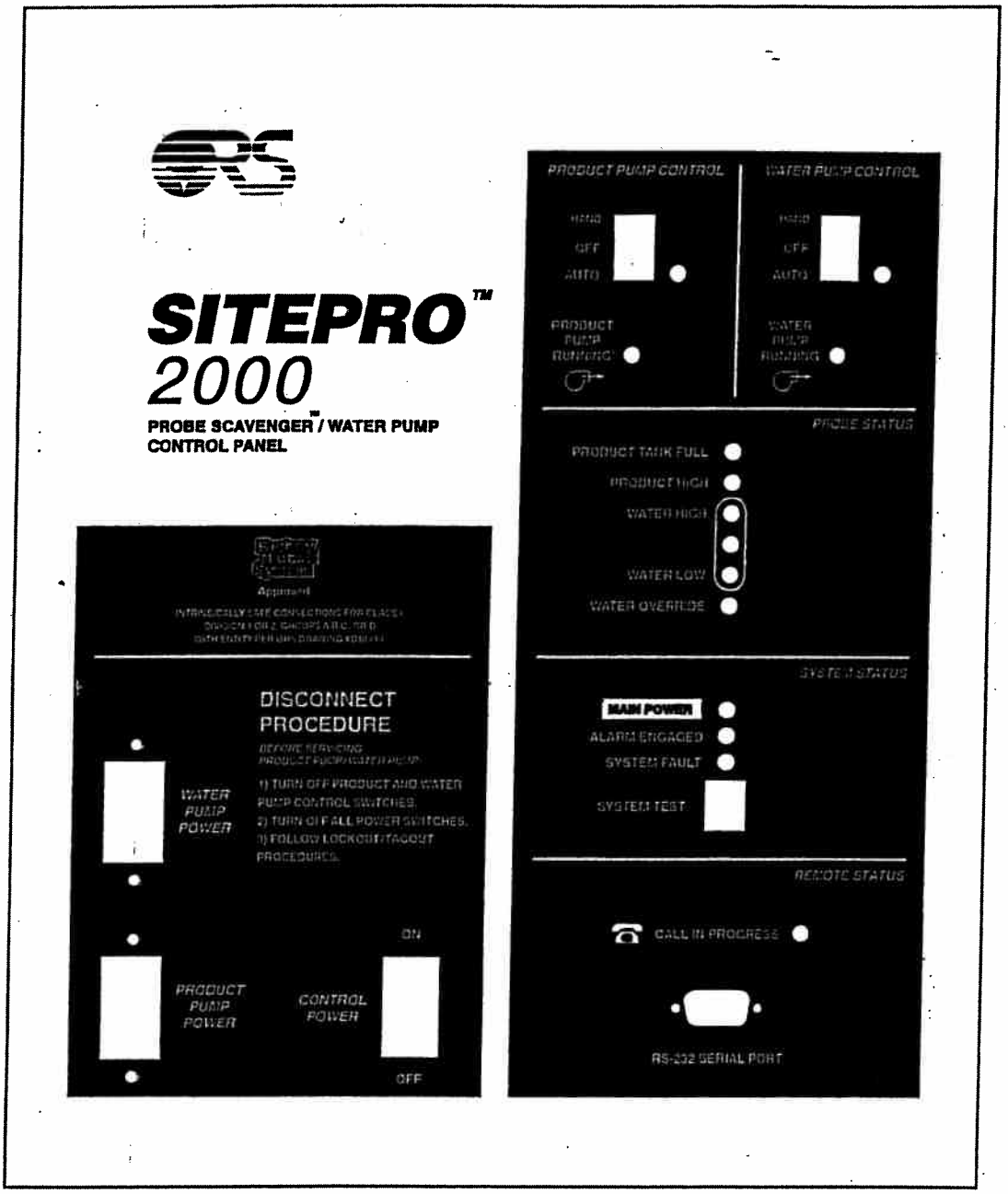

FIGURE 4-1. The ORS SITEPRO™ 2000 Probe Scavenger™/Water Pump Control Panel face-plate showing controls and indicators.

The ORS SITEPRO™ 2000 Probe Scavenger™/Water Pump Control Panel features controls and indicators for separate water and product pumps. These controls are described under the heading **Pump Control Functions** beginning on page 4-6. Controls and indicators associated with general functions (System test, etc.) are described in a separate section under the heading **General Panel Functions**, below.

GENERAL PANEL FUNCTIONS

CONTROL POWER Switch

The CONTROL POWER switch controls distribution of power to the panel's ***microprocessor.*** When this switch is in the OFF position, no power can reach the system control circuitry, switches or indicators.

SYSTEM TEST Button

Single Panel Applications

In single panel applications, the SYSTEM TEST button activates the ORS SITEPRO™ 2000 self-test routine. Self-test is automatically activated each time the panel is powered up or is manually activated whenever the SYSTEM TEST button is pushed. Self-test consists of the following checks.

- Check all indicators . (SYSTEM FAULT indicator blinks if problem found).
- Perform ***RAM*** test. (Checks all memory locations for proper function; SYSTEM FAULT indicator blinks if problem found).
- Perform ***ROM*** test. (Checks program memory; SYSTEM FAULT indicator blinks if problem found).

- Perform *A/D* test. (Checks *A/D* converter; SYSTEM FAULT indicator blinks if problem found).
- Perform Clock test. (Checks accuracy of clock; SYSTEM FAULT indicator blinks is problem found).
- Perform Purge test. (Checks panel purge pressure in purged panels; SYSTEM FAULT indicator blinks if problem found).

Network Applications

When your ORS SITEPRO™ panel is part of a ***network***, the SYSTEM TEST button provides an additional alarm diagnostic feature. When the button is pressed, the ALARM ENGAGED indicator blinks the ***alarm channels*** of all the ***alarms*** present on the ***Interlock Comunication Bus*** in the order in which they occurred. The sequence of alarms blinks is repeated three times and the self-test routine is run as described on p.4-3. If the button is pressed again the process above will be repeated.

SYSTEM STATUS Indicators

The system status indicators provide information on the ***Interlock Communication Bus*** (ICB), aid in the diagnosis of systems errors and display the power status of the panel. Indicator functions are described below:

MAIN POWER

When illuminated, power is reaching the system microprocessor. When blinking, the panel is waiting to get the ICB.

ALARM ENGAGED

This indicator provides information in the status of the panel's ***alarm channels***. During routine panel operation (SYSTEM

TEST button not pressed), the indicator can be in any of the three states;

- **Off** - No alarms are being received by the panel either from local interlock devices or from the ***Interlock Communication Bus.***

- **Steadily illuminated** - The panel has been shut down by an alarm broadcast on the ***Interlock communication Bus.***

- **Blinking** - The panel has received the first alarm from an interlock connected to the panel. The panel may or may not be shut down depending upon setting of its RECEIVE switch. The indicator will fast blink after a manual RESET until all alarms are cleared.

In the ***network*** applications, the ALARM ENGAGED indicator can be used to detect and trace alarms on the ***Interlock Communication Bus.*** If the system test button is pressed once, the ALARM ENGAGED indicator will blink to indicate which ***alarm channels*** have been activated. The ***alarm channel*** codes (one blink = channel 1, etc.) will be displayed in the order in which they originally occurred. For example, if a tank high level alarm on Channel 1 shuts down a pump that caused a subsequent high level ***alarm*** on Channel 2, the ALARM ENGAGED indicator would blink one, pause, and then blink twice. This sequence will be repeated three times.

If no alarm is present on the ***Interlock Communication Bus,*** the panel will go into its self-test routine when the SYSTEM TEST button is pushed.

SYSTEM FAULT

When flashing, the panel self-test procedure has detected an error. Refer to "PROBLEM SOLVING"(Chapter 6) for error code interpretation.

REMOTE STATUS Indicators

This section of the panel faceplate is dedicated to functions related to the telemonitoring option.

CALL IN PROGRESS

This indicator is steadily illuminated whenever the modem is in use for either an incoming or outgoing call. Do not use the ***RS-232*** Serial Port while the CALL IN PROGRESS indicator is illuminated. Doing so will terminate any ongoing call and may cause the local access capability to malfunction. When blinking. the CALL IN PROGRESS indicator alerts the user to a fault in the telemonitoring electronics. Call Geotech for assistance.

PUMP CONTROL FUNCTIONS

PUMP POWER Switches

The WATER PUMP POWER and PRODUCT PUMP POWER switches operate the circuit breakers for the pumps. When either of these switches is turned to the ON position, power is applied to its pump whenever the control relay is closed. When these switches are turned to the OFF position, power cannot be applied to the pumps regardless of the settings of any other panel controls.

Before working on the pumps, the operator must (1) turn the PUMP POWER switches to OFF (2) turn the CONTROL POWER switch to OFF and (3) secure the panel door according to standard lockout/tagout procedures.

PUMP CONTROL Switches

These are three position switches with HAND, OFF and AUTO positions. Both WATER PUMP CONTROL and PRODUCT PUMP CONTROL switches function identically as described below.

HAND

In the hand position, the PUMP CONTROL switch overrides sensor input and applies power directly to the pump.

AUTO

In the AUTO position, ON/OFF switching of the pump is controlled by sensor input from the downwell probe.

OFF

In the OFF position, the pump will not run.

PUMP CONTROL Indicators

These indicators monitor the setting of the PUMP CONTROL switches and provide information on the status of each pump.

AUTO

The green AUTO indicator is illuminated whenever the PUMP CONTROL switch is in the AUTO position. If the PUMP CONTROL switch fails, its auto indicator will blink.

PUMP RUNNING

When the pump is running the indicator is steadily illuminated.

PROBE STATUS Indicators

These indicators allow the user to monitor the status of the downwell and tankful probes (Figure4-2, below). These indicators are not functional if either the CONTROL POWER switch or both PUMP CONTROL switches are in the OFF position. Indicator functions are described below.

PRODUCT TANKFUL

Functional only when optional jumper is installed (Figure 2-3, p. 2-7). When illuminated, the product recovery tank has become full. The product pump will be shut down by an interlock alarm on Channel 1. The water pump will continue running. After draining the product recovery tank, clear the alarm by turning the PRODUCT PUMP CONTROL switch to OFF and then back to AUTO.

WATER HIGH

The intake cartridge is at the top of its travel or (if the unlabeled MEDIUM indicator is also illuminated) is on its way down. When the intake cartridge reaches the WATER HIGH switch at the top of its travel, the water pump starts.

MEDIUM

This unlabeled indicator provides information on the direction the intake cartridge is moving. If both MEDIUM and WATER HIGH indicators are illuminated, the cartridge is moving down. If both the MEDIUM and WATER LOW indicators are illuminated, the cartridge is rising.

WATER LOW

The intake cartridge is either at the bottom of its travel or (if the unlabeled MEDIUM indicator is also illuminated) is on its way up. The water pump will shut off when the cartridge reached the WATER LOW switch at the bottom of its travel. The pump will not restart until the cartridge reached the WATER HIGH switch at the top of its travel.

WATER OVERRIDE

When steadily illuminated, the WATER OVERRIDE float has shut off the water pump. Reset the panel by turning the WATER PUMP CONTROL switch to OFF and then to AUTO.

PRODUCT HIGH

When indicator is steadily illuminated, the PRODUCT that floats inside the product reservoir is suspended in hydrocarbon. The product pump will run as long as no water is present in the product reservoir.

When indicator blinks three times, the WATER SENSOR has detected water inside the product reservoir. The product pump control circuit will be disabled.

To remove water from the product reservoir, ensure that the product float is located within the range of hydrocarbon and run the product pump briefly on HAND. Repeat this step until the lines have cleared of water.

SYSTEM PRECHECK PROCEDURES

Check Wiring

Before starting the system, carry out the following precheck procedures.

1. Refer to the wiring diagrams in Chapter 2 and check all wiring connections to the panel.

2. With the PUMP CONTROL switches in the OFF position, turn the PUMP POWER and CONTROL POWER switches ON.

Run Self-Test

3. Press the SYSTEM TEST button. All the panel indicators should be illuminated briefly as the microprocessor goes through its self-test routine.

If the SYSTEM FAULT indicator comes on after the SYSTEM TEST button has been pushed, the self-test routine has detected a fault in the panel electronics. Document the problem as instructed in Chapter 6, and call Geotech for assistance.

Check Pumps

4. Briefly turn each PUMP CONTROL switch to HAND. The pumps should start and the PUMP RUNNING indicators should be illuminated.

5. With the pumps assembly held in an upright position, turn both PUMP CONTROL switches to AUTO. Neither pump should run and the WATER LOW and WATER OVERRIDE indicators should be illuminated.

6. Restraining the intake cartridge at its bottom stop, carefully turn the entire pump assembly upside down. This should cause the Product float (inside product reservoir) to rise. The product pump should start and the PRODUCT HIGH and WATER LOW indicators should be illuminated.

7. With the pump assembly still upside down and the product pump running, allow the intake cartridge to rise to the WATER HIGH switch. The water pump should start. The PRODUCT HIGH and WATER HIGH indicators will both be illuminated. Shut off the water pump by moving the WATER OVERRIDE float to its bottom stop. The WATER OVERRIDE indicator will be illuminated.

Once precheck procedures have been completed, the ORS SITEPRO™ 2000 control panel is ready for operation.

SINGLE PANEL STARTUP

1. With the PUMP CONTROL switches in the OFF position, turn on the PUMP POWER and CONTROL POWER switches.

2. After the panel has gone through its self-test procedure, turn the WATER PUMP CONTROL switch to AUTO. The water pump should start.

The water pump should be purged if free hydrocarbon is present in the well. To do this, place the output hose in a suitable container and run the pump on HAND until the water runs clear. Dispose of hydrocarbon according to local codes.

3. With the water pump running on AUTO, reduce the rate cycling to a minimum by adjusting the pumping rate.

Refer to the specifications provided with your water pump and confirm that the volume of water passing through it is sufficient for adequate cooling.

4. Once a cone of depression has been established in the water table, turn the PRODUCT PUMP CONTROL switch to AUTO. The PRODUCT PUMP will cycle on and off as product alternately accumulates in the well and is drawn off by the pump.

NETWORK STARTUP

1. On each Slave panel in the ***network***, turn the PUMP CONTROL and POWER switches to OFF while turning the CONTROL POWER switch to ON. Each slave will then go through its own self-test routine and will begin blinking its MAIN POWER indicator.

2. Make the same switch settings on the Master panel. After going through its self test routine, the Master will begin blinking its MAIN POWER indicator. The Master will then:

   a. Check the number of Slaves on the ***network*** against the setting on its CONTROLLER ADDRESS switch. See chapter 3 for switch configuration procedures.

   b. Poll slaves at their pre-programmed ***network addresses*** until each is accounted for and connected to the ***network***. The slaves are polled in ascending numerical order as determined by their ***network addresses***.

As each Slave comes on the ***network***, its MAIN POWER indicator stops blinking and remains steadily illuminated. If a Slave cannot be located by the Master or suffers a fault that prevents it from coming on the ***network***, the Master's MAIN POWER indicator will continue blinking until the problem is eliminated and polling can be completed.

When all the slaves have been connected to the ***network***, the Master's MAIN POWER indicator will stop blinking and remain steadily illuminated. The network is now ready for operation.

5. Turn each panel's PUMP POWER switches to ON.

6. Turn each panel's WATER PUMP CONTROL switch to AUTO. The water pumps will start.

7. When cones of depression have been established, turn the PRODUCT PUMP CONTROL switches to AUTO. The product pumps will start.

ROUTINE OPERATION

During normal operation, the water pump will cycle on and off as the water level rises and falls in the well. At the same time, the product pump will run as long as sufficient hydrocarbon is present in the well.

Water Override

The water pump will go into OVERRIDE if the intake cartridge fails to shut off the pump when it reaches its bottom stop. To clear the OVERRIDE condition, turn the WATER PUMP CONTROL switch to OFF and then back to AUTO.

Tankfull Alarm

If the optional jumper (Figure 2-3, p.2-7) has been installed, only the product pump will shut off when the product recovery tank becomes full. If the jumper is not installed, both pumps will shut off. Because the tankfull probe is wired as an ***interlock*** device, the panel must be reset to clear the ***alarm*** after the tank has been drained. To reset the panel, turn the PRODUCT PUMP CONTROL switch to OFF and then back to AUTO.

If difficulties are encountered during or after startup, refer to the troubleshooting procedures in Chapter 6 of this manual.

TRACING AND CLEARING ALARMS

Single Panel Applications

In the single panel applications, ***alarms*** can be generated only by ***interlock*** devices wired directly to the panel. In such cases, the ALARM ENGAGED indicator will be steadily illuminated. Proceed as follows to restore panel operation;

1. Correct the condition that caused the ***alarm.***

2. Clear the ***alarm*** by turning either PUMP CONTROL switch to OFF and then back to AUTO.

Network Applications

In the ***network*** applications, ***alarms*** can be generated by ***interlock*** devices wired to any panel in the ***network***. Depending upon the configuration of the panel's send/receive switches, any number of panels in the ***network*** can be shut down by a single ***alarm.*** Also because a panel shutdown can trigger site conditions that lead to additional ***alarms***, it may not be inmediately clear which interlock device initiated the shutdown "cascade". Proceed as follows to restore ***network*** operation;

1. Locate the one panel in the ***network*** whose ALARM ENGAGED indicator is blinking. This is the panel to which the alarming ***interlock*** device is attached. The ***interlock*** device can then be isolated by interpreting the channel code being blinked by the indicator.

In large multi-panel ***networks,*** some footwork can be eliminated by using the SYSTEM TEST button (pp.4-4 and 4-7) to isolate the ***alarm channel.*** Once the ***alarm channel*** has been isolated refer to your Network Configuration Sheet (p.A-4, Appendix A) to determine which ***interlock*** devices are attached to that channel.

2. Correct the condition that caused the ***alarm.***

3. Clear the ***alarm*** by turning either PUMP CONTROL switch to OFF and then back to AUTO.

If the ALARM ENGAGED indicator goes out when the control PUMP CONTROL switch is reset, then the ***network*** is free of interlocks. Normal operation can resume. However, if the indicator blinks an ***alarm channel*** code, additional ***alarms*** must be cleared. Repeat steps 1-3 above until all ***alarms*** have been cleared from the ***network***.

In ORS SITEPRO™ panels without the telemonitoring options all ***alarms*** are of the ***latching*** type and must be manually cleared as described in the section above. When the telemonitoring option is installed, alarms can be remotely configured to be either ***latching*** or non-latching. Not-latching ***alarms*** will automatically clear when the condition that caused the ***alarm*** is corrected. When the no-latching alarms clears, an automatic **"CLEAR INTERLOCKS"** command is issued to all panels in the ***network,*** clearing all other ***interlock alarms,*** latching or non latching types.

Chapter 5: SYSTEM MAINTENANCE

Chapter Summary

This chapter contains maintenance procedures for the following components:

- *ORS SITEPRO™ 2000 Enclosure*
- *Level Sensing Probe*

The ORS SITEPRO™ 2000 is designed for trouble free operation with minimal maintenance required. The following simple maintenance tasks should be carried out at the specified intervals.

Vacuum Enclosure

At yearly intervals, the insides of the enclosure should be vacuumed to remove accumulated dust.

Clean Window

As needed, clean the enclosure window using a solution of soap and warm water.

Glass cleaners containing ammonia will damage the enclosure's Lexan window. Also, prevent hydrocarbons from contacting the window.

Change Desiccant

If desiccant is being used to control moisture accumulation inside the enclosure, this material should be renewed on a monthly basis or at the intervals recommended by the desiccant manufacturer.

Geotech does not supply desiccant.

Clean Probes

It is essential that the probe shafts and floats be cleaned on a regular basis. Use Alconox detergent, warm water and a soft brush. The required frequency of cleaning is highly site specific and must be determined by the user.

Failure to clean the probe will result in fouling that could cause a system malfunction.

Chapter 6: PROBLEM SOLVING

Chapter Summary

This chapter contains the following troubleshooting information:

- *Getting Help - What to do before calling Geotech for assistance*
- *Service Location - How to contact Geotech Environmental Equipment, Inc.*
- *Troubleshooting Procedures - How to determine if your ORS SITEPRO™ 2000 is functioning properly, and what to do if a problem is detected.*

Do not attempt any troubleshooting procedures other than those listed in this chapter.

GETTING HELP

There are no field replaceable components inside the ORS SITEPRO™ enclosure. If the troubleshooting procedures in this chapter indicate a component failure, call Geotech Environmental Equipment, Inc. after documenting the problem as outlined below:

- Read the entire manual and become thoroughly familiar with all system components and troubleshooting procedures.
- Prepare a written list of all problems encountered while operating the equipment.
- Prepare an up to date copy of your Panel Configuration Sheet and have it available while conferring with Geotech personnel.

SERVICE LOCATION

Geotech Service personnel are trained on all aspects of ORS equipment and are dedicated to helping you maximize the efficiency and cost effectiveness of your SITEPRO™ 2000 Control Panel. For technical support of Geotech products, contact Geotech as below:

Geotech Environmental Equipment, Inc.
8035 East 40th Avenue
Denver, CO 80207
800-833-7958
OR: 303-320-4764
FAX: 303-322-7242

BASIC TROUBLESHOOTING PROCEDURES

The ORS SITEPRO™ 2000 is equipped as standard with online self-diagnostic features and can be ordered with optional telemonitoring capabilities.These features make the ORS SITEPRO™ 2000 significantly easier to troubleshoot than are conventional control panels. Whenever the ORS SITEPRO™ 2000 is in operation, its microprocessor "brain" monitors the function of all critical system components. When a nonoperational fault is detected, the user is alerted through a system of diagnostic messages communicated locally by one or more of the panel's indicator lights. When the telemonitoring package is installed and properly configured, the panel will dial out and relay diagnostic messages to a similarly configured computer, fax machine or other remote receiving device.

DIAGNOSTIC MESSAGES

In the sections below, all possible local diagnostic messages are listed and described. If your ORS SITEPRO™ 2000 is equipped with the telemonitoring option, refer to the ORS SITEPRO™ Manager software manual for remote monitoring protocol and procedures.

Before beginning troubleshooting procedures, press the SELF TEST button to confirm that all panel indicators are functional.

- **Diagnostic Message: Water Pump Control AUTO Indicator Blinking**

Cause: The WATER PUMP CONTROL switch is faulty.

Remedy: Call Geotech for assistance.

- **Diagnostic Message: Product Pump Control AUTO Indicator Blinking**

Cause: The PRODUCT PUMP CONTROL switch is faulty.

Remedy: Call Geotech for assistance.

- **Diagnostic Message: MAIN POWER Indicator Blinking (Network Applications Only)**

Cause: The panel is waiting to get on the bus or is no longer connected to the network.

Remedy: Check the network connections on TB4. If no loose connections are found, confirm that none of the other panels has fallen off the network.

- **Diagnostic Message: PRODUCT HIGH Indicator Blinks**

Cause: Water has entered the product reservoir.

Remedy: 1. Position the intake assembly within the range of the hydrocarbon in the well.

2. Purge the reservoir by running the product pump briefly on HAND.

- **Diagnostic Message: SYSTEM FAULT Indicator Blinks Once**

Cause: The panel has failed the Self Test routine.

Remedy: Call Geotech for assistance.

- **Diagnostic Message: SYSTEM FAULT Indicator Blinks Twice**

Cause: An Interlock Communication Bus failure has occurred. The panel will shut down.

Remedy: Call Geotech for assistance.

- **Diagnostic Message: SYSTEM FAULT Indicator Blinks Three Times**

Cause: Line voltage as deviated more than 20% from specified value.

Remedy: Check power at service and restore to specifications.

- **Diagnostic Message: SYSTEM FAULT Indicator Blinks Four Times**

Cause: The temperature inside the panel has risen over the specified maximum.

Remedy: Determine cause of problem and correct.

- **Diagnostic Message: SYSTEM FAULT Indicator Blinks Five Times**

Cause: The panel purge pressure has dropped below the specified minimum. The panel will shut down.

Remedy:

1. Check for loose or disconnected purge air hose.
2. Check function of purge air compressor.

- **Diagnostic Message: SYSTEM FAULT Indicator Blinks Six Times**

Cause: This diagnostic message indicates a probe fault caused by one of the following conditions.

1. The probe has become disconnected from the panel.

2. The probe has a stuck float or faulty reed switch.

Remedy:

1. Check all connections between the probe and the panel.

2. Clean the probe and free all floats on the shaft.

If the diagnostic message persists, call Geotech for assistance

- **Diagnostic Message: CALL IN PROGRESS Indicator Blinking (Telemonitoring Applications Only)**

Cause:

A communications fault has been detected

Remedy:

Clear the diagnostic message by turning the CONTROL POWER switch OFF, waiting 5 seconds, and then turning the switch to ON. If the diagnostic message persists, call Geotech for assistance.

ADDITIONAL TROUBLESHOOTING PROCEDURES

In addition to the diagnostic conditions described above, the following problems could cause an interruption in system operation.

- **Problem: PUMP POWER Switch Tripped OFF**

Cause:

A tripped circuit breaker could be caused by:

1. Breaker too small for motor.

2. Short in wiring between panel and motor.

3. Faulty motor drawing excessive current.

Remedy:

1. Refer to the trip amps specification printed on the side of the breaker. Confirm that the breaker is properly sized for the motor being used.

2. Use an Ohm Meter to check for shorts in the motor wiring.

3. Check the motor for damage.

Before working on either pump, carry out the DISCONNECT PROCEDURE printed on the front of the ORS SITEPRO™ 2000 faceplate.

- **Problem: No Panel Indicators Illuminated**

Cause:

Either a fuse is blown or no power is reaching the panel.

Remedy:

1. Use a voltmeter to check for power at the terminal block on the panel chassis.

2. If power is present, the problem is a blown fuse behind the circuit board shield. Call Geotech for assistance.

3. If no power is present at the terminal block, problem is a power failure at the service. Restore power and restart the system by repeating the panel startup procedure described in Chapter 4.

APPENDIX A: PANEL CONFIGURATION SHEET

This Appendix consists of a ORS SITEPRO™ 2000 Panel Configuration Sheet to be used to record the final configuration of your ORS SITEPRO™ panel.

During the panel configuration procedures described in Chapter 3 of this manual, you will be changing the settings of some of the dip switches shown in Figure 3-1 (p.3-3) Geotech recommends that you carefully record the final configuration of your ORS SITEPRO™ 2000 panel by penciling in the appropriate dip switch settings on the blank Panel Configuration Sheet provided in this Appendix. Once filled out, this sheet will be a permanent record of your configuration and can be used as a check against inadvertent or unauthorized configuration changes. Be sure to update this sheet whenever configuration changes are made. An up to date Panel Configuration Sheet is an essential troubleshooting tool and must be available for reference whenever you call Geotech for technical assistance.

Network Configuration

Before configuring any ORS SITEPRO™ panel that is part of a complex multi-panel ***network,*** basic decisions must be made about the design of the network as a whole. Although remediation site design is beyond the intended scope of this manual, a Site Configuration Guide has been included in your Quick Start Installation envelope. The Site Configuration Guide is designed to help you specify panel ***network addresses, interlock*** hookups and alarm ***interlock*** assignments for up to 16 ORS SITEPRO™ 2000 control panels. Fill out the blank Site Configuration Work sheet **BEFORE** configuring individual panels.

ORS SITEPRO™ 2000 CONFIGURATION SHEET

Date_____

Panel Type_____

Panel Network Address_____

CONTROLLER ADDRESS switch

SW4

MASTER ☐

SLAVE ☐

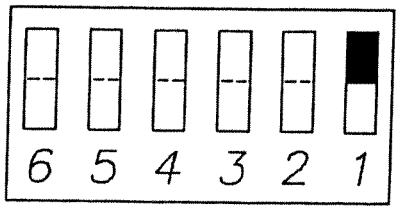

SPROA1.EPS

LOGIC Switch

SW5

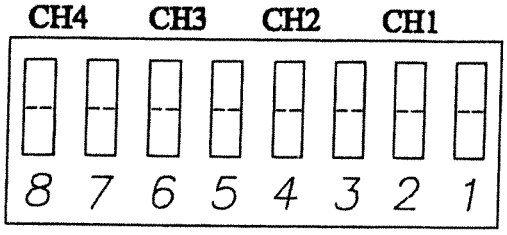

SPROA2.EPS

SEND/RECEIVE Switch

SW4

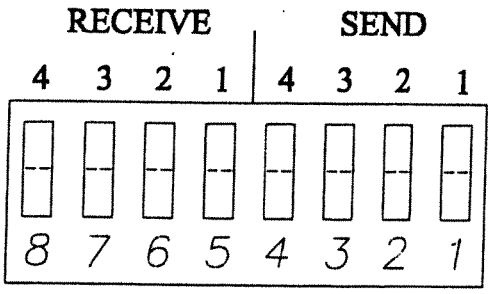

SPR057.EPS

APPENDIX B: GLOSSARY

Address

An identifying number assigned to each panel in a network. The master panel always receives the address "0". Slaves are numbered from "1" to a maximum value of "15". During network operation, the Master panel polls the Slaves in ascending numerical order.

Alarm

A shutoff signal generated by an interlock device wired to an ORS SITEPRO™ panel.

Alarm Channel

One of four circuits in the ORS SITEPRO™ that can carry an alarm signal. Alarms are carried from panel to panel on the Interlock Communication Bus.

A/D Converter

A device that converts analog signals to digital signals.

Analog Input

An input that accepts signals from pressure transducers or other analog devices. Analog signals are continuos functions and must be converted to discrete digital data before that can be manipulated by the microprocessor. This conversion is carried out by the ORS SITEPRO™'s analog to digital (A/D) converter.

Baud Rate

Rate of data transfer in bits/second. A measure of how fast information is transferred over a serial communications network.

Dry Contact

An electrical switch that is isolated from any source of electrical energy. In the diagram below, the dry contacts are acted upon by a relay coil that is isolated from the switch.

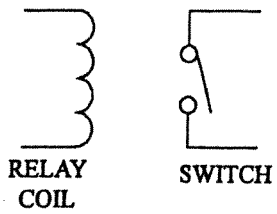

SPGL2.EPS

Form C Contacts

A set of electrical contacts that has both Normally Open and Normally Closed poles as shown in the diagram below. See definitions of Normally Open and Normally Closed also included in this Glossary.

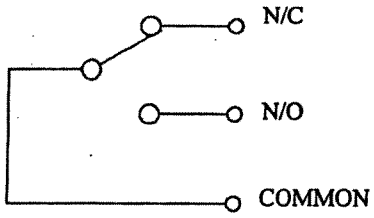

SPGL1.EPS

Interlock Communication Bus

An RS-485 network that allows the ORS SITEPRO™ to exchange information with other panels.

Interlock

A signal or alarm generated by a switching device attached to an ORS SITEPRO™ panel.

Intrinsically Safe

Incapable of carrying enough electrical current to cause an explosion.

IP 66

Enclosure intended for outdoor use primarily to provide a degree of protection against windblown dust and rain, splashing water, and hose-directed water; undamaged by the formation of ice on the enclosure. The international Electrotechnical Commission (IEC) equivalent to a rating of NEMA 4.

Latching

An alarm that, once engaged, requires a manual reset to clear. A non-latching alarm will clear automatically when the condition that caused the alarm either corrects itself spontaneously or is corrected by operator invention.

Microprocessor

A computer chip that is capable of executing programmed instructions; the ORS SITEPRO™'s "brain".

NEC

The NEC (National Electrical Code) is a collection of electrical safety standards compiled by the National Fire Protection Association.

NEMA 4

Enclosure intended for outdoor use primarily to provide a degree of protection against windblown dust and rain, splashing water, and hose-directed water; undamaged by the formation of ice on the enclosure. (See IP 66).

Network

A series of ORS SITEPRO™ panels connected by the Interlock Communication Bus.

Normally Closed

A Switch that is closed when not acted upon. See Figure 2-2 (p.2-6) for an example of a Normally Closed switch that is held open by a magnet embedded in a probe float. When the magnet is moved, the switch closes.

Normally open

A switch that is open when not acted upon.

RAM

RAM (Random Access Memory) is computer memory that can be both read and written to. RAM is used for temporary data storage.

ROM

ROM (Read Only Memory) is computer memory that can be read but not written to. ROM is used to store permanent programmed instructions.

RS-232

A serial communication network capable of transmitting over short distances only.

RS-485

A serial communications network capable of transmitting over long distances.

Totalizer

A device that counts electrical pulses generated by a flowmeter.

A

Alarm 4-13
Clearing 4-13
Function 4-13
Tracing 4-13
Alarm Engaged indicator
Function 4-4
Location 4-2
Analog inputs
Description 2-11
Wiring diagram 2-12
Auto indicator
Function 4-7
Location 4-2

C

Call in Progress indicator
Function 4-6
Location 4-2
Configuration
Configuration example 3-14
Configuration procedures . . .3-5
Configuration switches 3-2
Interlocks 3-7
Network Configuration Sheet 3-1
Panel Configuration Sheet . . .3-2
Top level flowchart 3-6
Control Power switch
Function 4-3
Location 4-2
Controller Address switch
Configuration example 3-14
Configure switch 3-11
Diagram 3-2
Flowchart 3-12
Function 3-2
Location 3-3
Controls
Control Power switch 4-3
Faceplate drawing 4-2
Function 4-1
Pump Power switch 4-7
Pump control switch 4-7
System test button 4-3

D

Dry contacts outputs
Capacity 1-6
Description 2-10
Wiring diagram 2-11
Diagnostic messages
Auto blinking 6-3
Call in progress blinking 6-6
Main power blinking 6-3
Probe Fault illuminator 6-5
System fault blinking 6-5

E

Electrical
Line voltage 1-5
Power consumption 1-5
Enclosure
Certification 1-7
Dimensions 1-3
Door clearance 1-5
Maintenance 5-1
Mounting diagram 1-4
Rating 1-5

G

Grounding
Chassis ground 2-2
I.S. ground 2-4
Location of grounding lug . . .2-3
Procedures 2-2

I

Indicators
Alarm engaged 4-4
Auto 4-7
Call in progress 4-6
Main power 4-4
Product high 4-10
Product tank full 4-9
Water low 4-9
Water high 4-9
Water override 4-10
System fault 4-7
Pump runing 4-7
Installation
Grounding 2-2
Mounting instructions 2-2
NEC codes 2-1
Warnings & Cautions 2-1
Wiring diagram 2-3
Interlock
Description 2-7
Function 1-11
N/O and N/C 3-9

Interlock Communication Bus
Capacity 1-7
Diagram 1-14
Function 1-11
Type 1-7

L

Local communications
Baud rate 1-7
RS-232 port 1-7
Logic switch
Configuration example 3-9
Configuration switch 3-9
Diagram 3-4
Flowchart 3-10
Function 3-4, 3-9
Location 3-3

M

Main power indicator
Function 4-4
Location 4-2
Maintenance
Change desiccant 5-1
Clean window 5-1
Probe 5-2
Vacuum enclosure 5-1
Master Panel
Configure 3-13
Description 1-14
Modem
Type 1-5
Wiring 2-12

N

Networks
Configuration example 3-17

Configuring 3-11
Description 1-12
Management 1-14
Maximum size 2-9
Startup 4-13
Wiring diagram 2-9

O

Operation
Basic motor control 1-10
Panel controls 4-1
Precheck procedures 4-10
Pump functions 4-6
Routine 4-14
RS-232-port 1-7
Startup 4-12
Use of interlocks 1-11
Options
Auto dial-out 1-3
Data logging 1-3
Description 1-3
Large pumps 1-3
Modem 1-5
ORS SITEPRO™ Manager . .1-3
Software 1-3
Telemonitoring 1-3
Outputs
Dry contact 1-6
Motor 1-7
Peripheral equipment 1-6

Override indicator
Check function 4-9
Function 4-10
Location 4-2

P

Power
Consumption 1-5
Requirements 1-5
Wiring 2-4
Probe (downwell)
Function 4-8
Maintenance 5-2
Precheck 4-10
Wiring 2-6
Probe (tankful)
Function 4-8
Maintenance 5-2
Wiring 2-7
Pump (water)
Adjust cycling rate 4-12
Cooling 4-12
Deployment 2-5
Precheck 4-11
Pump manual i
Purge procedure 4-12
Sizes supported 1-7
Wiring 2-5
Pump (product)
Deployment 2-5
Precheck 4-11
Pump manual i
Sizes supported 1-7
Wiring 2-5

Pump Power switch
Function 4-6
Location 4-2

Pump control switch
Function 4-7
Location 4-2

R

RAM test
Description 4-3
Receive switch
Configuration example 3-7
Configure switch 3-7
Diagram 3-4
Flowchar t3-8
Function 3-5, 9
Location 3-3
Remote monitoring
Description 1-3
ROM test
Description 4-3

S

Send switch
Configure switch 3-15
Diagram 3-4
Flowchart 3-16
Function 3-4
Location 3-3
Sensor inputs
Optiona l1-6
Standard 1-6
Service
Field Service office 6-2

Slave panel
Configure 3-13
Description 1-14
Startup
Networks 4-13
Single pane l4-12
System fault indicator
Function 4-6
Location 4-2
System test button
Function 4-3
Location 4-2
System test functions
A/D Converter test 4-4
RAM test 4-3
ROM test 4-3

T

Telemonitoring
Description 1-3
Temperature
Operating 1-5
Storage 1-5
Totalizer input
Description 1-6
Troubleshooting
Diagnostic messages 6-3
Procedures 6-1
Service locations 6-2

U

User interface
Description 1-7, 9
Local communications 1-9
Manual operation 1-9
Remote communications 1-9

W

Wiring
Access ports 2-4
Chassis ground 2-2
Interlocks 2-7
Intrinsically safe ground 2-4
Network connections 2-9
Power 2-4
Probe (downwell) 2-5
Probe (tankful) 2-6
Procedures 2-2
Pumps 2-5
Wiring diagram 2-3

APPENDIX D: APPLICATION NOTES

The ORS SITEPRO™ 2000 Blower/Pump Control Panel is highly flexible and can be adapted for many different site remediation functions. The examples in this appendix explain how to wire and configure your ORS SITEPRO™ panel for the most commonly encountered field applications.

APPLICATION # 1 ORS SITEPRO™ Blower/Pump Control Panel controlling air stripper blower and transfer pump. High sump level or high/low Pressure condition must shut down feed pump controlled by separate ORS SITEPRO™ WTDP panel.

In order to shut down the WTDP panel in the event of a High Sump Level or High/Low Pressure alarm received by the Blower/Pump panel, the High Sump Level, High Pressure and Low Pressure inputs must each be jumpered to an alarm channel in the Blower/Pump panel. Both panels must then be configured to communicate through the Interlock Communication Bus. Proceed as follows:

Wiring

1. Wire the sump level probe and pressure switches to the ORS SITEPRO™ Blower/Pump control panel as shown in Figure 2-3 (p.2-8).

2. Install a wire jumper between terminal 5 on TB2 (High Sump Level) and one of the interlock terminals (1-4) also on TB2.

3. Install a wire jumper between terminal 6 on TB2 (High Pressure) and one of the other interlock terminals on TB2.

4. Install a wire jumper between terminal 7 on TB2 (Low Pressure) and one of the interlock terminals on TB2.

Refer to Figure 2-3 or to the Field Wiring Diagrams for locations of jumpers.

Configure Blower/Pump panel

1. Set the RECEIVE switches for the interlock channels to which jumpers were attached above. For example, if the High Sump Level input was jumpered to terminal 4 (interlock 4) on TB2, set RECEIVE dip switch 8 to ON.

2. Set the SEND switches for the Interlock communication Bus channels on which the High Sump Level and High Pressure alarms will be sent to the WTDP panel. Any of the four ICB channels can be used for this purpose.

3. configure the CONTROLLER ADDRESS Switch and LOGIC switch as explained in Chapter 3.

Configure WTDP Panel

1. Set the RECEIVE switches to correspond to the SEND switch settings chosen for Panel #1. For example, if the Blower/Pump panel SEND switches 1,2 and 3 were set ON, set the WTDP panel RECEIVE switches 5,6 and 7 to ON.

2. Configure the CONTROLLER ADDRESS switch and LOGIC switch as explained in Chapter 3.

APPLICATION # 2

ORS SITEPRO™ Blower/Pump control panel controlling air stripper blower and feed pump. The feed pump must be shut down in the event of a High Sump level or High/Low Pressure Condition at the air stripper.

Wiring

1. Wire the downwell WTDP probe and pressure switches into the ORS SITEPRO™ Blower/Pump Control Panel as shown in Figure 2-2.

2. Jumper the High and Low Pressure inputs to interlocks as explained in Application #1 Above.

3. Run the High Sump Level leads (green and orange) from the air stripper sump level probe to the ORS SITEPRO™ Blower/Pump Control Panel and wire the High Sump Level switch as an interlock. Refer to Chapter 3 for a discussion of interlock wiring.

Configure Panel

1. Set RECEIVE switches for the interlock channels to which the High and Low Pressure Jumpers were attached.

2. Set the RECEIVE switch for the interlock channels to which the High Sump Level switch was attached.

3. Configure the CONTROLLER ADDRESS and LOGIC switches as explained in Chapter 3.

Standard Equipment Limited Warranty

All references to the Customer herein shall mean the Customer or the Lessee as applicable.

(a) Geotech warrants that any ORS remediation equipment which it manufactures will be free from substantial defects in material and workmanship for a period of (1) year from the date such goods are delivered to a carrier by Geotech for shipment to the Customer.

(b) Geotech warrants that any Equipment which it repairs after the original warranty expires will be free from substantial defects in material and workmanship for a period of (90) days from the date such goods are delivered to a carrier by Geotech for shipment to the Customer.

(c) The Customer agrees that the liability of Geotech hereunder shall be limited to replacing, repairing or issuing credit for, at Geotech's discretion, any Equipment which is returned F.O.B. Geotech's plant within the applicable term of the warranty, provided that (I) upon examination of the Equipment Geotech determines that the alleged defect constitutes a substantial defect, and (ii) the warranty made herein is not invalid pursuant to the Section (e) hereof . The Customer agrees that such replacement, repair or credit shall be its sole and exclusive remedies hereunder. For purposes hereof, a substantial defect shall mean any defect which prevents the Equipment from operating in accordance with Geotech's published specifications. In the event that Geotech determines that Equipment which is no longer manufactured by it contains a substantial defect and the warranty covering the defective equipment is not invalid pursuant to Section (e) hereof, the Purchaser's sole and exclusive remedy hereunder shall be the repair of such Equipment or the replacement of such Equipment with new equipment at Geotech's discretion. In no case is Equipment to be returned by the Customer without first submitting a warranty claim in writing to Geotech and obtaining a return authorization number from Geotech. Equipment which is repaired or replaced pursuant to this warranty shall continue to be warranted for the unexpired portion of the warranty term applicable to the Equipment so repaired or replaced. Geotech shall make the final determination as to the existence or cause of any alleged defect.

(d) The foregoing warranty shall not be valid (I) if the alleged defect is the result of abuse, misuse, accident, alteration, neglect or unauthorized repair; (ii) if Geotech requires installation of Equipment by specifically approved Geotech employee and such installation is not effected, or the Equipment is otherwise installed improperly; or (iii) if the Equipment is resold by the Customer any repair shall be deemed unauthorized unless it is made (i) by Geotech or a duly authorized agent of Geotech or (ii) with the written consent of Geotech.

(e) The operating efficiency of treatment, abatement and recovery Equipment and systems is affected by factors extrinsic to their manufacture, including operating environment and such conditions of use as contaminant and related substance build-up, the frequency and type of operator maintenance and other external variables. For these reasons, specific levels of performance cannot be guaranteed for such Equipment and systems.

(f) THIS WARRANTY IS THE SOLE WARRANTY MADE BY GEOTECH TO THE CUSTOMER AND IS IN LIEU OF ALL OTHER WARRANTIES OR OBLIGATIONS, EXPRESS OR IMPLIED. GEOTECH EXPRESSLY DISCLAIMS ALL IMPLIED WARRANTIES OR MERCHANTABILITY OR FITNESS FOR PARTICULAR PURPOSE.

(g) THE CUSTOMER AGREES THAT IN NO EVENT SHALL GEOTECH BE LIABLE FOR SPECIAL INCIDENTAL, INDIRECT, EXEMPLARY OR CONSEQUENTIAL DAMAGES, INCLUDING BUT NOT LIMITED TO LOSS OF PROFITS OR LOSS OF USE OR ANY OTHER ECONOMIC LOSS, WHETHER BASED ON CONTRACT, TORT OR ANY OTHER LEGAL THEORY.

(h) THE REMEDIES PROVIDED HEREIN ARE CUSTOMERS SOLE AND EXCLUSIVE REMEDIES.

GEOTECH RETURN POLICY FOR ORS EQUIPMENT

Permission is required to return equipment to the Geotech Environmental Equipment Inc., facility in Denver, Colorado. A Return Authorization Number will be issued upon receipt of your request to return, which should include reasons for the return. Your return shipment to us must have this R.A. # clearly marked on the outside of package.

Proof of date of purchase is required for processing of all warranty requests.

This policy applies to both equipment sales and repair orders.

FOR A RETURN AUTHORIZATION, PLEASE CALL OUR SERVICE DEPARTMENT AT 800-833-7958 OR (303)320-4764

Equipment Decontamination

Prior to return, all equipment must be thoroughly cleaned and decontaminated. During decontamination, personnel should wear protective clothing and observe the cautions outlined below.

Geotech reserves the right to refuse any equipment not properly decontaminated. Geotech may also choose to decontaminate equipment at a fee which will be applied to the repair invoice.

Decontamination Solutions

The determination of what decontamination solution to use should be based on the types of contaminants present and the materials to be decontaminated. The fabrics of protective clothing are made of organic polymers which may be dissolved or destroyed by organic solvents. The metals and gaskets of tools may be damaged by overly acidic or basic compounds. Some decontamination solvents should be entirely avoided. The toxicity or physical hazards associated with using some once commonly used decontamination solutions can be as potentially dangerous as the site contaminants.

It is important to be certain that the decon solution, the contaminant, and the material to be cleaned are all compatible with each other. If they are not, it's possible to produce toxic or flammable gases, heat, splattering, bubbling, fire or explosion. If an uncommonly used method and/or chemical solution is being considered for decontamination, it is important to consult with an experienced chemist to ensure chemical compatibility.

Some common decontamination solutions are listed below along with the contaminants they are effective against:

Solution	Effective Against
Water	Short-chain hydrocarbons, inorganic compounds, salts, some organic acids, other polar compounds.
Dilute Acids	Basic (caustic or alkaline) compounds, amines, hydrazines.
Dilute Bases	Acidic compounds, phenols thiols, some nitro- and sulfonic compounds.
Organic solvents	Nonpolar compounds (such as some organic compounds)

The use of organic solvents is not recommended because 1) organic solvents can permeate and/or degrade the protective clothing and 2) they are generally toxic and may result in unnecessary employee exposure to hazardous chemicals.

When in doubt, use a dish washing liquid detergent. As a decontamination solution, it is readily available, is the safest of all the above, and is usually strong enough if used generously.

The use of steam can also be effective for decontamination. A water-lazer (pressurized water) is exceptionally valuable.

The following substances are noted for their particular efficiency in removing certain contaminants or for decontaminating certain types of equipment.

Solution	Effective Against
Penetone	PCB Contamination (since penetone may also remove paint, it is a good idea to spot-test before use)
Liquinox	Contaminated pumps
Ivory liquid	Oils
Diluted HTH	Cyanides
Radiac	Low level radioactivity
Isopropanol	Biological agents (should not be used on rubber products since it will break down rubber)
Hexane	Certain types of lab or sampling equipment (use of hexane is discouraged due to its flammability and toxicity)
Zep	General purpose cleaning
Alconox	General purpose cleaning

Decontamination Solutions to Avoid

Some decontamination solutions should be avoided because of their toxicity, flammability, or harmful effects to the environment.

Organic decontamination solutions should not be used on personal protective equipment (PPE) because they may degrade the rubber or other materials comprising the PPE.

Mercurials are sometimes used for sterilization. They should be avoided because of their toxicity.

Chemical leaching, polymerization, and halogen stripping should all be avoided because of possible complications during decontamination.

Sand-blasting, a method of physical removal, should be avoided because the sand used on the contaminated object usually needs to be disposed of as hazardous waste, a very costly proposition. Also, sand-blasting exposes personnel to silica, a carcinogen.

Freon is known to be particularly effective for the cleansing of PCB's but its effect on the ozone layer is extremely harmful. Its use is discouraged.

Strong acids or bases should not be used when cleaning metals and gaskets or tools or other equipment because of the possibility of corrosion.

Disposal of Decontamination Solutions and Waste Water

All solutions and water used for decontamination must be collected. If lab analysis indicate that the water and/or solutions exceed allowable contamination levels, they must be treated as hazardous waste. Alternatively, the solutions and water may be treated on-site to lower the contamination levels and render them nonhazardous.

Containers such as 55-gallon drums should be available for storage of wastes.

Spent decontamination solutions can be collected by using heavy-duty plastic sheets, visqueen sheets, kiddie pools, or if needed, a larger containment basin. The decontamination of equipment must be performed on the sheets or in the basins. They could be placed on a slight angle so that the spent decontamination solutions drain into a collection basin or drum.

Recommended Supplies for Decontamination of Personnel, Clothing and Equipment

The list below contains recommendations for supplies which would be on hand for the decontamination of personnel, clothing and equipment. Depending on the site activities, not all of these items may be needed. Alternatively, some additional items not listed here may be required.

- Drop cloths of plastic or other suitable material, such as visqueen, for heavily contaminated equipment.
- Disposal collection containers, such as drums or suitably lined trash cans for disposable clothing and heavily contaminated personal protective clothing or equipment to be discarded.
- Lined box with adsorbents for wiping or rinsing off gross contaminants and liquid contaminants.
- Wash tubs of sufficient size to enable workers to place booted foot in and wash off contaminants (without a drain or with a drain connected to a collection tank or appropriate treatment system).
- Wash solutions selected to wash off and reduce the hazards associated with the contaminated wash and rinse solutions.
- Rinse solution (usually water) to remove contaminants and contaminated wash solutions
- Long-handled, soft-bristled brushes to help wash and rinse off contaminants.
- Lockers and cabinets for storage of decontaminated clothing and equipment.
- Storage containers for contaminated wash and rinse solutions.
- Plastic sheeting, sealed pads with drains, or other appropriate method for containing and collecting contaminated wash and rinse water spilled during decontamination.
- Shower facilities for full body wash or at a minimum, personal wash sinks (with drains connected to collection tank or appropriate treatment system).
- Soap or wash solution, wash cloths and towels.
- Clean clothing and personal item storage lockers and/or closets.

APPENDIX E
Custom Control Panel: Wiring Diagrams, Parts List, and Vendor Documents

APPENDIX E1

Custom Control Panel Wiring Diagrams and Parts List

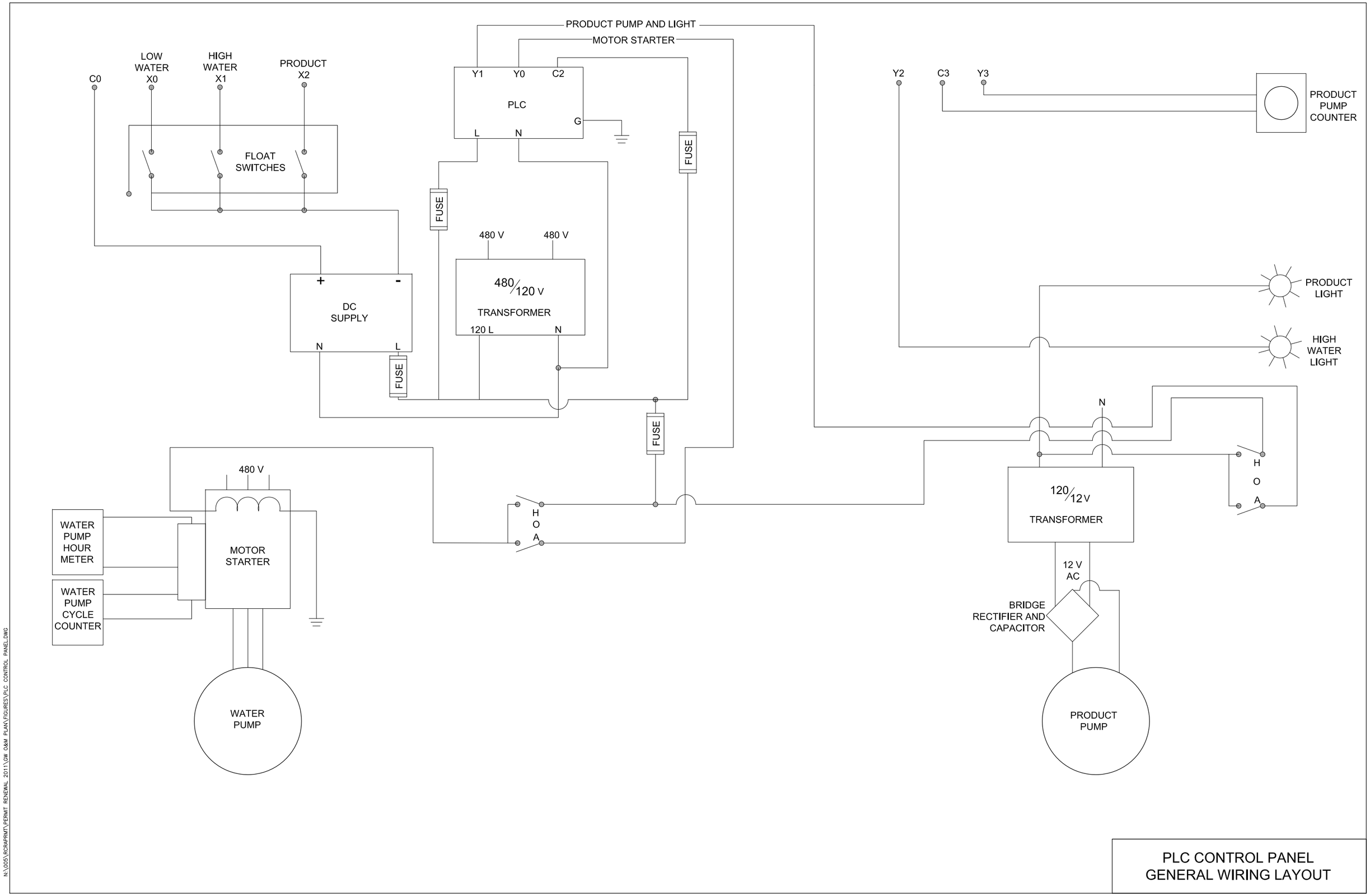

PLC CONTROL PANEL
GENERAL WIRING LAYOUT

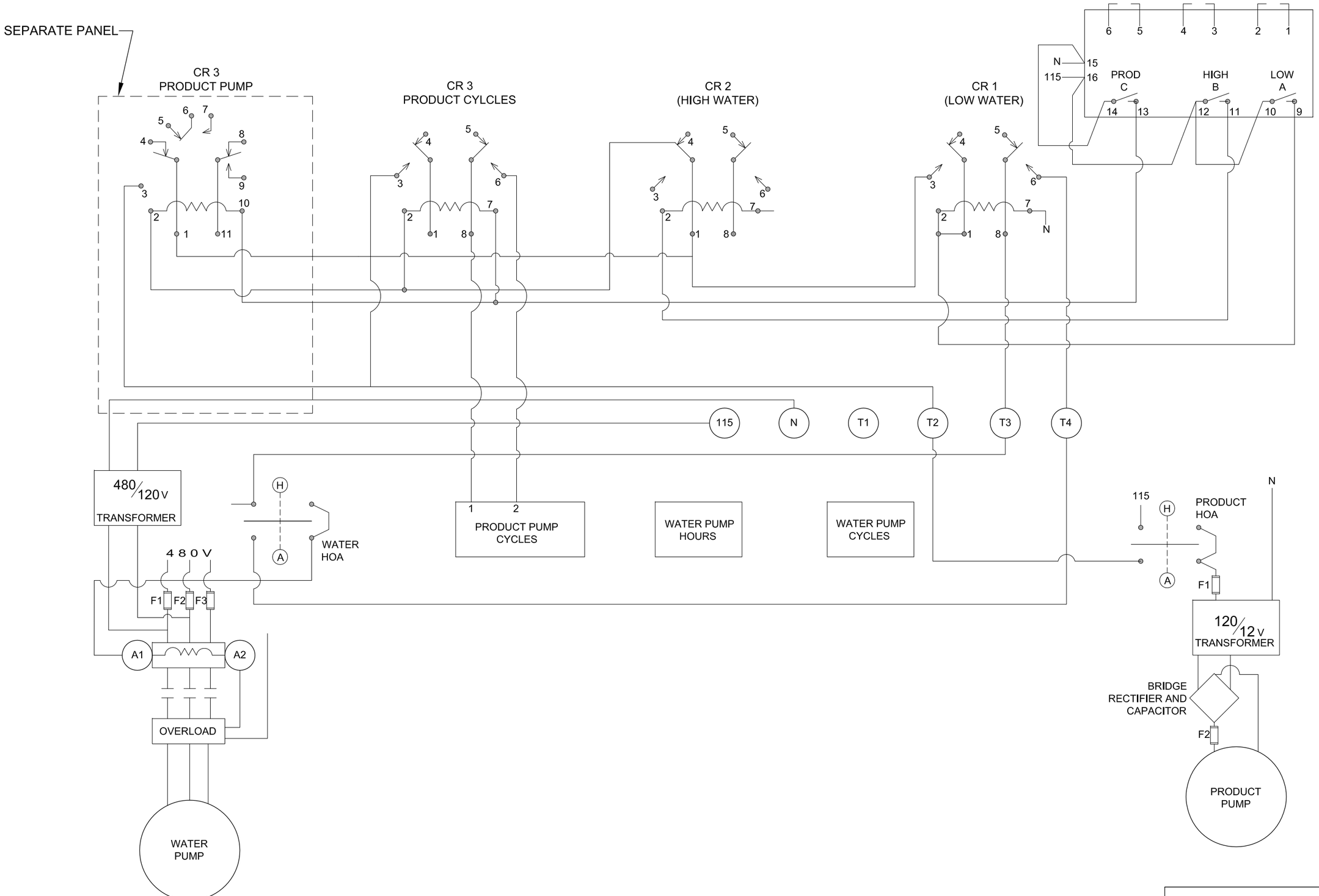

NON PLC CONTROL PANEL
GENERAL WIRING LAYOUT

N:\005\RCRAPRMT\PERMIT RENEWAL 2011\GW O&M PLAN\FIGURES\NON PLC CONTROL PANEL.DWG

PARTS LIST & VENDOR INFORMATION

COMPONENT	MANUFACTURER	PART NUMBER
Programmable Logic Controller	DirectLOGIC	DO-05DR
Heater Packs (18.7-30.7 Amp)	Cutler Hammer	H2013
Pump Panel - Size 2	Cutler Hammer	ECN5422 CAE
Motor Starter - Water Pump	Cutler Hammer	AN16GNO
Overload Protection - Water Pump	Cutler Hammer	FH47
Transformer 120/12 V - Product Pump	Acme Electric	TB-81325
Transformer 500 VAC	Acme Electric	TB-83218
Primary Transformer Fuses	Littlefuse	FLSR 30ID
DC Power Supply	PowerLine	0900-77
Hour Meter - Water Pump	Omron	H7ET
Relay	Omron	MK2EP-UA-AC120
Cycles Counter - Water & Product	Durant-Eaton	53300400

APPENDIX E2
(on CD-ROM)
Custom Control Panel
Vendor Documents

Programmable Logic Controller (PLC) - DO-05DR

AUTOMATIONDIRECT.com

DL05 Micro PLC User Manual

Volume 1 of 2

Manual Number: D0-USER-M

Notes

WARNING

Thank you for purchasing automation equipment from **Automationdirect.com®**, doing business as **AutomationDirect**. We want your new automation equipment to operate safely. Anyone who installs or uses this equipment should read this publication (and any other relevant publications) before installing or operating the equipment.

To minimize the risk of potential safety problems, you should follow all applicable local and national codes that regulate the installation and operation of your equipment. These codes vary from area to area and usually change with time. It is your responsibility to determine which codes should be followed, and to verify that the equipment, installation, and operation is in compliance with the latest revision of these codes.

At a minimum, you should follow all applicable sections of the National Fire Code, National Electrical Code, and the codes of the National Electrical Manufacturer's Association (NEMA). There may be local regulatory or government offices that can also help determine which codes and standards are necessary for safe installation and operation.

Equipment damage or serious injury to personnel can result from the failure to follow all applicable codes and standards. We do not guarantee the products described in this publication are suitable for your particular application, nor do we assume any responsibility for your product design, installation, or operation.

Our products are not fault-tolerant and are not designed, manufactured or intended for use or resale as on-line control equipment in hazardous environments requiring fail-safe performance, such as in the operation of nuclear facilities, aircraft navigation or communication systems, air traffic control, direct life support machines, or weapons systems, in which the failure of the product could lead directly to death, personal injury, or severe physical or environmental damage ("High Risk Activities"). **AutomationDirect** specifically disclaims any expressed or implied warranty of fitness for High Risk Activities.

For additional warranty and safety information, see the Terms and Conditions section of our catalog. If you have any questions concerning the installation or operation of this equipment, or if you need additional information, please call us at 770-844-4200.

This publication is based on information that was available at the time it was printed. At **AutomationDirect** we constantly strive to improve our products and services, so we reserve the right to make changes to the products and/or publications at any time without notice and without any obligation. This publication may also discuss features that may not be available in certain revisions of the product.

Trademarks

This publication may contain references to products produced and/or offered by other companies. The product and company names may be trademarked and are the sole property of their respective owners. **AutomationDirect** disclaims any proprietary interest in the marks and names of others.

Copyright 2010, Automationdirect.com Incorporated
All Rights Reserved

No part of this manual shall be copied, reproduced, or transmitted in any way without the prior, written consent of **Automationdirect.com** Incorporated. **AutomationDirect** retains the exclusive rights to all information included in this document.

AVERTISSEMENT

Nous vous remercions d'avoir acheté l'équipement d'automatisation de **Automationdirect.com**MC., en faisant des affaires comme, **AutomationDirect**. Nous tenons à ce que votre nouvel équipement d'automatisation fonctionne en toute sécurité. Toute personne qui installe ou utilise cet équipement doit lire la présente publication (et toutes les autres publications pertinentes) avant de l'installer ou de l'utiliser.

Afin de réduire au minimum le risque d'éventuels problèmes de sécurité, vous devez respecter tous les codes locaux et nationaux applicables régissant l'installation et le fonctionnement de votre équipement. Ces codes diffèrent d'une région à l'autre et, habituellement, évoluent au fil du temps. Il vous incombe de déterminer les codes à respecter et de vous assurer que l'équipement, l'installation et le fonctionnement sont conformes aux exigences de la version la plus récente de ces codes.

Vous devez, à tout le moins, respecter toutes les sections applicables du Code national de prévention des incendies, du Code national de l'électricité et des codes de la National Electrical Manufacturer's Association (NEMA). Des organismes de réglementation ou des services gouvernementaux locaux peuvent également vous aider à déterminer les codes ainsi que les normes à respecter pour assurer une installation et un fonctionnement sûrs.

L'omission de respecter la totalité des codes et des normes applicables peut entraîner des dommages à l'équipement ou causer de graves blessures au personnel. Nous ne garantissons pas que les produits décrits dans cette publication conviennent à votre application particulière et nous n'assumons aucune responsabilité à l'égard de la conception, de l'installation ou du fonctionnement de votre produit.

Nos produits ne sont pas insensibles aux défaillances et ne sont ni conçus ni fabriqués pour l'utilisation ou la revente en tant qu'équipement de commande en ligne dans des environnements dangereux nécessitant une sécurité absolue, par exemple, l'exploitation d'installations nucléaires, les systèmes de navigation aérienne ou de communication, le contrôle de la circulation aérienne, les équipements de survie ou les systèmes d'armes, pour lesquels la défaillance du produit peut provoquer la mort, des blessures corporelles ou de graves dommages matériels ou environnementaux («activités à risque élevé»). La société **AutomationDirect** nie toute garantie expresse ou implicite d'aptitude à l'emploi en ce qui a trait aux activités à risque élevé.

Pour des renseignements additionnels touchant la garantie et la sécurité, veuillez consulter la section Modalités et conditions de notre documentation. Si vous avez des questions au sujet de l'installation ou du fonctionnement de cet équipement, ou encore si vous avez besoin de renseignements supplémentaires, n'hésitez pas à nous téléphoner au 770-844-4200.

Cette publication s'appuie sur l'information qui était disponible au moment de l'impression. À la société **AutomationDirect**, nous nous efforçons constamment d'améliorer nos produits et services. C'est pourquoi nous nous réservons le droit d'apporter des modifications aux produits ou aux publications en tout temps, sans préavis ni quelque obligation que ce soit. La présente publication peut aussi porter sur des caractéristiques susceptibles de ne pas être offertes dans certaines versions révisées du produit.

Marques de commerce

La présente publication peut contenir des références à des produits fabriqués ou offerts par d'autres entreprises. Les désignations des produits et des entreprises peuvent être des marques de commerce et appartiennent exclusivement à leurs propriétaires respectifs. **AutomationDirect** nie tout intérêt dans les autres marques et désignations.

Copyright 2010, Automationdirect.com Incorporated
Tous droits réservés

Nulle partie de ce manuel ne doit être copiée, reproduite ou transmise de quelque façon que ce soit sans le consentement préalable écrit de la société **Automationdirect.com** Incorporated. **AutomationDirect** conserve les droits exclusifs à l'égard de tous les renseignements contenus dans le présent document.

DL05 Micro PLC USER MANUAL

AUTOMATIONDIRECT.com

Please include the Manual Number and the Manual Issue, both shown below, when communicating with Technical Support regarding this publication.

Manual Number: D0-USER-M
Issue: Sixth Edition, Rev. A
Issue Date: 4/10

Publication History		
Issue	**Date**	**Description of Changes**
Original	12/98	Original issue
2nd Edition	2/00	added PID chapter,analog module chapter and memory cartridge chapter
2nd Edition, Rev. A	7/00	added DC power
3rd Edition	11/01	removed MC and analog module chapters, corrected drum instruction, several minor corrections, added PLC weights, EU directive additions
3rd Edition, Rev. A	7/02	Added new discrete option modules
4th Edition	11/02	Converted manual to QuarkXPress
5th Edition	6/04	Removed option module data, added MC chapter, updated instruction set, inserted memory appendix, made minor corrections
6th Edition	12/08	Corrected E-stop, updated instruction set, added *Direct*SOFT 5 IBox instructions to Chapter 5, revised PID chapter, moved HSIO chapter to Appendices, divided Chapter 4 into Chapters 3 & 4, added Numbering Systems to Appendix section, made corrections throughout manual
6th Edition, Rev. A	4/10	Made minor corrections throughout manual.

Notes

VOLUME ONE:

TABLE OF CONTENTS

Chapter 1: Getting Started

Introduction **1–2**
The Purpose of this Manual 1–2
Where to Begin 1–2
Supplemental Manuals 1–2
Technical Support 1–2

Conventions Used **1–3**
Key Topics for Each Chapter 1–3

DL05 Micro PLC Components **1–4**
The DL05 Micro PLC Family 1–4
*Direct*SOFT 5 Programming for Windows™ 1–4
Handheld Programmer 1–5

I/O Selection Quick Chart **1–5**

Quick Start for PLC Checkout and Programming **1–6**

Steps to Designing a Successful System **1–10**

Questions and Answers about DL05 Micro PLCs **1–12**

Chapter 2: Installation, Wiring, and Specifications

Safety Guidelines **2–2**
Plan for Safety 2–2
Three Levels of Protection 2–3
Emergency Stops 2–3
Emergency Power Disconnect 2–4
Orderly System Shutdown 2–4
Class 1, Division 2 Approval 2–4

Orientation to DL05 Front Panel **2–5**
Connector Removal 2–6

Mounting Guidelines **2–7**
Unit Dimensions 2–7
Enclosures 2–7
Panel Layout & Clearances 2–8
Using DIN Rail Mounting Rails 2–9
Environmental Specifications 2–10
Agency Approvals 2–10
Marine Use 2–10

Wiring Guidelines **2–11**
Fuse Protection for Input Power 2–11
External Power Source 2–12
Planning the Wiring Routes 2–12
Fuse Protection for Input and Output Circuits 2–13
I/O Point Numbering 2–13

System Wiring Strategies **2–14**
PLC Isolation Boundaries 2–14
Connecting Operator Interface Devices 2–15
Connecting Programming Devices 2–15
Sinking/Sourcing Concepts 2–16
I/O "Common" Terminal Concepts 2–17
Connecting DC I/O to Solid State Field Devices 2–18
Solid State Input Sensors 2–18
Solid State Output Loads 2–18
Relay Output Wiring Methods 2–20
Surge Suppression For Inductive Loads 2–21
Prolonging Relay Contact Life 2–22
DC Input Wiring Methods 2–24
DC Output Wiring Methods 2–25
High Speed I/O Wiring Methods 2–26

Wiring Diagrams and Specifications **2–28**
D0–05AR I/O Wiring Diagram 2–28
D0–05DR I/O Wiring Diagram 2–30
D0–05AD I/O Wiring Diagram 2–32
D0–05DD I/O Wiring Diagram 2–34
D0–05AA I/O Wiring Diagram 2–36

D0–05DA I/O Wiring Diagram 2–38
D0–05DR-D I/O Wiring Diagram 2–40
D0–05DD–D I/O Wiring Diagram 2–42
Glossary of Specification Terms 2–44

Chapter 3: CPU Specifications and Operation

Introduction 3–2
DL05 CPU Features 3–2
CPU Specifications 3–3
CPU Hardware Setup 3–4
Communication Port Pinout Diagrams 3–4
Connecting the Programming Devices 3–5
CPU Setup Information 3–5
Status Indicators 3–6
Mode Switch Functions 3–6
Changing Modes in the DL05 PLC 3–7
Mode of Operation at Power-up 3–7
Auxiliary Functions 3–8
Clearing an Existing Program 3–8
Initializing System Memory 3–8
Setting Retentive Memory Ranges 3–9
Using a Password 3–10
CPU Operation 3–11
CPU Operating System 3–11
Program Mode 3–12
Run Mode 3–12
Read Inputs 3–13
Service Peripherals and Force I/O 3–13
Update Special Relays and Special Registers 3–14
Solve Application Program 3–14
Write Outputs 3–15
Diagnostics 3–15
I/O Response Time 3–15
Is Timing Important for Your Application? 3–15
Normal Minimum I/O Response 3–15

Normal Maximum I/O Response 3–16
Improving Response Time 3–17
CPU Scan Time Considerations 3–18
Reading Inputs 3–18
Writing Outputs 3–18
Application Program Execution 3–19
PLC Numbering Systems 3–20
PLC Resources 3–20
V–memory 3–21
Binary-Coded Decimal Numbers 3–21
Hexadecimal Numbers 3–21
Memory Map 3–22
Octal Numbering System 3–22
Discrete and Word Locations 3–22
V-memory Locations for Discrete Memory Areas 3–22
Input Points (X Data Type) 3–23
Output Points (Y Data Type) 3–23
Control Relays (C Data Type) 3–23
Timers and Timer Status Bits (T Data Type) 3–23
Timer Current Values (V Data Type) 3–24
Counters and Counter Status Bits (CT Data type) 3–24
Counter Current Values (V Data Type) 3–24
Word Memory (V Data Type) 3–25
Stages (S Data type) 3–25
Special Relays (SP Data Type) 3–25
DL05 System V-memory 3–26
System Parameters and Default Data Locations (V Data Type) 3–26
DL05 Memory Map Table 3–28
DL05 Aliases 3–29
X Input Bit Map 3–30
Y Output Bit Map 3–30
Control Relay Bit Map 3–31
Stage Control/Status Bit Map 3–32
Timer Status Bit Map 3–32
Counter Status Bit Map 3–33

Chapter 4: Configuration and Connections

DL05 System Design Strategies **4–2**
I/O System Configurations 4–2
Networking Configurations 4–2
Automatic I/O Configuration 4–3
Power Budgeting 4–3
Network Configuration and Connections **4–4**
Configuring the DL05's Comm Ports 4–4
DL05 Port Specifications 4–4
Networking DL05 to DL05 RS-232C 4–4
Networking PC to DL05s RS–422 and to Other PLCs 4–5
Modbus Port Configuration 4–6
*Direct*NET Port Configuration 4–7
Network Slave Operation **4–8**
Modbus Function Codes Supported 4–8
Determining the Modbus Address 4–8
If Your Host Software Requires the Data Type and Address... 4–9
Example 1: V2100 4–10
Example 2: Y20 4–10
Example 3: T10 Current Value 4–10
Example 4: C54 4–10
If Your Modbus Host Software Requires an Address ONLY 4–11
Example 1: V2100 584/984 Mode 4–13
Example 2: Y20 584/984 Mode 4–13
Example 3: T10 Current Value 484 Mode 4–13
Example 4: C54 584/984 Mode 4–13
Network Master Operation **4–14**
Step 1: Identify Master Port # and Slave # 4–15
Step 2: Load Number of Bytes to Transfer 4–15
Step 3: Specify Master Memory Area 4–16
Step 4: Specify Slave Memory Area 4–16
Communications from a Ladder Program 4–17
Multiple Read and Write Interlocks 4–17

Chapter 5: Standard RLL and Intelligent Box (IBox) Instructions

Introduction **5–2**
Instruction List 5–2
Using Boolean Instructions **5–4**
END Statement 5–4
Simple Rungs 5–4
Normally Closed Contact 5–5
Contacts in Series 5–5
Midline Outputs 5–5
Parallel Elements 5–6
Joining Series Branches in Parallel 5–6
Joining Parallel Branches in Series 5–6
Combination Networks 5–6
Comparative Boolean 5–7
Boolean Stack 5–7
Immediate Boolean 5–8
Boolean Instructions **5–9**
Comparative Boolean **5–25**
Immediate Instructions **5–31**
Timer, Counter and Shift Register Instructions **5–35**
Using Timers 5–35
Timer Example Using Discrete Status Bits 5–37
Timer Example Using Comparative Contacts 5–37
Accumulating Fast Timer (TMRAF) 5–38
Accumulating Timer Example using Discrete Status Bits 5–39
Accumulator Timer Example Using Comparative Contacts 5–39
Using Counters 5–40
Counter Example Using Discrete Status Bits 5–42
Counter Example Using Comparative Contacts 5–42
Stage Counter Example Using Discrete Status Bits 5–44
Stage Counter Example Using Comparative Contacts 5–44
Up / Down Counter Example Using Discrete Status Bits 5–46
Up / Down Counter Example Using Comparative Contacts 5–46
Accumulator/Stack Load and Output Data Instructions **5–48**

Using the Accumulator 5–48
Copying Data to the Accumulator 5–48
Changing the Accumulator Data 5–49
Using the Accumulator Stack 5–50
Using Pointers 5–51
Logical Instructions (Accumulator) 5–60
Math Instructions 5–68
Bit Operation Instructions 5–82
Number Conversion Instructions (Accumulator) 5–87
Shuffle Digits Block Diagram 5–94
Table Instructions 5–96
Copy Data From a Data Label Area to V-memory 5–98
CPU Control Instructions 5–99
Program Control Instructions 5–101
Understanding Master Control Relays 5–106
MLS/MLR Example 5–107
Interrupt Instructions 5–108
External Interrupt Program Example 5–109
Timed Interrupt Program Example 5–110
Independent Timed Interrupt 5–110
Message Instructions 5–111
Fault Example 5–111
Data Label Example 5–113
Intelligent I/O Instructions 5–118
Network Instructions 5–120
Intelligent Box (IBox) Instructions 5-124
(IBox) Instructions List 5–124

Chapter 1

Getting Started

In This Chapter:

Introduction 1–2
Conventions Used 1–3
DL05 Micro PLC Components 1–4
Programming Methods 1–4
I/O Selection Quick Chart 1–5
Quick Start for PLC Checkout and Programming 1–6
Steps to Designing a Successful System 1–10
Questions and Answers about DL05 Micro PLCs 1–12

1 Introduction

The Purpose of this Manual

Thank you for purchasing a DL05 Micro PLC. This manual shows you how to install, program, and maintain all the Micro PLCs in the DL05 family. It also helps you understand how to interface them to other devices in a control system. This manual contains important information for personnel who will install DL05 PLCs, and for the PLC programmer. If you understand PLC systems our manuals will provide all the information you need to get and keep your system up and running.

Where to Begin

If you already understand the DL05 Micro PLC please read Chapter 2, "Installation, Wiring, and Specifications", and proceed on to other chapters as needed. Be sure to keep this manual handy for reference when you run into questions. If you are a new DL05 customer, we suggest you read this manual completely so you can understand the wide variety of features in the DL05 family of products. We believe you will be pleasantly surprised with how much you can accomplish with **AutomationDirect** products.

Supplemental Manuals

The ***D0–OPTIONS–M*** manual will be most helpful to select and use any of the optional modules that are available for the DL05 PLC which includes the analog I/O modules. If you have purchased operator interfaces or ***Direct***SOFT programming software you will need to supplement this manual with the manuals that are written for these products.

Technical Support

We realize that even though we strive to be the best, we may have arranged our information in such a way you cannot find what you are looking for. First, check these resources for help in locating the information:

- **Table of Contents** – chapter and section listing of contents, in the front of this manual
- **Appendices** – reference material for key topics, near the end of this manual

You can also check our online resources for the latest product support information:

- **Internet** – the address of our website is: **http://www.automationdirect.com**

If you still need assistance, please call us at 770–844–4200. Our technical support team will be available to work with you in answering your questions. They are available Monday through Friday from 9:00 A.M. to 6:00 P.M. Eastern Standard Time.

Conventions Used

When you see the "notepad" icon in the left-hand margin, the paragraph to its immediate right will be a **special note**. Notes represent information that may make your work quicker or more efficient. The word **NOTE:** in boldface will mark the beginning of the text.

When you see the "exclamation point" icon in the left-hand margin, the paragraph to its immediate right will be a **warning**. This information could prevent injury, loss of property, or even death in extreme cases. Any warning in this manual should be regarded as critical information that should be read in its entirety. The word **WARNING** in boldface will mark the beginning of the text.

Key Topics for Each Chapter

The beginning of each chapter will list the key topics that can be found in that chapter.

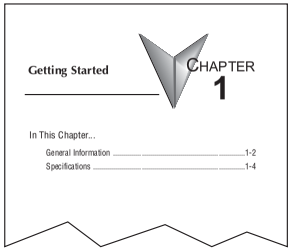

DL05 Micro PLC Components

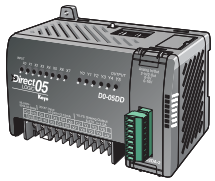

The DL05 Micro PLC family is a versatile product line that provides a wide variety of features in a very compact footprint. The PLCs are small, yet offer many features usually found only in larger, more expensive systems. These include a removable connector, and two RS-232C communication ports.

The DL05 Micro PLC Family

The DL05 Micro PLC family includes eight different versions. All have the same appearance and CPU performance. The CPU offers the same instruction set as our popular DL240 CPU, plus several more instructions specifically designed for machine control applications. All DL05 PLCs have two RS–232C communications ports. Units with DC inputs have selectable high-speed input features on three input points. Units with DC outputs offer selectable pulse output capability on the first and second output points. All DL05 Micro PLCs offer a large amount of program memory, a substantial instruction set and advanced diagnostics. Details of these features and more are covered in Chapter 3, CPU Specifications and Operation. The eight types of DL05 Micro PLCs provide a variety of Input/Output choices, listed in the following table.

DL05 Micro PLC Family

DL05 Part Number	Discrete Input Type	Discrete Output Type	External Power	High-Speed Input	Pulse Output
D0–05AR	AC	Relay	95–240 VAC	No	No
D0–05DR	DC	Relay	95–240 VAC	Yes	No
D0–05AD	AC	DC	95–240 VAC	No	Yes
D0–05DD	DC	DC	95–240 VAC	Yes	Yes
D0–05AA	AC	AC	95–240 VAC	No	No
D0–05DA	DC	AC	95–240 VAC	Yes	No
D0–05DR–D	DC	Relay	12–24 VDC	Yes	No
D0–05DD–D	DC	DC	12–24 VDC	Yes	Yes

*Direct*SOFT 5 Programming for Windows™

The DL05 Micro PLC can be programmed with one of the most advanced programming packages in the industry —*Direct*SOFT 5, a Windows-based software package that supports familiar features such as cut-and-paste between applications, point-and-click editing, viewing and editing multiple application programs at the same time, etc.

*Direct*SOFT 5 universally supports the *Direct*LOGIC CPU families. This means you can use the full version of *Direct*SOFT 5 to program DL05, DL06, DL105, DL205, DL305, DL405 CPUs. The *Direct*SOFT 5 Programming Software User Manual discusses the programming language in depth. *Direct*SOFT version 2.4 or later is needed to program the DL05.

Handheld Programmer

All DL05 Micro PLCs have built-in programming ports for use with the handheld programmer (D2–HPP), the same programmer used with the DL06, DL105 and DL205 families. The handheld programmer can be used to create, modify and debug your application program. A separate manual discusses the Handheld Programmer. Only D2–HPPs with firmware version 1.09 or later will program the DL05.

NOTE: Not all program instructions are available to use with the HHP, such as the DRUM instruction. Use DirectSOFT 5 for these instructions.

I/O Selection Quick Chart

The eight versions of the DL05 have Input/Output circuits which can interface to a wide variety of field devices. In several instances a particular Input or Output circuit can interface to either DC or AC voltages, or both sinking and sourcing circuit arrangements. Check this chart carefully to find the proper DL05 Micro PLC to interface to the field devices in your application.

I/O Selection Chart

DL05 Part Number	INPUTS			OUTPUTS		
	I/O type/ commons	Sink/Source	Voltage Ranges	I/O type/ commons	Sink/Source	Voltage/ Current Ratings
D0–05AR	AC / 2	–	90 – 120 VAC	Relay / 2	Sink or Source	6 – 27VDC, 2A* 6 – 240 VAC, 2A *
D0–05DR	DC / 2	Sink or Source	12 – 24 VDC	Relay / 2	Sink or Source	6 – 27VDC, 2A* 6 – 240 VAC, 2A *
D0–05AD	AC / 2	–	90 – 120 VAC	DC / 1	Sink	6 – 27 VDC, 0.5A (Y0–Y2) 6 – 27 VDC, 1.0A (Y3–Y5)
D0–05DD	DC / 2	Sink or Source	12 – 24 VDC	DC / 1	Sink	6 – 27 VDC, 0.5A (Y0–Y2) 6 – 27 VDC, 1.0A (Y3–Y5)
D0–05AA	AC / 2	–	90 – 120 VAC	AC / 2	–	17 – 240 VAC, 47 – 63 Hz, 0.5A*
D0–05DA	DC / 2	Sink or Source	12 – 24 VDC	AC / 2	–	17 – 240 VAC, 47 – 63 Hz, 0.5A *
D0–05DR–D	DC / 2	Sink or Source	12 – 24 VDC	Relay / 2	Sink or Source	6 – 27 VDC, 2A 6 – 240 VAC, 2A *
D0–05DD–D	DC / 2	Sink or Source	12 – 24 VDC	DC / 1	Sink	6 – 27 VDC, 0.5A (Y0–Y2) 6 – 27 VDC, 1.0A (Y3–Y5)

* See Chapter 2 Specifications for your particular DL05 version.

Quick Start for PLC Checkout and Programming

This example is not intended to tell you everything you need to start-up your system, warnings and helpful tips are in the rest of the manual. It is only intended to give you a general picture of what you will need to do to get your system powered-up.

Step 1: Unpack the DL05 Equipment

Unpack the DL05 and gather the parts necessary to build this demonstration system. The recommended components are:

- DL05 Micro PLC
- AC power cord or DC power supply
- Toggle switches or simulator module, F0-08SIM(see Step 2 on next page).
- Hook-up wire, 16-22 AWG
- DL05 User Manual (this manual)
- A small screwdriver, 5/8" flat or #1 Philips type

You will need at least one of the following programming options:

- *Direct*SOFT 5 Programming Software, *Direct*SOFT 5 Manual, and a programming cable (connects the DL05 to a personal computer), or
- D2-HPP Handheld Programmer (comes with programming cable), and the Handheld Programmer Manual

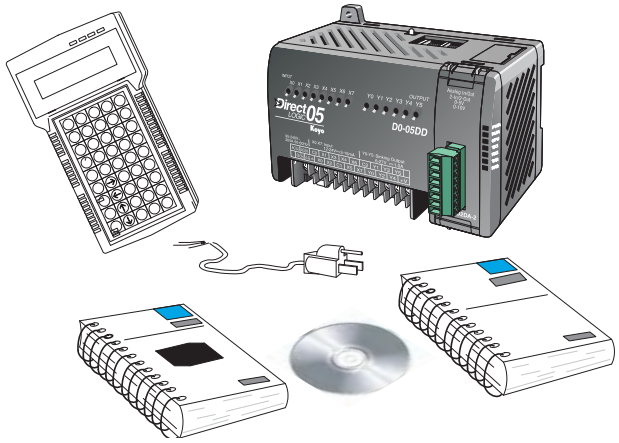

Step 2: Connect Switches to Input Terminals

To finish this quick-start exercise or study other examples in this manual, you'll need to either connect some input switches as shown below or install the F0-08SIM, simulator module, which needs no wiring, into the option slot. If you have DC inputs you will need to use the FA–24PS (24VDC) or another external 12-24VDC power supply. Be sure to follow the instructions in the accompanying *WARNING* note.

D0-O5DR, D0-05DD, D0-05DA
D0-05DR-D, D0-05DD-D
(DC input versions, 12-24VDC)

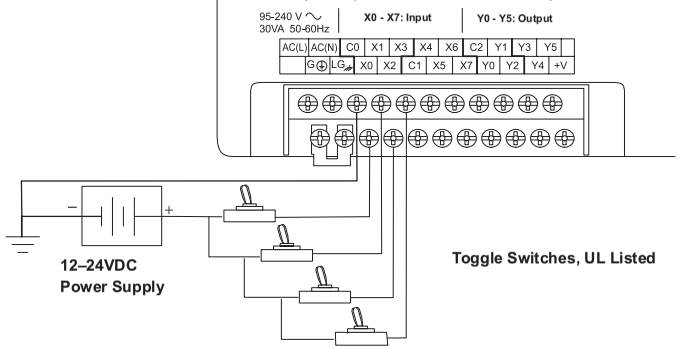

D0–05AR, D0–05AD, D0–05AA
(AC input versions, 120V AC only)

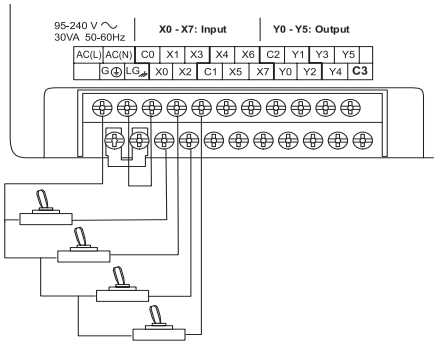

WARNING: DO NOT wire the toggle switches as shown to 240VAC-powered units. The discrete inputs will only accept 120VAC nominal. Also, remove power and unplug the DL05 when wiring the switches. Only use UL-approved switches rated for at least 250VAC, 1A for AC inputs. Firmly mount the switches before using.

Step 3: Connect the Power Wiring

Connect the power input wiring for the DL05. Observe all precautions stated earlier in this manual. For more details on wiring, see Chapter 2 on Installation, Wiring, and Specifications. When the wiring is complete, close the connector covers. Do not apply power at this time.

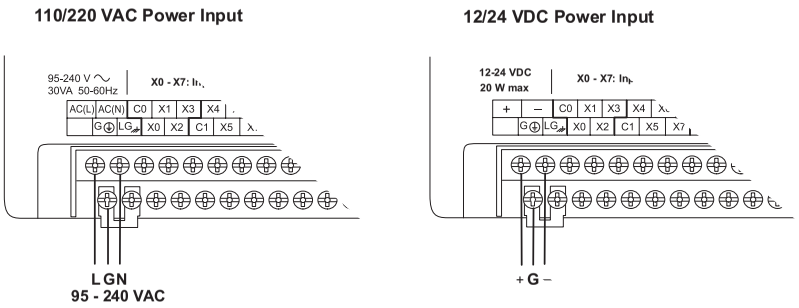

Step 4: Connect the Programming Device

Most programmers will use *Direct*SOFT 5 programming software, installed on a personal computer. Or, you may need the portability of the Handheld Programmer. Both devices will connect to COM port 1 of the DL05 via the appropriate cable.

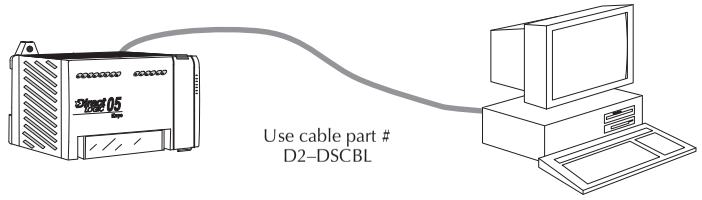

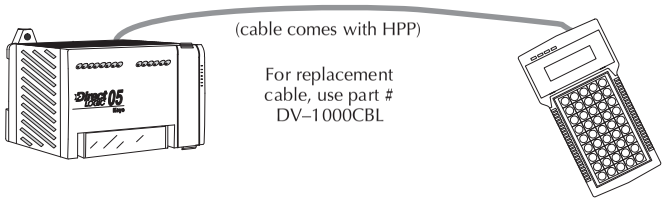

Step 5: Switch on the System Power

Apply power to the system and ensure the PWR indicator on the DL05 is on. If not, remove power from the system and check all wiring and refer to the troubleshooting section in Chapter 9 for assistance.

Step 6: Initialize Scratchpad Memory

It's a good precaution to always clear the system memory (scratchpad memory) on a new DL05. There are two ways to clear the system memory:

- In *Direct*SOFT 5, select the PLC menu, then Setup, then Initialize Scratchpad. For additional information, see the *Direct*SOFT 5 Manual.
- For the Handheld Programmer, use the AUX key and execute AUX 54.

See the Handheld Programmer Manual for additional information.

Step 7: Enter a Ladder Program

At this point, *Direct*SOFT 5 programmers need to refer to the Quick Start Tutorial in the *Direct*SOFT 5 Manual. There you will learn how to establish a communications link with the DL05 PLC, change CPU modes to Run or Program, and enter a program. If you are learning how to program with the Handheld Programmer, make sure the CPU is in Program Mode (the RUN LED on the front of the DL05 should be off). If the RUN LED is on, use the MODE key on the Handheld Programmer to put the PLC in Program Mode. Enter the following keystrokes on the Handheld Programmer.

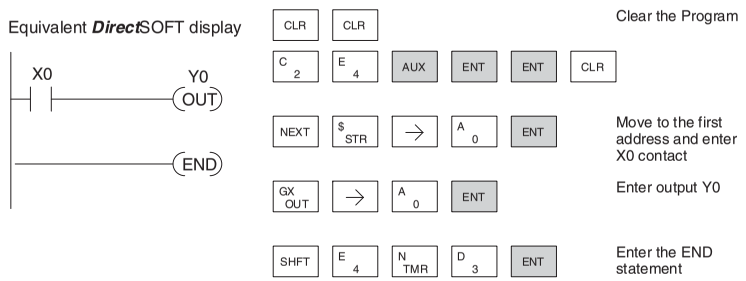

After entering the simple example program put the PLC in Run mode by using the Mode key on the Handheld Programmer.

The RUN indicator on the PLC will illuminate indicating the CPU has entered the Run mode. If not, repeat this step, ensuring the program is entered properly or refer to the troubleshooting guide in chapter 9.

After the CPU enters the run mode, the output status indicator for Y0 should follow the switch status on input channel X0. When the switch is on, the output will be on.

1 Steps to Designing a Successful System

Step 1: Review the Installation Guidelines

Always make safety the first priority in any system design. Chapter 2 provides several guidelines that will help you design a safer, more reliable system. This chapter also includes wiring guidelines for the various versions of the DL05 PLC.

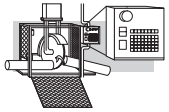

Step 2: Understand the PLC Setup Procedures

The PLC is the heart of your automation system. Make sure you take time to understand the various features and setup requirements.

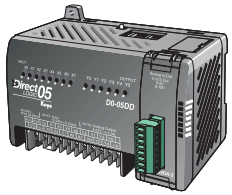

Step 3: Review the I/O Selection Criteria

There are many considerations involved when you select your I/O type and field devices. Take time to understand how the various types of sensors and loads can affect your choice of I/O type.

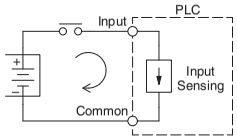

Step 4: Choose a System Wiring Strategy

It is important to understand the various system design options that are available before wiring field devices and field-side power supplies to the Micro PLC.

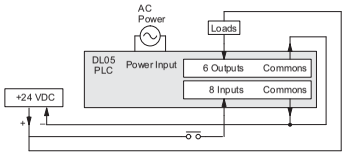

Step 5: Understand the System Operation

Before you begin to enter a program, it is very helpful to understand how the DL05 system processes information. This involves not only program execution steps, but also involves the various modes of operation and memory layout characteristics.

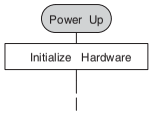

Step 6: Review the Programming Concepts

The DL05 PLC instruction set provides for three main approaches to solving the application program, depicted in the figure below.

- RLL diagram-style programming is the best tool for solving boolean logic and general CPU register/accumulator manipulation. It includes dozens of instructions, which will also be needed to augment drums and stages.
- The Timer/Event Drum Sequencer features up to 16 steps and offers both time and/or event-based step transitions. The DRUM instruction is best for a repetitive process based on a single series of steps.
- Stage programming (also called RLL^{PLUS}) is based on state-transition diagrams. Stages divide the ladder program into sections which correspond to the states in a flow chart you draw for your process.

Standard RLL Programming
(see Chapter 5)

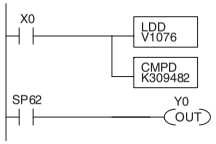

Timer/Event Drum Sequencer
(see Chapter 6)

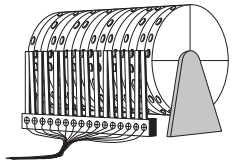

Stage Programming
(see Chapter 7)

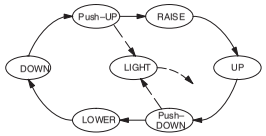

After reviewing the programming concepts above, you'll be equipped with a variety of tools to write your application program.

Step 7: Choose the Instructions

Once you have installed the Micro PLC and understand the main programming concepts, you can begin writing your application program. At that time you will begin to use one of the most powerful instruction sets available in a small PLC.

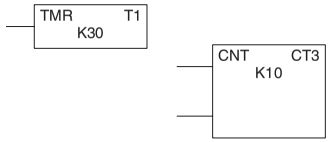

Step 8: Understand the Maintenance and Troubleshooting Procedures

Sometimes equipment failures occur when we least expect it. Switches fail, loads short and need to be replaced, etc. In most cases, the majority of the troubleshooting and maintenance time is spent trying to locate the problem. The DL05 Micro PLC has many built-in features such as error codes that can help you quickly identify problems.

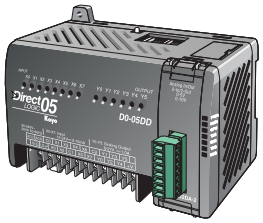

Questions and Answers about DL05 Micro PLCs

Q. What is the instruction set like?

A. The instruction set is very close to our popular DL240 CPU. However, there are significant additions, such as the drum instruction, networking, PID control and High-Speed I/O capabilities.

Q. Do I have to buy the full *Direct*SOFT 5 programming package to program the DL05?

A. No, *Direct*SOFT 5 programming software is available for programming *Direct*LOGIC PLCs for no additional charge; however, it will only allow 100 maximum words to be programmed. Go to **AutomationDirect.com** for more information.

Q. Is the DL05 expandable?

A. No, the DL05 series are stand-alone PLCs with one slot for the installation of an available option module. They do not have expansion bases, such as our DL205 system which has expansion bases, yet are very compact and affordable.

Q. Does the DL05 have motion control capability?

A. Yes. The units with DC I/O have selectable high-speed input features on three inputs. There is also an optional High-Speed Counter I/O module available with special utility software. Either can accept pulse-type input signals for high-speed counting or timing applications and provide high-speed pulse-type output signals for stepper/servo motor control, monitoring, alarm or other discrete control functions. Three types of motion profiles are available, which are explained in Chapter 3.

Q. Are the ladder programs stored in a removable EEPROM?

A. The DL05 contains a non-removable FLASH memory for program storage, which may be written and erased thousands of times. You may transfer programs to/from the DL05 using *Direct*SOFT 5 on a PC, or the HPP (which does support a removable EEPROM). There is an optional CMOS RAM memory cartridge (MC) available (See Chapter 10).

Q. Does the DL05 contain fuses for its outputs?

A. There are no output circuit fuses. Therefore, we recommend fusing each channel, or fusing each common. See Chapter 2 for I/O wiring guidelines.

Q. Is the DL05 Micro PLC U.L. approved?

A. The Micro PLC has met the requirements of UL (Underwriters' Laboratories, Inc.), and CUL (Canadian Underwriters' Laboratories, Inc.).

Q. Does the DL05 Micro PLC comply with European Union (EU) Directives?

A. The Micro PLC has met the requirements of the European Union Directives (CE).

Q. Which devices can I connect to the communication ports of the DL05?

A. **Port 1:** The port is RS-232C, fixed at 9600 baud, and uses the proprietary K-sequence protocol. The DL05 can also connect to Modbus RTU and *Direct*NET networks as a slave device through port 1. The port communicates with the following devices:

- DV-1000 Data Access Unit or Optimation Operator interface panels
- *Direct*SOFT 5 (running on a personal computer)
- D2-HPP handheld programmer
- Other devices which communicate via K-sequence protocol should work with the DL05 Micro PLC. Contact the vendor for details.

A. **Port 2:** The port is RS-232C, with selective baud rates (300-38,400bps), address and parity. It also supports the proprietary K-sequence protocol as well as *Direct*NET and Modbus RTU and non-sequence/print protocols.

Q. Can the DL05 accept 5VDC inputs?

A. No, 5 volts is lower than the DC input ON threshold. However, many TTL logic circuits can drive the inputs if they are wired as open collector (sinking) inputs. See Chapter 2 for I/O wiring guidelines.

Notes

Installation, Wiring, and Specifications

Chapter 2

In This Chapter:

Safety Guidelines 2–2
Orientation to DL05 Front Panel 2–5
Mounting Guidelines 2–7
Wiring Guidelines 2–11
System Wiring Strategies 2–14
Wiring Diagrams and Specifications 2–28
Glossary of Specification Terms 2–44

Safety Guidelines

*NOTE: **Products with CE marks** perform their required functions safely and adhere to relevant standards as specified by CE directives provided they are used according to their intended purpose and that the instructions in this manual are adhered to. The protection provided by the equipment may be impaired if this equipment is used in a manner not specified in this manual. A listing of our international affiliates is available on our Web site: http://www.automationdirect.com*

WARNING: Providing a safe operating environment for personnel and equipment is your responsibility and should be your primary goal during system planning and installation. Automation systems can fail and may result in situations that can cause serious injury to personnel or damage to equipment. Do not rely on the automation system alone to provide a safe operating environment. You should use external electromechanical devices, such as relays or limit switches, that are independent of the PLC application to provide protection for any part of the system that may cause personal injury or damage. Every automation application is different, so there may be special requirements for your particular application. Make sure you follow all national, state, and local government requirements for the proper installation and use of your equipment.

Plan for Safety

The best way to provide a safe operating environment is to make personnel and equipment safety part of the planning process. You should examine every aspect of the system to determine which areas are critical to operator or machine safety. If you are not familiar with PLC system installation practices, or your company does not have established installation guidelines, you should obtain additional information from the following sources.

- NEMA — The National Electrical Manufacturers Association, located in Washington, D.C., publishes many different documents that discuss standards for industrial control systems. You can order these publications directly from NEMA. Some of these include:
  ICS 1, General Standards for Industrial Control and Systems
  ICS 3, Industrial Systems
  ICS 6, Enclosures for Industrial Control Systems
- NEC — The National Electrical Code provides regulations concerning the installation and use of various types of electrical equipment. Copies of the NEC Handbook can often be obtained from your local electrical equipment distributor or your local library.
- Local and State Agencies — many local governments and state governments have additional requirements above and beyond those described in the NEC Handbook. Check with your local Electrical Inspector or Fire Marshall office for information.

Three Levels of Protection

The publications mentioned provide many ideas and requirements for system safety. At a minimum, you should follow these regulations. Also, you should use the following techniques, which provide three levels of system control.

- Emergency stop switch for disconnecting system power
- Mechanical disconnect for output module power
- Orderly system shutdown sequence in the PLC control program

Emergency Stops

It is recommended that emergency stop circuits be incorporated into the system for every machine controlled by a PLC. For maximum safety in a PLC system, these circuits must not be wired into the controller, but should be hardwired external to the PLC. The emergency stop switches should be easily accessed by the operator and are generally wired into a master control relay (MCR) or a safety control relay (SCR) that will remove power from the PLC I/O system in an emergency.

MCRs and SCRs provide a convenient means for removing power from the I/O system during an emergency situation. By de-energizing an MCR (or SCR) coil, power to the input (optional) and output devices is removed. This event occurs when any emergency stop switch opens. However, the PLC continues to receive power and operate even though all its inputs and outputs are disabled.

The MCR circuit could be extended by placing a PLC fault relay (closed during normal PLC operation) in series with any other emergency stop conditions. This would cause the MCR circuit to drop the PLC I/O power in case of a PLC failure (memory error, I/O communications error, etc.).

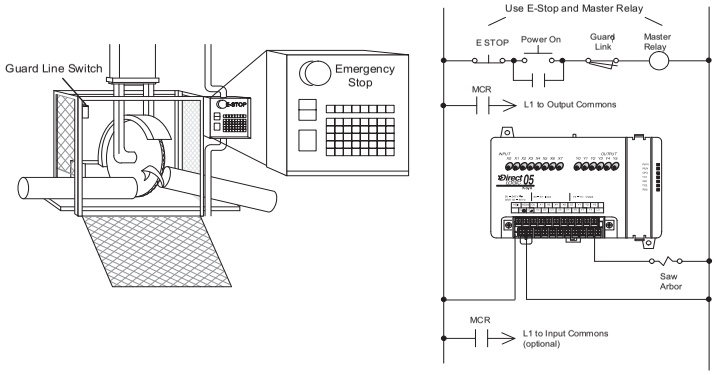

Emergency Power Disconnect

A properly rated emergency power disconnect should be used to power the PLC controlled system as a means of removing the power from the entire control system. It may be necessary to install a capacitor across the disconnect to protect against a condition known as "outrush". This condition occurs when the output Triacs are turned off by powering off the disconnect, thus causing the energy stored in the inductive loads to seek the shortest distance to ground, which is often through the Triacs.

After an emergency shutdown or any other type of power interruption, there may be requirements that must be met before the PLC control program can be restarted. For example, there may be specific register values that must be established (or maintained from the state prior to the shutdown) before operations can resume. In this case, you may want to use retentive memory locations, or include constants in the control program to insure a known starting point.

Orderly System Shutdown

Ideally, the first level of fault detection is the PLC control program, which can identify machine problems. Certain shutdown sequences should be performed. The types of problems are usually things such as jammed parts, etc. that do not pose a risk of personal injury or equipment damage.

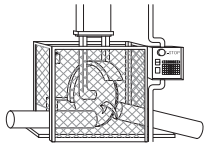

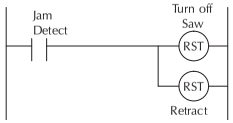

WARNING: The control program must not be the only form of protection for any problems that may result in a risk of personal injury or equipment damage.

Class 1, Division 2 Approval

This equipment is suitable for use in Class 1, Division 2, groups A, B, C and D or non-hazardous locations only.

WARNING: - Explosion Hazard! Substitution of components may impair suitability for Class 1, Division 2.

WARNING: - Do not disconnect equipment unless power has been switched off or area is known to be non-hazardous.

Orientation to DL05 Front Panel

Most connections, indicators, and labels on the DL05 Micro PLCs are located on its front panel. The communication ports are located on the top side of the PLC. Please refer to the drawing below.

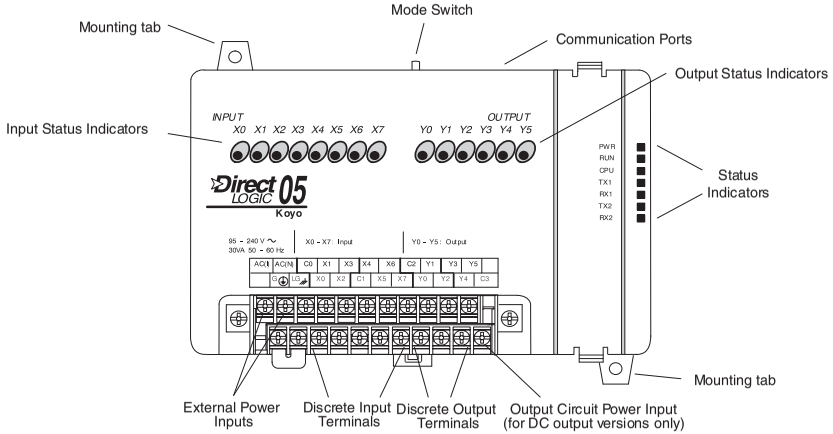

The upper section of the connector accepts external power connections on the two left-most terminals. From left to right, the next five terminals are one of the input commons (C0) and input connections X1, X3, X4, and X6. The remaining four connections are an output common (C2) and output terminals Y1, Y3, and Y5.

The lower section of the connector has the chassis ground (G) and the logic ground (LG) on the two left-most terminals. The next two terminals are for the inputs X0 and X2. Next is the other input common (C1) followed by inputs X5 and X7. The last four terminals are for outputs Y0, Y2, Y4, and the second output common (C3). On DC output units, the end terminal on the right accepts power for the output stage.

An option slot is located on the right end of the PLC. This is where the simulator module can be installed for testing. Option module descriptions available for the DL05 can be found either in the DL05/DL06 Options Modules User Manual, D0-OPTIONS-M, in our catalog or on our website.

WARNING: For some applications, field device power may still be present on the terminal block even though the Micro PLC is turned off. To minimize the risk of electrical shock, check all field device power before you expose or remove either connector wire from under a terminal block, or two 18 AWG wires (one on each side of the screw).

Connector Removal

All of the terminals for the DL05 are contained on one connector block. In some instances, it may be desirable to remove the connector block for easy wiring. The connector is designed for easy removal with just a small screwdriver. The drawing below shows the procedure for removal at one end.

Connector Removal

1. Loosen the retention screws on each end of the connector block.

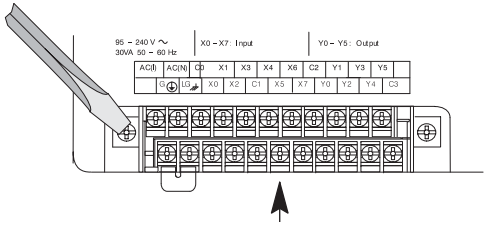

2. From the center of the connector block, pry upward with the screwdriver until the connector is loose.

The terminal block connector on DL05 PLCs has regular screw terminals, which will accept either standard blade-type or #1 Philips screwdriver tips. Use No. 16 to 18 AWG solid/stranded wire. The maximum torque is 0.343Nm (3.036 inch-lbs).

Spare terminal block connectors and connector covers may be ordered by individual part numbers:

Spare Parts -Terminal Block and Cover		
Part Number	**Qty Per Package**	**Description**
F0-IOCON	2	DL05 I/O Terminal Block
D0-AAC-1	1 each	DL05 I/O Terminal Block, I/O Terminal Block Cover, and Option Slot Cover

Mounting Guidelines

In addition to the panel layout guidelines, other specifications can affect the definition and installation of a PLC system. Always consider the following:

- Environmental Specifications
- Power Requirements
- Agency Approvals
- Enclosure Selection and Component Dimensions

Unit Dimensions

The following diagram shows the outside dimensions and mounting hole locations for all versions of the DL05. Make sure you follow the installation guidelines to allow proper spacing from other components.

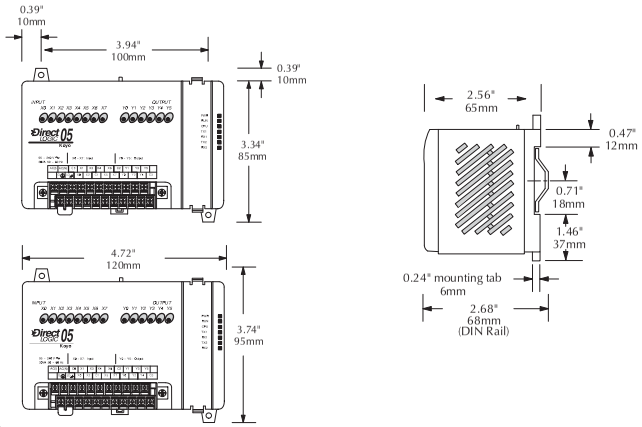

Enclosures

Your selection of a proper enclosure is important to ensure safe and proper operation of your DL05 system. Applications of DL05 systems vary and may require additional features. The minimum considerations for enclosures include:

- Conformance to electrical standards
- Protection from the elements in an industrial environment
- Common ground reference
- Maintenance of specified ambient temperature
- Access to equipment
- Security or restricted access
- Sufficient space for proper installation and maintenance of equipment

Panel Layout & Clearances

There are many things to consider when designing the panel layout. The following items correspond to the diagram shown. Note: there may be additional requirements, depending on your application and use of other components in the cabinet.

1. Mount the PLCs horizontally as shown below to provide proper ventilation. You ***cannot*** mount the DL05 units vertically, upside down, or on a flat horizontal surface. If you place more than one unit in a cabinet, there must be a minimum of 7.2" (183mm) between the units.

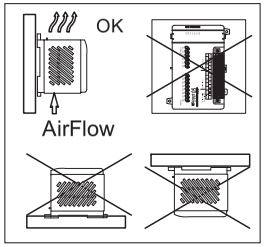

2. Provide a minimum clearance of 2" (50mm) between the unit and all sides of the cabinet. Note, remember to allow for any operator panels or other items mounted in the door.

3. There should also be at least 3" (78mm) of clearance between the unit and any wiring ducts that run parallel to the terminals.

4. The ground terminal on the DL05 base must be connected to a single point ground. Use copper stranded wire to achieve a low impedance. Copper eye lugs should be crimped and soldered to the ends of the stranded wire to ensure good surface contact. Remove anodized finishes and use copper lugs and star washers at termination points.

NOTE: There is a minimum clearance requirement of 2" (51cm) between the panel door (or any devices mounted in the panel door) and the nearest DL05 component.

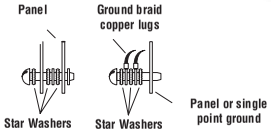

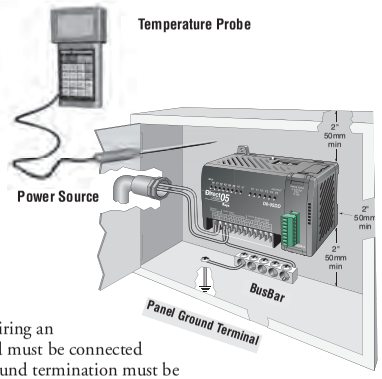

5. There must be a single point ground (i.e. copper bus bar) for all devices in the panel requiring an earth ground return. The single point of ground must be connected to the panel ground termination. The panel ground termination must be connected to earth ground. Minimum wire sizes, color coding, and general safety practices should comply with appropriate electrical codes and standards for your area.

6. A good common ground reference (Earth ground) is essential for proper operation of the DL05. One side of all control and power circuits and the ground lead on flexible shielded cable must be properly connected to common ground reference. Methods which provide a good common ground reference, include:
   a) Installing a ground rod as close to the panel as possible.
   b) Connection to incoming power system ground.

7. Evaluate any installations where the ambient temperature may approach the lower or upper limits of the specifications. If you suspect the ambient temperature will not be within the operating specification for the DL05 system, measures such as installing a cooling/heating source must be taken to get the ambient temperature within the range of specifications.

8. The DL05 systems are designed to be powered by 95-240 VAC or 12–24 VDC normally available throughout an industrial environment. Electrical power in some areas where the PLCs are installed is not always stable and storms can cause power surges. Due to this, powerline filters are recommended for protecting the DL05 PLCs from power surges and EMI/RFI noise. The Automation Powerline Filter, for use with 120 VAC and 240 VAC, 1–5 Amps (part number APF120N05), is an excellent choice, however, you can use a filter of your choice. These units install easily between the power source and the PLC.

NOTE: If you are using other components in your system, make sure you refer to the appropriate manual to determine how those units can affect mounting dimensions.

Using DIN Rail Mounting Rails

DL05 Micro PLCs can be secured to a panel by using mounting rails. We recommend rails that conform to DIN EN standard 50 022. They are approximately 35mm high, with a depth of 7mm. If you mount the Micro PLC on a rail, do consider using end brackets on each side of the PLC. The end bracket helps keep the PLC from sliding horizontally along the rail, reducing the possibility of accidentally pulling the wiring loose. On the bottom of the PLC is a small retaining clip. To secure the PLC to a DIN rail, place it onto the rail and gently push up on the clip to lock it onto the rail. To remove the PLC, pull down on the retaining clip, lift up on the PLC slightly, then pulling it away from the rail.

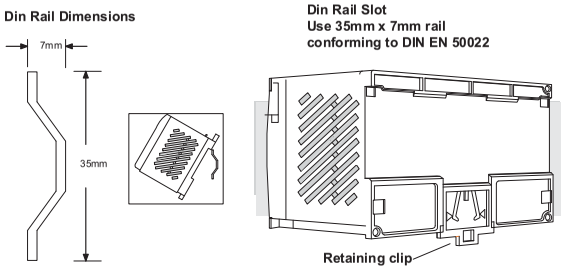

*NOTE: Refer to our catalog for a complete listing of **DINnector** connection systems.*

Environmental Specifications

The following table lists the environmental specifications that generally apply to DL05 Micro PLCs. The ranges that vary for the Handheld Programmer are noted at the bottom of this chart. Certain output circuit types may have derating curves, depending on the ambient temperature and the number of outputs ON. Please refer to the appropriate section in this chapter pertaining to your particular DL05 PLC.

* Operating temperature for the Handheld Programmer and the DV–1000 is 32° to 122° F (0° to 50° C) Storage temperature for the Handheld Programmer and the DV–1000 is –4° to 158° F (–20° to70° C).

** Equipment will operate down to 5% relative humidity. However, static electricity problems occur much more frequently at low humidity levels (below 30%). Make sure you take adequate precautions when you touch the equipment. Consider using ground straps, anti-static floor coverings, etc. if you use the equipment in low-humidity environments.

Environmental Specifications	
Specification	**Rating**
Storage temperature	–4° F to 158° F (–20° C to 70° C)
Ambient operating temperature*	32° F to 131° F (0° C to 55° C)
Ambient humidity**	5% – 95% relative humidity (non–condensing)
Vibration resistance	MIL STD 810C, Method 514.2
Shock resistance	MIL STD 810C, Method 516.2
Noise immunity	NEMA (ICS3–304)
Atmosphere	No corrosive gases
Agency approvals	UL, CE, FCC class A

Agency Approvals

Some applications require agency approvals for particular components. The DL05 Micro PLC agency approvals are listed below:

- UL (Underwriters' Laboratories, Inc.)
- CUL (Canadian Underwriters' Laboratories, Inc.)
- CE (European Economic Union)

Marine Use

American Bureau of Shipping (ABS) certification requires flame-retarding insulation as per 4-8-3/5.3.6(a). ABS will accept Navy low smoke cables, cable qualified to NEC "Plenum rated" (fire resistant level 4), or other similar flammability resistant rated cables. Use cable specifications for your system that meet a recognized flame retardant standard (i.e. UL, IEEE, etc.), including evidence of cable test certification (i.e. tests certificate, UL file number, etc.).

NOTE: Wiring needs to be "low smoke" per the above paragraph. Teflon coated wire is also recommended.

Wiring Guidelines

Connect the power input wiring for the DL05. Observe all precautions stated earlier in this manual. Follow the guidelines in this chapter. When the wiring is complete, close the connector covers. Do not apply power at this time.

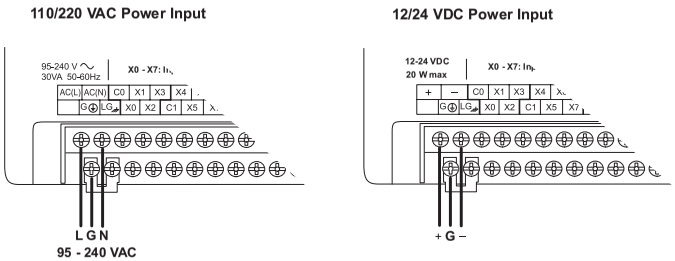

WARNING: Once the power wiring is connected, secure the terminal block cover in the closed position. When the cover is open there is a risk of electrical shock if you accidentally touch the connection terminals or power wiring.

Fuse Protection for Input Power

There are no internal fuses for the input power circuits, so external circuit protection is needed to ensure the safety of service personnel and the safe operation of the equipment itself. To meet UL/CUL specifications, the input power must be fused. Depending on the type of input power being used, follow these fuse protection recommendations:

208/240 VAC Operation

When operating the unit from 208/240 VAC, whether the voltage source is a step-down transformer or from two phases, fuse both the line (L) and neutral (N) leads. The recommended fuse size is 1A, such as AutomationDirect's AGC1, fast-acting fuse.

110/125 VAC Operation

When operating the unit from 110/125 VAC, it is only necessary to fuse the line (L) lead; it is not necessary to fuse the neutral (N) lead. The recommended fuse size is 1.0A.

12/24 VDC Operation

When operating at these lower DC voltages, wire gauge size is just as important as proper fusing techniques. Using large conductors minimizes the voltage drop in the conductor. Each DL05 input power terminal can accommodate one 16 AWG wire or two 18 AWG wires. A DC failure can maintain an arc for much longer time and distance than AC failures. Typically, the main bus is fused at a higher level than the branch device, which in this case is the DL05. The recommended fuse size for the branch circuit to the DL05 is 1A, such as AutomationDirect's AGC1, fast-acting fuse.

External Power Source

The power source must be capable of suppling voltage and current complying with individual Micro PLC specifications, according to the following specifications:

Power Source Specifications		
Item	**DL05 VAC Powered Units**	**DL05 VDC Powered Units**
Input Voltage Range	110/220 VAC (95–240 VAC)	12–24 VDC (10.8–26.4 VDC)
Maximum Inrush Current	13 A, 1ms (95–240 VAC) 15 A, 1ms (240–264 VAC)	10A < 1ms
Maximum Power	30 VA	20 W
Voltage Withstand (dielectric)	1 minute @ 1500 VAC between primary, secondary, field ground	
Insulation Resistance	> 10 MΩ at 500 VDC	

NOTE: The rating between all internal circuits is BASIC INSULATION ONLY.

NOTE: It is possible to use an uninterruptible power supply (UPS); however, the output must be a sinusoidal waveform for the PLC to perform properly.

Planning the Wiring Routes

The following guidelines provide general information on how to wire the I/O connections to DL05 Micro PLCs. For specific information on wiring a particular PLC refer to the corresponding specification sheet further in this chapter.

1. Each terminal connection of the DL05 PLC can accept one 16 AWG wire or two 18 AWG size wires. Do not exceed this recommended capacity.
2. Always use a continuous length of wire. Do not splice wires to attain a needed length.
3. Use the shortest possible wire length.
4. Use wire trays for routing where possible.
5. Avoid running wires near high energy wiring.
6. Avoid running input wiring close to output wiring where possible.
7. To minimize voltage drops when wires must run a long distance, consider using multiple wires for the return line.
8. Avoid running DC wiring in close proximity to AC wiring where possible.
9. Avoid creating sharp bends in the wires.
10. Install the recommended powerline filter to reduce power surges and EMI/RFI noise.

Fuse Protection for Input and Output Circuits

Input and Output circuits on DL05 Micro PLCs do not have internal fuses. In order to protect your Micro PLC, we suggest you add external fuses to your I/O wiring. A fast-blow fuse, with a lower current rating than the I/O bank's common current rating can be wired to each common. Or, a fuse with a rating of slightly less than the maximum current per output point can be added to each output. Refer to the Micro PLC specification tables further in this chapter to find the maximum current per output point or per output common. Adding the external fuse does not guarantee the prevention of Micro PLC damage, but it will provide added protection.

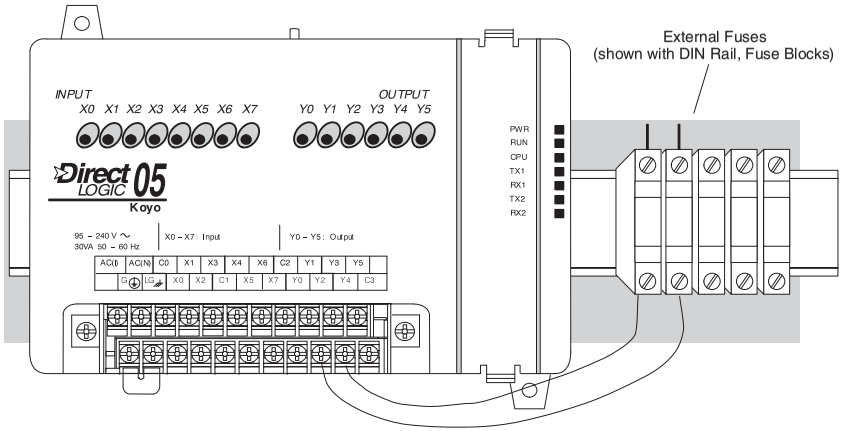

I/O Point Numbering

All DL05 Micro PLCs have a fixed I/O configuration. It follows the same octal numbering system used on other *Direct*Logic family PLCs, starting at X0 and Y0. The letter X is always used to indicate inputs and the letter Y is always used for outputs.

The I/O numbering always starts at zero and does not include the digits 8 or 9. The reference addresses are typically assigned in groups of 8 or 16, depending on the number of points in an I/O group. For the DL05 the eight inputs use reference numbers X0 – X7. The six output points use references Y0 – Y5.

If an optional input module is installed in the option slot, the reference numbers are X100 – X107. A typical output module installed in the option slot will have references Y100 – Y107. See the DL05/06 Options Modules User Manual (D0-OPTIONS-M) for addressing other optional modules.

System Wiring Strategies

The DL05 Micro PLC is very flexible and will work in many different wiring configurations. By studying this section before actual installation, you can probably find the best wiring strategy for your application. This will help to lower system cost, wiring errors, and avoid safety problems.

PLC Isolation Boundaries

PLC circuitry is divided into three main regions separated by isolation boundaries, shown in the drawing below. Electrical isolation provides safety, so that a fault in one area does not damage another. A powerline filter will provide isolation between the power source and the power supply. A transformer in the power supply provides magnetic isolation between the primary and secondary sides. Opto-couplers provide optical isolation in Input and Output circuits. This isolates logic circuitry from the field side, where factory machinery connects. Note that the discrete inputs are isolated from the discrete outputs, because each is isolated from the logic side. Isolation boundaries protect the operator interface (and the operator) from power input faults or field wiring faults. *When wiring a PLC, it is extremely important to avoid making external connections which connect to the logic side of the PLC circuits.*

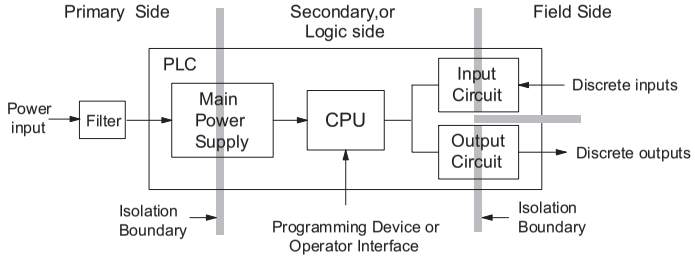

The next figure shows the internal layout of DL05 PLCs, as viewed from the front panel.

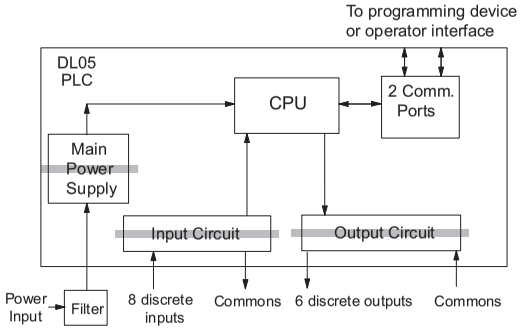

Connecting Operator Interface Devices

Operator interfaces require data and power connections. Operator interfaces with a large CRT usually require separate AC power. However, some small operator interface devices, such as the DV-1000 Data Access Unit, may be powered directly from the DL05 Micro PLC. Connect the DV-1000 to communication port 1 on the DL05 Micro PLC with a DV-1000CBL. A single cable contains transmit/receive data wires and +5V power.

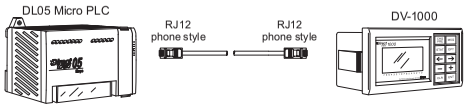

Operator interface panels require separate power and communications connections. Connect the DL05 with the proper cable and power supply for your application.

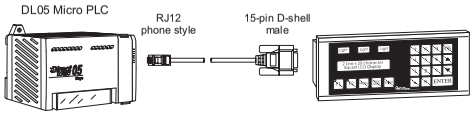

Connecting Programming Devices

DL05 Micro PLCs are programmed using ***Direct***SOFT 5 programming software on a PC. Limited programming can be accomplished with a handheld programmer. The DL05 can be interfaced to the PC with either a serial cable shown below or a Ethernet cable (Ethernet requires either an H0-ECOM or H0-ECOM100 module installed in the option slot). See the **AutomationDirect** catalog to chose the cable or Ethernet card for whichever method will meet your system requirements.

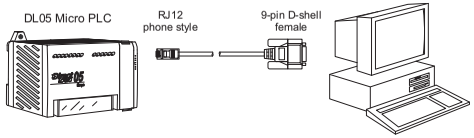

The D2-HPP Handheld Programmer comes with a communications cable. For a replacement cable, order a DV-1000CBL.

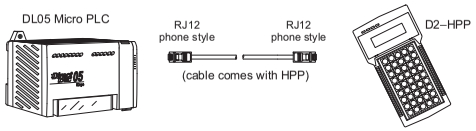

Sinking/Sourcing Concepts

Before going further in our study of wiring strategies, we must have a solid understanding of "sinking" and "sourcing" concepts. Use of these terms occurs frequently in input or output circuit discussions. It is the goal of this section to make these concepts easy to understand, further ensuring your success in installation. First we give the following short definitions, followed by practical applications.

Sinking = Path to supply ground (–)

Sourcing = Path to supply source (+)

First you will notice that these are only associated with DC circuits and not AC, because of the reference to (+) and (–) polarities. Therefore, *sinking and sourcing terminology only applies to DC input and output circuits.* Input and output points that are either sinking or sourcing can conduct current in only one direction. This means it is possible to connect the external supply and field device to the I/O point with current trying to flow in the wrong direction, and the circuit will not operate. However, we can successfully connect the supply and field device every time by understanding "sourcing" and "sinking".

For example, the figure to the right depicts a "sinking" input. To properly connect the external supply, we just have to connect it so the input *provides a path to ground (–)*. So, we start at the PLC input terminal, follow through the input sensing circuit, exit at the common terminal, and connect the supply (–) to the common terminal. By adding the switch, between the supply (+) and the input, we have completed the circuit. Current flows in the direction of the arrow when the switch is closed.

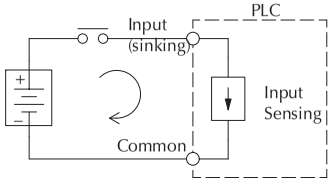

By applying the circuit principle above to the four possible combinations of input/output sinking/sourcing types, we have the four circuits as shown below. DL05 Micro PLCs provide all except the sourcing output I/O circuit types.

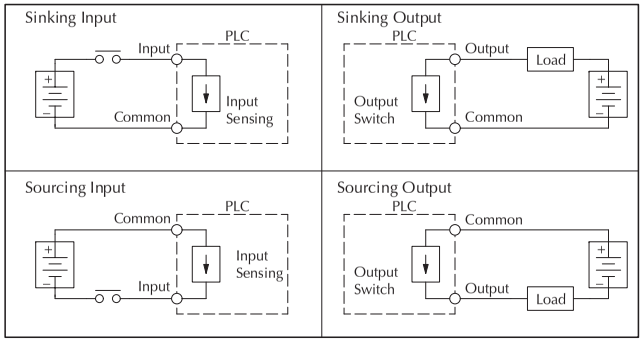

I/O "Common" Terminal Concepts

In order for a PLC I/O circuit to operate, current must enter at one terminal and exit at another. This means at least two terminals are associated with every I/O point. In the figure to the right, the Input or Output terminal is the *main path* for the current. One additional terminal must provide the *return path* to the power supply.

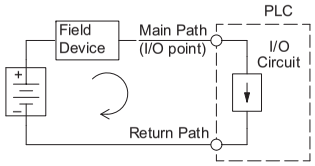

If we had unlimited space and budget for I/O terminals, then every I/O point could have two dedicated terminals just as the figure above shows. However, providing this level of flexibility is not practical or even necessary for most applications. So, most Input or Output point groups on PLCs share the return path among two or more I/O points. The figure to the right shows a group (*or bank*) of 4 input points which share a common return path. In this way, the four inputs require only five terminals instead of eight.

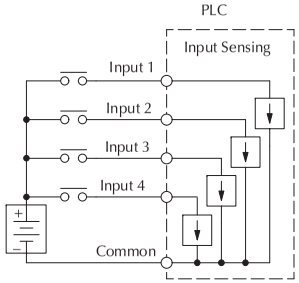

Note: In the circuit above, the current in the common path is 4 times any channel's input current when all inputs are energized. This is especially important in output circuits, where heavier gauge wire is sometimes necessary on commons.

Most DL05 input and output circuits are grouped into banks that share a common return path. The best indication of I/O The I/O common grouping bar, labeled at the right, occurs in the section of wiring label below it. It indicates X0, X1, X2, and X3 share the common terminal located to the left of X1.

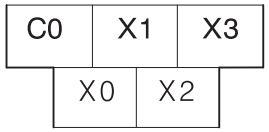

The following complete label shows two banks of four inputs and two banks of three outputs. One common is provided for each bank.

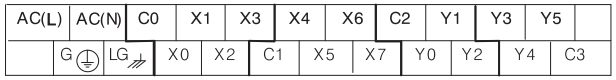

The following label is for DC output versions. One common is provided for all of the outputs and the terminal on the bottom right accepts power for the output stage.

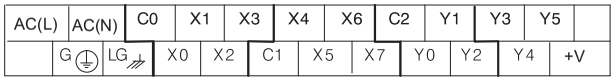

Connecting DC I/O to Solid State Field Devices

In the previous section on Sourcing and Sinking concepts, we explained that DC I/O circuits sometimes will only allow current to flow one way. This is also true for many of the field devices which have solid-state (transistor) interfaces. In other words, field devices can also be sourcing or sinking. *When connecting two devices in a series DC circuit, one must be wired as sourcing and the other as sinking.*

Solid State Input Sensors

The DL05's DC inputs are flexible in that they detect current flow in either direction, so they can be wired as either sourcing or sinking. In the following circuit, a field device has an open-collector NPN transistor output. It sinks current from the PLC input point, which sources current. The power supply can be the FA-24PS +24 VDC power supply or another supply (+12 VDC or +24VDC), as long as the input specifications are met.

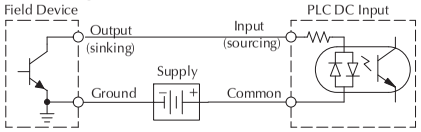

In the next circuit, a field device has an open-emitter PNP transistor output. It sources current to the PLC input point, which sinks the current back to ground. Since the field device is sourcing current, no additional power supply is required.

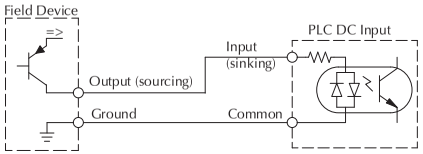

Solid State Output Loads

Sometimes an application requires connecting a PLC output point to a solid state input on a device. This type of connection is usually made to carry a low-level signal, not to send DC power to an actuator.

The DL05's DC outputs are sinking-only. This means that each DC output provides a path to ground when it is energized. Also, remember that all six outputs have the same electrical common, even though there are two common terminal screws. Finally, recall that the DC output circuit requires power (20 – 28 VDC) from an external power source.

In the following circuit, the PLC output point sinks current to the output common when energized. It is connected to a sourcing input of a field device input.

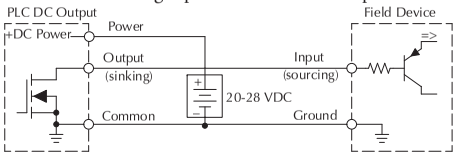

In the next example we connect a PLC DC output point to the sinking input of a field device. This is a bit tricky, because both the PLC output and field device input are sinking type. Since the circuit must have one sourcing and one sinking device, we add sourcing capability to the PLC output by using a pull-up resistor. In the circuit below, we connect $R_{pull\text{-}up}$ from the output to the DC output circuit power input.

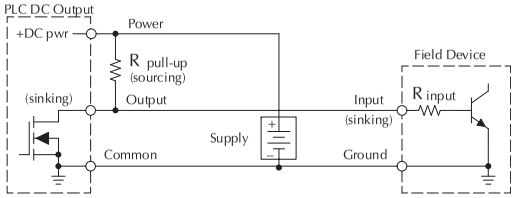

NOTE 1: DO NOT attempt to drive a heavy load (>25 mA) with this pull-up method.
NOTE 2: Using the pull-up resistor to implement a sourcing output has the effect of inverting the output point logic. In other words, the field device input is energized when the PLC output is OFF, from a ladder logic point-of-view. Your ladder program must comprehend this and generate an inverted output. Or, you may choose to cancel the effect of the inversion elsewhere, such as in the field device.

It is important to choose the correct value of $R_{pull\text{-}up}$. In order to do so, we need to know the nominal input current to the field device (I_{input}) when the input is energized. If this value is not known, it can be calculated as shown (a typical value is 15 mA). Then use I input and the voltage of the external supply to compute $R_{pull\text{-}up}$. Then calculate the power $P_{pull\text{-}up}$ (in watts), in order to size $R_{pull\text{-}up}$ properly.

$$I_{input} = \frac{V_{input\ (turn\text{-}on)}}{R_{input}}$$

$$R_{pull\text{-}up} = \frac{V_{supply} - 0.7}{I_{input}} - R_{input} \qquad P_{pull\text{-}up} = \frac{V_{supply}^2}{R_{pullup}}$$

The drawing below shows the actual wiring of the DL05 Micro PLC to the supply and pull-up resistor.

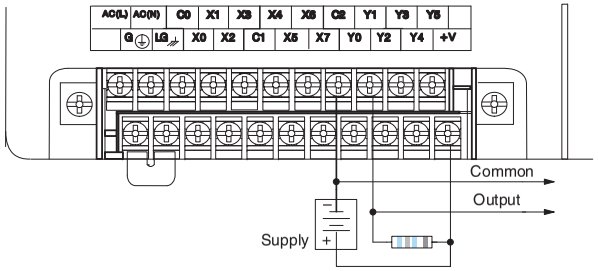

Relay Output Wiring Methods

The D0–05AR and the D0–05DR models feature relay outputs. Relays are best for the following applications:

- Loads that require higher currents than the solid-state DL05 outputs can deliver
- Cost-sensitive applications
- Some output channels need isolation from other outputs (such as when some loads require AC while others require DC)

Some applications in which NOT to use relays:

- Loads that require currents under 10 mA
- Loads which must be switched at high speed and duty cycle

Assuming relays are right for your application, we're now ready to explore various ways to wire relay outputs to the loads. Note that there are six normally-open SPST relays available. They are organized with three relays per common. The figure below shows the relays and the internal wiring of the PLC. Note that each group is isolated from the other group of outputs.

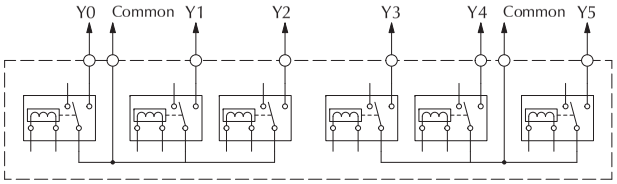

In the circuit below, all loads use the same AC power supply which powers the DL05 PLC. In this example, all commons are connected together.

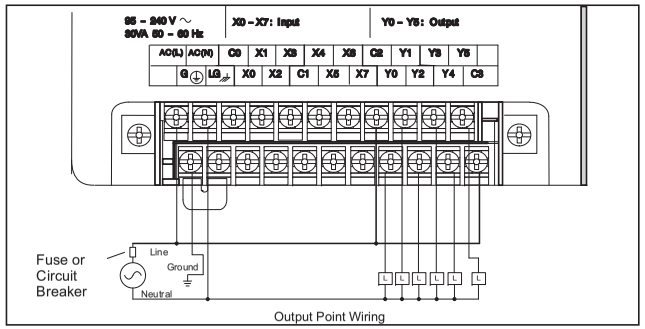

In the circuit on the following page, loads for Y0 – Y2 use the same AC power supply which powers the DL05 PLC. Loads for Y3 – Y5 use a separate DC supply. In this example, the commons are separated according to which supply powers the associated load.

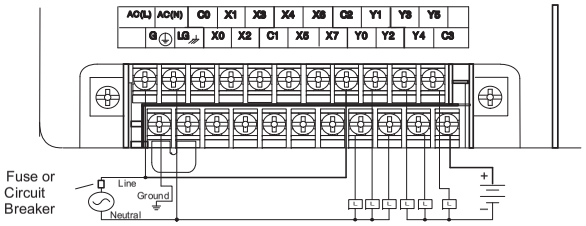

Output Point Wiring

Surge Suppression For Inductive Loads

Inductive load devices (devices with a coil) generate transient voltages when de-energized with a relay contact. When a relay contact is closed it "bounces", which energizes and de-energizes the coil until the "bouncing" stops. The transient voltages generated are much larger in amplitude than the supply voltage, especially with a DC supply voltage.

When switching a DC-supplied inductive load the full supply voltage is always present when the relay contact opens (or "bounces"). When switching an AC-supplied inductive load there will be times when the relay contact will open (or "bounce") when the AC sine wave is at zero crossing. If the voltage is not zero when the relay contact opens, there is energy stored in the inductor that is released when the voltage to the inductor is suddenly removed. This release of energy is the cause of the transient voltages.

When inductive load devices (motors, motor starters, interposing relays, solenoids, valves, etc.) are controlled with relay contacts, it is recommended that a surge suppression device be connected directly across the coil of the field device. If the inductive device has plug-type connectors, the suppression device can be installed on the terminal block of the relay output.

Transient Voltage Suppressors (TVS or transorb) provide the best surge and transient suppression of AC and DC powered coils, providing the fastest response with the smallest overshoot.

Metal Oxide Varistors (MOV) provide the next best surge and transient suppression of AC and DC powered coils.

For example, the waveform in the figure below shows the energy released when opening a contact switching a 24 VDC solenoid. Notice the large voltage spike.

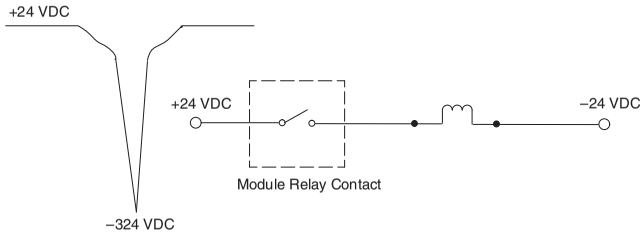

This figure shows the same circuit with a transorb (TVS) across the coil. Notice that the voltage spike is significantly reduced.

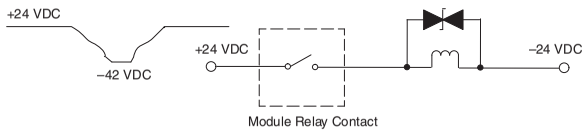

Use the following table to help select a TVS or MOV suppressor for your application based on the inductive load voltage.

Surge Suppressors			
Vendor / Catalog	**Type**	**Inductive Load Voltage**	**Part Number**
AutomationDirect Transient Voltage Suppressors, LiteOn Diodes; from Digi-Key Catalog: Phone: 1-800-344-4539	TVS TVS TVS TVS Diode	110/120 VAC 24 VDC 220/240 VAC 12/24 VDC 12/24 VDC	ZL-TD8-120 ZL-TD8-24 P6KE350CA P6K30CAGICT–ND 1N4004CT–ND
Digi-key www.digikey.com	MOV MOV	110/120 VAC 220/240 VAC	Contact Digi-Key, Corp.

Prolonging Relay Contact Life

Relay contacts wear according to the amount of relay switching, amount of spark created at the time of open or closure, and presence of airborne contaminants. There are some steps you can take to help prolong the life of relay contacts, such as switching the relay on or off only when it is necessary, and if possible, switching the load on or off at a time when it will draw the least current. Also, take measures to suppress inductive voltage spikes from inductive DC loads such as contactors and solenoids.

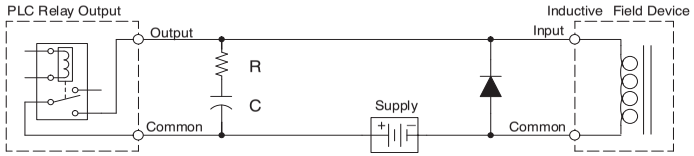

Adding external contact protection may extend relay life beyond the number of contact cycles listed in the specification tables for relay modules. High current inductive loads such as clutches, brakes, motors, direct-acting solenoid valves and motor starters will benefit the most from external contact protection.

When using an RC network, locate it close to the relay module output connector. To find the values for the RC snubber network, first determine the voltage across the contacts when open, and the current through them when closed. If the load supply is AC, then convert the current and voltage values to peak values.

Now you are ready to calculate values for R and C, according to the formulas:

$$C\ (\mu F) = \frac{I^2}{10} \qquad R\ (\Omega) = \frac{V}{10 \times I^x}\ \text{, where } x = 1 + \frac{50}{V}$$

C minimum = 0.001 µF, the voltage rating of C must be ≥ V, non-polarized

R minimum = 0.5 Ω, 1/2 W, tolerance is ± 5%

For example, suppose a relay contact drives a load at 120VAC, 1/2 A. Since this example has an AC power source, first calculate the peak values:

$$I_{peak} = I_{rms} \times 1.414, = 0.5 \times 1.414 = 0.707 \text{ Amperes}$$

$$V_{peak} = V_{rms} \times 1.414 = 120 \times 1.414 = 169.7 \text{ Volts}$$

Now, finding the values of R and C,:

$$C\ (\mu F) = \frac{I^2}{10} = \frac{0.707^2}{10} = 0.05\ \mu F\text{, voltage rating} \geq 170 \text{ Volts}$$

$$R\ (\Omega) = \frac{V}{10 \times I^x}\ \text{, where } x = 1 + \frac{50}{V}$$

$$x = 1 + \frac{50}{169.7} = 1.29 \qquad R\ (\Omega) = \frac{169.7}{10 \times 0.707^{1.29}} = 26\ \Omega\text{, 1/2 W, } \pm 5\%$$

For inductive loads in DC circuits we recommend using a suppression diode as shown in the diagram. When the load is energized the diode is reverse-biased (high impedance). When the load is turned off, energy stored in its coil is released in the form of a negative-going voltage spike. At this moment the diode is forward-biased (low impedance) and shunts the energy to ground. This protects the relay contacts from the high voltage arc that would occur just as the contacts are opening.

WARNING: DO NOT use this circuit with an AC power supply.

Place the diode as close to the inductive field device as possible. Use a diode with a peak inverse voltage rating (PIV) at least 100 PIV, 3A forward current or larger. Use a fast-recovery type (such as Schottky type). DO NOT use a small-signal diode such as 1N914, 1N941, etc. Be sure the diode is in the circuit correctly before operation. If installed backwards, it will short-circuit the supply when the relay energizes.

DO NOT use this circuit with an AC power supply.

DC Input Wiring Methods

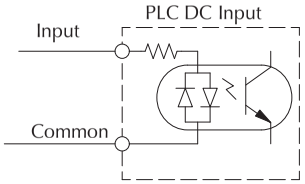

DL05 Micro PLCs with DC inputs are particularly flexible because they can be either sinking or sourcing. The dual diodes (shown to the right) allow 10.8 – 26.4 VDC. The target applications are +12 VDC and +24 VDC. You can actually wire half of the inputs as DC sinking and the other half as DC sourcing. Inputs grouped by a common must be all sinking or all sourcing.

In the first and simplest example below, all commons are connected together and all inputs are sinking.

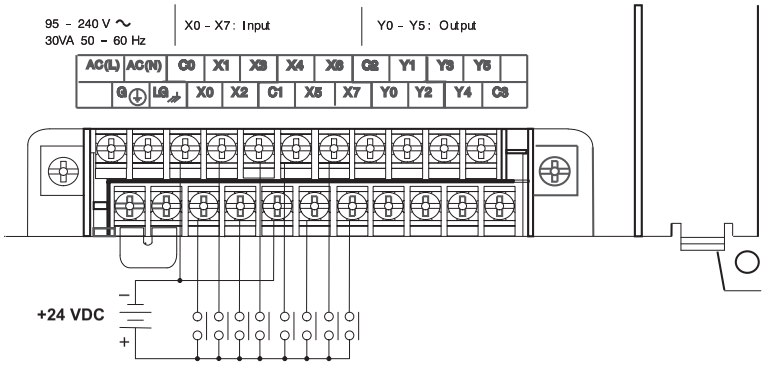

In the next example, the first four inputs are sinking, and the last four are sourcing.

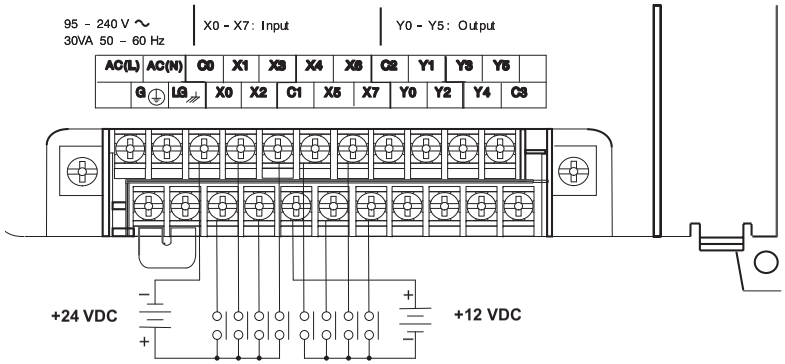

DC Output Wiring Methods

DL05 DC output circuits are high-performance transistor switches with low on-resistance and fast switching times. Please note the following characteristics which are unique to the DC output type:

- There is only one electrical common for all six outputs. All six outputs belong to one bank.
- The output switches are current-sinking only. However, you can still use different DC voltages from one load to another.
- The output circuit inside the PLC requires external power. The supply (–) must be connected to a common terminal, and the supply (+) connects the right-most terminal on the upper connector.

In the example below, all six outputs share a common supply.

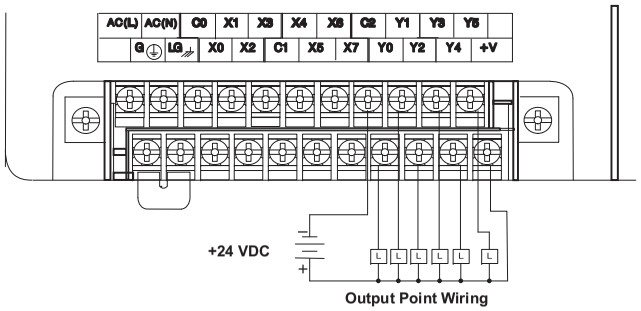

In the next example below, the outputs have "split" supplies. The first three outputs are using a +12 VDC supply, and the last three are using a +24 VDC supply. However, you can split the outputs among any number of supplies, as long as:

- all supply voltages are within the specified range
- all output points are wired as sinking
- all source (–) terminals are connected together

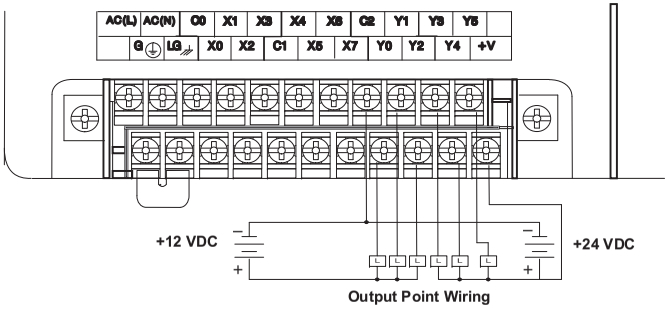

High Speed I/O Wiring Methods

DL05 versions with DC type input or output points contain a dedicated High-Speed I/O circuit (HSIO). The circuit configuration is programmable, and it processes select I/O points independently from the CPU scan. Chapter 3 discusses the programming options for HSIO. While the HSIO circuit has six modes, we show wiring diagrams for two of the most popular modes in this chapter. The high-speed input interfaces to points X0 – X2. Properly configured, the DL05 can count quadrature pulses at up to 5 kHz.

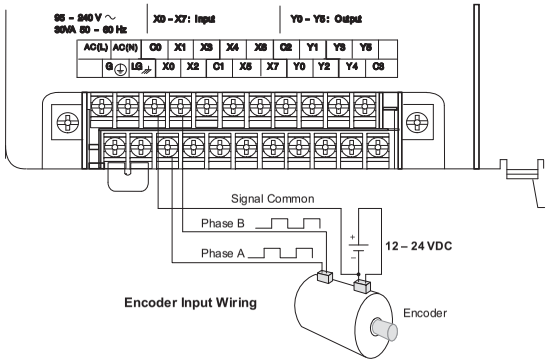

DL05 versions with DC type output points can use the High Speed I/O Pulse Output feature. It can generate high-speed pulses up to 7 KHz for specialized control such as stepper motor / intelligent drive systems. Output Y0 and Y1 can generate pulse and direction signals, or it can generate CCW and CW pulse signals respectively. See Appendix E on high-speed input and pulse output options.

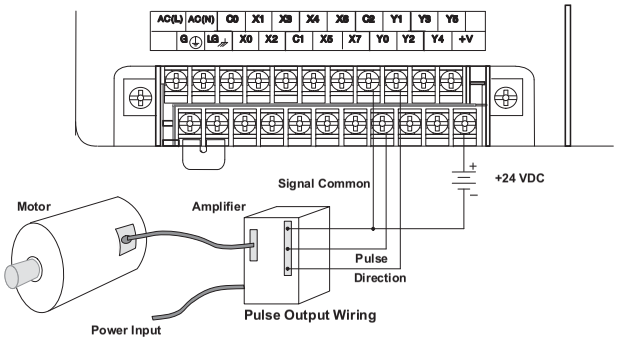

This page is intentionally left blank.

Wiring Diagrams and Specifications

The remainder of this chapter dedicates two pages to each of the eight versions of DL05 Micro PLCs. Each section contains a basic wiring diagram, equivalent I/O circuits, and specification tables. Please refer to the section which describes the particular DL05 version used in your application.

D0–05AR I/O Wiring Diagram

The D0–05AR Micro PLC features eight AC inputs and six relay contact outputs. The following diagram shows a typical field wiring example. The AC external power connection uses four terminals at the left as shown.

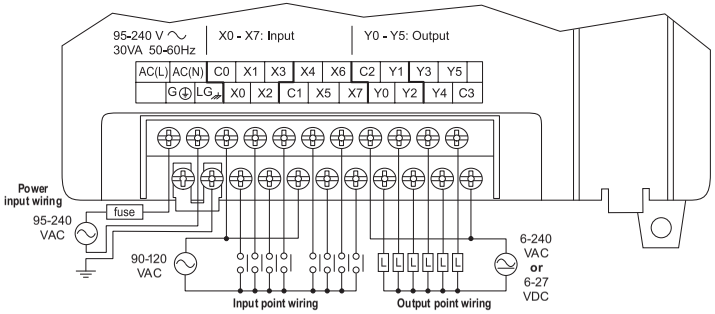

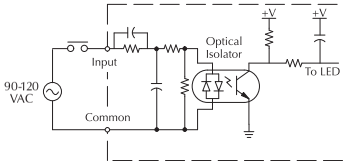

Equivalent Input Circuit

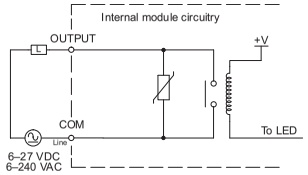

Equivalent Output Circuit

The eight AC input channels use terminals in the middle of the connector. Inputs are organized into two banks of four. Each bank has a common terminal. The wiring example above shows all commons connected together, but separate supplies and common circuits may be used. The equivalent input circuit shows one channel of a typical bank.

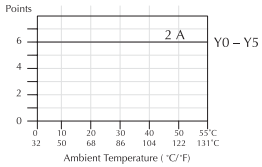

Derating Chart for Relay Outputs

The six relay output channels use terminals on the right side of the connector. Outputs are organized into two banks of three normally-open relay contacts. Each bank has a common terminal. The wiring example on the last page shows all commons connected together, but separate supplies and common circuits may be used. The equivalent output circuit shows one channel of a typical bank. The relay contacts can switch AC or DC voltages.

D0-05AR General Specifications	
External Power Requirements	95 – 240 VAC, 30 VA maximum,
Communication Port 1, 9600 baud (Fixed), 8 data bits, 1 stop bit, odd parity	K–Sequence (Slave), ***Direct***NET (Slave), Modbus (Slave)
Communication Port 2, 9600 baud (default), 8 data bits, 1 stop bit, odd parity	K–Sequence (Slave), ***Direct***NET (Master/Slave), Modbus (Master/Slave) Non-sequence/print
Programming cable type	D2–DSCBL
Operating Temperature	32 to 131° F (0 to 55 C)
Storage Temperature	–4 to 158° F (–20 to 70 C)
Relative Humidity	5 to 95% (non-condensing)
Environmental air	No corrosive gases permitted
Vibration	MIL STD 810C 514.2
Shock	MIL STD 810C 516.2
Noise Immunity	NEMA ICS3–304
Terminal Type	Removable
Wire Gauge	One 16AWG or two 18AWG, 24AWG minimum

AC Input Specifications X0-X7	
Input Voltage Range (Min. - Max.)	80 – 132 VAC, 47 - 63 Hz
Operating Voltage Range	90 – 120 VAC, 47 -63 Hz
Input Current	8 mA @ 100 VAC at 50 Hz, 10 mA @ 100 VAC at 60 Hz
Max. Input Current	12 mA @ 132 VAC at 50 Hz, 15 mA @ 132 VAC at 60 Hz
Input Impedance	14KΩ @50 Hz, 12KΩ @60 Hz
ON Current/Voltage	>6 mA @ 75 VAC
OFF Current/Voltage	<2 mA @ 20 VAC
OFF to ON Response	< 40 ms
ON to OFF Response	< 40 ms
Status Indicators	Logic Side
Commons	4 channels/common x 2 banks

Relay Output Specifications Y0-Y5	
Output Voltage Range	(Min. – Max.) 5 – 264 VAC (47 -63 Hz), 5 – 30 VDC
Operating Voltage Range	6 – 240 VAC (47 -63 Hz), 6 – 27 VDC
Output Current	2A/point, 6A/ common
Max. leakage current	0.1 mA @264VAC
Smallest Recommended Load	5 mA @5 VDC
OFF to ON Response	< 15 ms
ON to OFF Response	< 10 ms
Status Indicators	Logic Side
Commons	3 channels/common x 2 banks
Fuses	None (external recommended)

D0–05DR I/O Wiring Diagram

These micro PLCs feature eight DC inputs and six relay contact outputs. The following diagram shows a typical field wiring example. The AC external power connection uses four terminals at the left as shown.

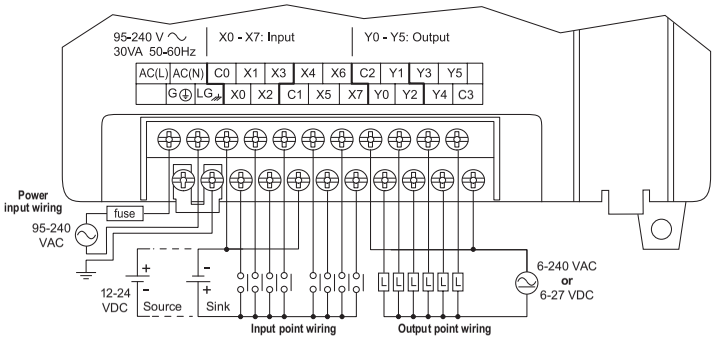

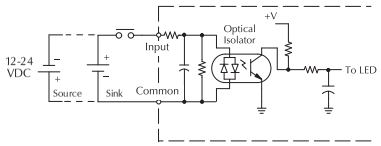

Equivalent Circuit, High-speed Inputs (X0-X2)

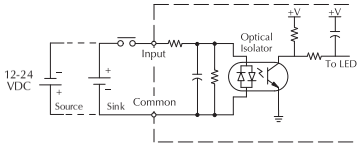

Equivalent Circuit, Standard Inputs (X3-X7)

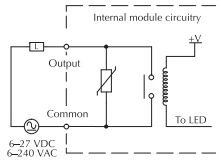

Equivalent Output Circuit

The eight DC input channels use terminals in the middle of the connector. Inputs are organized into two banks of four. Each bank has an isolated common terminal, and may be wired as either sinking or sourcing inputs. The wiring example above shows all commons connected together, but separate supplies and common circuits may be used. The equivalent circuit for standard inputs and the high-speed input circuit are shown above.

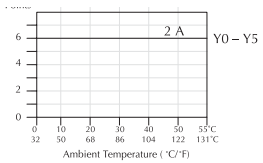

Derating Chart for Relay Outputs

The six output channels use terminals on the right side of the connector. Outputs are organized into two banks of three normally-open relay contacts. Each bank has a common terminal. The wiring example above shows all commons connected together, but separate supplies and common circuits may be used. The equivalent output circuit shows one channel of a typical bank. The relay contacts can switch AC or DC voltages.

D0-05DR General Specifications	
External Power Requirements	95 – 240 VAC, 30 VA maximum,
Communication Port 1, 9600 baud (Fixed), 8 data bits, 1 stop bit, odd parity	K–Sequence (Slave), ***Direct***NET (Slave), Modbus (Slave)
Communication Port 2, 9600 baud (default), 8 data bits, 1 stop bit, odd parity	K–Sequence (Slave), ***Direct***NET (Master/Slave), Modbus (Master/Slave) Non-sequence / print
Programming cable type	D2–DSCBL
Operating Temperature	32 to 131° F (0 to 55 C)
Storage Temperature	–4 to 158° F (–20 to 70 C)
Relative Humidity	5 to 95% (non-condensing)
Environmental air	No corrosive gases permitted
Vibration	MIL STD 810C 514.2
Shock	MIL STD 810C 516.2
Noise Immunity	NEMA ICS3–304
Terminal Type	Removable
Wire Gauge	One 16AWG or two 18AWG, 24AWG minimum

DC Input Specifications		
Parameter	High–Speed Inputs, X0 – X2	Standard DC Inputs X3 – X7
Min. - Max. Voltage Range	10.8 – 26.4 VDC	10.8 – 26.4 VDC
Operating Voltage Range	12 -24 VDC	12 -24 VDC
Peak Voltage	30 VDC (5 kHz maximum frequency)	30 VDC
Minimum Pulse Width	100 µs	N/A
ON Voltage Level	> 10 VDC	> 10 VDC
OFF Voltage Level	< 2.0 VDC	< 2.0 VDC
Input Impedance	1.8 kΩ @ 12 – 24 VDC	2.8 kΩ @ 12 – 24 VDC
Max. Input Current	6mA @12VDC, 13mA @24VDC	4mA @12VDC, 8.5mA @24VDC
Minimum ON Current	>5 mA	>4 mA
Maximum OFF Current	< 0.5 mA	<0.5 mA
OFF to ON Response	<100 µs	2 – 8 ms, 4 ms typical
ON to OFF Response	< 100 µs	2 – 8 ms, 4 ms typical
Status Indicators	Logic side	Logic side
Commons	4 channels/common x 2 bank	

Relay Output Specifications	
Output Voltage Range (Min. - Max.)	5 -264 VAC (47 -63 Hz), 5 - 30 VDC
Operating Voltage	6 -240 VAC (47 -63 Hz), 6 - 27 VDC
Output Current	2A / point, 6A/ common
Maximum Voltage	264 VAC, 30 VDC
Max leakage current	0.1 mA @264 VAC
Smallest Recommended Load	5 mA
OFF to ON Response	< 15 ms
ON to OFF Response	< 10 ms
Status Indicators	Logic Side
Commons	3 channels/common x 2 banks
Fuses	None (external recommended)

D0–05AD I/O Wiring Diagram

The D0–05AD Micro PLC features eight AC inputs and six DC outputs. The following diagram shows a typical field wiring example. The AC external power connection uses four terminals at the left as shown.

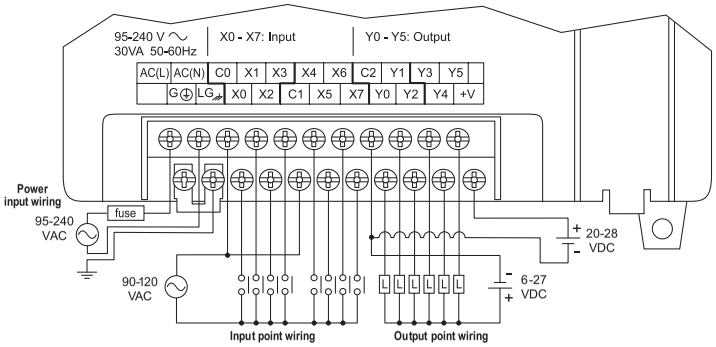

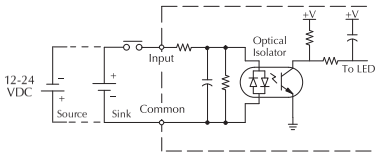

Equivalent Input Circuit

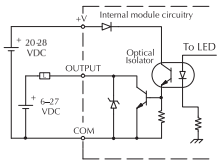

Equivalent Output Circuit

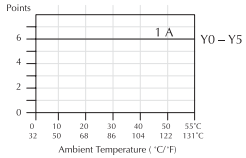

Derating Chart for DC Outputs

The eight AC input channels use terminals in the middle of the connector. Inputs are organized into two banks of four. Each bank has an isolated common terminal. The wiring example above shows all commons connected together, but separate supplies and common circuits may be used. The equivalent input circuit shows one channel of a typical bank.

The six current sinking DC output channels use terminals on the right side of the connector. All outputs actually share the same electrical common. Note the requirement for external power on the end (right-most) terminal. The equivalent output circuit shows one channel of the bank of six.

D0-05AD General Specifications	
External Power Requirements	95 – 240 VAC, 30 VA maximum,
Communication Port 1, 9600 baud (Fixed), 8 data bits, 1 stop bit, odd parity	K–Sequence (Slave), ***Direct***NET (Slave), Modbus (Slave)
Communication Port 2, 9600 baud (default), 8 data bits, 1 stop bit, odd parity	K–Sequence (Slave), ***Direct***NET (Master/Slave), Modbus (Master/Slave) Non-sequence/print
Programming cable type	D2–DSCBL
Operating Temperature	32 to 131° F (0 to 55 C)
Storage Temperature	–4 to 158° F (–20 to 70 C)
Relative Humidity	5 to 95% (non-condensing)
Environmental air	No corrosive gases permitted
Vibration	MIL STD 810C 514.2
Shock	MIL STD 810C 516.2
Noise Immunity	NEMA ICS3–304
Terminal Type	Removable
Wire Gauge	One 16AWG or two 18AWG, 24AWG minimum

AC Input Specifications	
Input Voltage Range (Min. - Max.)	80 – 132 VAC, 47 - 63 Hz
Operating Voltage Range	90 – 120 VAC, 47 - 63 Hz
Input Current	8 mA @ 100 VAC (50Hz), 10 mA @ 100 VAC (60Hz)
Max. Input Current	12 mA @ 132 VAC (50Hz), 15 mA @ 132 VAC (60Hz)
Input Impedance	14KΩ @50 Hz, 12KΩ @60 Hz
ON Current/Voltage	>6 mA @ 75 VAC
OFF Current/Voltage	<2 mA @ 20 VAC
OFF to ON Response	< 40 ms
ON to OFF Response	< 40 ms
Status Indicators	Logic Side
Commons	4 channels/common x 2 banks

DC Output Specifications		
Parameter	**Pulse Outputs, Y0 – Y1**	**Standard Outputs, Y2 – Y5**
Min. - Max. Voltage Range	5 – 30 VDC	5 – 30 VDC
Operating Voltage	6 – 27 VDC	6 – 27 VDC
Peak Voltage	< 50 VDC (7 kHz max. frequency)	< 50 VDC
On Voltage Drop	0.3 VDC @ 1A	0.3 VDC @ 1A
Max Current (resistive)	0.5 A/pt. (1A/point for standard pt.)	1.0 A/point
Max leakage current	15 µA @ 30 VDC	15 µA @ 30 VDC
Max inrush current	2 A for 100 mS	2 A for 100 mS
External DC power required	20 - 28 VDC max 150mA	20 - 28 VDC max 150mA
OFF to ON Response	<10 µs	< 10 µs
ON to OFF Response	<30 µs	< 60 µs
Status Indicators	Logic Side	Logic Side
Commons	6 channels/common x 1 bank	
Fuses	None	None

D0–05DD I/O Wiring Diagram

These micro PLCs feature eight DC inputs and six DC outputs. The following diagram shows a typical field wiring example. The AC external power connection uses four terminals at the left as shown.

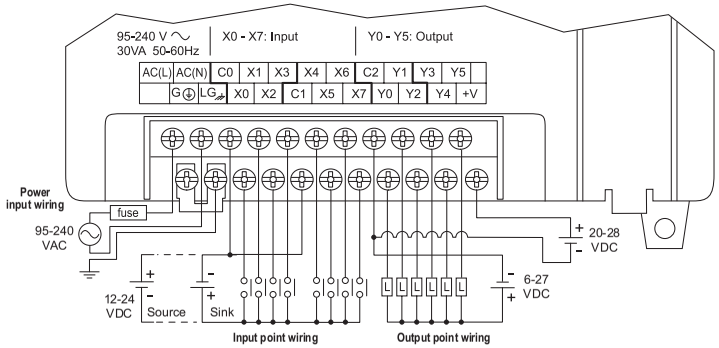

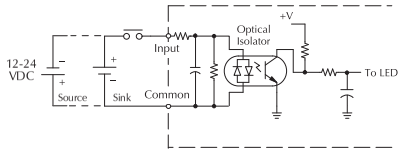

Equivalent Circuit, High Speed Input (X0-X2)

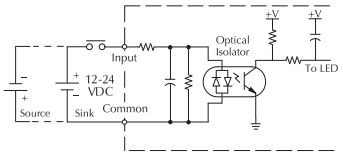

Equivalent Circuit, Standard Input (X3-X7)

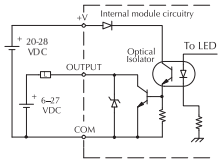

Equivalent Circuit, Standard Output (Y2-Y5)

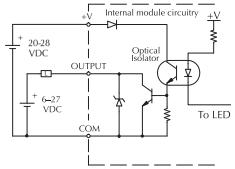

Equivalent Circuit, DC Pulse Output (Y0-Y1)

The eight DC input channels use terminals in the middle of the connector. Inputs are organized into two banks of four. Each bank has an isolated common terminal, and may be wired as either sinking or sourcing inputs. The wiring example above shows all commons connected together, but separate supplies and common circuits may be used. The equivalent circuits for standard inputs and the high-speed inputs are shown above.

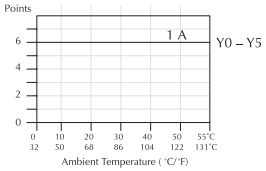

Derating Chart for DC Outputs

The six current sinking DC output channels use terminals on the right side of the connector. All outputs actually share the same electrical common. Note the requirement for external power on the end (right-most) terminal. The equivalent output circuit shows one channel of the bank of six.

D0-05DD General Specifications	
External Power Requirements	95 – 240 VAC, 30 VA maximum,
Communication Port 1, 9600 baud (Fixed), 8 data bits, 1 stop bit, odd parity	K–Sequence (Slave), ***Direct***NET (Slave), Modbus (Slave)
Communication Port 2, 9600 baud (default), 8 data bits, 1 stop bit, odd parity	K–Sequence (Slave), ***Direct***NET (Master/Slave), Modbus (Master/Slave) Non-sequence/print
Programming cable type	D2–DSCBL
Operating Temperature	32 to 131° F (0 to 55 C)
Storage Temperature	–4 to 158° F (–20 to 70 C)
Relative Humidity	5 to 95% (non-condensing)
Environmental air	No corrosive gases permitted
Vibration	MIL STD 810C 514.2
Shock	MIL STD 810C 516.2
Noise Immunity	NEMA ICS3–304
Terminal Type	Removable
Wire Gauge	One16 AWG or two 18 AWG, 24 AWG minimum

DC Input Specifications		
Parameter	**High–Speed Inputs, X0 – X2**	**Standard DC Inputs X3 – X7**
Min. - Max. Voltage Range	10.8 – 26.4 VDC	10.8 – 26.4 VDC
Operating Voltage Range	12 – 24 VDC	12 – 24 VDC
Peak Voltage	30 VDC (5 kHz maximum frequency)	30 VDC
Minimum Pulse Width	100 µs	N/A
ON Voltage Level	> 9.0 VDC	> 9.0 VDC
OFF Voltage Level	< 2.0 VDC	< 2.0 VDC
Max. Input Current	6mA @12VDC, 13mA @24VDC	4mA @12VDC, 8.5mA @24VDC
Input Impedance	1.8 KΩ @ 12 – 24 VDC	2.8 KΩ @ 12 – 24 VDC
Minimum ON Current	>5 mA	>4 mA
Maximum OFF Current	< 0.5 mA	<0.5 mA
OFF to ON Response	<100 µs 2 – 8 ms	4 ms typical
ON to OFF Response	< 100 µs 2 – 8 ms	4 ms typical
Status Indicators	Logic side	Logic side
Commons	4 channels/common x 2 banks	

DC Output Specifications		
Parameter	**Pulse Outputs Y0 – Y1**	**Standard Outputs Y3 – Y5**
Min. - Max. Voltage Range	5 – 30 VDC	5 – 30 VDC
Operating Voltage	6 – 27 VDC	6 – 27 VDC
Peak Voltage	< 50 VDC (7 kHz max. frequency)	< 50 VDC
On Voltage Drop	0.3 VDC @ 1 A	0.3 VDC @ 1 A
Max Current (resistive)	0.5 A/pt., 1A/pt. as standard pt.	1.0 A/point
Max leakage current	15 A @ 30 VDC	15 A @ 30 VDC
Max inrush current	2 A for 100 ms	2 A for 100 ms
External DC power required	20 - 28 VDC Max 150mA	20 - 28 VDC Max 150mA
OFF to ON Response	< 10µ s	< 10 µs
ON to OFF Response	< 30 µs	< 60 µs
Status Indicators	Logic Side	Logic Side
Commons	6 channels/common x 1 bank	
Fuses	None (external recommended)	

D0–05AA I/O Wiring Diagram

The D0–05AA Micro PLC features eight AC inputs and six AC outputs. The following diagram shows a typical field wiring example. The AC external power connection uses four terminals at the left as shown.

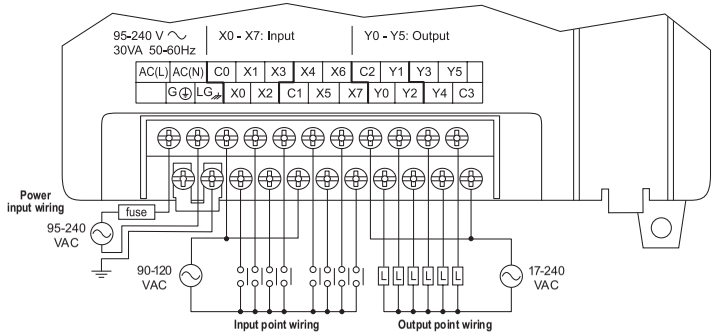

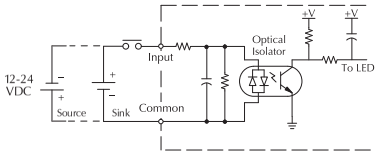

Equivalent Input Circuit

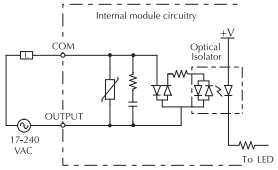

Equivalent Output Circuit

The eight AC input channels use terminals in the middle of the connector. Inputs are organized into two banks of four. Each bank has an isolated common terminal. The wiring example above shows all commons connected together, but separate supplies and common circuits may be used. The equivalent input circuit shows one channel of a typical bank.

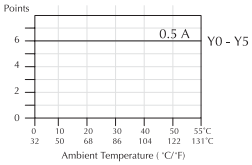

Derating Chart for AC Outputs

The six output channels use terminals on the right side of the connector. Outputs are organized into two banks of three triac switches. Each bank has a common terminal. The wiring example above shows all commons connected together, but separate supplies and common circuits may be used. The equivalent output circuit shows one channel of a typical bank.

D0-05AA General Specifications	
External Power Requirements	95 – 240 VAC, 30 VA maximum,
Communication Port 1, 9600 baud (Fixed), 8 data bits, 1 stop bit odd parity	K–Sequence (Slave), ***Direct***NET (Slave), Modbus (Slave)
Communication Port 2, 9600 baud (default) 8 data bits, 1 stop bit odd parity	K–Sequence (Slave), ***Direct***NET (Master/Slave), Modbus (Master/Slave) Non-sequence/print
Programming cable type	D2–DSCBL
Operating Temperature	32 to 131° F (0 to 55 C)
Storage Temperature	–4 to 158° F (–20 to 70 C)
Relative Humidity	5 to 95% (non-condensing)
Environmental air	No corrosive gases permitted
Vibration	MIL STD 810C 514.2
Shock	MIL STD 810C 516.2
Noise Immunity	NEMA ICS3–304
Terminal Type	Removable
Wire Gauge	One 16AWG or two 18AWG, 24AWG minimum

AC Input Specifications	
Input Voltage Range (Min. - Max.)	80 – 132 VAC, 47 - 63 Hz
Operating Voltage Range	90 – 120 VAC, 47 - 63 Hz
Input Current	8 mA @100 VAC at 50 Hz 10 mA @100 VAC at 60 Hz
Max. Input Current	12 mA @132 VAC at 50 Hz 15 mA @132 VAC at 60 Hz
Input Impedance	14 KΩ @ 50 Hz, 12 KΩ @ 60Hz
ON Current/Voltage	> 6 mA @ 75 VAC
OFF Current/Voltage	< 2 mA @ 20 VAC
OFF to ON Response	< 40 ms
ON to OFF Response	< 40 ms
Status Indicators	Logic Side
Commons	4 channels/common x 2 banks

AC Output Specifications	
Output Voltage Range (Min. - Max.)	15 – 264 VAC, 47 – 63 Hz
Operating Voltage	17 – 240 VAC, 47 – 63 Hz
On Voltage Drop	1.5 VAC (>50mA) 4.0 VAC (<50mA)
Max Current	0.5 A/point, 1.5 A/common
Max leakage current	<4 mA @ 264 VAC
Max inrush current	10 A for 10 ms
Minimum Load	10 mA
OFF to ON Response	1 ms
ON to OFF Response	1 ms +1/2 cycle
Status Indicators	Logic Side
Commons	3 channels/common x 2 banks
Fuses	None (external recommended)

D0–05DA I/O Wiring Diagram

The D0–05DA Micro PLC features eight DC inputs and six AC outputs. The following diagram shows a typical field wiring example. The AC external power connection uses four terminals at the left as shown.

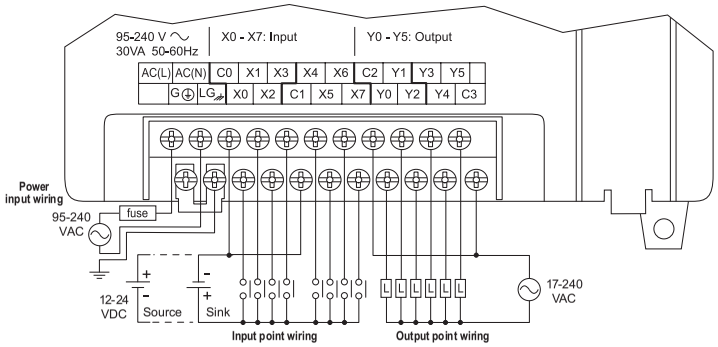

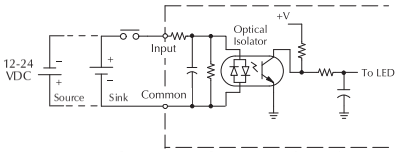

Equivalent Circuit, High Speed Input (X0-X2)

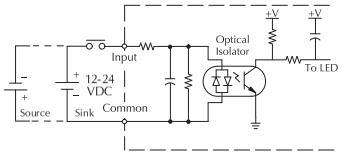

Equivalent Circuit, Standard Input (X3-X7)

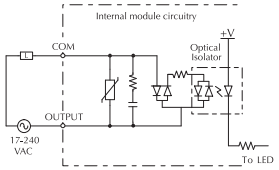

Equivalent Circuit, Output

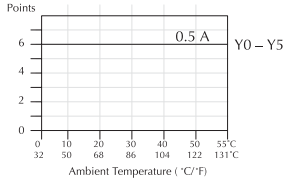

Derating Chart for AC Outputs

The eight DC input channels use terminals in the middle of the connector. Inputs are organized into two banks of four. Each bank has an isolated common terminal, and may be wired as sinking or sourcing inputs. The wiring example above shows all commons connected together, but separate supplies and common circuits may be used. The equivalent circuit for standard inputs and the high-speed input circuit are shown above.

The six output channels use terminals on the right side of the connector. Outputs are organized into two banks of three triac switches. Each bank has a common terminal. The wiring example above shows all commons connected together, but separate supplies and common circuits may be used. The equivalent output circuit shows one channel of a typical bank.

D0-05DA General Specifications	
External Power Requirements	95 – 240 VAC, 30 VA maximum,
Communication Port 1, 9600 baud (Fixed), 8 data bits, 1 stop bit, odd parity	K–Sequence (Slave), ***Direct***NET (Slave), Modbus (Slave)
Communication Port 2, 9600 baud (default), 8 data bits, 1 stop bit, odd parity	K–Sequence (Slave), ***Direct***NET (Master/Slave), Modbus (Master/Slave) Non-sequence/print
Programming cable type	D2–DSCBL
Operating Temperature	32 to 131° F (0 to 55 C)
Storage Temperature	–4 to 158° F (–20 to 70 C)
Relative Humidity	5 to 95% (non-condensing)
Environmental air	No corrosive gases permitted
Vibration	MIL STD 810C 514.2
Shock	MIL STD 810C 516.2
Noise Immunity	NEMA ICS3–304
Terminal Type	Removable
Wire Gauge	One 16 AWG or two 18 AWG, 24AWG minimum

DC Input Specifications		
Parameter	**High–Speed Inputs, X0 – X2**	**Standard DC Inputs X3 – X7**
Input Voltage Range	10.8 – 26.4 VDC	10.8 – 26.4 VDC
Operating Voltage Range	12 – 24 VDC	12 – 24 VDC
Maximum Voltage	30 VDC (5 kHz maximum frequency)	30 VDC
Minimum Pulse Width	100 µs	N/A
ON Voltage Level	> 10 VDC	> 10 VDC
OFF Voltage Level	< 2.0 VDC	< 2.0 VDC
Input Impedance	1.8 kΩ @ 12 – 24 VDC	2.8 kΩ @ 12 – 24 VDC
Minimum ON Current	>5 mA	>4 mA
Maximum OFF Current	< 0.5 mA	<0.5 mA
OFF to ON Response	<100 µs	2 – 8 ms, 4 ms typical
ON to OFF Response	< 100 µs	2 – 8 ms, 4 ms typical
Status Indicators	Logic side	Logic side
Commons	4 channels / common x 2 banks	

AC Output Specifications	
Output Voltage Range (Min. - Max.)	15 – 264 VAC, 47 – 63 Hz
Operating Voltage	17 – 240 VAC, 47 – 63 Hz
On Voltage Drop	1.5 VAC @> 50mA, 4 VAC @< 50mA
Max Current	0.5 A/point, 1.5 A/common
Max leakage current	< 4 mA @ 264 VAC, 60Hz
Max inrush current	10 A for 10 ms
Minimum Load	10 mA
OFF to ON Response	1 ms
ON to OFF Response	1 ms +1/2 cycle
Status Indicators	Logic Side
Commons	3 channels / common x 2 banks
Fuses	None (external recommended)

D0–05DR-D I/O Wiring Diagram

These micro PLCs feature eight DC inputs and six relay contact outputs. The following diagram shows a typical field wiring example. The DC external power connection uses three terminals at the left as shown.

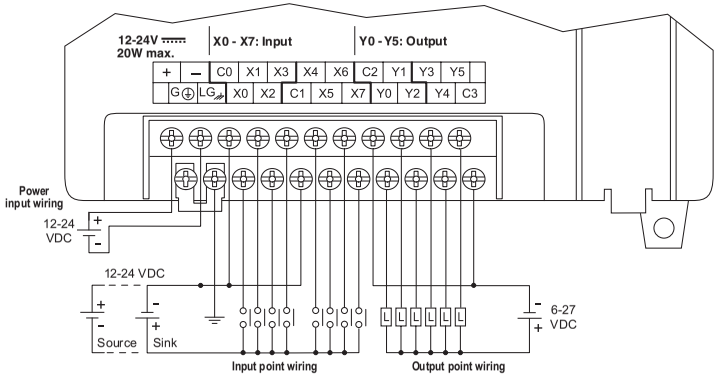

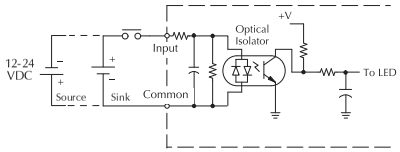

Equivalent Circuit, High-speed Input (X0-X2)

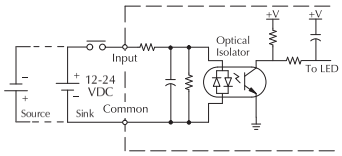

Equivalent Circuit, Standard Input (X3-X7)

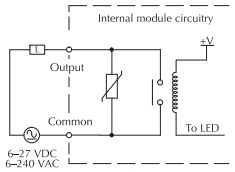

Equivalent Circuit, Standard Output

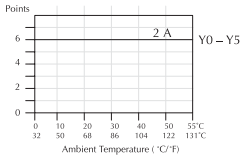

Derating Chart for Relay Outputs

The eight DC input channels use terminals in the middle of the connector. Inputs are organized into two banks of four. Each bank has an isolated common terminal, and may be wired as either sinking or sourcing inputs. The wiring example above shows all commons connected together, but separate supplies and common circuits may be used. The equivalent circuit for standard inputs and the high-speed input circuit are shown above.

The six output channels use terminals on the right side of the connector. Outputs are organized into two banks of three normally-open relay contacts. Each bank has a common terminal. The wiring example above shows all commons connected together, but separate supplies and common circuits may be used. The equivalent output circuit shows one channel of a typical bank. The relay contacts can switch AC or DC voltages.

D0-05DR-D General Specifications	
External Power Requirements	12 – 24 VDC, 20 W maximum,
Communication Port 1, 9600 baud (Fixed), 8 data bits, 1 stop bit, odd parity	K–Sequence (Slave), ***Direct***NET (Slave), Modbus (Slave)
Communication Port 2, 9600 baud (default), 8 data bits, 1 stop bit, odd parity	K–Sequence (Slave), ***Direct***NET (Master/Slave), Modbus (Master/Slave) Non-sequence/print
Programming cable type	D2–DSCBL
Operating Temperature	32 to 131° F (0 to 55 C)
Storage Temperature	–4 to 158° F (–20 to 70 C)
Relative Humidity	5 to 95% (non-condensing)
Environmental air	No corrosive gases permitted
Vibration	MIL STD 810C 514.2
Shock	MIL STD 810C 516.2
Noise Immunity	NEMA ICS3–304
Terminal Type	Removable
Wire Gauge	One 16AWG or two 18AWG, 24AWG minimum

DC Input Specifications		
Parameter	**High–Speed Inputs, X0 – X2**	**Standard DC Inputs X3 – X7**
Min. - Max. Voltage Range	10.8 – 26.4 VDC	10.8 – 26.4 VDC
Operating Voltage Range	12 -24 VDC	12 -24 VDC
Peak Voltage	30 VDC (5 kHz maximum frequency)	30 VDC
Minimum Pulse Width	100 µs	N/A
ON Voltage Level	> 10 VDC	> 10 VDC
OFF Voltage Level	< 2.0 VDC	< 2.0 VDC
Input Impedance	1.8 kΩ @ 12 – 24 VDC	2.8 kΩ @ 12 – 24 VDC
Max. Input Current	6mA @12VDC ,13mA @24VDC	4mA @12VDC, 8.5mA @24VDC
Minimum ON Current	>5 mA	>4 mA
Maximum OFF Current	< 0.5 mA	<0.5 mA
OFF to ON Response	<100 µs	2 – 8 ms, 4 ms typical
ON to OFF Response	< 100 µs	2 – 8 ms, 4 ms typical
Status Indicators	Logic side	Logic side
Commons	4 channels / common x 2 banks	

Relay Output Specifications	
Output Voltage Range (Min. - Max.)	5 -264 VAC (47 -63 Hz), 5 - 30 VDC
Operating Voltage	6 -240 VAC (47 -63 Hz), 6 - 27 VDC
Output Current	2A/point 6A/common
Maximum Voltage	264 VAC, 30 VDC
Max leakage current	0.1 mA @264 VAC
Smallest Recommended Load	5 mA
OFF to ON Response	< 15 ms
ON to OFF Response	< 10 ms
Status Indicators	Logic Side
Commons	3 channels/common x 2 banks
Fuses	None (external recommended)

D0–05DD–D I/O Wiring Diagram

These micro PLCs feature eight DC inputs and six DC outputs. The following diagram shows a typical field wiring example. The DC external power connection uses four terminals at the left as shown.

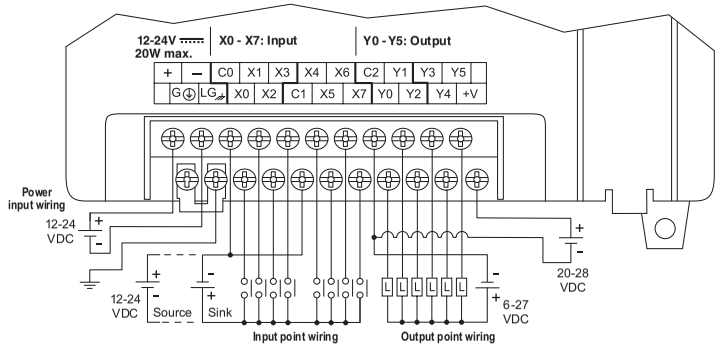

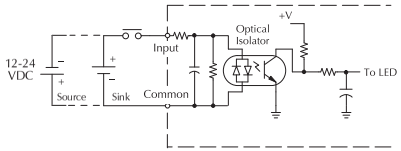

Equivalent Circuit, High Speed Input (X0-X2)

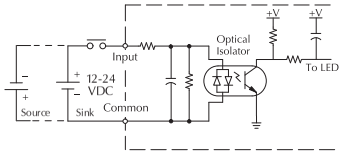

Equivalent Circuit, Standard Input (X3-X7)

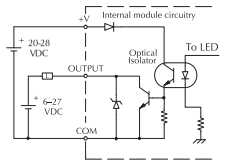

Equivalent Circuit, Standard Output (Y2-Y5)

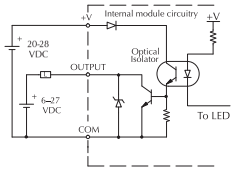

Equivalent Circuit, Pulse Output (Y0-Y1)

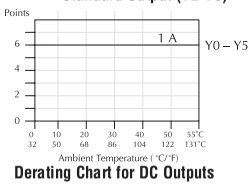

Derating Chart for DC Outputs

The eight DC input channels use terminals in the middle of the connector. Inputs are organized into two banks of four. Each bank has an isolated common terminal, and may be wired as either sinking or sourcing inputs. The wiring example above shows all commons connected together, but separate supplies and common circuits may be used. The equivalent circuit for standard inputs and the high-speed input circuit are shown above.

The six current sinking DC output channels use terminals on the right side of the connector. All outputs actually share the same electrical common. Note the requirement for external power on the end (right-most) terminal. The equivalent output circuit shows one channel of the bank of six.

D0-05DD-D General Specifications	
External Power Requirements	12 – 24 VDC, 20 W maximum,
Communication Port 1, 9600 baud (Fixed), 8 data bits, 1 stop bit, odd parity	K–Sequence (Slave), ***Direct***NET (Slave), Modbus (Slave)
Communication Port 2, 9600 baud (default), 8 data bits, 1 stop bit, odd parity	K–Sequence (Slave), ***Direct***NET (Master/Slave), Modbus (Master/Slave) Non-sequence/print
Programming cable type	D2–DSCBL
Operating Temperature	32 to 131° F (0 to 55 C)
Storage Temperature	–4 to 158° F (–20 to 70 C)
Relative Humidity	5 to 95% (non-condensing)
Environmental air	No corrosive gases permitted
Vibration	MIL STD 810C 514.2
Shock	MIL STD 810C 516.2
Noise Immunity	NEMA ICS3–304
Terminal Type	Removable
Wire Gauge	One 16AWG or two 18AWG, 24AWG minimum

DC Input Specifications		
Parameter	**High–Speed Inputs, X0 – X2**	**Standard DC Inputs X3 – X7**
Min. - Max. Voltage Range	10.8 – 26.4 VDC	10.8 – 26.4 VDC
Operating Voltage Range	12 – 24 VDC	12 – 24 VDC
Peak Voltage	30 VDC (5 kHz maximum frequency)	30 VDC
Minimum Pulse Width	100 µs	N/A
ON Voltage Level	>9.0 VDC	> 9.0 VDC
OFF Voltage Level	< 2.0 VDC	< 2.0 VDC
Max. Input Current	6mA @12VDC, 13mA @24VDC	4mA @12VDC, 8.5mA @24VDC
Input Impedance	1.8 kΩ @ 12 – 24 VDC	2.8 kΩ @ 12 – 24 VDC
Minimum ON Current	>5 mA	>4 mA
Maximum OFF Current	< 0.5 mA	<0.5 mA
OFF to ON Response	<100 µs	2 – 8 ms, 4 ms typical
ON to OFF Response	< 100 µs	2 – 8 ms, 4 ms typical
Status Indicators	Logic side	Logic side
Commons	4 channels / common x 2 banks	

DC Output Specifications		
Parameter	**Pulse Outputs, Y0 – Y1**	**Standard Outputs, Y3 – Y5**
Min. - Max. Voltage Range	5 – 30 VDC	5 – 30 VDC
Operating Voltage	6 – 27 VDC	6 – 27 VDC
Peak Voltage	< 50 VDC (7 kHz max. frequency)	< 50 VDC
On Voltage Drop	0.3 VDC @ 1 A	0.3 VDC @ 1 A
Max Current (resistive)	0.5 A/pt., 1A/pt. as standard pt.	1.0 A/point
Max leakage current	15 µA @ 30 VDC	15 µA @ 30 VDC
Max inrush current	2 A for 100 ms	2 A for 100 ms
External DC power required	20 - 28 VDC Max 150mA	20 - 28 VDC Max 150mA
OFF to ON Response	< 10 µs	< 10 µs
ON to OFF Response	< 30 µs	< 60 µs
Status Indicators	Logic Side	Logic Side
Commons	6 channels / common x 1 bank	
Fuses	None (external recommended)	

Glossary of Specification Terms

Discrete Input
One of eight input connections to the PLC which converts an electrical signal from a field device to a binary status (off or on), which is read by the internal CPU each PLC scan.

Discrete Output
One of six output connections from the PLC which converts an internal ladder program result (0 or 1) to turn On or Off an output switching device. This enables the program to turn on and off large field loads.

I/O Common
A connection in the input or output terminals which is shared by multiple I/O circuits. It usually is in the return path to the power supply of the I/O circuit.

Input Voltage Range
The operating voltage range of the input circuit.

Maximum Voltage
Maximum voltage allowed for the input circuit.

ON Voltage Level
The minimum voltage level at which the input point will turn ON.

OFF Voltage Level
The maximum voltage level at which the input point will turn OFF.

Input Impedance
Input impedance can be used to calculate input current for a particular operating voltage.

Input Current
Typical operating current for an active (ON) input.

Minimum ON Current
The minimum current for the input circuit to operate reliably in the ON state.

Maximum OFF Current
The maximum current for the input circuit to operate reliably in the OFF state.

OFF to ON Response
The time the module requires to process an OFF to ON state transition.

ON to OFF Response
The time the module requires to process an ON to OFF state transition.

Status Indicators
The LEDs that indicate the ON/OFF status of an input or output point. All LEDs on DL05 Micro PLCs are electrically located on the logic side of the input or output circuit.

CPU Specifications and Operation

CHAPTER 3

In This Chapter:

Introduction 3–2
CPU Specifications 3–3
CPU Hardware Setup 3–4
CPU Operation 3–11
I/O Response Time 3–15
CPU Scan Time Considerations 3–18
Memory Map 3–22
DL05 System V-memory 3–26
DL05 Aliases 3–29
X Input Bit Map 3–30
Y Output Bit Map 3–30
Control Relay Bit Map 3–31
Stage Control/Status Bit Map 3–32
Timer Status Bit Map 3–32
Counter Status Bit Map 3–33

Introduction

The Central Processing Unit (CPU) is the heart of the Micro PLC. Almost all PLC operations are controlled by the CPU, so it is important that it is set up correctly. This chapter provides the information needed to understand:

- Steps required to set up the CPU
- Operation of ladder programs
- Organization of Variable Memory

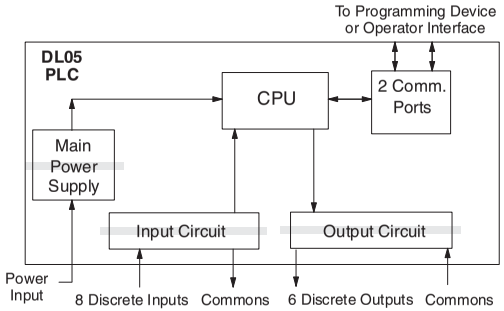

NOTE: The High-Speed I/O function (HSIO) consists of dedicated but configurable hardware in the DL05. It is not considered part of the CPU, because it does not execute the ladder program. For more on HSIO operation, see Appendix E.

DL05 CPU Features

The DL05 Micro PLC which has 6K words of memory comprised of 2K of ladder memory and 4K words of V-memory (data registers). Program storage is in the FLASH memory which is a part of the CPU board in the PLC. In addition, there is RAM with the CPU which will store system parameters, V-memory, and other data which is not in the application program. The RAM is backed up by a "super-capacitor", storing the data for several hours in the event of a power outage. The capacitor automatically charges during powered operation of the PLC.

The DL05 supports fixed I/O which includes eight discrete input points and six output points. If more than the fourteen fixed I/O points are needed, select an I/O module for your application from the DL05/06 Option Modules User Manual. This module will plug into the expansion slot.

Over 120 different instructions are available for program development as well as extensive internal diagnostics that can be monitored from the application program or from an operator interface. Chapters 5, 6, and 7 provide detailed descriptions of the instructions.

The DL05 provides two built-in RS232C communication ports, so you can easily connect a handheld programmer, operator interface, or a personal computer without needing any additional hardware.

CPU Specifications

Specifications	
Feature	**DL05**
Total Program memory (words)	6K
Ladder memory (words)	2048
Total V-memory (words)	4096
User V-memory (words)	3968
Non-volatile V-Memory (words)	128
Contact execution (boolean)	2.0us
Typical scan (1k boolean)	2.7–3.2ms
RLL Ladder Style Programming	Yes
RLL and RLL^{PLUS} Programming	Yes
Run Time Edits	Yes
Supports Overrides	Yes
Scan	Variable / fixed
Handheld programmer	Yes
*Direct*SOFT 5 programming for Windows.	Yes
Built-in communication ports (RS232C)	Yes
FLASH Memory	Standard on CPU
Local Discrete I/O points available	14
Local Analog input / output channels maximum	None
High-Speed I/O (quad., pulse out, interrupt, pulse catch, etc.)	Yes, 2
I/O Point Density	8 inputs, 6 outputs
Number of instructions available (see Chapter 5 for details)	129
Control relays	512
Special relays (system defined)	512
Stages in RLL^{PLUS}	256
Timers	128
Counters	128
Immediate I/O	Yes
Interrupt input (external/timed)	Yes
Subroutines	Yes
For/Next Loops	Yes
Math	Integer
Drum Sequencer Instruction	Yes
Time of Day Clock/Calendar	Only with the optional Memory Cartridge
Internal diagnostics	Yes
Password security	Yes
System error log	No
User error log	No
Battery backup	No (built–in super–cap) Yes, with memory cartridge

CPU Hardware Setup

Communication Port Pinout Diagrams

Cables are available that allow you to quickly and easily connect a Handheld Programmer or a personal computer to the DL05 PLCs. However, if you need to build your own cables, use the pinout information shown below. The DL05 PLCs require an RJ-12 phone plug to fit the built-in jacks.

The Micro PLC has two built-in RS232C communication ports. Port 1 is generally used for connecting to a D2-HPP, a PC with ***Direct***SOFT 5, operator interface, Modbus slave, or a ***Direct***NET slave. The baud rate is fixed at 9600 baud for port 1. Port 2 can be used to connect to a D2-HPP, ***Direct***SOFT 5, operator interface, Modbus master/slave, or a ***Direct***NET master/slave. Port 2 has a range of speeds from 300 baud to 38.4K baud.

NOTE: The 5V pins are rated at 200mA maximum, primarily for use with some operator interface units.

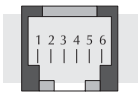

6-pin Female Modular Connector

Port 1 Pin Descriptions		
1	0V	Power (–) connection (GND)
2	5V	Power (+) connection
3	RXD	Receive Data (RS232C)
4	TXD	Transmit Data (RS232C
5	5V	Power (+) conection
6	0V	Power (–) connection (GND)

Port 2 Pin Descriptions		
1	0V	Power (–) connection (GND)
2	5V	Power (+) connection
3	RXD	Receive Data (RS232C)
4	TXD	Transmit Data (RS232C
5	RTS	Request to Send
6	0V	Power (–) connection (GND)

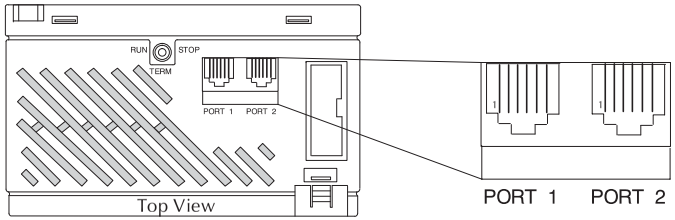

Communication Port 1
Com 1 Connects to HPP, ***Direct***SOFT, operator interfaces, etc. 6-pin, RS232C 9600 Baud (Fixed) Parity - odd (default) Station address 1 (fixed) 8 data bits 1 start, 1 stop bit Asynchronous, Half-duplex, DTE Protocol: (Auto-Select) K sequence (Slave only) ***Direct***NET (Slave only) Modbus (Slave only)

Communication Port 2
Com 2 Connects to HPP, ***Direct***SOFT, operator interfaces, etc. 6-pin, RS232C Communication speed (baud) 300, 600, 1200, 2400, 4800, 9600, 19200, 38400 Parity - odd (default), even, none Station address 1 (default) 8 data bits 1 start, 1 stop bit Asynchronous, Half-duplex, DTE Protocol: (Auto-Select) K sequence (Slave only) ***Direct***NET (Master/Slave) Modbus (Master/Slave) Non-sequence/Print

Connecting the Programming Devices

If you're using a Personal Computer with the ***Direct***SOFT 5 programming package, you can connect the computer to either of the DL05's programming ports. For an engineering office environment (typical during program development), this is the preferred method of programming.

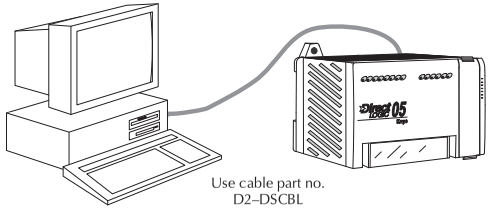

The Handheld programmer is connected to the CPU with a handheld programmer cable. This device can be used for maintaining existing installations or making small program changes whenever a PC is not available. The handheld programmer is shipped with a cable, which is approximately 6.5 feet (200 cm) long.

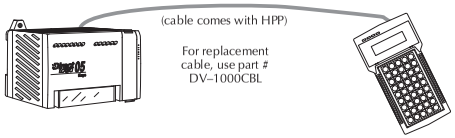

CPU Setup Information

Even if you have years of experience using PLCs, there are a few things you need to do before you can start entering programs. This section includes some basic things, such as changing the CPU mode, but it also includes some things that you may never have to use. Here's a brief list of the items that are discussed. Selecting and Changing the CPU Modes

- Using Auxiliary Functions
- Clearing the program (and other memory areas)
- How to initialize system memory
- Setting retentive memory ranges

The following paragraphs provide the setup information necessary to get the CPU ready for programming. They include setup instructions for either type of programming device you are using. The D2–HPP Handheld Programmer Manual provides the Handheld keystrokes required to perform all of these operations. The ***Direct***SOFT 5 Programming Software User Manual provides a description of the menus and keystrokes required to perform the setup procedures.

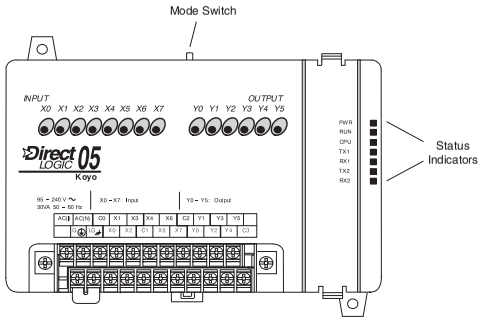

Status Indicators

The status indicator LEDs on the CPU front panels have specific functions which can help in programming and troubleshooting.

Indicator	Status	Meaning
PWR	ON	Power good
	OFF	Power failure
RUN	ON	CPU is in Run Mode
	OFF	CPU is in Stop or program Mode
	Blinking	CPU is in upgrade Mode
CPU	ON	CPU self diagnostics error
	OFF	CPU self diagnostics good
TX1	ON	Data is being transmitted by the CPU - Port 1
	OFF	No data is being transmitted by the CPU - Port 1
RX1	ON	Data is being received by the CPU - Port 1
	OFF	No data is being received by the CPU - Port 1
TX2	ON	Data is being transmitted by the CPU - Port 2
	OFF	No data is being transmitted by the CPU - Port 2
RX2	ON	Data is being received by the CPU - Port 2
	OFF	No data is being received by the CPU - Port 2

Mode Switch Functions

The mode switch on the DL05 PLC provides positions for enabling and disabling program changes in the CPU. Unless the mode switch is in the TERM position, RUN and STOP mode changes will not be allowed by any interface device, (handheld programmer, *Direct*SOFT 5 programing package or operator interface). Programs may be viewed or monitored but no changes may be made. If the switch is in the TERM position and no program password is in effect, all operating modes as well as program access will be allowed through the connected programming or monitoring device.

NOTE: If the DL05 is switched to the RUN Mode without a program in the PLC, the PLC will produce a FATAL ERROR which can be cleared by cycling power to the PLC.

Changing Modes in the DL05 PLC

Modeswitch Position	CPU Action
RUN (Run Program)	CPU is forced into the RUN mode if no errors are encountered. No changes are allowed by the attached programming/monitoring device.
TERM (Terminal) RUN,	PROGRAM and the TEST modes are available. Mode and program changes are allowed by the programming/monitoring device.
STOP	CPU is forced into the STOP mode. No changes are allowed by the programming/monitoring device.

There are two ways to change the CPU mode. You can use the CPU mode switch to select the operating mode, or you can place the mode switch in the TERM position and use a programming device to change operating modes. With the switch in this position, the CPU can be changed between Run and Program modes. You can use either *Direct*SOFT 5 or the Handheld Programmer to change the CPU mode of operation. With *Direct*SOFT 5 use the PLC menu option **PLC > Mode** or use the **Mode** button located on the Online toolbar. With the Handheld Programmer, you use the MODE key.

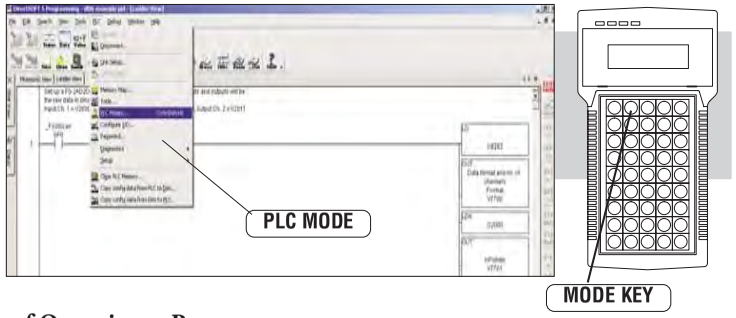

Mode of Operation at Power-up

The DL05 CPU will normally power-up in the mode that it was in just prior to the power interruption. For example, if the CPU was in Program Mode when the power was disconnected, the CPU will power-up in Program Mode (see warning note below).

WARNING: Once the super capacitor has discharged, the system may not power-up in the mode it was in when this occurred. There is no way to determine which mode will be entered as the startup mode. However, the PLC can power-up in either Run or Program Mode if the mode switch is in the TERM position. Failure to adhere to this warning greatly increases the risk of unexpected equipment startup.

The mode which the CPU will power-up in is also determined by the state of B7633.13. If the bit is set and the Mode Switch is in the TERM position, then the CPU will power-up in the state it was in at power-down.

Auxiliary Functions

Many CPU setup tasks involve the use of Auxiliary (AUX) Functions. The AUX Functions perform many different operations, ranging from clearing ladder memory, displaying the scan time, copying programs to EEPROM in the handheld programmer, etc. They are divided into categories that affect different system parameters. Appendix A provides a description of the AUX functions.

You can access the AUX Functions from *Direct*SOFT 5. or from the D2–HPP Handheld Programmer. The manuals for those products provide step-by-step procedures for accessing the AUX Functions. Some of these AUX Functions are designed specifically for the Handheld Programmer setup, so they will not be needed (or available) with the *Direct*SOFT 5 package. The following table shows a list of the Auxiliary functions for the Handheld Programmer.

AUX 2* — RLL Operations		5B	HSIO Configuration
21	Check Program	5D	Scan Control Setup
22	Change Reference	**AUX 6* — Handheld Programmer Configuration**	
23	Clear Ladder Range	61	Show Revision Numbers
24	Clear All Ladders	62	Beeper On / Off
AUX 3* — V-Memory Operations		65	Run Self Diagnostics
31	Clear V-Memory	**AUX 7* — EEPROM Operations**	
AUX 4* — I/O Configuration		71	Copy CPU memory to HPP EEPROM
41	Show I/O Configuration	72	Write HPP EEPROM to CPU
AUX 5* — CPU Configuration		73	Compare CPU to HPP EEPROM
51	Modify Program Name	74	Blank Check (HPP EEPROM)
53	Display Scan Time	75	Erase HPP EEPROM
54	Initialize Scratchpad	76	Show EEPROM Type (CPU and HPP)
55	Set Watchdog Timer	**AUX 8* — Password Operations**	
56	Set Communication Port 2	81	Modify Password
57	Set Retentive Ranges	82	Unlock CPU
58	Test Operations	83	Lock CPU
59	Override Setup		

Clearing an Existing Program

Before you enter a new program, be sure to always clear ladder memory. You can use AUX Function 24 to clear the complete program.

You can also use other AUX functions to clear other memory areas.

- AUX 23 — Clear Ladder Range
- AUX 24 — Clear all Ladders
- AUX 31 — Clear V-Memory

Initializing System Memory

The DL05 Micro PLC maintain system parameters in a memory area often referred to as the "scratchpad". In some cases, you may make changes to the system setup that will be stored in system memory. For example, if you specify a range of Control Relays (CRs) as retentive, these changes are stored in system memory. AUX 54 resets the system memory to the default values.

WARNING: You may never have to use this feature unless you want to clear any setup information that is stored in system memory. Usually, you'll only need to initialize the system memory if you are changing programs and the old program required a special system setup. You can usually load in new programs without ever initializing system memory.
Remember, this AUX function will reset all system memory. If you have set special parameters such as retentive ranges, etc. they will be erased when AUX 54 is used. Make sure you that you have considered all ramifications of this operation before you select it.

Setting Retentive Memory Ranges

The DL05 PLCs provide certain ranges of retentive memory by default. The default ranges are suitable for many applications, but you can change them if your application requires additional retentive ranges or no retentive ranges at all. Appendix F has more information pertaining to the different types of memory. The default settings are:

Memory Area	DL05	
	Default Range	Available Range
Control Relays	C400 – C777	C0 – C777
V-memory	V1400 – V7777	V0 – V7777
Timers	None by default	T0 – T177
Counters	CT0 – CT177	CT0 – CT177
Stages	None by default	S0 – S377

You can use AUX 57 to set the retentive ranges. Appendix A contains detailed information about auxiliary functions. You can also set the retentive ranges by using Setup in *Direct*SOFT 5, **PLC > Setup > Retentive Ranges**.

WARNING: The DL05 PLCs do not have battery back-up (unless the memory cartridge, D0–01MC, is installed) The super capacitor will retain the values in the event of a power loss, but only for a short period of time, depending on conditions.

Using a Password

The DL05 PLCs allow you to use a password to help minimize the risk of unauthorized program and/or data changes. Once you enter a password you can "lock" the PLC against access. Once the CPU is locked you must enter the password before you can use a programming device to change any system parameters.

You can select an 8-digit numeric password. The Micro PLCs are shipped from the factory with a password of 00000000. All zeros removes the password protection. If a password has been entered into the CPU you cannot just enter all zeros to remove it. Once you enter the correct password, you can change the password to all zeros to remove the password protection.

WARNING: Make sure you remember your password. If you forget your password you will not be able to access the CPU. The Micro PLC must be returned to the factory to have the password (along with the ladder project) cleared from memory. It is the policy of AutomationDirect to require the memory of the PLC to be cleared along with the password.

You can use the D2–HPP Handheld Programmer or *Direct*SOFT 5. to enter a password. The following diagram shows how you can enter a password with the Handheld Programmer.

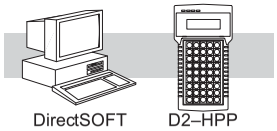

Select AUX 81

CLR CLR I 8 B 1 AUX ENT

PASSWORD
00000000

Enter the new 8-digit password

X X • • • X ENT

PASSWORD
XXXXXXXX

Press CLR to clear the display

There are three ways to lock the CPU once the password has been entered.

1. If the CPU power is disconnected, the CPU will be automatically locked against access.
2. If you enter the password with *Direct*SOFT 5, the CPU will be automatically locked against access when you exit *Direct*SOFT 5.
3. Use AUX 83 to lock the CPU.

When you use *Direct*SOFT 5, you will be prompted for a password if the CPU has been locked. If you use the Handheld Programmer, you have to use AUX 82 to unlock the CPU. Once you enter AUX 82, you will be prompted to enter the password.

CPU Operation

Achieving the proper control for your equipment or process requires a good understanding of how DL05 CPUs control all aspects of system operation. There are four main areas to understand before you create your application program:

- CPU Operating System — the CPU manages all aspects of system control. A quick overview of all the steps is provided in the next section.
- CPU Operating Modes — The two primary modes of operation are Program Mode and Run Mode.
- CPU Timing — The two important areas we discuss are the I/O response time and the CPU scan time.
- CPU Memory Map — DL05 CPUs offer a wide variety of resources, such as timers, counters, inputs, etc. The memory map section shows the organization and availability of these data types.

CPU Operating System

At powerup, the CPU initializes the internal electronic hardware. Memory initialization starts with examining the retentive memory settings. In general, the content of retentive memory is preserved, and non-retentive memory is initialized to zero (unless otherwise specified).

After the one-time powerup tasks, the CPU begins the cyclical scan activity. The flowchart to the right shows how the tasks differ, based on the CPU mode and the existence of any errors. The "scan time" is defined as the average time around the task loop. Note that the CPU is always reading the inputs, even during program mode. This allows programming tools to monitor input status at any time.

The outputs are only updated in Run mode. In program mode, they are in the off state.

Error detection has two levels. Non-fatal errors are reported, but the CPU remains in its current mode. If a fatal error occurs, the CPU is forced into program mode and the outputs go off.

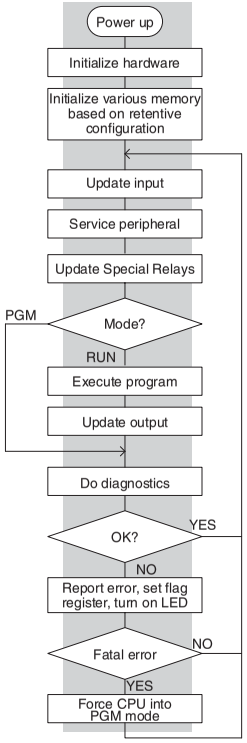

Program Mode

In Program Mode, the CPU does not execute the application program or update the output points. The primary use for Program Mode is to enter or change an application program. You also use program mode to set up the CPU parameters, such as HSIO features, retentive memory areas, etc.

You can use a programming device, such as a PC with *Direct*SOFT 5 Programming Software or the D2–HPP Handheld programmer to place the CPU in Program Mode.

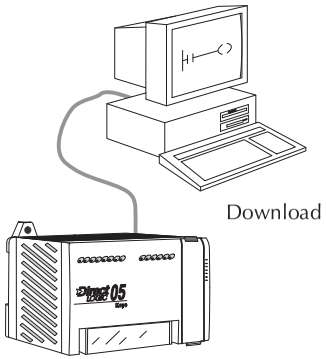

Run Mode

In Run Mode, the CPU executes the application program and updates the I/O system. You can perform many operations during Run Mode. Some of these include:

- Monitor and change I/O point status
- Update timer/counter preset values
- Update Variable memory locations

Run Mode operation can be divided into several key areas. For the vast majority of applications, some of these execution segments are more important than others. For example, you need to understand how the CPU updates the I/O points, handles forcing operations, and solves the application program. The remaining segments are not that important for most applications.

You can use *Direct*SOFT 5 or the D2–HPP Handheld Programmer to place the CPU in Run Mode.

You can also edit the program during Run Mode. The Run Mode Edits are not "bumpless" to the outputs. Instead, the CPU maintains the outputs in their last state while it accepts the new program information. If an error is found in the new program, then the CPU will turn all the outputs off and enter the Program Mode. This feature is discussed in more detail in Chapter 9.

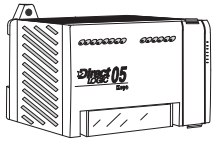

Normal Run mode scan

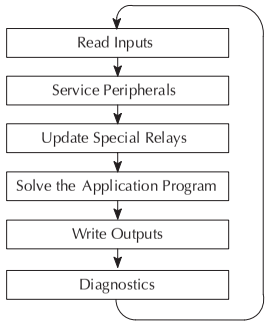

WARNING: Only authorized personnel fully familiar with all aspects of the application should make changes to the program. Changes during Run Mode become effective immediately. Make sure you thoroughly consider the impact of any changes to minimize the risk of personal injury or damage to equipment.

Read Inputs

The CPU reads the status of all inputs, then stores it in the image register. Input image register locations are designated with an X followed by a memory location. Image register data is used by the CPU when it solves the application program.

Of course, an input may change after the CPU has just read the inputs. Generally, the CPU scan time is measured in milliseconds. If you have an application that cannot wait until the next I/O update, you can use Immediate Instructions. These do not use the status of the input image register to solve the application program. The Immediate instructions immediately read the input status directly from the I/O modules. However, this lengthens the program scan since the CPU has to read the I/O point status again. A complete list of the Immediate instructions is included in Chapter 5.

Service Peripherals and Force I/O

After the CPU reads the inputs from the input modules, it reads any attached peripheral devices. This is primarily a communications service for any attached devices. For example, it would read a programming device to see if any input, output, or other memory type status needs to be modified. There are two basic types of forcing available with the DL05 CPUs.

- Forcing from a peripheral – not a permanent force, good only for one scan
- Bit Override – holds the I/O point (or other bit) in the current state. Valid bits are X, Y, C, T, CT, and S. (These memory types are discussed in more detail later in this chapter).

Regular Forcing — This type of forcing can temporarily change the status of a discrete bit. For example, you may want to force an input on, even though it is really off. This allows you to change the point status that was stored in the image register. This value will be valid until the image register location is written to during the next scan. This is primarily useful during testing situations when you need to force a bit on to trigger another event.

Bit Override — Bit override can be enabled on a point-by-point basis by using AUX 59 from the Handheld Programmer or, by using the Data View option within *Direct*SOFT 5. Bit override basically disables any changes to the discrete point by the CPU. For example, if you enable bit override for X1, and X1 is off at the time, then the CPU will not change the state of X1. This means that even if X1 comes on, the CPU will not acknowledge the change. So, if you used X1 in the program, it would always be evaluated as "off" in this case. Of course, if X1 was on when the bit override was enabled, then X1 would always be evaluated as "on".

There is an advantage available when you use the bit override feature. The regular forcing is not disabled because the bit override is enabled. For example, if you enabled the Bit Override for Y0 and it was off at the time, then the CPU would not change the state of Y0. However, you can still use a programming device to change the status. Now, if you use the programming device to force Y0 on, it will remain on and the CPU will not change the state of Y0. If you then force Y0 off, the CPU will maintain Y0 as off. The CPU will never update the point with the results from the application program or from the I/O update until the bit override is removed. The following diagram shows a brief overview of the bit override feature. Notice the CPU does not update the Image Register when bit override is enabled.

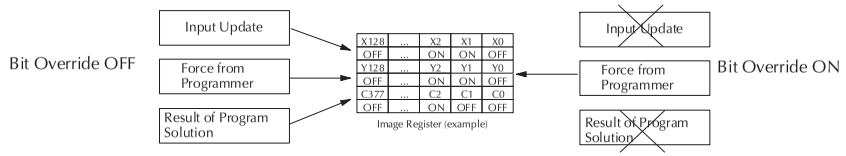

WARNING: Only authorized personnel fully familiar with all aspects of the application should make changes to the program. Make sure you thoroughly consider the impact of any changes to minimize the risk of personal injury or damage to equipment.

Update Special Relays and Special Registers

There are dedicated V-memory locations that contain Special Relays and other dedicated register information. This portion of the execution cycle makes sure these locations get updated on every scan. Also, there are several different Special Relays, such as diagnostic relays, etc., that are also updated during this segment.

Solve Application Program

The CPU evaluates each instruction in the application program during this segment of the scan cycle. The instructions define the relationship between the input conditions and the desired output response. The CPU uses the output image register area to store the status of the desired action for the outputs. Output image register locations are designated with a Y followed by a memory location. The actual outputs are updated during the write outputs segment of the scan cycle. There are immediate output instructions available that will update the output points immediately instead of waiting until the write output segment. A complete list of the Immediate instructions is provided in Chapter 5.

The internal control relays (C), the stages (S), and the variable memory (V) are also updated in this segment.

You may recall that you can force various types of points in the system. (This was discussed earlier in this chapter.) If any I/O points or memory data have been forced, the output image register also contains this information.

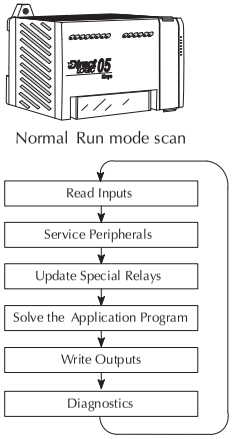

Write Outputs

Once the application program has solved the instruction logic and constructed the output image register, the CPU writes the contents of the output image register to the corresponding output points. Remember, the CPU also made sure that any forcing operation changes were stored in the output image register, so the forced points get updated with the status specified earlier.

Diagnostics

During this part of the scan, the CPU performs all system diagnostics and other tasks such as calculating the scan time and resetting the watchdog timer. There are many different error conditions that are automatically detected and reported by the DL05 PLCs. Appendix B contains a listing of the various error codes.

Probably one of the more important things that occurs during this segment is the scan time calculation and watchdog timer control. The DL05 CPU has a "watchdog" timer that stores the maximum time allowed for the CPU to complete the solve application segment of the scan cycle. If this time is exceeded the CPU will enter the Program Mode and turn off all outputs. The default value set from the factory is 200 ms. An error is automatically reported. For example, the Handheld Programmer would display the following message "E003 S/W TIMEOUT" when the scan overrun occurs.

You can use AUX 53 to view the minimum, maximum, and current scan time. Use AUX 55 to increase or decrease the watchdog timer value.

I/O Response Time

Is Timing Important for Your Application?

I/O response time is the amount of time required for the control system to sense a change in an input point and update a corresponding output point. In the majority of applications, the CPU performs this task in such a short period of time that you may never have to concern yourself with the aspects of system timing. However, some applications do require extremely fast update times. In these cases, you may need to know how to determine the amount of time spent during the various segments of operation.

There are four things that can affect the I/O response time.

- The point in the scan cycle when the field input changes states
- Input Off to On delay time
- CPU scan time
- Output Off to On delay time

The next paragraphs show how these items interact to affect the response time.

Normal Minimum I/O Response

The I/O response time is shortest when the input changes just before the Read Inputs portion of the execution cycle. In this case the input status is read, the application program is solved, and the output point gets updated. The following diagram shows an example of the timing for this situation.

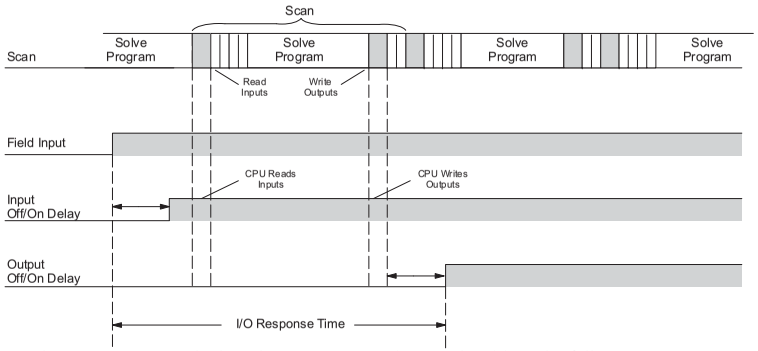

In this case, you can calculate the response time by simply adding the following items:

Input Delay + Scan Time + Output Delay = Response Time

Normal Maximum I/O Response

The I/O response time is longest when the input changes just after the Read Inputs portion of the execution cycle. In this case the new input status is not read until the following scan.

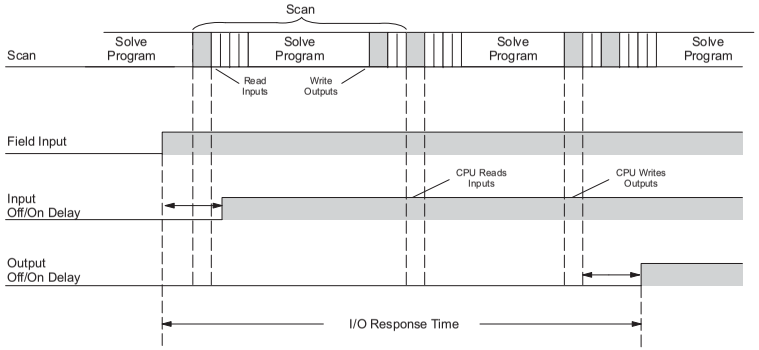

The following diagram shows an example of the timing for this situation.

In this case, you can calculate the response time by simply adding the following items:

Input Delay +(2 x Scan Time) + Output Delay = Response Time

Improving Response Time

There are a few things you can do the help improve throughput.

- You can choose instructions with faster execution times
- You can use immediate I/O instructions (which update the I/O points during the program execution)
- You can use the HSIO Mode 50 Pulse Catch features designed to operate in high-speed environments. See Appendix E for details on using this feature.
- Change Mode 60 filter to 0 msec for X0, X1, X2 and X3.

Of these four things the Immediate I/O instructions are probably the most important and most useful. The following example shows how an immediate input instruction and immediate output instruction would affect the response time.

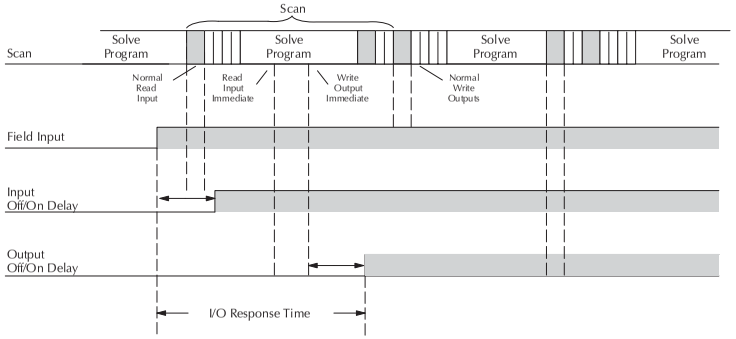

In this case, you can calculate the response time by simply adding the following items.

Input Delay + Instruction Execution Time + Output Delay = Response Time

The instruction execution time would be calculated by adding the time for the immediate input instruction, the immediate output instruction, and any other instructions in between the two.

NOTE: Even though the immediate instruction reads the most current status from I/O, it only uses the results to solve that one instruction. It does not use the new status to update the image register. Therefore, any regular instructions that follow will still use the image register values. Any immediate instructions that follow will access the I/O again to update the status.

CPU Scan Time Considerations

The scan time covers all the cyclical tasks that are performed by the operating system. You can use *Direct*SOFT 5 or the Handheld Programmer to display the minimum, maximum, and current scan times that have occurred since the previous Program Mode to Run Mode transition. This information can be very important when evaluating the performance of a system. As we've shown previously there are several segments that make up the scan cycle. Each of these segments requires a certain amount of time to complete. Of all the segments, the following are the most important.

- Input Update
- Peripheral Service
- Program Execution
- Output Update
- Timed Interrupt Execution

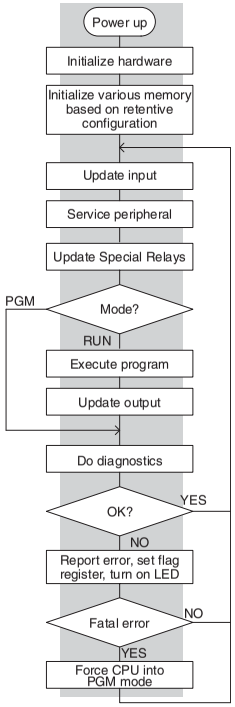

The only one you really have the most control over is the amount of time it takes to execute the application program. This is because different instructions take different amounts of time to execute. So, if you think you need a faster scan, then you can try to choose faster instructions.

Your choice of I/O type and peripheral devices can also affect the scan time. However, these things are usually dictated by the application.

The following paragraphs provide some general information on how much time some of the segments can require.

Reading Inputs

The time required during each scan to read the input status is 40 µs. Don't confuse this with the I/O response time that was discussed earlier.

Writing Outputs

The time required to write the output status is 629 µs. Don't confuse this with the I/O response time that was discussed earlier.

Application Program Execution

The CPU processes the program from address 0 to the END instruction. The CPU executes the program left to right and top to bottom. As each rung is evaluated the appropriate image register or memory location is updated. The time required to solve the application program depends on the type and number of instructions used, and the amount of execution overhead.

Just add the execution times for all the instructions in your program to determine to total execution time. Appendix C provides a complete list of the instruction execution times for the DL05 Micro PLC. For example, the execution time for running the program shown below is calculated as follows:

Instruction	Time
STR X0	2.0 µs
OR C0	1.6 µs
ANDN X1	1.6 µs
OUT Y0	6.8 µs
STRN C100	2.3 µs
LD K10	42.7 µs
STRN C101	2.3 µs
OUT V2002	16.6 µs
STRN C102	2.3 µs
LD K50	42.7 µs
STRN C103	2.3 µs
OUT V2006	16.6 µs
STR X5	2.0 µs
ANDN X10	1.6 µs
OUT Y3	6.8 µs
END	24.0 µs
SUBTOTAL	174.2 µs

Overhead	DL05
Minimum	0.66 µs
Maximum	2.5 µs

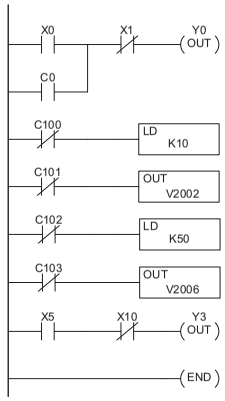

TOTAL TIME = (Program execution time + Overhead) x 1.1

The program above takes only 174.2 µs to execute during each scan. The DL05 spends 0.1 ms, on internal timed interrupt management, for every 1.0 ms of instruction time. The total scan time is calculated by adding the program execution time to the overhead (shown above) and multiplying the result (ms) by 1.1. "Overhead" includes all other housekeeping and diagnostic tasks. The scan time will vary slightly from one scan to the next, because of fluctuation in overhead tasks.

Program Control Instructions — the DL05 PLCs have an interrupt routine feature that changes the way a program executes. Since this instruction interrupts normal program flow, it will have an effect on the program execution time. For example, a timed interrupt routine with a 10.0 ms period interrupts the main program execution (before the END statement) every 10.0 ms, so the CPU can execute the interrupt routine. Chapter 5 provides detailed information on interrupts.

PLC Numbering Systems

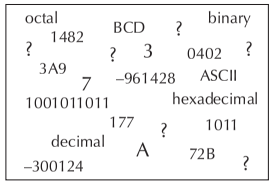

If you are a new PLC user or are using ***AutomationDirect*** PLCs for the first time, please take a moment to study how our PLCs use numbers. You'll find that each PLC manufacturer has their own conventions on the use of numbers in their PLCs. We want to take just a moment to familiarize you with how numbers are used in ***AutomationDirect*** PLCs. The information you learn here applies to all of our PLCs.

As any good computer does, PLCs store and manipulate numbers in binary form: just ones and zeros. So why do we have to deal with numbers in so many different forms? Numbers have meaning, and some representations are more convenient than others for particular purposes. Sometimes we use numbers to represent a size or amount of something. Other numbers refer to locations or addresses, or to time. In science we attach engineering units to numbers to give a particular meaning (see Appendix I for numbering system details).

PLC Resources

PLCs offer a fixed amount of resources, depending on the model and configuration. We use the word "resources" to include variable memory (V-memory), I/O points, timers, counters, etc. Most modular PLCs allow you to add I/O points in groups of eight. In fact, all the resources of our PLCs are counted in octal. It's easier for computers to count in groups of eight than ten, because eight is an even power of 2.

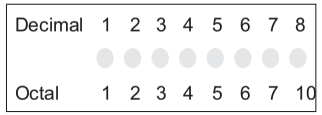

Octal means simply counting in groups of eight things at a time. In the figure to the right, there are eight circles. The quantity in decimal is "8", but in octal it is "10" (8 and 9 are not valid in octal). In octal, "10" means 1 group of 8 plus 0 (no individuals).

In the figure below, we have two groups of eight circles. Counting in octal we have "20" items, meaning 2 groups of eight, plus 0 individuals Don't say "twenty", say "two–zero octal". This makes a clear distinction between number systems.

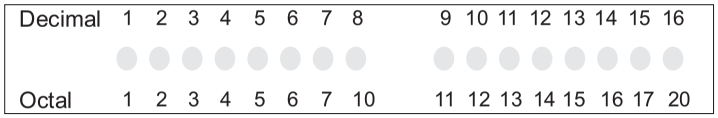

After counting PLC resources, it is time to access PLC resources (there is a difference). The CPU instruction set accesses resources of the PLC using octal addresses. Octal addresses are the same as octal quantities, except they start counting at zero. The number zero is significant to a computer, so we don't skip it.

Our circles are in an array of square containers to the right. To access a resource, our PLC instruction will address its location using the octal references shown. If these were counters, "CT14" would access the black circle location.

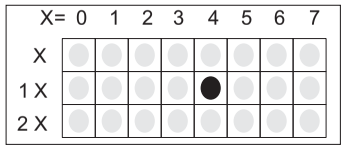

V–memory

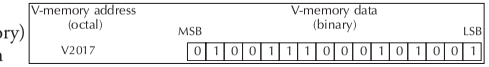

Variable memory (called V-memory) stores data for the ladder program and for configuration settings. V-memory locations and V-memory addresses are the same thing, and are numbered in octal. For example, V2073 is a valid location, while V1983 is not valid ("9" and "8" are not valid octal digits).

Each V-memory location is one data word wide, meaning 16 bits. For configuration registers, our manuals will show each bit of a V-memory word. The least significant bit (LSB) will be on the right, and the most significant bit (MSB) on the left. We use the word "significant", referring to the relative binary weighting of the bits.

V-memory data is 16-bit binary, but we rarely program the data registers one bit at a time. We use instructions or viewing tools that let us work with decimal, octal, and hexadecimal numbers. All these are converted and stored as binary for us.

A frequently-asked question is "How do I tell if a number is octal, BCD, or hex"? The answer is that we usually cannot tell just by looking at the data... but it does not really matter. What matters is: the source or mechanism which writes data into a V-memory location and the thing which later reads it must both use the same data type (i.e., octal, hex, binary, or whatever). The V-memory location is just a storage box... that's all. It does not convert or move the data on its own.

Binary-Coded Decimal Numbers

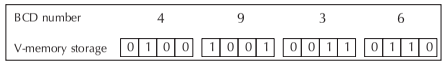

Since humans naturally count in decimal (10 fingers, 10 toes), we prefer to enter and view PLC data in decimal as well. However, computers are more efficient in using pure binary numbers. A compromise solution between the two is Binary-Coded Decimal (BCD) representation. A BCD digit ranges from 0 to 9, and is stored as four binary bits (a nibble). This permits each V-memory location to store four BCD digits, with a range of decimal numbers from 0000 to 9999.

In a pure binary sense, a 16-bit word can represent numbers from 0 to 65535. In storing BCD numbers, the range is reduced to only 0 to 9999. Many math instructions use Binary-Coded Decimal (BCD) data, and ***Direct***SOFT 5 and the handheld programmer allow us to enter and view data in BCD.

Hexadecimal Numbers

Hexadecimal numbers are similar to BCD numbers, except they utilize all possible binary values in each 4-bit digit. They are base-16 numbers so we need 16 different digits. To extend our decimal digits 0 through 9, we use A through F as shown.

Decimal	0	1	2	3	4	5	6	7	8	9	10	11	12	13	14	15
Hexadecimal	0	1	2	3	4	5	6	7	8	9	A	B	C	D	E	F

A 4-digit hexadecimal number can represent all 65536 values in a V-memory word. The range is from 0000 to FFFF (hex). PLCs often need this full range for sensor data, etc. Hexadecimal is just a convenient way for humans to view full binary data.

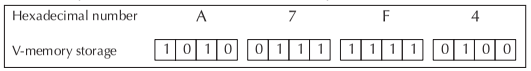

Memory Map

With any PLC system, you generally have many different types of information to process. This includes input device status, output device status, various timing elements, parts counts, etc. It is important to understand how the system represents and stores the various types of data. For example, you need to know how the system identifies input points, output points, data words, etc. The following paragraphs discuss the various memory types used in DL05 Micro PLCs. A memory map overview for the CPU follows the memory descriptions.

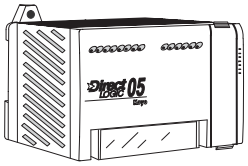

Octal Numbering System

All memory locations and resources are numbered in Octal (base 8). For example, the diagram shows how the octal numbering system works for the discrete input points. Notice the octal system does not contain any numbers with the digits 8 or 9.

X0	X1	X2	X3	X4	X5	X6	X7

Discrete and Word Locations

As you examine the different memory types, you'll notice two types of memory in the DL05, discrete and word memory. Discrete memory is one bit that can be either a 1 or a 0. Word memory is referred to as V-memory (variable) and is a 16-bit location normally used to manipulate data/numbers, store data/numbers, etc.

Discrete – On or Off, 1 bit

X0

Word Locations – 16 bits

0	1	0	1	0	0	0	0	0	0	1	0	0	1	0	1

Some information is automatically stored in V-memory. For example, the timer current values are stored in V-memory.

V-memory Locations for Discrete Memory Areas

The discrete memory area is for inputs, outputs, control relays, special relays, stages, timer status bits and counter status bits. However, you can also access the bit data types as a V-memory word. Each V-memory location contains 16 consecutive discrete locations. For example, the following diagram shows how the X input points are mapped into V-memory locations.

8 Discrete (X) Input Points

								X7	X6	X5	X4	X3	X2	X1	X0	
Bit #	15	14	13	12	11	10	9	8	7	6	5	4	3	2	1	0	V40400

These discrete memory areas and their corresponding V-memory ranges are listed in the memory area table for DL05 Micro PLCs on the following pages.

Input Points (X Data Type)

The discrete input points are noted by an X data type. There are 8 discrete input points and 256 discrete input addresses available with DL05 CPUs. In this example, the output point Y0 will be turned on when input X0 energizes.

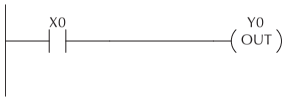

Output Points (Y Data Type)

The discrete output points are noted by a Y data type. There are 6 discrete outputs and 256 discrete output addresses available with DL05 CPUs. In this example, output point Y1 will be turned on when input X1 energizes.

Control Relays (C Data Type)

Control relays are discrete bits normally used to control the user program. The control relays do not represent a real world device, that is, they cannot be physically tied to switches, output coils, etc. They are internal to the CPU. Because of this, control relays can be programmed as discrete inputs or discrete outputs. These locations are used in programming the discrete memory locations (C) or the corresponding word location which contains 16 consecutive discrete locations.

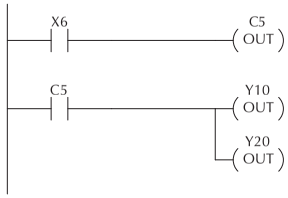

In this example, memory location C5 will energize when input X6 turns on. The second rung shows a simple example of how to use a control relay as an input.

Timers and Timer Status Bits (T Data Type)

Timer status bits reflect the relationship between the current value and the preset value of a specified timer. The timer status bit will be on when the current value is equal or greater than the preset value of a corresponding timer.

When input X0 turns on, timer T1 will start. When the timer reaches the preset of 3 seconds (K30) timer status contact T1 turns on. When T1 turns on, output Y12 turns on. Turning off X0 resets the timer.

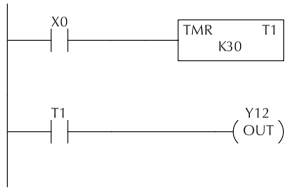

Timer Current Values (V Data Type)

As mentioned earlier, some information is automatically stored in V-memory. This is true for the current values associated with timers. For example, V0 holds the current value for Timer 0, V1 holds the current value for Timer 1, etc.

The primary reason for this is programming flexibility. The example shows how you can use relational contacts to monitor several time intervals from a single timer.

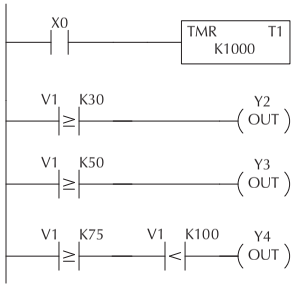

Counters and Counter Status Bits (CT Data type)

Counter status bits that reflect the relationship between the current value and the preset value of a specified counter. The counter status bit will be on when the current value is equal to or greater than the preset value of a corresponding counter.

Each time contact X0 transitions from off to on, the counter increments by one. (If X1 comes on, the counter is reset to zero.) When the counter reaches the preset of 10 counts (K of 10) counter status contact CT3 turns on. When CT3 turns on, output Y2 turns on.

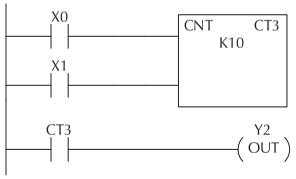

Counter Current Values (V Data Type)

Just like the timers, the counter current values are also automatically stored in V-memory. For example, V1000 holds the current value for Counter CT0, V1001 holds the current value for Counter CT1, etc.

The primary reason for this is programming flexibility. The example shows how you can use relational contacts to monitor the counter values.

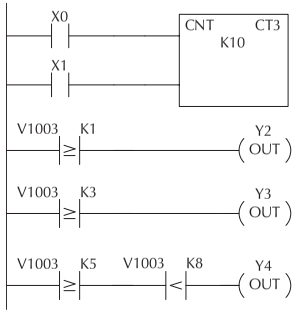

Word Memory (V Data Type)

Word memory is referred to as V-memory (variable) and is a 16-bit location normally used to manipulate data/numbers, store data/numbers, etc. Some information is automatically stored in V-memory. For example, the timer current values are stored in V-memory. The example shows how a four-digit BCD constant is loaded into the accumulator and then stored in a V-memory location.

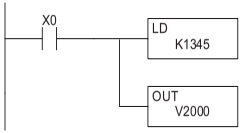

Stages (S Data type)

Stages are used in RLL^{PLUS} programs to create a structured program, similar to a flowchart. Each program Stage denotes a program segment. When the program segment, or Stage, is active, the logic within that segment is executed. If the Stage is off, or inactive, the logic is not executed and the CPU skips to the next active Stage. (See Chapter 7 for a more detailed description of RLL^{PLUS} programming.)

Each Stage also has a discrete status bit that can be used as an input to indicate whether the Stage is active or inactive. If the Stage is active, then the status bit is on. If the Stage is inactive, then the status bit is off. This status bit can also be turned on or off by other instructions, such as the SET or RESET instructions. This allows you to easily control stages throughout the program.

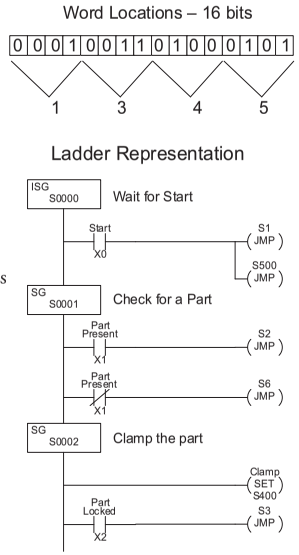

Special Relays (SP Data Type)

Special relays are discrete memory locations with pre-defined functionality. There are many different types of special relays. For example, some aid in program development, others provide system operating status information, etc. Appendix D provides a complete listing of the special relays.

In this example, control relay C10 will energize for 50 ms and de-energize for 50 ms because SP5 is a pre–defined relay that will be on for 50 ms and off for 50 ms.

SP4: 1 second clock
SP5: 100 ms clock
SP6: 50 ms clock

DL05 System V-memory

System Parameters and Default Data Locations (V Data Type)

The DL05 PLCs reserve several V-memory locations for storing system parameters or certain types of system data. These memory locations store things like the error codes, High-Speed I/O data, and other types of system setup information.

System V-memory		Description of Contents	Default Values/Ranges
V2320–V2377		The default location for multiple preset values for the High-Speed Counter	N/A
V7620–V7627		**Locations for DV–1000 operator interface parameters**	
	V7620	Sets the V-memory location that contains the value	V0 – V2377
	V7621	Sets the V-memory location that contains the message	V0 – V2377
	V7622	Sets the total number (1 – 16) of V-memory locations to be displayed.	1 – 16
	V7623	Sets the V-memory location containing the numbers to be displayed.	V0 – V2377
	V7624	Sets the V-memory location containing the character code to be displayed	V0 – V2377
	V7625	Contains the function number that can be assigned to each key.	V-memory location for X, Y, or C points used
	V7626	Power-up operational mode.	0, 1, 2, 12, 3
	V7627	Change preset value.	0000 to 9999
V7630		Starting location for the multi–step presets for channel 1. The default value is 2320, which indicates the first value should be obtained from V2320. Since there are 24 presets available, the default range is V2320 – V2377. You can change the starting point if necessary.	Default: V2320 Range: V0 – V2320
V7631–V7632		Reserved	N/A
V7633		Sets the desired function code for the high speed counter, interrupt, pulse catch, pulse train, and input filter. Location can also be used to set the power-up in Run Mode option.	Default: 0060 Lower Byte Range: Range: 10 – Counter 20 – Quadrature 30 – Pulse Out 40 – Interrupt 50 – Pulse Catch 60 – Filtered discrete In. Upper Byte Range: Bits 8–12, 14, 15: Unused Bit 13: Power–up in RUN, if Mode Switch is in TERM position.
V7634 - X0		Setup Registers for High-Speed I/O functions	Default: 1006
V7635 - X1			
V7636 - X2			
V7637		Pulse/Direction	Default: 0000
V7640–V7646		Reserved	N/A
V7647		Timed Interrupt	Default: 0000 Range: 0003–03E7h (3–9999ms)
V7650–V7654		Reserved	N/A
V7655		Port 2: Setup for the protocol, time-out, and the response delay time.	Default: 00E0
V7656		Port 2: Setup for the station number, baud rate, STOP bit, and parity.	Default: 8501

System V-memory	Description of Contents	Default Values/Ranges
V7657	Port 2: Setup completion code used to notify the completion of the parameter setup	Default: 0A00
V7660	Scan control setup: Keeps the scan control mode	Default: 0000
V7661	Setup timer over counter: Counts the times the actual scan time exceeds the user setup time	N/A
V7662–V7717	Reserved	
V7720–V7722	Locations for DV–1000 operator interface parameters	
V7720	Titled Timer preset value pointer	
V7721	Title Counter preset value pointer	
V7722	HiByte-Titled Timer preset block size, LoByte-Titled Counter preset block size	
V7723–V7750	Reserved	
V7751	Fault Message Error Code — stores the 4-digit code used with the FAULT instruction when the instruction is executed	
V7752–V7754	Reserved	
V7755	Error code — stores the fatal error code	
V7756	Error code — stores the major error code	
V7757	Error code — stores the minor error code	
V7760–V7762	Reserved	
V7763	Program address where syntax error exists	
V7764	Syntax error code	
V7765	Scan — stores the total number of scan cycles that have occurred since the last Program Mode to Run Mode transition	
V7766	Contains the number of seconds on optional Memory Cartridge clock (00-59)	
V7767	Contains the number of minutes on optional Memory Cartridge clock (00-59)	
V7770	Contains the number of hours on optional Memory Cartridge clock (00-23)	
V7771	Contains the day of week on optional Memory Cartridge (Mon., Tues., Wed., etc.)	
V7772	Contains the numerical day of month on optional Memory Cartridge (01, 02, etc.)	
V7773	Contains the numerical month on optional Memory Cartridge (01 to 12)	
V7774	Contains the year on optional Memory Cartridge (00 to 99)	
V7775	Scan — stores the current scan time (milliseconds)	
V7776	Scan — stores the minimum scan time that has occurred since the last Program Mode to Run Mode transition (milliseconds)	
V7777	Scan — stores the maximum scan time that has occurred since the last Program Mode to Run Mode transition (milliseconds)	

DL05 Memory Map Table

Memory Type	Discrete Memory Reference (octal)	Word Memory Reference (octal)	Decimal	Symbol
Input Points (See note)	X0 – X377	V40400 - V40417	256	X0
Output Points (See note)	Y0 – Y377	V40500 – V40517	256	Y0
Control Relays	C0 – C777	V40600 - V40637	512	C0 C0
Special Relays	SP0 – SP777	V41200 – V41237	512	SP0
Timers	T0 – T177	V41100 – V41107	128	TMR T0 K100
Timer Current Values	None	V0 – V177	128	V0 K100
Timer Status Bits	T0 – T177	V41100 – V41107	128	T0
Counters	CT0 – CT177	V41140 – V41147	128	CNT CT0 K10
Counter Current Values	None	V1000 – V1177	128	V1000 K100
Counter Status Bits	CT0 – CT177	V41140 – V41147	128	CT0
Data Words (See Appendix F)	None	V1200 – V7377	3968	None specific, used with many instructions.
Data Words Non-volatile (See Appendix F)	None	V7400 – V7577	128	None specific, used with many instructions. May be non-volatile if MOV inst. is used. Data can be rewritten to EEPROM at least 100,000 times before it fails.
Stages	S0 – S377	V41000 – V41017	256	SG S001 SP0
System parameters	None	V7600 – V7777	128	None specific, used for various purposes

NOTE: The DL05 has 8 discrete inputs and 6 discrete outputs which are standard. The number of inputs and/or outputs can be increased by adding one of the available option modules. Refer to either the DL05/06 Option Modules User Manual (D0-OPTIONS-M), our catalog or our website.

DL05 Aliases

An alias is an alternate way of referring to certain memory types, such as timer/counter current values, V-memory locations for I/O points, etc., which simplifies understanding the memory address. The use of the alias is optional, but some users may find the alias to be helpful when developing a program. The table below shows how the aliases can be used.

DL05 Aliases		
Address Start	**Alias Start**	**Example**
V0	TA0	V0 is the timer accumulator value for timer 0; therefore, its alias is TA0. TA1 is the alias for V1, etc.
V1000	CTA0	V1000 is the counter accumulator value for counter 0; therefore, its alias is CTA0. CTA1 is the alias for V1001, etc.
V40400	VX0	V40400 is the word memory reference for discrete bits X0 through X17; therefore, its alias is VX0. V40401 is the word memory reference for discrete bits X20 through X37; therefore, its alias is VX20.
V40500	VY0	V40500 is the word memory reference for discrete bits Y0 through Y17; therefore, its alias is VY0. V40501 is the word memory reference for discrete bits Y20 through Y37; therefore, its alias is VY20.
V40600	VC0	V40600 is the word memory reference for discrete bits C0 through C17; therefore, its alias is VC0. V40601 is the word memory reference for discrete bits C20 through C37; therefore, its alias is VC20.
V41000	VS0	V41000 is the word memory reference for discrete bits S0 through S17; therefore, its alias is VS0. V41001 is the word memory reference for discrete bits S20 through S37; therefore, its alias is VS20.
V41100	VT0	V41100 is the word memory reference for discrete bits T0 through T17; therefore, its alias is VT0. V41101 is the word memory reference for discrete bits T20 through T37; therefore, its alias is VT20.
V41140	VCT0	V41140 is the word memory reference for discrete bits CT0 through CT17; therefore, its alias is VCT0. V41141 is the word memory reference for discrete bits CT20 through CT37; therefore, its alias is VCT20.
V41200	VSP0	V41200 is the word memory reference for discrete bits SP0 through SP17; therefore, its alias is VSP0. V41201 is the word memory reference for discrete bits SP20 through SP37; therefore, its alias is VSP20.

X Input Bit Map

This table provides a listing of individual Input points associated with each V-memory address bit for the DL05's eight physical inputs. Actual available references are X0 to X377 (V40400 – V40417).

MSB	DL05 Input (X) Points															Address
15	14	13	12	11	10	9	8	7	6	5	4	3	2	1	0	
–	–	–	–	–	–	–	–	007	006	005	004	003	002	001	000	V40400

This table provides the listing for the individual option slot Input points available.

MSB	DL05 Option Slot Input (X) Points															Address
15	14	13	12	11	10	9	8	7	6	5	4	3	2	1	0	
117	116	115	114	113	112	111	110	107	106	105	104	103	102	101	100	V40404

Y Output Bit Map

This table provides a listing of individual output points associated with each V-memory address bit for the DL05's six physical outputs. Actual available references are Y0 to Y377 (V40500 – V40517).

MSB	DL05 Output (Y) Points														LSB	Address
15	14	13	12	11	10	9	8	7	6	5	4	3	2	1	0	
–	–	–	–	–	–	–	–	–	–	005	004	003	002	001	000	V40500

This table provides the listing for the individual option slot Output points available.

MSB	DL05 Option Slot Output (Y) Points														LSB	Address
15	14	13	12	11	10	9	8	7	6	5	4	3	2	1	0	
117	116	115	114	113	112	111	110	107	106	105	104	103	102	101	100	V40504

Control Relay Bit Map

This table provides a listing of the individual control relays associated with each V-memory address bit

MSB	DL05 Control Relays (C)														LSB	Address
15	14	13	12	11	10	9	8	7	6	5	4	3	2	1	0	
017	016	015	014	013	012	011	010	007	006	005	004	003	002	001	000	V40600
037	036	035	034	033	032	031	030	027	026	025	024	023	022	021	020	V40601
057	056	055	054	053	052	051	050	047	046	045	044	043	042	041	040	V40602
077	076	075	074	073	072	071	070	067	066	065	064	063	062	061	060	V40603
117	116	115	114	113	112	111	110	107	106	105	104	103	102	101	100	V40604
137	136	135	134	133	132	131	130	127	126	125	124	123	122	121	120	V40605
157	156	155	154	153	152	151	150	147	146	145	144	143	142	141	140	V40606
177	176	175	174	173	172	171	170	167	166	165	164	163	162	161	160	V40607
217	216	215	214	213	212	211	210	207	206	205	204	203	202	201	200	V40610
237	236	235	234	233	232	231	230	227	226	225	224	223	222	221	220	V40611
257	256	255	254	253	252	251	250	247	246	245	244	243	242	241	240	V40612
277	276	275	274	273	272	271	270	267	266	265	264	263	262	261	260	V40613
317	316	315	314	313	312	311	310	307	306	305	304	303	302	301	300	V40614
337	336	335	334	333	332	331	330	327	326	325	324	323	322	321	320	V40615
357	356	355	354	353	352	351	350	347	346	345	344	343	342	341	340	V40616
377	376	375	374	373	372	371	370	367	366	365	364	363	362	361	360	V40617
417	416	415	414	413	412	411	410	407	406	405	404	403	402	401	400	V40620
437	436	435	434	433	432	431	430	427	426	425	424	423	422	421	420	V40621
457	456	455	454	453	452	451	450	447	446	445	444	443	442	441	440	V40622
477	476	475	474	473	472	471	470	467	466	465	464	463	462	461	460	V40623
517	516	515	514	513	512	511	510	507	506	505	504	503	502	501	500	V40624
537	536	535	534	533	532	531	530	527	526	525	524	523	522	521	520	V40625
557	556	555	554	553	552	551	550	547	546	545	544	543	542	541	540	V40626
577	576	575	574	573	572	571	570	567	566	565	564	563	562	561	560	V40627
617	616	615	614	613	612	611	610	607	606	605	604	603	602	601	600	V40630
637	636	635	634	633	632	631	630	627	626	625	624	623	622	621	620	V40631
657	656	655	654	653	652	651	650	647	646	645	644	643	642	641	640	V40632
677	676	675	674	673	672	671	670	667	666	665	664	663	662	661	660	V40633
717	716	715	714	713	712	711	710	707	706	705	704	703	702	701	700	V40634
737	736	735	734	733	732	731	730	727	726	725	724	723	722	721	720	V40635
757	756	755	754	753	752	751	750	747	746	745	744	743	742	741	740	V40636
777	776	775	774	773	772	771	770	767	766	765	764	763	762	761	760	V40637

Stage Control/Status Bit Map

This table provides a listing of individual™ Stage control bits associated with each V-memory address bit.

MSB	DL05 Stage (S) Control Bits														LSB	Address
15	14	13	12	11	10	9	8	7	6	5	4	3	2	1	0	
017	016	015	014	013	012	011	010	007	006	005	004	003	002	001	000	**V41000**
037	036	035	034	033	032	031	030	027	026	025	024	023	022	021	020	**V41001**
057	056	055	054	053	052	051	050	047	046	045	044	043	042	041	040	**V41002**
077	076	075	074	073	072	071	070	067	066	065	064	063	062	061	060	**V41003**
117	116	115	114	113	112	111	110	107	106	105	104	103	102	101	100	**V41004**
137	136	135	134	133	132	131	130	127	126	125	124	123	122	121	120	**V41005**
157	156	155	154	153	152	151	150	147	146	145	144	143	142	141	140	**V41006**
177	176	175	174	173	172	171	170	167	166	165	164	163	162	161	160	**V41007**
217	216	215	214	213	212	211	210	207	206	205	204	203	202	201	200	**V41010**
237	236	235	234	233	232	231	230	227	226	225	224	223	222	221	220	**V41011**
257	256	255	254	253	252	251	250	247	246	245	244	243	242	241	240	**V41012**
277	276	275	274	273	272	271	270	267	266	265	264	263	262	261	260	**V41013**
317	316	315	314	313	312	311	310	307	306	305	304	303	302	301	300	**V41014**
337	336	335	334	333	332	331	330	327	326	325	324	323	322	321	320	**V41015**
357	356	355	354	353	352	351	350	347	346	345	344	343	342	341	340	**V41016**
377	376	375	374	373	372	371	370	367	366	365	364	363	362	361	360	**V41017**

Timer Status Bit Map

This table provides a listing of individual timer contacts associated with each V-memory address bit.

MSB	DL05 Timer (T) Contacts														LSB	Address
15	14	13	12	11	10	9	8	7	6	5	4	3	2	1	0	
017	016	015	014	013	012	011	010	007	006	005	004	003	002	001	000	**V41100**
037	036	035	034	033	032	031	030	027	026	025	024	023	022	021	020	**V41101**
057	056	055	054	053	052	051	050	047	046	045	044	043	042	041	040	**V41102**
077	076	075	074	073	072	071	070	067	066	065	064	063	062	061	060	**V41103**
117	116	115	114	113	112	111	110	107	106	105	104	103	102	101	100	**V41104**
137	136	135	134	133	132	131	130	127	126	125	124	123	122	121	120	**V41105**
157	156	155	154	153	152	151	150	147	146	145	144	143	142	141	140	**V41106**
177	176	175	174	173	172	171	170	167	166	165	164	163	162	161	160	**V41107**

Counter Status Bit Map

This table provides a listing of individual counter contacts associated with each V-memory address bit.

MSB	DL05 Counter (CT) Contacts														LSB	Address
15	14	13	12	11	10	9	8	7	6	5	4	3	2	1	0	
017	016	015	014	013	012	011	010	007	006	005	004	003	002	001	000	**V41140**
037	036	035	034	033	032	031	030	027	026	025	024	023	022	021	020	**V41141**
057	056	055	054	053	052	051	050	047	046	045	044	043	042	041	040	**V41142**
077	076	075	074	073	072	071	070	067	066	065	064	063	062	061	060	**V41143**
117	116	115	114	113	112	111	110	107	106	105	104	103	102	101	100	**V41144**
137	136	135	134	133	132	131	130	127	126	125	124	123	122	121	120	**V41145**
157	156	155	154	153	152	151	150	147	146	145	144	143	142	141	140	**V41146**
177	176	175	174	173	172	171	170	167	166	165	164	163	162	161	160	**V41147**

Notes

Configuration and Connections

Chapter 4

In This Chapter:

DL05 System Design Strategies 4–2
Network Configuration and Connections 4–4
Network Slave Operation 4–8
Network Master Operation 4–14

DL05 System Design Strategies

I/O System Configurations

The DL05 PLCs offer a number of different I/O configurations. Choose the configuration that is right for your application, and keep in mind that the DL05 PLCs offer the ability to add an I/O card in the option slot. Although remote I/O isn't available, there are several option cards available. For instance:

- Various A/C and D/C I/O modules
- Combination I/O modules
- Analog I/O modules
- Combination Analog I/O modules

A DL05 system can be developed with an arrangement using a selected option modules. See our DL05/06 Options Modules User Manual (D0-OPTIONS-M) on the website, www.automationdirect.com for detailed selection information.

Networking Configurations

The DL05 PLCs offers the following ways to add networking:

- **Ethernet Communications Module** – connects a DL05 to high-speed peer-to-peer networks. Any PLC can initiate communications with any other PLC or operator interfaces, such as C-more, when using the ECOM modules.
- **Data Communications Modules** – connects a DL05 to devices using either DeviceNet or Profibus to link to master controllers, as well as a D0-DCM.
- **Communications Port 1** – The DL05 has a 6-pin RJ12 connector on Port 1 that supports (as slave) K-sequence, Modbus RTU or *Direct*NET protocols.
- **Communications Port 2** – The DL05 has a 6-pin RJ12 connector on Port 2 that supports either master/slave Modbus RTU or *Direct*NET protocols, or K-sequence protocol as slave. Port 2 can also be used for ASCII OUT communications.

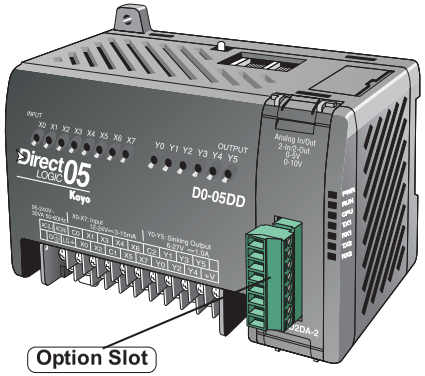

Automatic I/O Configuration

The DL05 CPUs will automatically detect the optional I/O module, if installed, at powerup and establish the correct I/O configuration and addresses. The configuration may never need to be changed.

The I/O addresses use octal numbering, with X0 to X7 being the eight inputs and Y0 to Y5 being the addresses for the six outputs. The discrete option slot addresses are assigned in groups of 8 or 16 depending on the number of I/O points for the I/O module. The discrete option module addressing will be X100 to X107 and X110 to X117 for the maximum sixteen point input module. The addressing for the sixteen point output module will be Y100 to Y107 and Y110 to Y117. Refer to the DL05/06 Options Modules User Manual (D0-OPTIONS-M) for the various discrete I/O modules available and the addressing for each one.

Power Budgeting

No power budgeting is necessary for the DL05. The built-in power supply is sufficient for powering the base unit, your choice of option module, the handheld programmer and the DV-1000 operator interface.

Network Configuration and Connections

Configuring the DL05's Comm Ports

This section describes how to configure the CPU's built-in networking ports for either Modbus or *Direct*NET. This will allow you to connect the DL05 PLC system directly to Modbus networks using the RTU protocol, or to other devices on a *Direct*NET network. Modbus host systems must be capable of issuing the Modbus commands to read or write the appropriate data. For details on the Modbus protocol, check with your Modbus supplier for the latest version of the Gould Modbus Protocol reference Guide. For more details on *Direct*NET, order our *Direct*NET manual, part number DA–DNET–M.

DL05 Port Specifications

	Communications Port 1
Port 1	Connects to HPP, *Direct*SOFT 5, operator interfaces, etc.
	6-pin, RS232C
	Communication speed: 9600 Baud (fixed)
	Parity: odd (fixed)
	Station Address: 1 (fixed)
	8 data bits
	1 start, 1 stop bit
	Asynchronous, half-duplex, DTE
	Protocol (auto-select): K-sequence (slave only), *Direct*NET (slave only), Modbus (slave only)

	Communications Port 2
Port 2	Connects to HPP, *Direct*SOFT 5, operator interfaces, etc.
	6-pin, multifunction port, RS232C
	Communication speed (baud): 300, 600, 1200, 2400, 4800, 9600, 19200, 38400
	Parity: odd (default), even, none
	Station Address: 1 (default)
	8 data bits
	1 start, 1 stop bit
	Asynchronous, half-duplex, DTE
	Protocol (auto-select): K-sequence (slave only), *Direct*NET (master/slave), Modbus (master/slave), non-sequence/print

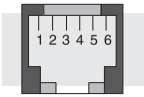

Port 1	Pin	Descriptions
1	0V	Power (–) connection (GND)
2	5V	Power (+) connection
3	RXD	Receive Data (RS232C)
4	TXD	Transmit Data (RS232C
5	5V	Power (+) connection
6	0V	Power (–) connection (GND)

Port 2	Pin	Descriptions
1	0V	Power (–) connection (GND)
2	5V	Power (+) connection
3	RXD	Receive Data (RS232C)
4	TXD	Transmit Data (RS232C
5	RTS	Request to Send
6	0V	Power (–) connection (GND)

Networking DL05 to DL05 RS-232C

You will need to make sure the network connection is a 3-wire RS–232 type. The recommended cable is Belden 8102 or equivalent. Normally, the RS–232 signals are used for communications between two devices with distances up to a maximum of 15 meters.

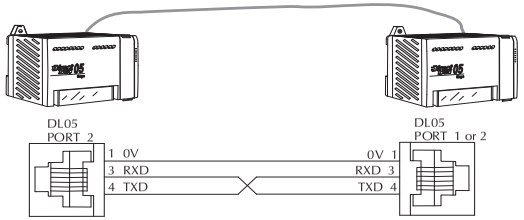

Networking PC to DL05s RS–422 and to Other PLCs

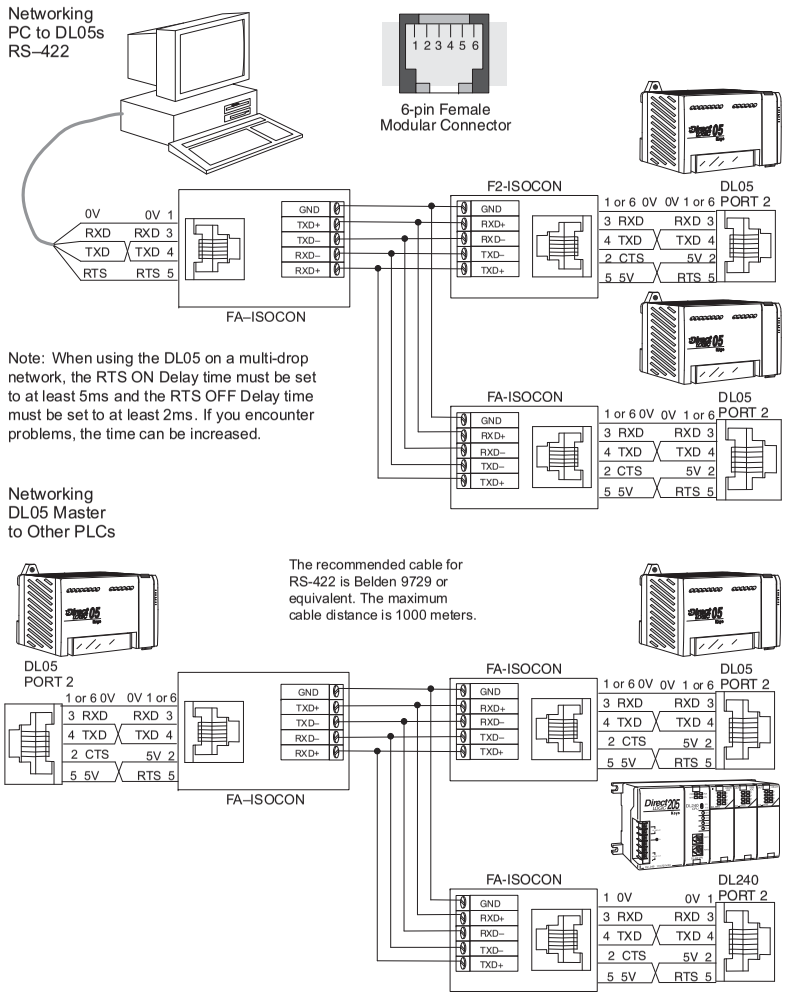

Modbus Port Configuration

In *Direct*SOFT 5, choose the PLC menu, then Setup, then "Secondary Comm Port".

- **Port**: From the port number list box at the top, choose "Port 2".
- **Protocol**: Click the check box to the left of "Modbus" (use AUX 56 on the HPP, and select "MBUS"), and then you'll see the dialog box below.

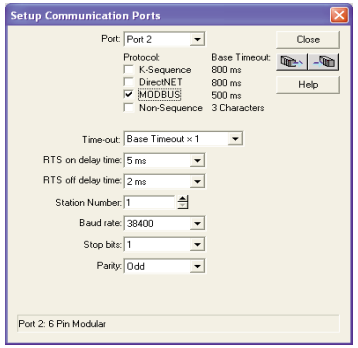

- **Timeout**: Amount of time the port will wait after it sends a message to get a response before logging an error.
- **RTS ON / OFF Delay Time:** The RTS ON Delay Time specifies the time the DL05 waits to send the data after it has raised the RTS signal line. The RTS OFF Delay Time specifies the time the DL05 waits to release the RTS signal line after the data has been sent. *When using the DL05 on a multi-drop network, the RTS ON Delay time must be set to at least* ***5ms*** *and the RTS OFF Delay time must be set to at least* ***2ms****. If you encounter problems, the time can be increased.*
- **Station Number**: The possible range for Modbus slave numbers is from 1 to 247, but the DL05 network instructions used in Master mode will access only slaves 1 to 99. Each slave must have a unique number. At powerup, the port is automatically a slave, unless and until the DL05 executes ladder logic network instructions which use the port as a master. Thereafter, the port reverts back to slave mode until ladder logic uses the port again.
- **Baud Rate**: The available baud rates include 300, 600, 1200, 2400, 4800, 9600, 19200, and 38400 baud. Choose a higher baud rate initially, reverting to lower baud rates if you experience data errors or noise problems on the network. Important: You must configure the baud rates of all devices on the network to the same value. Refer to the appropriate product manual for details.
- **Stop Bits**: Choose 1 or 2 stop bits for use in the protocol.
- **Parity**: Choose none, even, or odd parity for error checking.

Then click the button indicated to send the Port configuration to the CPU, and click Close.

*Direct*NET Port Configuration

In *Direct*SOFT 5, choose the PLC menu, then Setup, then "Secondary Comm Port".

- **Port**: From the port number list box, choose "Port 2 ".
- **Protocol**: Click the check box to the left of "*Direct*NET" (use AUX 56 on the HPP, then select "DNET"), and then you'll see the dialog box below.

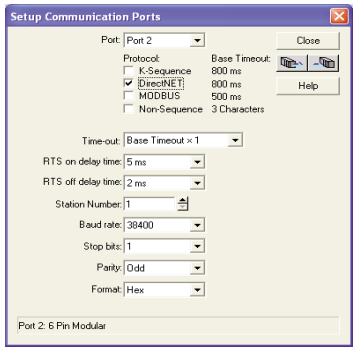

- **Timeout**: Amount of time the port will wait after it sends a message to get a response before logging an error.
- **RTS ON / OFF Delay Time**: The RTS ON Delay Time specifies the time the DL05 waits to send the data after it has raised the RTS signal line. The RTS OFF Delay Time specifies the time the DL05 waits to release the RTS signal line after the data has been sent. *When using the DL05 on a multi-drop network, the RTS ON Delay time must be set to at least* ***5ms*** *and the RTS OFF Delay time must be set to at least* ***2ms****. If you encounter problems, the time can be increased.*
- **Station Number:** For making the CPU port a DirectNET master, choose "1". The allowable range for *Direct*NET slaves is from 1 to 90 (each slave must have a unique number). At powerup, the port is automatically a slave, unless and until the DL05 executes ladder logic instructions which attempt to use the port as a master. Thereafter, the port reverts back to slave mode until ladder logic uses the port again.
- **Baud Rate:** The available baud rates include 300, 600, 1200, 2400, 4800, 9600, 19200, and 38400 baud. Choose a higher baud rate initially, reverting to lower baud rates if you experience data errors or noise problems on the network. Important: You must configure the baud rates of all devices on the network to the same value.
- **Stop Bits:** Choose 1 or 2 stop bits for use in the protocol.
- **Parity:** Choose none, even, or odd parity for error checking.
- **Format:** Choose between hex or ASCII formats.

Then click the button indicated to send the Port configuration to the CPU, and click Close.

Network Slave Operation

This section describes how other devices on a network can communicate with a CPU port that you have configured as a ***Direct***NETslave or Modbus slave (DL05). A Modbus host must use the Modbus RTU protocol to communicate with the DL05 as a slave. The host software must send a Modbus function code and Modbus address to specify a PLC memory location the DL05 comprehends. The ***Direct***NET host uses normal I/O addresses to access applicable DL05 CPU and system. No CPU ladder logic is required to support either Modbus slave or ***Direct***NET slave operation.

Modbus Function Codes Supported

The Modbus function code determines whether the access is a read or a write, and whether to access a single data point or a group of them. The DL05 supports the Modbus function codes described below.

MODBUS Function Code	Function	DL05 Data Types Available
01	Read a group of coils	Y, CR, T, CT
02	Read a group of inputs	X, SP
05	Set / Reset a single coil	Y, CR, T, CT
15	Set / Reset a group of coils Y,	CR, T, CT
03, 04	Read a value from one or more registers	V
06	Write a value into a single register	V
16	Write a value into a group of registers	V

Determining the Modbus Address

There are typically two ways that most host software conventions allow you to specify a PLC memory location. These are:

- By specifying the Modbus data type and address
- By specifying a Modbus address only

*NOTE: For information about the Modbus protocol see the Group Schneider website at: www.schneiderautomation.com. At the main menu, select Support/Services, Modbus, Modbus Technical Manuals, PI-MBUS-300 Modbus Protocol Reference Guide or search for PIMBUS300. For more information about the **Direct**NET protocol, order our **Direct**NET User Manual, DA-DNET-M, or download the manual free from our website: www.automationdirect.com. Select Manuals\Docs\onlineusermanuals\misc.\DA-DNET-M*

If Your Host Software Requires the Data Type and Address...

Many host software packages allow you to specify the Modbus data type and the Modbus address that corresponds to the PLC memory location. This is the easiest method, but not all packages allow you to do it this way.

The actual equation used to calculate the address depends on the type of PLC data you are using. The PLC memory types are split into two categories for this purpose.

- Discrete – X, SP, Y, CR, S, T, C (contacts)
- Word – V, Timer current value, Counter current value

In either case, you basically convert the PLC octal address to decimal and add the appropriate Modbus address (if required). The table below shows the exact equation used for each group of data.

DL05 Memory Type	QTY (Dec.)	PLC Range(Octal	Modbus Address Range (Decimal)	Modbus Data Type
For Discrete Data Types .... Convert PLC Addr. to Dec. + Start of Range + Data Type				
Inputs (X)	256	X0 – X377	2048 – 2303	Input
Special Relays(SP)	512	SP0 – SP777	3072 – 3583	Input
Outputs (Y)	256	Y0 – Y377	2048 – 2303	Coil
Control Relays (CR)	512	C0 – C777	3072 – 4583	Coil
Timer Contacts (T)	128	T0 – T177	6144 – 6271	Coil
Counter Contacts (CT)	128	CT0 – CT177	6400 – 6527	Coil
Stage Status Bits(S)	256	S0 – S377	5120 – 5375	Coil
For Word Data Types .... Convert PLC Addr. to Dec. + Data Type				
Timer Current Values (V)	128	V0 – V177	0 – 127	Input Register
Counter Current Values (V)	128	V1000 – V1177	512 – 639	Input Register
V-Memory, user data (V)	3968	V1200 – V7377	640 – 3839	Holding Register
V-Memory, non-volatile (V)	128	V7600 – V7777	3968 – 4095	Holding Register

The following examples show how to generate the Modbus address and data type for hosts which require this format.

Example 1: V2100

Find the Modbus address for User V location V2100.

1. Find V memory in the table.
2. Convert V2100 into decimal (1088).
3. Use the Modbus data type from the table.

PLC Address (Dec) + Data Type

V2100 = 1088 decimal

1088 + Hold. Reg. = **Holding Reg 1088**

V Memory, user data (V)	3200	V1200 – V7377	640 – 3839	Holding Register

Example 2: Y20

Find the Modbus address for output Y20.

1. Find Y outputs in the table.
2. Convert Y20 into decimal (16).
3. Add the starting address for the range (2048).
4. Use the Modbus data type from the table.

PLC Address (Dec) + Start Addr + Data Type

Y20 = 16 decimal

16 + 2048 + Coil = **Coil 2064**

Outputs (V)	256	Y0 – Y377	2048 - 2303	Coil

Example 3: T10 Current Value

Find the Modbus address to obtain the current value from Timer T10.

1. Find Timer Current Values in the table.
2. Convert T10 into decimal (8).
3. Use the Modbus data type from the table.

PLC Address (Dec) + Data Type

T10 = 8 decimal

8 + Input Reg. = **Input Reg. 8**

Timer Current Values (V)	128	V0 – V177	0 - 127	Input Register

Example 4: C54

Find the Modbus address for Control Relay C54.

1. Find Control Relays in the table.
2. Convert C54 into decimal (44).
3. Add the starting address for the range (3072).
4. Use the Modbus data type from the table.

PLC Address (Dec) + Start Addr. + Data Type

C54 = 44 decimal

44 + 3072 + Coil = **Coil 3116**

Control Relays (CR)	512	C0 – C77	3072 – 3583	Coil

If Your Modbus Host Software Requires an Address ONLY

Some host software does not allow you to specify the Modbus data type and address. Instead, you specify an address only. This method requires another step to determine the address, but it's still fairly simple. Basically, Modbus also separates the data types by address ranges as well. So this means an address alone can actually describe the type of data and location. This is often referred to as "adding the offset". One important thing to remember here is that two different addressing modes may be available in your host software package. These are:

- 484 Mode
- 584/984 Mode

We recommend that you use the 584/984 addressing mode if your host software allows you to choose. This is because the 584/984 mode allows access to a higher number of memory locations within each data type. If your software only supports 484 mode, then there may be some PLC memory locations that will be unavailable. The actual equation used to calculate the address depends on the type of PLC data you are using. The PLC memory types are split into two categories for this purpose.

- Discrete – X, SP, Y, CR, S, T (contacts), C (contacts)
- Word – V, Timer current value, Counter current value

In either case, you basically convert the PLC octal address to decimal and add the appropriate Modbus addresses (as required). The table below shows the exact equation used for each group of data.

Discrete Data Types				
DL05 Memory Type	**PLC Range (Octal)**	**Address (484 Mode)**	**Address (584/984 Mode)**	**Modbus Data Type**
Global Inputs (GX)	GX0-GX1746	1001 - 1999	10001 - 10999	Input
	GX1747-GX3777	---	11000 - 12048	Input
Inputs (X)	X0 – X1777	---	12049 - 13072	Input
Special Relays (SP)	SP0 – SP777	---	13073 - 13584	Input
Global Outputs (GY)	GY0 - GY3777	1 - 2048	1 - 2048	Output
Outputs (Y)	Y0 – Y1777	2049 - 3072	2049 - 3072	Output
Control Relays (CR)	C0 – C3777	3073 - 5120	3073 - 5120	Output
Timer Contacts (T)	T0 – T377	6145 - 6400	6145 - 6400	Output
Counter Contacts (CT)	CT0 – CT377	6401 - 6656	6401 - 6656	Output
Stage Status Bits (S)	S0 – S1777	5121 - 6144	5121 - 6144	Output

Word Data Types			
Registers	**PLC Range (Octal)**	**Input/Holding (484 Mode)***	**Input/Holding (584/984 Mode)***
V-Memory (Timers)	V0 - V377	3001/4001	30001/40001
V-Memory (Counters)	V1000 - V1177	3513/4513	30513/40513
V-Memory (Data Words)	V1200 - V1377	3641/4641	30641/40641
	V1400 - V1746	3769/4769	30769/40769
	V1747 - V1777	---	31000/41000
	V2000 - V7377	---	41025
	V10000 - V17777	---	44097

* Modbus: Function 04
The DL05/06, DL250-1/260, DL350 and DL450 will support function 04, read input register (Address 30001). To use function 04, put the number '4' into the most significant position (4xxx). Four digits must be entered for the instruction to work properly with this mode.

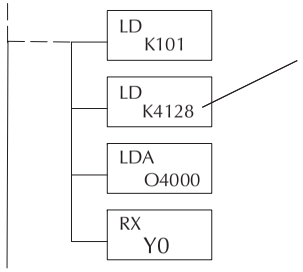

The Maximum constant possible is 4128. This is due to the 128 maximum number of Bytes that the RX/WX instruction can allow. The value of 4 in the most significant position of the word will cause the RX to use function 04 (30001 range).

1. Refer to your PLC user manual for the correct memory mapping size of your PLC. Some of the addresses shown above might not pertain to your particular CPU.

2. For an automated Modbus/Koyo address conversion utility, download the file **modbus_conversion.xls** from the **www.automationdirect.com** website.

Example 1: V2100 584/984 Mode

Find the Modbus address for user V-memory V2100.

1. Find V memory in the table.
2. Convert V2100 into decimal (1088).
3. Add the Modbus starting address for the mode (40001).

PLC Address (Dec) + Mode Address
V2100 = 1088 decimal
1088 + 40001 = **41089**

For Word Data Types....	PLC Address (Dec.)		+	Appropriate Mode Address		
Timer Current Values (V)	128	V0 – V177	0 – 127	3001	30001	Input Register
Counter Current Values (V)	128	V1200 – V7377	512 – 639	3001	30001	Input Register
V-Memory, user data (V)	1024	V2000 – V3777	1024 – 2047	4001	40001	Holding Register

Example 2: Y20 584/984 Mode

Find the Modbus address for output Y20.

1. Find Y outputs in the table.
2. Convert Y20 into decimal (16).
3. Add the starting address for the range (2048).
4. Add the Modbus address for the mode (1).

PLC Address (Dec) + Start Addr + Mode
Y20 = 16 decimal
16 + 2048 + 1 = **2065**

Outputs (Y)	320	Y0 - Y477	2048 - 2367	1	1	Coil
Control Relays (CR)	256	C0 - C377	3072 - 3551	1	1	Coil
Timer Contacts (T)	128	T0 - T177	6144 - 6271	1	1	Coil

Example 3: T10 Current Value 484 Mode

Find the Modbus address to obtain the current value for Timer T10.

1. Find Timer Current Values in the table.
2. Convert T10 into decimal (8).
3. Add the Modbus starting address for the mode (3001).

PLC Address (Dec) + Mode Address
T10 = 8 decimal
8 + 3001 = **3009**

For Word Data Types....	PLC Address (Dec.)		+	Appropriate Mode Address		
Timer Current Values (V)	128	V0 – V177	0 – 127	3001	30001	Input Register
Counter Current Values (V)	128	V1200 – V7377	512 – 639	3001	30001	Input Register
V-Memory, user data (V)	1024	V2000 – V3777	1024 – 2047	4001	40001	Holding Register

Example 4: C54 584/984 Mode

Find the Modbus address for Control Relay C54.

1. Find Control Relays in the table.
2. Convert C54 into decimal (44).
3. Add the starting address for the range (3072).
4. Add the Modbus address for the mode (1).

PLC Address (Dec) + Start Addr + Mode
C54 = 44 decimal
44 + 3072 + 1 = **3117**

Outputs (Y)	320	Y0 - Y477	2048 - 2367	1	1	Coil
Control Relays (CR)	256	C0 - C377	3072 - 3551	1	1	Coil
Timer Contacts (T)	128	T0 - T177	6144 - 6271	1	1	Coil

Network Master Operation

This section describes how the DL05 PLC can communicate on a Modbus or *Direct*NET network as a master. For Modbus networks, it uses the Modbus RTU protocol, which must be interpreted by all the slaves on the network. Both Modbus and *Direct*NET are single master/multiple slave networks. The master is the only member of the network that can initiate requests on the network. This section teaches you how to design the required ladder logic for network master operation.

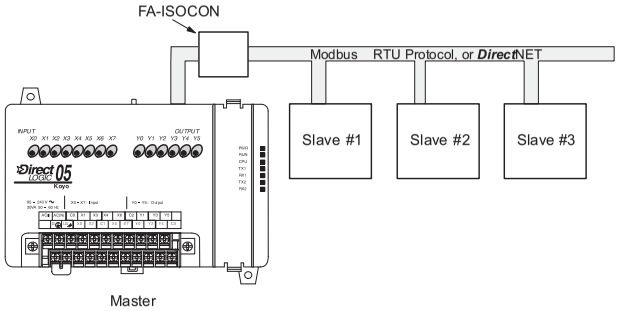

When using the DL05 PLC as the master station, simple RLL instructions are used to initiate the requests. The WX instruction initiates network write operations, and the RX instruction initiates network read operations. Before executing either the WX or RX commands, we will need to load data related to the read or write operation onto the CPU's accumulator stack. When the WX or RX instruction executes, it uses the information on the stack combined with data in the instruction box to completely define the task, which goes to the port.

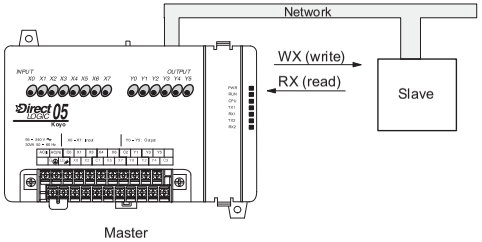

The following step-by-step procedure will provide you the information necessary to set up your ladder program to receive data from a network slave.

Step 1: Identify Master Port # and Slave

The first Load (LD) instruction identifies the communications port number on the network master (DL05) and the address of the slave station. This instruction can address up to 99 Modbus slaves, or 90 *Direct*NET slaves. The format of the word is shown to the right. The "F2" in the upper byte indicates the use of the right port of the DL05 PLC, port number 2. The lower byte contains the slave address number in BCD (01 to 99).

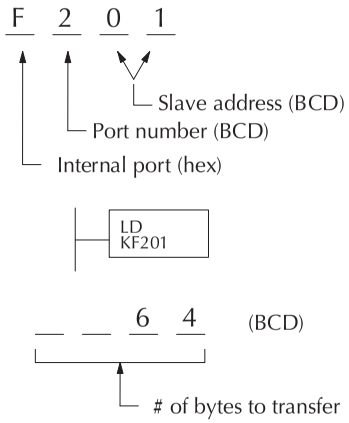

Step 2: Load Number of Bytes to Transfer

The second Load (LD) instruction determines the number of bytes which will be transferred between the master and slave in the subsequent WX or RX instruction. The value to be loaded is in BCD format (decimal), from 1 to 128 bytes.

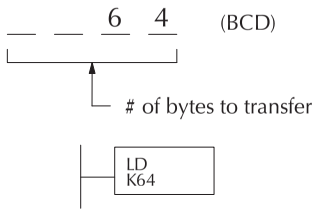

The number of bytes specified also depends on the type of data you want to obtain. For example, the DL05 Input points can be accessed by V-memory locations or as X input locations. However, if you only want X0 – X27, you'll have to use the X input data type because the V-memory locations can only be accessed in 2-byte increments. The following table shows the byte ranges for the various types of *Direct*LOGIC™ products.

DL 05/205/350/405 Memory	Bits per unit	Bytes
V-memory T / C current value	16 16	2 2
Inputs (X, SP)	8	1
Outputs (Y, C, Stage, T/C bits)	8	1
Scratch Pad Memory	8	1
Diagnostic Status	8	1

DL330/340 Memory	Bits per unit	Bytes
Data registers T / C accumulator	8 16	1 2
I/O, internal relays, shift register bits, T/C bits, stage bits	1	1
Scratch Pad Memory	8	1
Diagnostic Status(5 word R/W)	16	10

Step 3: Specify Master Memory Area

The third instruction in the RX or WX sequence is a Load Address (LDA) instruction. Its purpose is to load the starting address of the memory area to be transferred. Entered as an octal number, the LDA instruction converts it to hex and places the result in the accumulator.

For a WX instruction, the DL05 CPU sends the number of bytes previously specified from its memory area beginning at the LDA address specified.

For an RX instruction, the DL05 CPU reads the number of bytes previously specified from the slave, placing the received data into its memory area beginning at the LDA address specified.

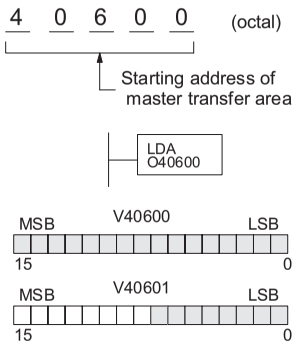

NOTE: Since V-memory words are always 16 bits, you may not always use the whole word. For example, if you only specify 3 bytes and you are reading Y outputs from the slave, you will only get 24 bits of data. In this case, only the 8 least significant bits of the last word location will be modified. The remaining 8 bits are not affected.

Step 4: Specify Slave Memory Area

The last instruction in our sequence is the WX or RX instruction itself. Use WX to write to the slave, and RX to read from the slave. All four of our instructions are shown to the right. In the last instruction, you must specify the starting address and a valid data type for the slave.

- *Direct*NET slaves – specify the same address in the WX and RX instruction as the slave's native I/O address
- Modbus DL405, DL205, or DL05 slaves – specify the same address in the WX and RX instruction as the slave's native I/O address
- Modbus 305 slaves – use the following table to convert DL305 addresses to Modbus addresses

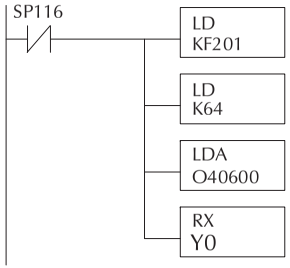

DL305 Series CPU Memory Type–to–Modbus Cross Reference (excluding 350 CPU)					
PLC Memory Type	PLC Base Address	Modbus Base Address	PLC Memory Type	PLC Base Address	Modbus Base Address
TMR/CNT Current Values	R600	V0	TMR/CNT Status Bits	CT600	GY600
I/O Points	IO 000	GY0	Control Relays	CR160	GY160
Data Registers	R401,R400	V100	Shift Registers	SR400	GY400
Stage Status Bits (D3-330P only)	S0	GY200			

Communications from a Ladder Program

Typically network communications will last longer than 1 scan. The program must wait for the communications to finish before starting the next transaction.

Port 2, which can be a master, has two Special Relay contacts associated with it (see Appendix D for comm port special relays). One indicates "Port busy"(SP116), and the other indicates "Port Communication Error"(SP117). The example above shows the use of these contacts for a network master that only reads a device (RX). The "Port Busy" bit is on while the PLC communicates with the slave. When the bit is off the program can initiate the next network request.

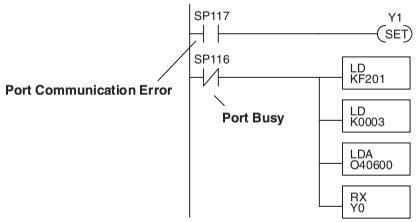

The "Port Communication Error" bit turns on when the PLC has detected an error. Use of this bit is optional. When used, it should be ahead of any network instruction boxes since the error bit is reset when an RX or WX instruction is executed.

Multiple Read and Write Interlocks

If you are using multiple reads and writes in the RLL program, you have to interlock the routines to make sure all the routines are executed. If you don't use the interlocks, then the CPU will only execute the first routine. This is because each port can only handle one transaction at a time.

In the example to the right, after the RX instruction is executed, C0 is set. When the port has finished the communication task, the second routine is executed and C0 is reset.

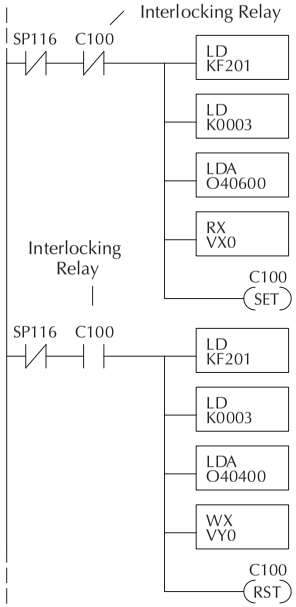

Notes

Standard RLL and Intelligent Box Instructions

Chapter 5

In This Chapter:

Introduction 5–2
Using Boolean Instructions 5–4
Boolean Instructions 5–9
Comparative Boolean 5–25
Immediate Instructions 5–31
Timer, Counter and Shift Register Instructions 5–35
Accumulator/Stack Load and Output Data Instructions 5–48
Logical Instructions (Accumulator) 5–60
Math Instructions 5–68
Bit Operation Instructions 5–82
Number Conversion Instructions (Accumulator) 5–87
Table Instructions 5–96
CPU Control Instructions 5–99
Program Control Instructions 5–101
Interrupt Instructions 5–108
Message Instructions 5–111
Intelligent I/O Instructions 5–118
Network Instructions 5–120
Intelligent Box (IBox) Instructions 5-124

Introduction

DL05 Micro PLCs offer a wide variety of instructions to perform many different types of operations. This chapter shows you how to use each standard Relay Ladder Logic (RLL) instruction. In addition to these instructions, you may also need to refer to the Drum instruction in Chapter 6, or the Stage programming instructions in Chapter 7.

There are two ways to quickly find the instruction you need.

- If you know the instruction category (Boolean, Comparative Boolean, etc.) just use the title at the top of the page to find the pages that discuss the instructions in that category.
- If you know the individual instruction name, use the following table to find the page(s) that discusses the instruction.

Instruction	Page
Accumulating Timer (TMRA)	5–38
Accumulating Fast Timer (TMRAF)	5-38
Add (ADD)	5–68
Add Binary (ADDB)	5–78
Add Double (ADDD)	5–69
And (AND)	5–13
And (AND)	5–30
And (AND)	5–60
And Bit-of-Word (ANDB)	5-14
And Double (ANDD)	5–61
And If Equal (ANDE)	5–27
And If Not Equal (ANDNE)	5–27
And Immediate (ANDI)	5–32
And Negative Differential (ANDND)	5–21
And Not (ANDN)	5–13
And Not (ANDN)	5–30
And Not Bit-of-Word (ANDNB)	5-14
And Not Immediate (ANDNI)	5–32
And Positive Differential (ANDPD)	5–21
And Store (AND STR)	5–15
ASCII Constant (ACON)	5–112
ASCII to HEX (ATH)	5–90
Binary (BIN)	5–87
Binary Coded Decimal (BCD)	5–88
Compare (CMP)	5–66
Compare Double (CMPD)	5–67
Counter (CNT)	5–41
Data Label (DLBL)	5–112

Instruction	Page
Decode (DECO)	5–86
Decrement (DEC)	5–76
Decrement Binary (DECB)	5–77
Disable Interrupts (DISI)	5–109
Divide (DIV)	5–74
Divide Binary (DIVB)	5–81
Divide Double (DIVD)	5–75
Enable Interrupts (ENI)	5–108
Encode (ENCO)	5–85
End (END)	5–99
Exclusive Or (XOR)	5–64
Exclusive Or Double (XORD)	5–65
Fault (FAULT)	5–111
For / Next (FOR) (NEXT)	5–101
Goto Subroutine (GTS) (SBR)	5–103
Gray Code (GRAY)	5–93
HEX to ASCII (HTA)	5–91
Increment (INC)	5–76
Increment Binary (INCB)	5–77
Interrupt (INT)	5–108
Interrupt Return (IRT)	5–108
Interrupt Return Conditional (IRTC)	5–108
Invert (INV)	5–89
Load (LD)	5–53
Load Address (LDA)	5–56
Load Double (LDD)	5–54
Load Formatted (LDF)	5–55
Load Label (LDLBL)	5–97

Instruction	Page
Master Line Reset (MLR)	5–106
Master Line Set (MLS)	5–106
Move (MOV)	5–96
Move Memory Cartridge (MOVMC)	5–97
Multiply (MUL)	5–72
Multiply Binary (MULB)	5–80
Multiply Double (MULD)	5–73
No Operation (NOP)	5–99
Not (NOT)	5–18
Numerical Constant (NCON)	5–112
Or (OR)	5–11
Or (OR)	5–29
Or (OR)	5–62
Or Bit-of-Word (ORB)	5-12
Or Double (ORD)	5–63
Or If Equal (ORE)	5–26
Or If Not Equal (ORNE)	5–26
Or Immediate (ORI)	5–31
Or Negative Differential (ORND)	5–20
Or Not (ORN)	5–11
Or Not (ORN)	5–29
Or Not Bit-of-Word (ORNB)	5-12
Or Not Immediate (ORNI)	5–31
Or Out (OR OUT)	5–16
Or Out Immediate (OROUTI)	5–33
Or Positive Differential (ORPD)	5–20
Or Store (OR STR)	5–15
Out (OUT)	5–16
Out (OUT)	5–57
Out Bit-of-Word (OUTB)	5-17
Out Double (OUTD)	5–57
Out Formatted (OUTF)	5–58
Out Immediate (OUTI)	5–33
Pause (PAUSE)	5–24
Pop (POP)	5–58
Positive Differential (PD)	5–18
Print Message (PRINT)	5–114
Read from Intelligent Box I/O Module (RD)	5-118
Read from Network (RX)	5–120
Reset (RST)	5–22

Instruction	Page
Reset Bit-of-Word (RSTB)	5-23
Reset Immediate (RSTI)	5–34
Reset Watch Dog Timer (RSTWT)	5–100
Set (SET)	5–22
Set Bit-of-Word (SETB)	5-23
Set Immediate (SETI)	5–34
Shift Left (SHFL)	5–83
Shift Register (SR)	5–47
Shift Right (SHFR)	5–84
Shuffle Digits (SFLDGT)	5–94
Stage Counter (SGCNT)	5–43
Stop (STOP)	5–99
Store (STR)	5–9
Store (STR)	5-28
Store Bit-of-Word (STRB)	5-10
Store If Equal (STRE)	5–25
Store If Not Equal (STRNE)	5–25
Store Immediate (STRI)	5–31
Store Negative Differential (STRND)	5–19
Store Not (STRN)	5–9
Store Not (STRN)	5-28
Store Not Bit-of-Word (STRNB)	5-10
Store Not Immediate (STRNI)	5–31
Store Positive Differential (STRPD)	5–19
Subroutine Return (RT)	5–103
Subroutine Return Conditional (RTC)	5–103
Subtract (SUB)	5–70
Subtract Binary (SUBB)	5–79
Subtract Double (SUBD)	5–71
Sum (SUM)	5–81
Timer (TMR) and Timer Fast (TMRF)	5–36
Up Down Counter (UDC)	5–45
Write to Intelligent Box I/O Module (WT)	5-119
Write to Network (WX)	5–122

Using Boolean Instructions

Do you ever wonder why so many PLC manufacturers always quote the scan time for a 1K Boolean program? Simple. Most all programs utilize many Boolean instructions. These are typically very simple instructions designed to join input and output contacts in various series and parallel combinations. Our *Direct*SOFT 5 software is a similar program. It uses graphic symbols to develop a program; therefore, you don't necessarily have to know the instruction mnemonics in order to develop your program. However, knowledge of mnemonics will be helpful, whenever it becomes necessary to troubleshoot a program using a handheld programmer (HPP).

Many of the instructions in this chapter are not program instructions used in *Direct*SOFT 5, but are implied. In other words, they are not actually keyboard commands, however, they can be seen in a Mnemonic View of the program once the *Direct*SOFT 5 program has been developed and accepted (compiled). Each instruction listed in this chapter will have a small chart to indicate how the instruction is used with *Direct*SOFT 5 and the HPP.

DS5	Implied
HPP	Used

The following paragraphs show how these instructions are used to build simple ladder programs.

END Statement

All DL05 programs require an END statement as the last instruction. This tells the CPU that this is the end of the program. Normally, any instructions placed after the END statement will not be executed. There are exceptions to this such as interrupt routines, etc.. This chapter will discuss the instruction set in detail.

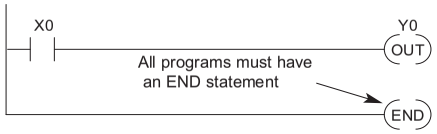

Simple Rungs

You use a contact to start rungs that contain both contacts and coils. The boolean instruction that does this is called a Store or, STR instruction. The output point is represented by the Output or, OUT instruction. The following example shows how to enter a single contact and a single output coil.

Normally Closed Contact

Normally closed contacts are also very common. This is accomplished with the Store Not or, STRN instruction. The following example shows a simple rung with a normally closed contact.

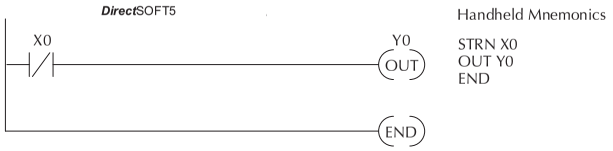

Contacts in Series

Use the AND instruction to join two or more contacts in series. The following example shows two contacts in series and a single output coil. The instructions used would be STR X0, AND X1, followed by OUT Y0.

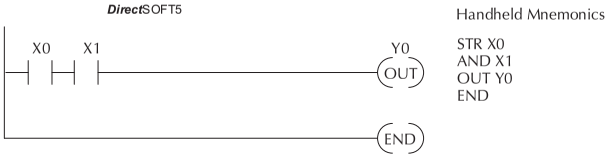

Midline Outputs

Sometimes it is necessary to use midline outputs to get additional outputs that are conditional on other contacts. The following example shows how you can use the AND instruction to continue a rung with more conditional outputs.

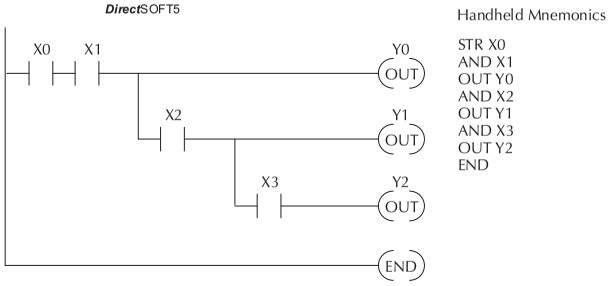

Parallel Elements

You also have to join contacts in parallel. The OR instruction allows you to do this. The following example shows two contacts in parallel and a single output coil. The instructions would be STR X0, OR X1, followed by OUT Y0.

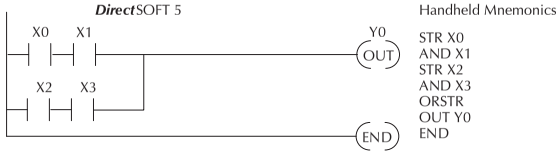

Joining Series Branches in Parallel

Quite often it is necessary to join several groups of series elements in parallel. The Or Store (ORSTR) instruction allows this operation. The following example shows a simple network consisting of series elements joined in parallel.

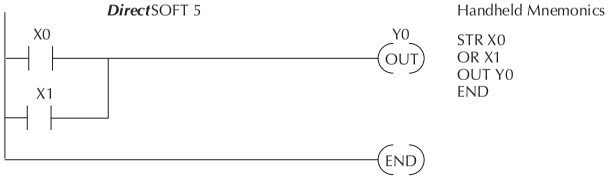

Joining Parallel Branches in Series

You can also join one or more parallel branches in series. The And Store (ANDSTR) instruction allows this operation. The following example shows a simple network with contact branches in series with parallel contacts.

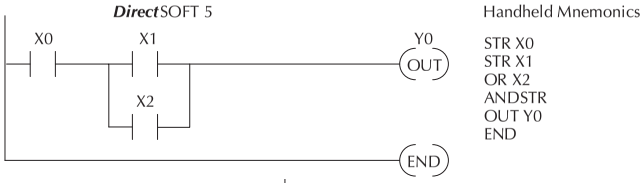

Combination Networks

You can combine the various types of series and parallel branches to solve most any application problem. The following example shows a simple combination network.

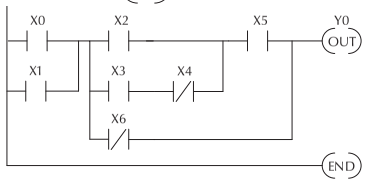

Comparative Boolean

Some PLC manufacturers make it really difficult to do a simple comparison of two numbers. Some of them require you to move the data all over the place before you can actually perform the comparison. The DL05 Micro PLCs provide Comparative Boolean instructions that allow you to quickly and easily solve this problem. The Comparative Boolean provides evaluation of two 4-digit values using boolean contacts. The valid evaluations are: equal to, not equal to, equal to or greater than, and less than.

In the following example when the value in V-memory location V1400 is equal to the constant value 1234, Y3 will energize.

Boolean Stack

There are limits to how many elements you can include in a rung. This is because the DL05 PLCs use an 8-level boolean stack to evaluate the various logic elements. The boolean stack is a temporary storage area that solves the logic for the rung. Each time the program encounters a STR instruction, the instruction is placed on the top of the stack. Any other STR instructions already on the boolean stack are pushed down a level. The ANDSTR, and ORSTR instructions combine levels of the boolean stack when they are encountered. An error will occur during program compilation if the CPU encounters a rung that uses more than the eight levels of the boolean stack.

The following example shows how the boolean stack is used to solve boolean logic.

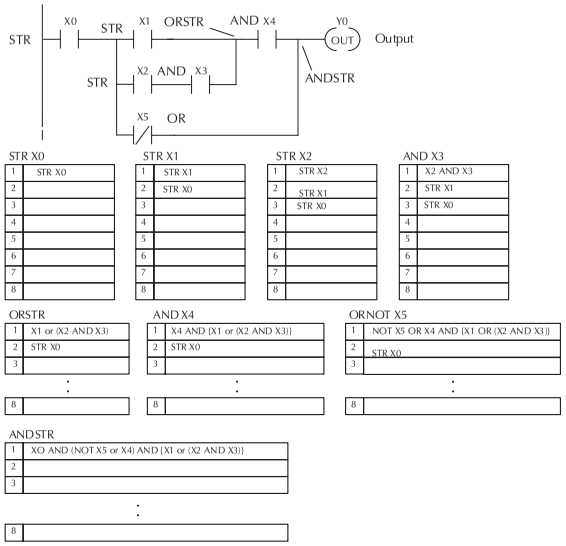

Immediate Boolean

The DL05 Micro PLCs can usually complete an operation cycle in a matter of milliseconds. However, in some applications you may not be able to wait a few milliseconds until the next I/O update occurs. The DL05 PLCs offer Immediate input and outputs which are special boolean instructions that allow reading directly from inputs and writing directly to outputs during the program execution portion of the CPU cycle. You may recall that this is normally done during the input or output update portion of the CPU cycle. The immediate instructions take longer to execute because the program execution is interrupted while the CPU reads or writes the I/O point. This function is not normally done until the read inputs or the write outputs portion of the CPU cycle.

NOTE: Even though the immediate input instruction reads the most current status from the input point, it only uses the results to solve that one instruction. It does not use the new status to update the image register. Therefore, any regular instructions that follow will still use the image register values. Any immediate instructions that follow will access the I/O again to update the status. The immediate output instruction will write the status to the I/O and update the image register.

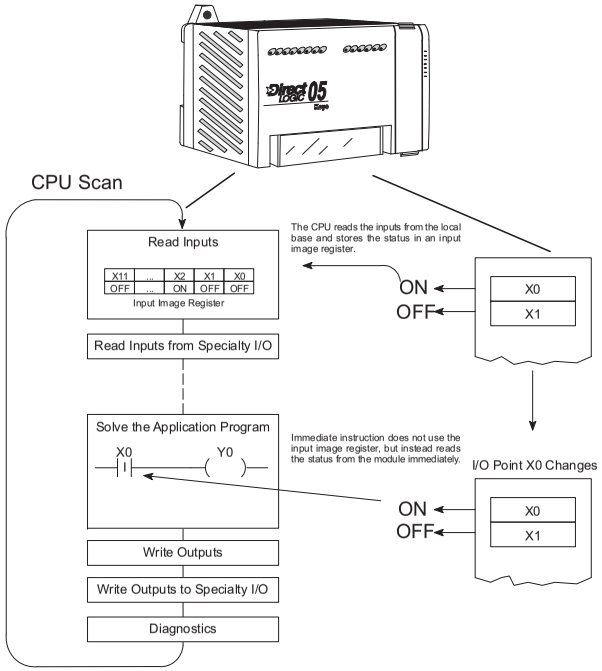

Boolean Instructions

Store (STR)

DS5	Implied
HPP	Used

The Store instruction begins a new rung or an additional branch in a rung with a normally open contact. Status of the contact will be the same state as the associated image register point or memory location.

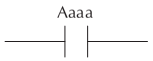

Store Not (STRN)

DS5	Implied
HPP	Used

The Store Not instruction begins a new rung or an additional branch in a rung with a normally closed contact. Status of the contact will be opposite the state of the associated image register point or memory location.

Operand Data Type	DL05 Range
A	aaa
Inputs X	0–377
Outputs Y	0–377
Control Relays C	0–777
Stage S	0–377
Timer T	0–177
Counter C T	0–177
Special Relay SP	0–777

In the following Store example, when input X1 is on, output Y2 will energize.

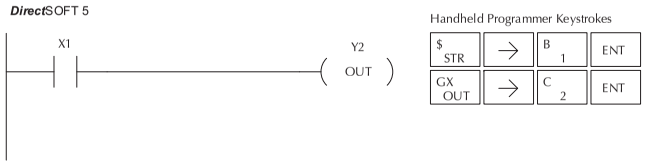

In the following Store Not example, when input X1 is off output Y2 will energize.

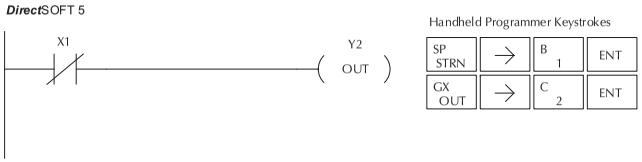

Store Bit-of-Word (STRB)

DS5	Implied
HPP	Used

The Store Bit-of-Word instruction begins a new rung or an additional branch in a rung with a normally open contact. Status of the contact will be the same state as the bit referenced in the associated memory location.

Store Not Bit-of-Word (STRNB)

DS5	Implied
HPP	Used

The Store Not Bit-of-Word instruction begins a new rung or an additional branch in a rung with a normally closed contact. Status of the contact will be opposite the state of the bit referenced in the associated memory location.

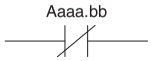

5

Operand Data Type		DL05 Range	
.....	A	aaa	bb
V-memory	B	See memory map	BCD, 0 to 15
Pointer	PB	See memory map	BCD, 0 to 15

In the following Store Bit-of-Word example, when bit 12 of V-memory location V1400 is on, output Y2 will energize.

Handheld Programmer Keystrokes

STR	SHFT	B	→	V	1	4	0	0
→	K	1	2	ENT				
OUT	→	2	ENT					

In the following Store Not Bit-of-Word example, when bit 12 of V-memory location V1400 is off, output Y2 will energize.

Handheld Programmer Keystrokes

STRN	SHFT	B	→	V	1	4	0	0
→	K	1	2	ENT				
OUT	→	2	ENT					

Or (OR)

DS5	Implied
HPP	Used

The Or instruction logically ors a normally open contact in parallel with another contact in a rung. The status of the contact will be the same state as the associated image register point or memory location.

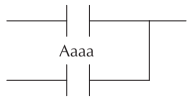

Or Not (ORN)

DS5	Implied
HPP	Used

The Or Not instruction logically ors a normally closed contact in parallel with another contact in a rung. The status of the contact will be opposite the state of the associated image register point or memory location.

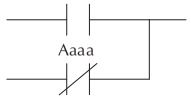

5

Operand Data Type		DL05 Range
.....	A	aaa
Inputs	X	0–377
Outputs	Y	0–377
Control Relays	C	0–777
Stage	S	0–377
Timer	T	0–177
Counter	CT	0–177
Special Relay	SP	0–777

In the following Or example, when input X1 or X2 is on, output Y5 will energize.

Handheld Programmer Keystrokes

$ STR	→	B 1	ENT
Q OR	→	C 2	ENT
GX OUT	→	F 5	ENT

In the following Or Not example, when input X1 is on or X2 is off, output Y5 will energize.

Handheld Programmer Keystrokes

$ STR	→	B 1	ENT
R ORN	→	C 2	ENT
GX OUT	→	F 5	ENT

Or Bit-of-Word (ORB)

DS5	Implied
HPP	Used

The Or Bit-of-Word instruction logically ors a normally open contact in parallel with another contact in a rung. Status of the contact will be the same state as the bit referenced in the associated memory location.

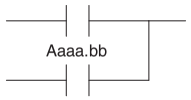

Or Not Bit-of-Word (ORNB)

DS5	Implied
HPP	Used

The Or Not Bit-of-Word instruction logically ors a normally closed contact in parallel with another contact in a rung. Status of the contact will be opposite the state of the bit referenced in the associated memory location.

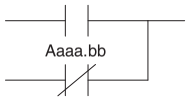

5

Operand Data Type		DL05 Range	
.....	A	aaa	bb
V-memory.....	B	See memory map	BCD, 0 to 15
Pointer	PB	See memory map	BCD, 0 to 15

In the following Or Bit-of-Word example, when input X1 or bit 7 of V1400 is on, output Y7 will energize.

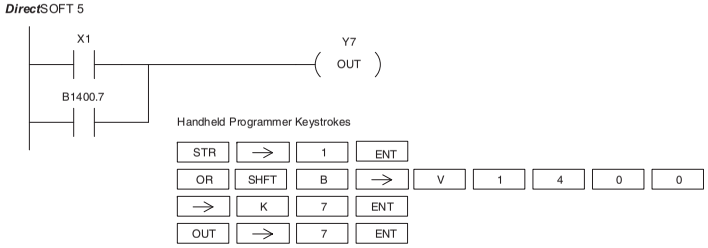

In the following Or Bit-of-Word example, when input X1 is on or bit 7 of V1400 is off, output Y7 will energize.

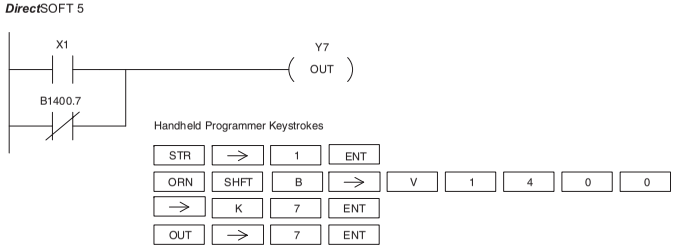

And (AND)

DS5	Implied
HPP	Used

The And instruction logically ands a normally open contact in series with another contact in a rung. The status of the contact will be the same state as the associated image register point or memory location.

And Not (ANDN)

DS5	Implied
HPP	Used

The And Not instruction logically ands a normally closed contact in series with another contact in a rung. The status of the contact will be opposite the state of the associated image register point or memory location.

5

Operand Data Type		DL05 Range
.....	A	aaa
Inputs	X	0–377
Outputs	Y	0–377
Control Relays	C	0–777
Stage	S	0–377
Timer	T	0–177
Counter	CT	0–177
Special Relay	SP	0–777

In the following And example, when input X1 and X2 are on output Y5 will energize.

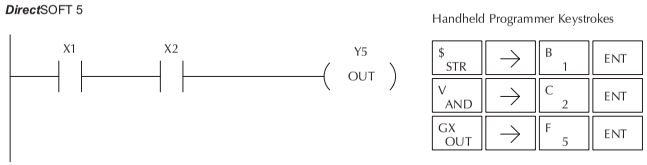

In the following And Not example, when input X1 is on and X2 is off output Y5 will energize.

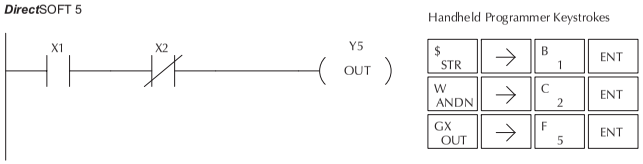

And Bit-of-Word (ANDB)

DS5	Implied
HPP	Used

The And Bit-of-Word instruction logically ands a normally open contact in series with another contact in a rung. The status of the contact will be the same state as the bit referenced in the associated memory location.

And Not Bit-of-Word (ANDNB)

DS5	Implied
HPP	Used

The And Not Bit-of-Word instruction logically ands a normally closed contact in series with another contact in a rung. The status of the contact will be opposite the state of the bit referenced in the associated memory location.

5

Operand Data Type		DL05 Range	
.....	A	aaa	bb
V-memory.....	B	See memory map	BCD, 0 to 15
Pointer	PB	See memory map	BCD, 0 to 15

In the following And Bit-of-Word example, when input X1 and bit 4 of V1400 is on output Y5 will energize.

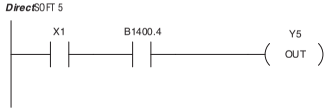

Handheld Programmer Keystrokes

STR	→	1	ENT					
AND	SHFT	B	→	V	1	4	0	0
→	K	4	ENT					
OUT	→	5	ENT					

In the following And Not Bit-of-Word example, when input X1 is on and bit 4 of V1400 is off output Y5 will energize.

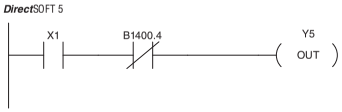

Handheld Programmer Keystrokes

STR	→	1	ENT					
ANDN	SHFT	B	→	V	1	4	0	0
→	K	4	ENT					
OUT	→	5	ENT					

And Store (AND STR)

DS5	Implied
HPP	Used

The And Store instruction logically ands two branches of a rung in series. Both branches must begin with the Store instruction.

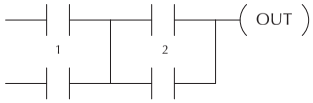

Or Store (OR STR)

DS5	Implied
HPP	Used

The Or Store instruction logically ors two branches of a rung in parallel. Both branches must begin with the Store instruction.

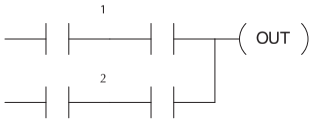

5

In the following And Store example, the branch consisting of contacts X2, X3, and X4 have been anded with the branch consisting of contact X1.

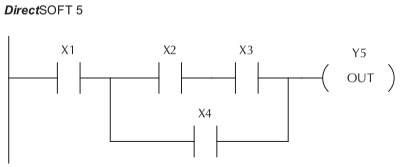

Handheld Programmer Keystrokes

$ STR	→	B 1	ENT
$ STR	→	C 2	ENT
V AND	→	D 3	ENT
Q OR	→	E 4	ENT
L ANDST	ENT		
GX OUT	→	F 5	ENT

In the following Or Store example, the branch consisting of X1 and X2 have been ored with the branch consisting of X3 and X4.

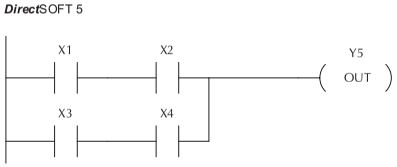

Handheld Programmer Keystrokes

$ STR	→	B 1	ENT
V AND	→	C 2	ENT
$ STR	→	D 3	ENT
V AND	→	E 4	ENT
M ORST	ENT		
GX OUT	→	F 5	ENT

Out (OUT)

DS5	Used
HPP	Used

The Out instruction reflects the status of the rung (on/off) and outputs the discrete (on/off) state to the specified image register point or memory location.

Aaaa
—(OUT)

Multiple Out instructions referencing the same discrete location should not be used since only the last Out instruction in the program will control the physical output point. Instead, use the next instruction, the Or Out.

Operand Data Type	DL05 Range
..... A	aaa
Inputs X	0–377
Outputs ..... Y	0–377
Control Relays C	0–777

In the following Out example, when input X1 is on, output Y2 and Y5 will energize.

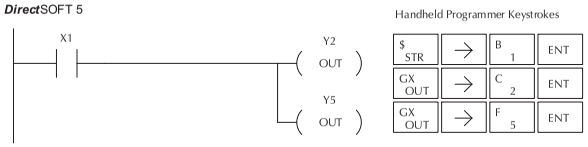

Or Out (OROUT)

DS5	Used
HPP	Used

The Or Out instruction allows more than one rung of discrete logic to control a single output. Multiple Or Out instructions referencing the same output coil may be used, since *all* contacts controlling the output are logically ORed together. If the status of *any* rung is on, the output will also be on.

A aaa
—(OR OUT)

Operand Data Type	DL05 Range
..... A	aaa
Inputs X	0–177
Outputs ..... Y	0–177
Control Relays C	0–777

In the following example, when X1 or X4 is on, Y2 will energize.

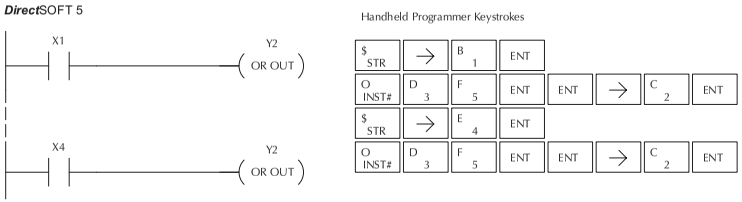

Out Bit-of-Word (OUTB)

DS5	Used
HPP	Used

The Out Bit-of-Word instruction reflects the status of the rung (on/off) and outputs the discrete (on/off) state to the specified bit in the referenced memory location. Multiple Out Bit-of-Word instructions referencing the same bit of the same word generally should not be used since only the last Out instruction in the program will control the status of the bit.

Aaaa.bb
—(OUT)

Operand Data Type	DL05 Range	
..... A	aaa	bb
V-memory ..... B	See memory map	BCD, 0 to 15
Pointer ..... PB	See memory map	BCD, 0 to 15

In the following Out Bit-of-Word example, when input X1 is on, bit 3 of V1400 and bit 6 of V1401 will turn on.

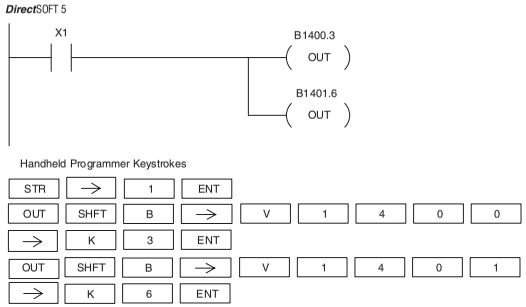

The following Out Bit-of-Word example contains two Out Bit-of-Word instructions using the same bit in the same memory word. The final state bit 3 of V1400 is ultimately controlled by the last rung of logic referencing it. X1 will override the logic state controlled by X0. To avoid this situation, multiple outputs using the same location must not be used in programming.

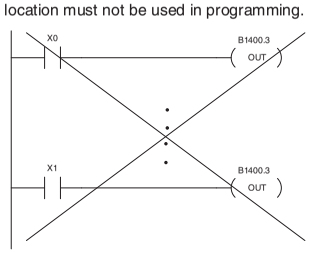

Not (NOT)

DS5	Used
HPP	Used

The Not instruction inverts the status of the rung at the point of the instruction.

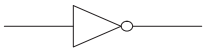

In the following example when X1 is off, Y2 will energize. This is because the Not instruction inverts the status of the rung at the Not instruction.

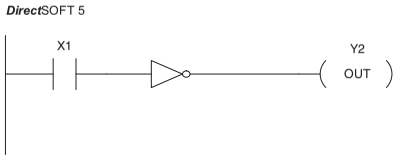

Handheld Programmer Keystrokes

$ STR	→	B 1	ENT	
SHFT	N TMR	O INST#	T MLR	ENT
GX OUT	→	C 2	ENT	

*NOTE: **Direct**SOFT Release 1.1i and later supports the use of the NOT instruction. The above example rung is merely intended to show the visual representation of the NOT instruction. The rung cannot be created or displayed in **Direct**SOFT versions earlier than 1.1i.*

Positive Differential (PD)

DS5	Used
HPP	Used

The Positive Differential instruction is typically known as a one shot. When the input logic produces an off to on transition, the output will energize for one CPU scan.

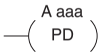

Operand Data Type	DL05 Range
..... A	aaa
Inputs X	0–377
Outputs ..... Y	0–377
Control Relays C	0–777

In the following example, every time X1 makes an off to on transition, C0 will energize for one scan.

Handheld Programmer Keystrokes

$ STR	→	B 1	ENT		
SHFT	P CV	SHFT	D 3	→	A 0

Store Positive Differential (STRPD)

DS5	Used
HPP	Used

The Store Positive Differential instruction begins a new rung or an additional branch in a rung with a normally open contact. The contact closes for one CPU scan when the state of the associated image register point makes an Off-to-On transition. Thereafter, the contact remains open until the next Off-to-On transition (the symbol inside the contact represents the transition). This function is sometimes called a "one-shot". This contact will also close on a program-to-run transition if it is within a retentative range and on before the PLC mode transition.

Store Negative Differential (STRND)

DS5	Used
HPP	Used

The Store Negative Differential instruction begins a new rung or an additional branch in a rung with a normally closed contact. The contact closes for one CPU scan when the state of the associated image register point makes an On-to-Off transition. Thereafter, the contact remains open until the next On-to-Off transition (the symbol inside the contact represents the transition).

Operand Data Type	DL05 Range
..... A	aaa
Inputs X	0–377
Outputs ..... Y	0–377
Control Relays C	0–777
Stage ..... S	0–377
Timer ..... T	0–177
Counter ..... CT	0–177

In the following example, each time X1 is makes an Off-to-On transition, Y4 will energize for one scan.

Handheld Programmer Keystrokes

$ STR	SHFT	P CV	D 3	→	B 1	ENT
GX OUT	→	E 4	ENT			

In the following example, each time X1 is makes an On-to-Off transition, Y4 will energize for one scan.

Handheld Programmer Keystrokes

$ STR	SHFT	N TMR	D 3	→	B 1	ENT
GX OUT	→	E 4	ENT			

Or Positive Differential (ORPD)

DS5	Implied
HPP	Used

The Or Positive Differential instruction logically ors a contact in parallel with another contact in a rung. The status of the contact will be open until the associated image register point makes an Off-to-On transition, closing it for one CPU scan. Thereafter, it remains open until another Off-to-On transition.

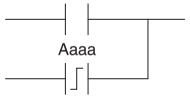

Or Negative Differential (ORND)

DS5	Implied
HPP	Used

The Or Negative Differential instruction logically ors a contact in parallel with another contact in a rung. The status of the contact will be open until the associated image register point makes an On-to-Off transition, closing it for one CPU scan. Thereafter, it remains open until another On-to-Off transition.

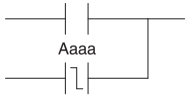

Operand Data Type	DL05 Range
A	aaa
Inputs X	0–377
Outputs Y	0–377
Control Relays C	0–777
Stage S	0–377
Timer T	0–177
Counter CT	0–177

In the following example, Y 5 will energize whenever X1 is on, or for one CPU scan when X2 transitions from Off to On.

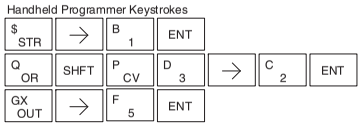

In the following example, Y 5 will energize whenever X1 is on, or for one CPU scan when X2 transitions from On to Off.

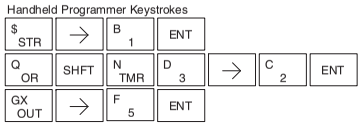

And Positive Differential (ANDPD)

DS5	Implied
HPP	Used

The And Positive Differential instruction logically ands a contact in series with another contact in a rung. The status of the contact will be open until the associated image register point makes an Off-to-On transition, closing it for one CPU scan. Thereafter, it remains open until another Off-to-On transition.

And Negative Differential (ANDND)

DS5	Implied
HPP	Used

The And Negative Differential instruction logically ands a contact in series with another contact in a rung. The status of the contact will be open until the associated image register point makes an On-to-Off transition, closing it for one CPU scan. Thereafter, it remains open until another On-to-Off transition.

Operand Data Type	DL05 Range
A	aaa
Inputs X	0–377
Outputs Y	0–377
Control Relays C	0–777
Stage S	0–377
Timer T	0–177
Counter CT	0–177

In the following example, Y5 will energize for one CPU scan whenever X1 is on and X2 transitions from Off to On.

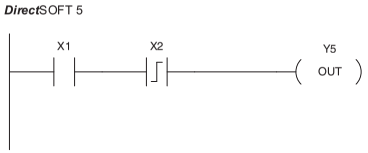

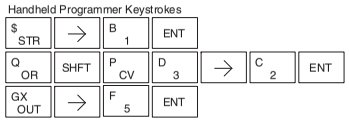

In the following example, Y5 will energize for one CPU scan whenever X1 is on and X2 transitions from On to Off.

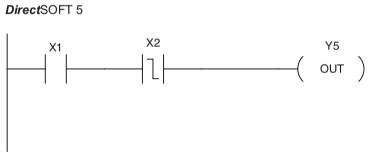

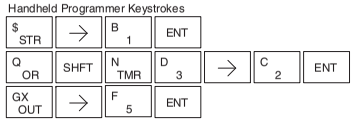

Set (SET)

DS5	Used
HPP	Used

The Set instruction sets or turns on an image register point/memory location or a consecutive range of image register points/memory locations. Once the point/location is set it will remain on until it is reset using the Reset instruction. It is not necessary for the input controlling the Set instruction to remain on.

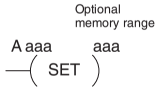

Reset (RST)

DS5	Used
HPP	Used

The Reset instruction resets or turns off an image register point/memory location or a range of image registers points/memory locations. Once the point/location is reset it is not necessary for the input to remain on.

5

Operand Data Type	DL05 Range
..... A	aaa
Inputs X	0–377
Outputs ..... Y	0–377
Control Relays C	0–777
Stage ..... S	0–377
Timer ..... T	0–177
Counter ..... CT	0–177

In the following example when X1 is on, Y2 through Y5 will energize.

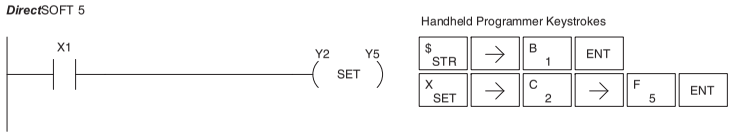

In the following example when X1 is on, Y2 through Y5 will be reset or de–energized.

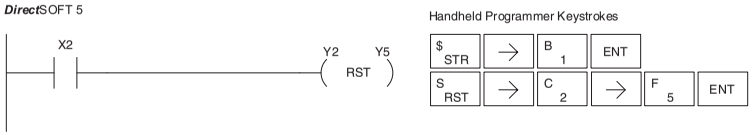

Set Bit-of-Word (SETB)

DS5	Used
HPP	Used

The Set Bit-of-Word instruction sets or turns on a bit in a V-memory location. Once the bit is set it will remain on until it is reset using the Reset Bit-of-Word instruction. It is not necessary for the input controlling the Set Bit-of-Word instruction to remain on.

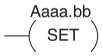

Reset Bit-of-Word (RSTB)

DS5	Used
HPP	Used

The Reset Bit-of-Word instruction resets or turns off a bit in a V-memory location. Once the bit is reset it is not necessary for the input to remain on.

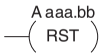

5

Operand Data Type	DL05 Range	
..... A	aaa	bb
V-memory ..... B	See memory map	BCD, 0 to 15
Pointer ..... PB	See memory map	BCD, 0 to 15

In the following example when X1 turns on, bit 1 in V1400 is set to the on state.

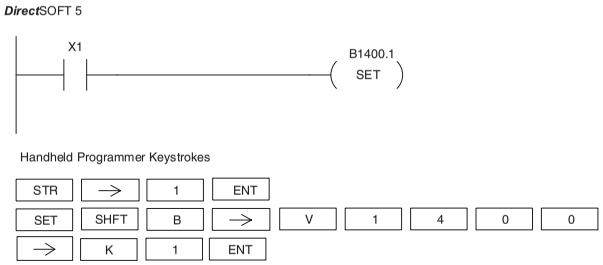

In the following example when X2 turns on, bit 1 in V1400 is reset to the off state.

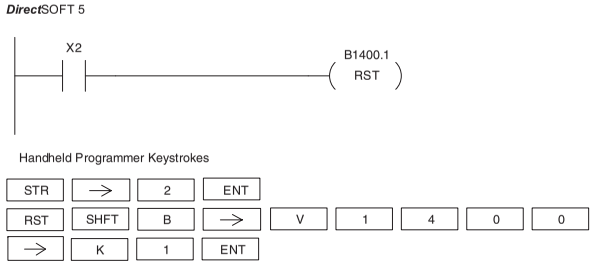

Pause (PAUSE)

DS5	Used
HPP	Used

The Pause instruction disables the output update on a range of outputs. The ladder program will continue to run and update the image register. However, the outputs in the range specified in the Pause instruction will be turned off at the output points.

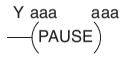

Operand Data Type	DL05 Range
	aaa
Outputs ..... Y	0–377

In the following example, when X1 is ON, Y5-Y7 will be turned OFF. The execution of the ladder program will not be affected.

*Direct*SOFT 5

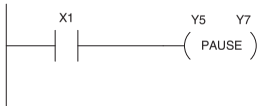

Since the D2–HPP Handheld Programmer does not have a specific Pause key, you can use the corresponding instruction number for entry (#960), or type each letter of the command.

Handheld Programmer Keystrokes

In some cases, you may want certain output points in the specified pause range to operate normally. In that case, use Aux 58 to over-ride the Pause instruction.

Comparative Boolean

Store If Equal (STRE)

DS5	Used
HPP	Used

The Store If Equal instruction begins a new rung or additional branch in a rung with a normally open comparative contact. The contact will be on when Vaaa is equal toBbbb .

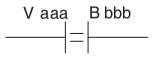

Store If Not Equal (STRNE)

DS5	Used
HPP	Used

The Store If Not Equal instruction begins a new rung or additional branch in a rung with a normally closed comparative contact. The contact will be on when Vaaa does not equal Bbbb.

Operand Data Type	DL05 Range	
..... B	aaa	bbb
V-memory V	All (See page 3–28)	All (See page 3–28)
Pointer ..... P	All (See page 3–28)	All (See page 3–28)
Constant ..... K	—	0–9999

In the following example, when the value in V-memory location V2000 = 4933, Y3 will energize.

*Direct*SOFT 5

Handheld Programmer Keystrokes

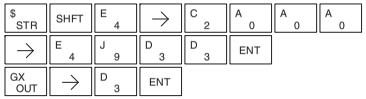

In the following example, when the value in V-memory location V2000 is not equal to 5060, Y3 will energize.

*Direct*SOFT 5

Handheld Programmer Keystrokes

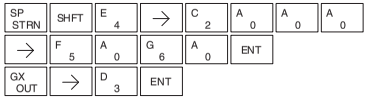

Or If Equal (ORE)

DS5	Implied
HPP	Used

The Or If Equal instruction connects a normally open comparative contact in parallel with another contact. The contact will be on when Vaaa is equal to Bbbb.

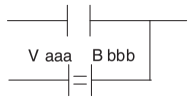

Or If Not Equal (ORNE)

DS5	Implied
HPP	Used

The Or If Not Equal instruction connects a normally closed comparative contact in parallel with another contact. The contact will be on when Vaaa does not equal Bbbb.

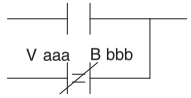

5

Operand Data Type	DL05 Range	
..... B	aaa	bbb
V-memory V	All (See page 3–28)	All (See page 3–28)
Pointer ..... P	All (See page 3–28)	All (See page 3–28)
Constant ..... K	—	0–9999

In the following example, when the value in V-memory location V2000 = 4500 or V2002 = 2345 , Y3 will energize.

*Direct*SOFT 5

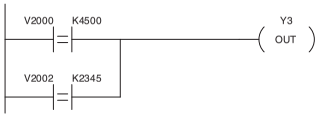

Handheld Programmer Keystrokes

$ STR	SHFT	E 4	→	C 2	A 0	A 0	A 0	→
E 4	F 5	A 0	A 0	ENT				
Q OR	SHFT	E 4	→	C 2	A 0	A 0	C 2	→
C 2	D 3	E 4	F 5	ENT				
GX OUT	→	D 3	ENT					

In the following example, when the value in V-memory location V2000 = 3916 or V2002 is not equal to 050, Y3 will energize.

*Direct*SOFT 5

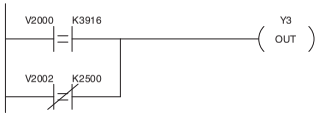

Handheld Programmer Keystrokes

$ STR	SHFT	E 4	→	C 2	A 0	A 0	A 0	→
D 3	J 9	B 1	G 6	ENT				
R ORN	SHFT	E 4	→	C 2	A 0	A 0	C 2	→
C 2	F 5	A 0	A 0	ENT				
GX OUT	→	D 3	ENT					

And If Equal (ANDE)

DS5	Implied
HPP	Used

The And If Equal instruction connects a normally open comparative contact in series with another contact. The contact will be on when Vaaa is equal to Bbbb.

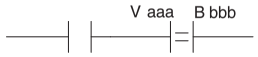

And If Not Equal (ANDNE)

DS5	Implied
HPP	Used

The And If Not Equal instruction connects a normally closed comparative contact in series with another contact. The contact will be on when Vaaa does not equal Bbbb

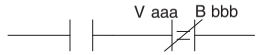

5

Operand Data Type	DL05 Range	
..... A/B	aaa	bbb
V-memory V	All (See page 3–28)	All (See page 3–28)
Pointer ..... P	All (See page 3–28)	All (See page 3–28)
Constant ..... K	—	0–9999

In the following example, when the value in V-memory location V2000 = 5000 and V2002 = 2345, Y3 will energize.

*Direct*SOFT 5

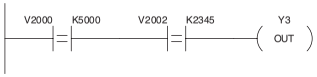

Handheld Programmer Keystrokes

$ STR	SHFT	E 4	→	C 2	A 0	A 0	A 0	→
F 5	A 0	A 0	A 0	ENT				
V AND	SHFT	E 4	→	C 2	A 0	A 0	C 2	→
C 2	D 3	E 4	F 5	ENT				
GX OUT	→	D 3	ENT					

In the following example, when the value in V-memory location V2000 = 2550 and V2002 does not equal 050, Y3 will energize.

*Direct*SOFT 5

Handheld Programmer Keystrokes

$ STR	SHFT	E 4	→	C 2	A 0	A 0	A 0	→
F 5	A 0	A 0	A 0	ENT				
V AND	SHFT	E 4	→	C 2	A 0	A 0	C 2	→
C 2	D 3	E 4	F 5	ENT				
GX OUT	→	D 3	ENT					

Store (STR)

DS5	Used
HPP	Used

The Comparative Store instruction begins a new rung or additional branch in a rung with a normally open comparative contact. The contact will be on when Aaaa is equal to or greater than Bbbb.

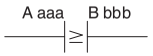

Store Not (STRN)

DS5	Used
HPP	Used

The Comparative Store Not instruction begins a new rung or additional branch in a rung with a normally closed comparative contact. The contact will be on when Aaaa is less than Bbbb.

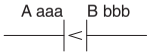

5

Operand Data Type	DL05 Range	
..... A/B	aaa	bbb
V-memory V	All (See page 3–28)	All (See page 3–28)
Pointer ..... p	All (See page 3–28)	All (See page 3–28)
Constant ..... K	—	0–9999
Timer ..... T	0–177	
Counter ..... CT	0–177	

In the following example, when the value in V-memory location V2000 ≥ 1000, Y3 will energize.

DirectSOFT 5

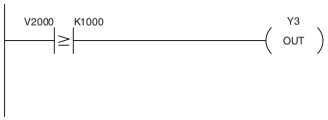

Handheld Programmer Keystrokes

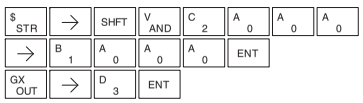

In the following example, when the value in V-memory location V2000 < 4050, Y3 will energize.

DirectSOFT 5

Handheld Programmer Keystrokes

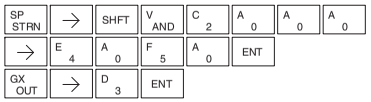

Or (OR)

DS5	Implied
HPP	Used

The Comparative Or instruction connects a normally open comparative contact in parallel with another contact. The contact will be on when Aaaa is equal to or greater than Bbbb.

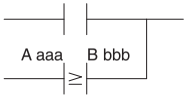

Or Not (ORN)

DS5	Implied
HPP	Used

The Comparative Or Not instruction connects a normally open comparative contact in parallel with another contact. The contact will be on when Aaaa is less than Bbbb.

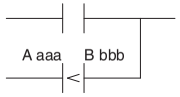

5

Operand Data Type	DL05 Range	
..... A/B	aaa	bbb
V-memory V	All (See page 3–28)	All (See page 3–28)
Pointer ..... p	All (See page 3–28)	All (See page 3–28)
Constant ..... K	—	0–9999
Timer ..... T	0–177	
Counter ..... CT	0–177	

In the following example, when the value in V-memory location V2000 = 6045 or V2002 ≥ 2345, Y3 will energize.

DirectSOFT 5

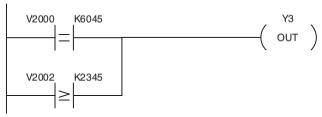

Handheld Programmer Keystrokes

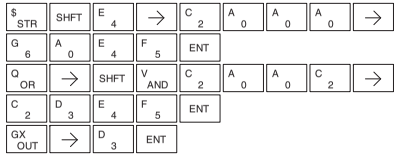

In the following example when the value in V-memory location V2000 = 1000 or V2002 < 050, Y3 will energize.

DirectSOFT 5

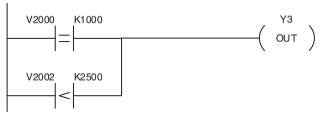

Handheld Programmer Keystrokes

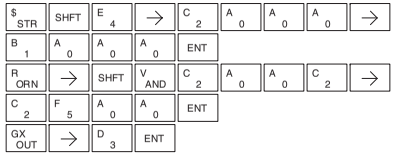

And (AND)

DS5	Implied
HPP	Used

The Comparative And instruction connects a normally open comparative contact in series with another contact. The contact will be on when Aaaa is equal to or greater than Bbbb.

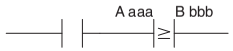

And Not (ANDN)

DS5	Implied
HPP	Used

The Comparative And Not instruction connects a normally open comparative contact in parallel with another contact. The contact will be on when Aaaa is less than Bbbb.

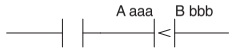

5

Operand Data Type	DL05 Range	
A/B	aaa	bbb
V-memory V	All (See page 3–28)	All (See page 3–28)
Pointer p	All (See page 3–28)	All (See page 3–28)
Constant K	—	0–9999
Timer T	0–177	
Counter CT	0–177	

In the following example, when the value in V-memory location V2000 = 5000, and V2002 ≥ 2345, Y3 will energize.

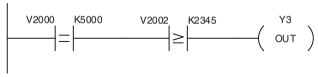

Handheld Programmer Keystrokes

$ STR	SHFT	E 4	→	C 2	A 0	A 0	A 0	→
F 5	A 0	A 0	A 0	ENT				
V AND	→	SHFT	V AND	C 2	A 0	A 0	C 2	→
C 2	D 3	E 4	F 5	ENT				
GX OUT	→	D 3	ENT					

In the following example, when the value in V-memory location V2000 = 7000 and V2002 < 050, Y3 will energize.

Handheld Programmer Keystrokes

$ STR	SHFT	E 4	→	C 2	A 0	A 0	A 0	→
H 7	A 0	A 0	A 0	ENT				
W ANDN	→	SHFT	V AND	C 2	A 0	A 0	C 2	→
C 2	F 5	A 0	A 0	ENT				
GX OUT	→	D 3	ENT					

Immediate Instructions

Store Immediate (STRI)

DS5	Used
HPP	Used

The Store Immediate instruction begins a new rung or additional branch in a rung. The status of the contact will be the same as the status of the associated input point *at the time the instruction is executed*. The image register is not updated.

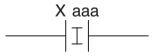

Store Not Immediate (STRNI)

DS5	Used
HPP	Used

The Store Not Immediate instruction begins a new rung or additional branch in a rung. The status of the contact will be opposite the status of the associated input point *at the time the instruction is executed*. The image register is not updated.

5

Operand Data Type	DL05 Range
	aaa
Inputs X	0–377

In the following example when X1 is on, Y2 will energize.

Handheld Programmer Keystrokes

$ STR	SHFT	I 8	→	B 1	ENT
GX OUT	→	C 2	ENT		

In the following example when X1 is off, Y2 will energize.

Handheld Programmer Keystrokes

SP STRN	SHFT	I 8	→	B 1	ENT
GX OUT	→	C 2	ENT		

Or Immediate (ORI)

DS5	Implied
HPP	Used

The Or Immediate connects two contacts in parallel. The status of the contact will be the same as the status of the associated input point *at the time the instruction is executed*. The image register is not updated.

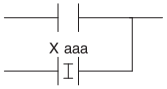

Or Not Immediate (ORNI)

DS5	Implied
HPP	Used

The Or Not Immediate connects two contacts in parallel. The status of the contact will be opposite the status of the associated input point *at the time the instruction is executed*. The image register is not updated.

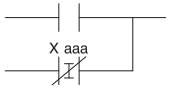

OR Immediate Instructions (cont'd)

Operand Data Type	DL05 Range
	aaa
Inputs X	0–377

In the following example, when X1 or X2 is on, Y5 will energize.

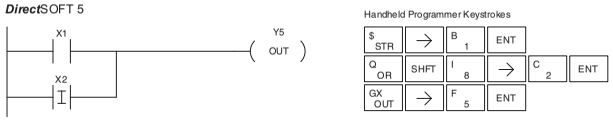

In the following example, when X1 is on or X2 is off, Y5 will energize.

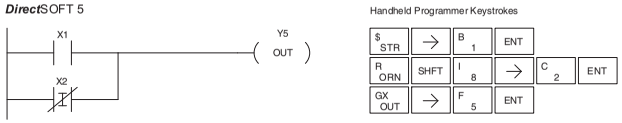

And Immediate (ANDI)

DS5	Implied
HPP	Used

The And Immediate connects two contacts in series. The status of the contact will be the same as the status of the associated input point *at the time the instruction is executed*. The image register is not updated.

And Not Immediate (ANDNI)

DS5	Implied
HPP	Used

The And Not Immediate connects two contacts in series. The status of the contact will be opposite the status of the associated input point *at the time the instruction is executed*. The image register is not updated.

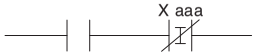

Operand Data Type	DL05 Range
	aaa
Inputs X	0–377

In the following example, when X1 and X2 are on, Y5 will energize.

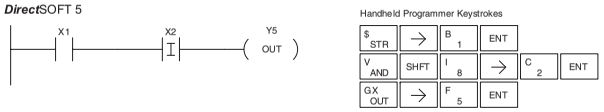

In the following example, when X1 is on and X2 is off, Y5 will energize.

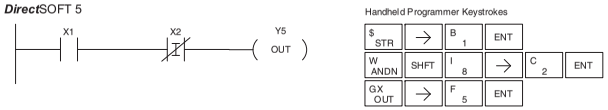

Out Immediate (OUTI)

DS5	Used
HPP	Used

The Out Immediate instruction reflects the status of the rung (on/off) and outputs the discrete (on/off) status to the specified module output point and the image register *at the time the instruction is executed*. If multiple Out Immediate instructions referencing the same discrete point are used it is possible for the module output status to change multiple times in a CPU scan. See Or Out Immediate.

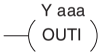

Or Out Immediate (OROUTI)

DS5	Used
HPP	Used

The Or Out Immediate instruction has been designed to use more than 1 rung of discrete logic to control a single output. Multiple Or Out Immediate instructions referencing the same output coil may be used, since all contacts controlling the output are ored together. If the status of any rung is on *at the time the instruction is executed*, the output will also be on.

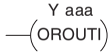

Operand Data Type	DL05 Range
	aaa
Outputs ..... Y	0–377

In the following example, when X1 is on, output point Y2 on the output module will turn on. For instruction entry on the Handheld Programmer, you can use the instruction number (#350) as shown, or type each letter of the command.

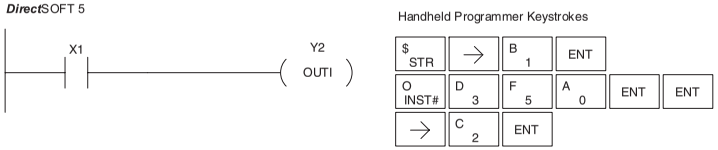

In the following example, when X1 or X4 is on, Y2 will energize.

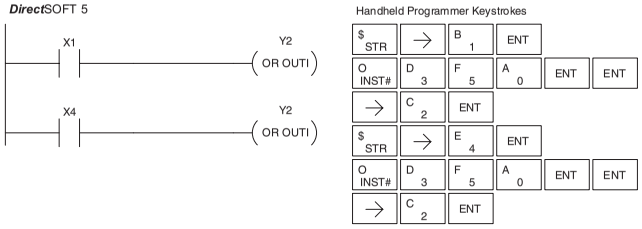

Set Immediate (SETI)

DS5	Used
HPP	Used

The Set Immediate instruction immediately sets, or turns on an output or a range of outputs in the image register and the corresponding output point(s) *at the time the instruction is executed*. Once the outputs are set it is not necessary for the input to remain on. The Reset Immediate instruction can be used to reset the outputs.

Y aaa aaa
—(SETI)

Reset Immediate (RSTI)

5

DS5	Used
HPP	Used

The Reset Immediate instruction immediately resets, or turns off an output or a range of outputs in the image register and the output point(s) *at the time the instruction is executed*. Once the outputs are reset it is not necessary for the input to remain on.

Y aaa aaa
—(RSTI)

Operand Data Type	DL05 Range
	aaa
Outputs ..... Y	0–377

In the following example, when X1 is on, Y2 through Y5 will be set on in the image register and on the corresponding output points.

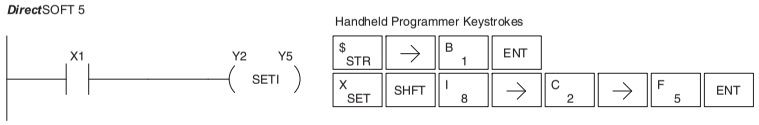

In the following example, when X1 is on, Y5 through Y22 will be reset (off) in the image register and on the corresponding output module(s).

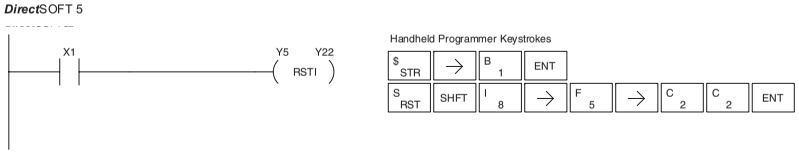

Timer, Counter and Shift Register Instructions

Using Timers

Timers are used to time an event for a desired length of time. The single input timer will time as long as the input is on. When the input changes from on to off the timer current value is reset to 0. There is a tenth of a second and a hundredth of a second timer available with a maximum time of 999.9 and 99.99 seconds respectively. There is a discrete bit associated with each timer to indicate that the current value is equal to or greater than the preset value. The timing diagram below shows the relationship between the timer input, associated discrete bit, current value, and timer preset.

5

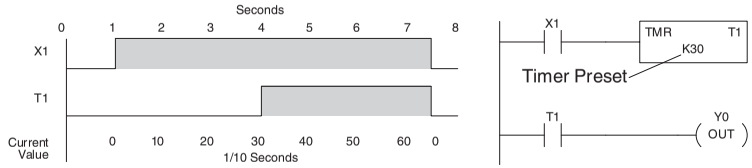

There are those applications that need an accumulating timer, meaning it has the ability to time, stop, and then resume from where it previously stopped. The accumulating timer works similarly to the regular timer, but two inputs are required. The start/stop input starts and stops the timer. When the timer stops, the elapsed time is maintained. When the timer starts again, the timing continues from the elapsed time. When the reset input is turned on, the elapsed time is cleared and the timer will start at 0 when it is restarted. There is a tenth of a second and a hundredth of a second timer available with a maximum time of 9999999.9 and 999999.99 seconds respectively. The timing diagram below shows the relationship between the timer input, timer reset, associated discrete bit, current value, and timer preset.

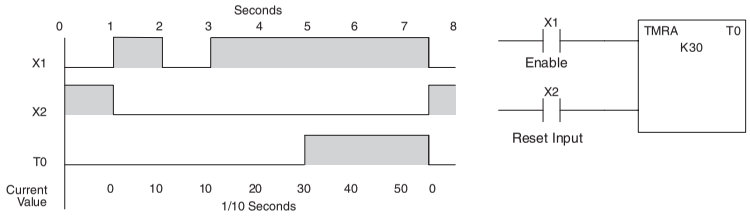

Timer (TMR) and Timer Fast (TMRF)

DS5	Used
HPP	Used

The Timer instruction is a 0.1 second single input timer that times to a maximum of 999.9 seconds. The Timer Fast instruction is a 0.01 second single input timer that times up to a maximum of 99.99 seconds. These timers will be enabled if the input logic is true (on) and will be reset to 0 if the input logic is false (off).

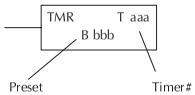

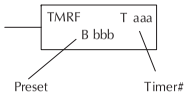

The timer discrete status bit and the current value are not specified in the timer instruction

Instruction Specifications

Timer Reference (Taaa): Specifies the timer number.

Preset Value (Bbbb): Constant value (K) or a V-memory location.

Current Value: Timer current values (BCD) are accessed by referencing the associated V or T memory location*. For example, the timer current value for T3 physically resides in V-memory location V3 as a BCD value.

Discrete Status Bit: The discrete status bit is referenced by the associated T memory location. Operating as a "timer done bit", it will be on if the current value is equal to or greater than the preset value. For example, the discrete status bit for Timer 2 is TA2.

NOTE: Timer preset constants (K) may be changed by using a handheld programmer, even when the CPU is in Run Mode. Therefore, a V-memory preset is required only if the ladder program must change the preset.

Operand Data Type	DL05 Range	
..... A/B	aaa	bbb
Timers ..... T	0–177	—
V-memory for preset values V	—	1200–7377 7400–7577*
Pointers (preset only) ..... P	—	1200–7377 7400–7577
Constants (preset only) ..... K	—	0–9999
Timer discrete status bits ..... T/V	0–177 or V41100–41107	
Timer current values ..... V /T**	0–177	

*NOTE: * May be non-volatile if MOV instruction is used.*
*** With the HPP, both the Timer discrete status bits and current value are accessed with the same data reference. **Direct**SOFT 5 uses separate references, such as "T2" for discrete status bit for Timer T2, and "TA2" for the current value of Timer T2.*

You can perform functions when the timer reaches the specified preset using the discrete status bit. Or, use comparative contacts to perform functions at different time intervals, based on one timer. The examples on the following page show these two methods of programming timers.

Timer Example Using Discrete Status Bits

In the following example, a single input timer is used with a preset of 3 seconds. The timer discrete status bit (T2) will turn on when the timer has timed for 3 seconds. The timer is reset when X1 turns off, turns off the discrete status bit and resets the timer current value to 0.

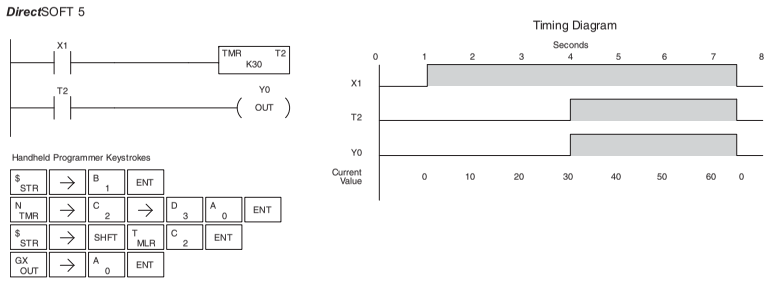

Timer Example Using Comparative Contacts

In the following example, a single input timer is used with a preset of 4.5 seconds. Comparative contacts are used to energize Y3, Y4, and Y5 at one second intervals respectively. When X1 is turned off the timer will be reset to 0 and the comparative contacts will turn off Y3, Y4, and Y5.

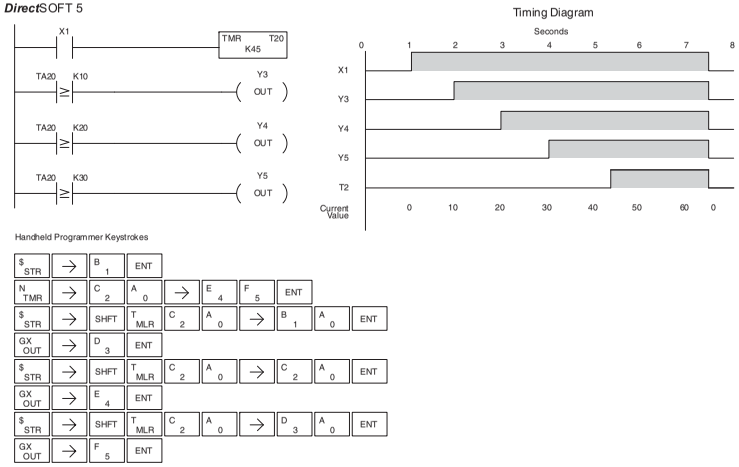

Accumulating Timer (TMRA)

DS5	Used
HPP	Used

The Accumulating Timer is a 0.1 second two input timer that will time to a maximum of 9999999.9.

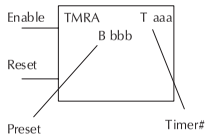

Accumulating Fast Timer (TMRAF)

DS5	Used
HPP	Used

The Accumulating Fast Timer is a 0.01 second two-input timer that will time to a maximum of 99999.99. *Each one uses two timer registers in V-memory.* These timers have two inputs, an enable and a reset. The timer starts timing when the enable is on and stops when the enable is off (without resetting the count). The reset will reset the timer when on and allow the timer to time when off.

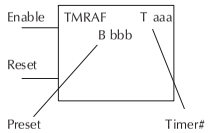

The timer discrete status bit and the current value are not specified in the timer instruction

5

Instruction Specifications

Timer Reference (Taaa): Specifies the timer number.

Preset Value (Bbbb): Constant value (K) or a V-memory location.

Current Value: Timer current values (BCD) are accessed by referencing the associated V or T memory location*. For example, the timer current value for T3 resides in V-memory location V3 as a BCD value.

Discrete Status Bit: The discrete status bit is accessed by referencing the associated T memory location. Operating as a "timer done bit", it will be on if the current value is equal to or greater than the preset value. For example the discrete status bit for timer 2 would be T2.

*NOTE: The accumulating type timer uses **two consecutive V-memory locations** for the 8-digit value, and therefore two consecutive timer locations. For example, if TMR 1 is used, the next available timer number is TMR 3.*

Operand Data Type	DL05 Range	
..... A/B	aaa	bbb
Timers ..... T	0–176	—
V-memory for preset values V	—	1200–7377/7400–7577*
Pointers (preset only) ..... P	—	1200–7377/7400–7577
Constants (preset only) ..... K	—	0–99999999
Timer discrete status bits ..... T/V	0–176 or V41100–41107	
Timer current values ..... V /T**	0–176	

*NOTE: * May be non-volatile if MOV instruction is used.*
*** With the HPP, both the Timer discrete status bits and current value are accessed with the same data reference. **Direct**SOFT 5 uses separate references, such as "T2" for discrete status bit for Timer T2, and "TA2" for the current value of Timer T2.*

The following examples show two methods of programming timers. One performs functions when the timer reaches the preset value using the discrete status bit, or use comparative contacts to perform functions at different time intervals.

Accumulating Timer Example using Discrete Status Bits

In the following example, a two input timer (accumulating timer) is used with a preset of 3 seconds. The timer discrete status bit (T6) will turn on when the timer has timed for 3 seconds. Notice in this example that the timer times for 1 second, stops for one second, then resumes timing. The timer will reset when C10 turns on, turning the discrete status bit off and resetting the timer current value to 0.

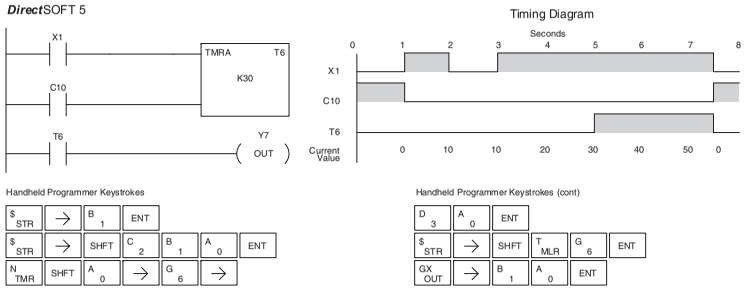

5

Accumulator Timer Example Using Comparative Contacts

In the following example, a single input timer is used with a preset of 4.5 seconds. Comparative contacts are used to energized Y3, Y4, and Y5 at one second intervals respectively. The comparative contacts will turn off when the timer is reset.

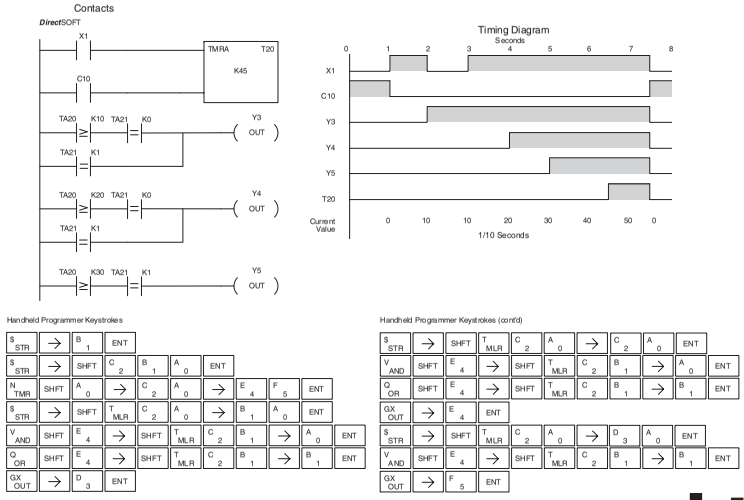

Using Counters

Counters are used to count events. The counters available are up counters, up/down counters, and stage counters (used with RLL*PLUS* programming).

The up counter has two inputs, a count input and a reset input. The maximum count value is 9999. The timing diagram below shows the relationship between the counter input, counter reset, associated discrete bit, current value, and counter preset.

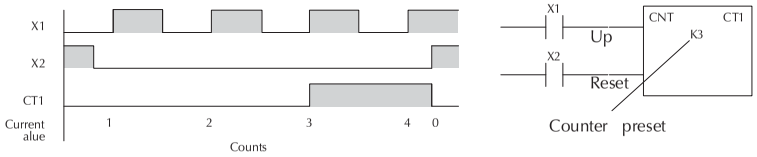

The up down counter has three inputs, a count up input, count down input and reset input. The maximum count value is 99999999. The timing diagram below shows the relationship between the counter input, counter reset, associated discrete bit, current value, and counter preset.

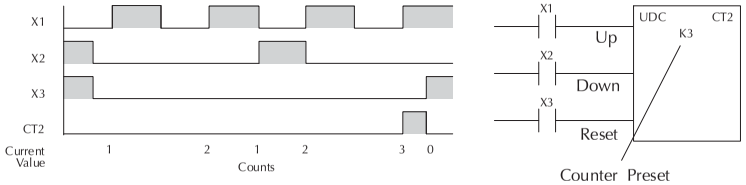

The stage counter has a count input and is reset by the RST instruction. This instruction is useful when programming using the RLL*PLUS* structured programming. The maximum count value is 9999. The timing diagram below shows the relationship between the counter input, associated discrete bit, current value, counter preset and reset instruction.

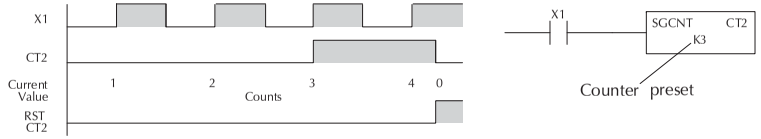

Counter (CNT)

DS5	Used
HPP	Used

The Counter is a two input counter that increments when the count input logic transitions from off to on. When the counter reset input is on the counter resets to 0. When the current value equals the preset value, the counter status bit comes on and the counter continues to count up to a maximum count of 9999. The maximum value will be held until the counter is reset.

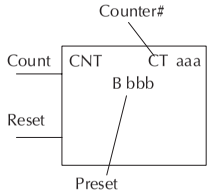

The counter discrete status bit and the current value are not specified in the counter instruction.

Instruction Specifications

Counter Reference (CTaaa): Specifies the counter number.

Preset Value (Bbbb): Constant value (K) or a V-memory location as a BCD value.

Current Values: Counter current values are accessed by referencing the associated V or CT memory locations*. The V-memory location is the counter location + 1000. For example, the counter current value for CT3 resides in V-memory location V1003 as a BCD value.

Discrete Status Bit: The discrete status bit is accessed by referencing the associated CT memory location. It will be on if the value is equal to or greater than the preset value. For example the discrete status bit for counter 2 would be CT2.

NOTE: Counter preset constants (K) may be changed by using a programming device, even when the CPU is in Run Mode. Therefore, a V-memory preset is required only if the ladder program must change the preset.

Operand Data Type	DL05 Range	
..... A/B	aaa	bbb
Counters ..... CT	0–177	—
V-memory (preset only) V	—	1200–7377 7400–7577*
Pointers (preset only) ..... P	—	1200–7377 7400–7577
Constants (preset only) ..... K	—	0–9999
Counter discrete status bits ..... CT/V	0–177 or V41140–41147	
Counter current values ..... V /CT**	0–177	

*NOTE: * May be non-volatile if MOV instruction is used.*
*** With the HPP, both the Counter discrete status bits and current value are accessed with the same data reference. **Direct**SOFT 5 uses separate references, such as "CT2" for discrete status bit for Counter CT2, and "CTA2" for the current value of Counter CT2.*

5

Counter Example Using Discrete Status Bits

In the following example, when X1 makes an off to on transition, counter CT2 will increment by one. When the current value reaches the preset value of 3, the counter status bit CT2 will turn on and energize Y7. When the reset C10 turns on, the counter status bit will turn off and the current value will be 0. The current value for counter CT2 will be held in V-memory location V1002.

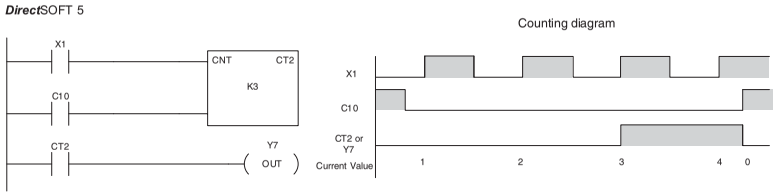

Handheld Programmer Keystrokes

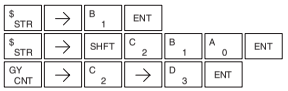

Handheld Programmer Keystrokes (cont)

Counter Example Using Comparative Contacts

In the following example, when X1 makes an off to on transition, counter CT2 will increment by one. Comparative contacts are used to energize Y3, Y4, and Y5 at different counts. When the reset C10 turns on, the counter status bit will turn off and the counter current value will be 0, and the comparative contacts will turn off.

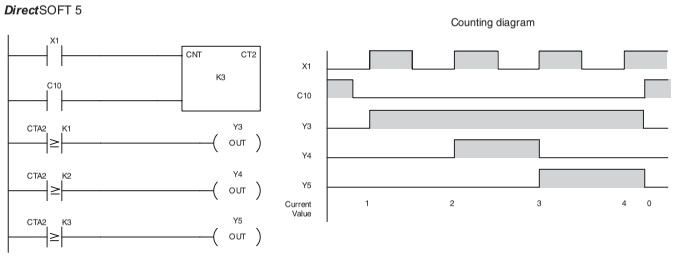

Handheld Programmer Keystrokes

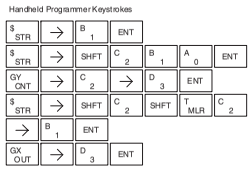

Handheld Programmer Keystrokes (cont)

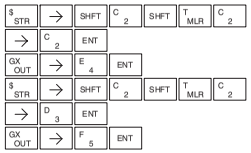

5

Stage Counter (SGCNT)

DS5	Used
HPP	Used

The Stage Counter is a single input counter that increments when the input logic transitions from off to on. This counter differs from other counters since it will hold its current value until reset using the RST instruction. The Stage Counter is designed for use in RLL*PLUS* programs but can be used in relay ladder logic programs. When the current value equals the preset value, the counter status bit turns on and the counter continues to count up to a maximum count of 9999. The maximum value will be held until the counter is reset.

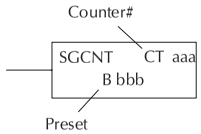

The counter discrete status bit and the current value are not specified in the counter instruction.

Instruction Specifications

Counter Reference (CTaaa): Specifies the counter number.

Preset Value (Bbbb): Constant value (K) or a V-memory location.

Current Values: Counter current values are accessed by referencing the associated V or CT memory locations*. The V-memory location is the counter location + 1000. For example, the counter current value for CT3 resides in V-memory location V1003.

Discrete Status Bit: The discrete status bit is accessed by referencing the associated CT memory location. It will be on if the value is equal to or greater than the preset value. For example the discrete status bit for counter 2 would be CT2.

Operand Data Type	DL05 Range	
..... A/B	aaa	bbb
Counters ..... CT	0–177	—
V-memory (preset only) V	—	1200–7377 7400–7577*
Pointers (preset only) ..... P	—	1200–7377 7400–7577
Constants (preset only) ..... K	—	0–9999
Counter discrete status bits ..... CT/V	0–177 or V41140–41147	
Counter current values ..... V /CT**	1000–1177	

*NOTE: * May be non-volatile if MOV instruction is used.*
*** With the HPP, both the Counter discrete status bits and current value are accessed with the same data reference. **Direct**SOFT 5 uses separate references, such as "CT2" for discrete status bit for Counter CT2, and "CTA2" for the current value of Counter CT2.*

5

Stage Counter Example Using Discrete Status Bits

In the following example, when X1 makes an off to on transition, stage counter CT7 will increment by one. When the current value reaches 3, the counter status bit CT7 will turn on and energize Y7. The counter status bit CT7 will remain on until the counter is reset using the RST instruction. When the counter is reset, the counter status bit will turn off and the counter current value will be 0. The current value for counter CT7 will be held in V-memory location V1007.

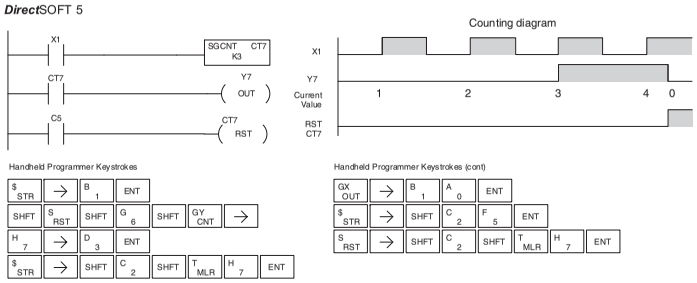

Stage Counter Example Using Comparative Contacts

In the following example, when X1 makes an off to on transition, counter CT2 will increment by one. Comparative contacts are used to energize Y3, Y4, and Y5 at different counts. Although this is not shown in the example, when the counter is reset using the Reset instruction, the counter status bit will turn off and the current value will be 0. The current value for counter CT2 will be held in V-memory location V1002.

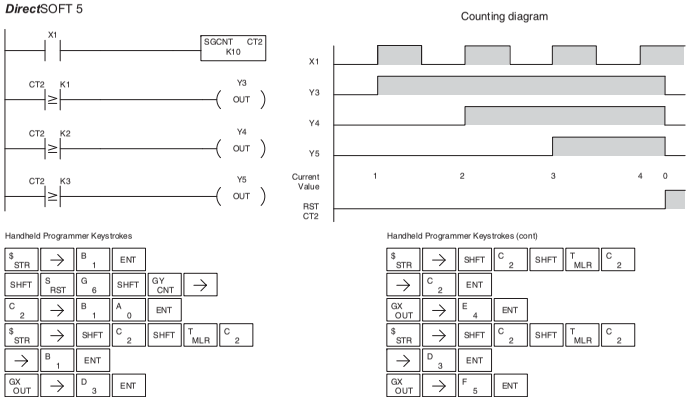

5

Up Down Counter (UDC)

DS5	Used
HPP	Used

This Up/Down Counter counts up on each off to on transition of the Up input and counts down on each off to on transition of the Down input. The counter is reset to 0 when the Reset input is on. The count range is 0–99999999. The count input not being used must be off in order for the active count input to function.

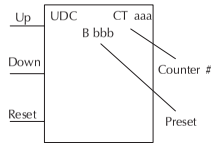

Caution: The UDC uses two V-memory locations for the 8 digit current value. This means that the UDC uses two consecutive counter locations. If UDC CT1 is used in the program, the next available counter is CT3.

The counter discrete status bit and the current value are not specified in the counter instruction

Instruction Specification

Counter Reference (CTaaa): Specifies the counter number.

Preset Value (Bbbb): Constant value (K) or two consecutive V-memory locations as a BCD value.

Current Values: Current count is a double word value accessed by referencing the associated V or CT memory locations*. The V-memory location is the counter location + 1000. For example, the counter current value for CT5 resides in V-memory location V1005 and V1006 as a BCD value.

Discrete Status Bit: The discrete status bit is accessed by referencing the associated CT memory location. Operating as a "counter done bit" it will be on if the value is equal to or greater than the preset value. For example the discrete status bit for counter 2 would be CT2.

Operand Data Type	DL05 Range	
..... A/B	aaa	bbb
Counters ..... CT	0–176	—
V-memory (preset only) V	—	1200–7377 7400–7577*
Pointers (preset only) ..... P	—	1200–7377 7400–7577
Constants (preset only) ..... K	—	0–99999999
Counter discrete status bits ..... CT/V	0–176 or V41140–41147	
Counter current values ..... V /CT**	0–176	

*NOTE: * May be non-volatile if MOV instruction is used.*
*** With the HPP, both the Counter discrete status bits and current value are accessed with the same data reference. **Direct**SOFT 5 uses separate references, such as "CT2" for discrete status bit for Counter CT2, and "CTA2" for the current value of Counter CT2.*

Up / Down Counter Example Using Discrete Status Bits

In the following example if X2 and X3 are off ,when X1 toggles from off to on the counter will increment by one. If X1 and X3 are off the counter will decrement by one when X2 toggles from off to on. When the count value reaches the preset value of 3, the counter status bit will turn on. When the reset X3 turns on, the counter status bit will turn off and the current value will be 0.

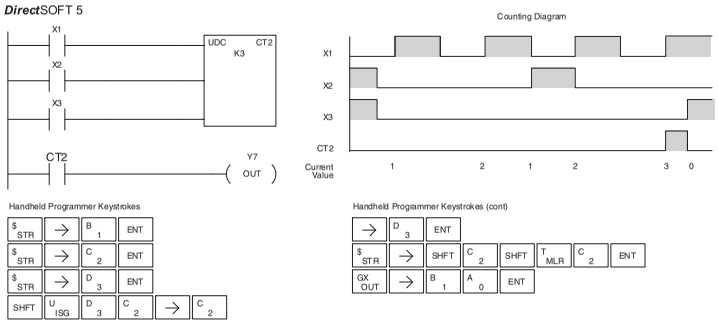

Up / Down Counter Example Using Comparative Contacts

In the following example, when X1 makes an off to on transition, counter CT2 will increment by one. Comparative contacts are used to energize Y3 and Y4 at different counts. When the reset (X3) turns on, the counter status bit will turn off, the current value will be 0, and the comparative contacts will turn off.

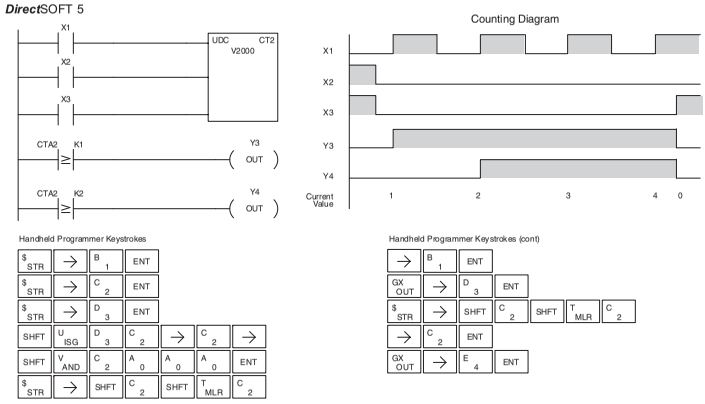

Shift Register (SR)

DS5	Used
HPP	Used

The Shift Register instruction shifts data through a predefined number of control relays. The control ranges in the shift register block must start at the beginning of an 8 bit boundary use 8-bit blocks.

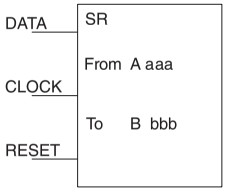

The Shift Register has three contacts.

- Data — determines the value (1 or 0) that will enter the register
- Clock — shifts the bits one position on each low to high transition
- Reset —resets the Shift Register to all zeros.

With each off to on transition of the clock input, the bits which make up the shift register block are shifted by one bit position and the status of the data input is placed into the starting bit position in the shift register. The direction of the shift depends on the entry in the From and To fields. From C0 to C17 would define a block of sixteen bits to be shifted from left to right. From C17 to C0 would define a block of sixteen bits, to be shifted from right to left. The maximum size of the shift register block depends on the number of available control relays. The minimum block size is 8 control relays.

Operand Data Type	DL05 Range	
..... A/B	aaa	bbb
Control Relay C	0–777	0–777

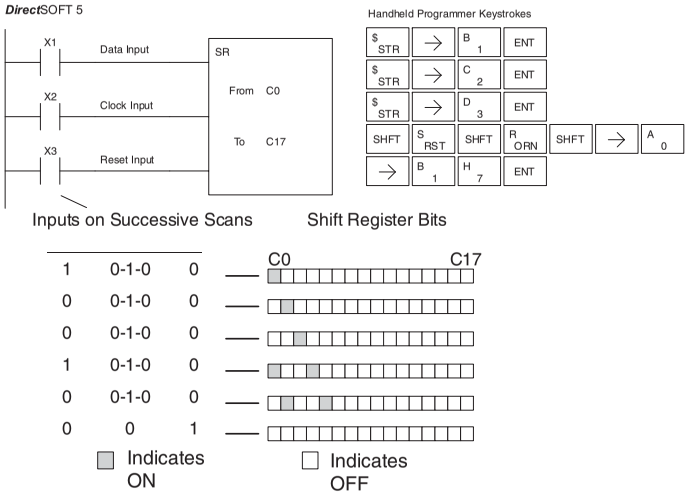

Accumulator/Stack Load and Output Data Instructions

Using the Accumulator

The accumulator in the DL05 internal CPUs is a 32 bit register which is used as a temporary storage location for data that is being copied or manipulated in some manor. For example, you have to use the accumulator to perform math operations such as add, subtract, multiply, etc. Since there are 32 bits, you can use up to an 8-digit BCD number. The accumulator is reset to 0 at the end of every CPU scan.

Copying Data to the Accumulator

The Load and Out instructions and their variations are used to copy data from a V-memory location to the accumulator, or, to copy data from the accumulator to V-memory. The following example copies data from V-memory location V2000 to V-memory location V2010.

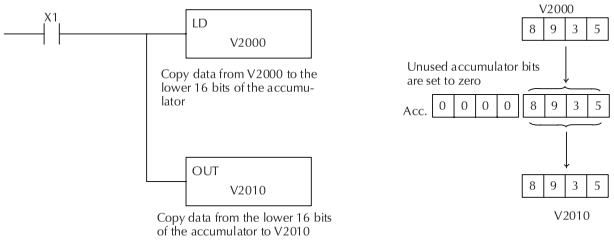

Since the accumulator is 32 bits and V-memory locations are 16 bits the Load Double and Out Double (or variations thereof) use two consecutive V-memory locations or 8 digit BCD constants to copy data either to the accumulator from a V-memory address or from a V-memory address to the accumulator. For example if you wanted to copy data from V2000 and V2001 to V2010 and V2011 the most efficient way to perform this function would be as follows:

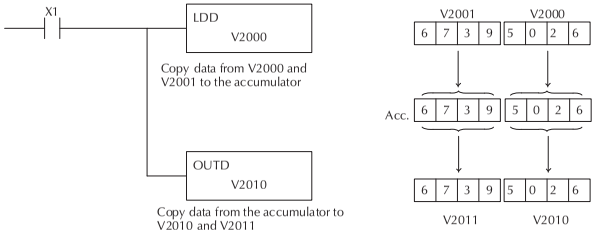

Changing the Accumulator Data

Instructions that manipulate data also use the accumulator. The result of the manipulated data resides in the accumulator. The data that was being manipulated is cleared from the accumulator. The following example loads the constant value 4935 into the accumulator, shifts the data right 4 bits, and outputs the result to V2010.

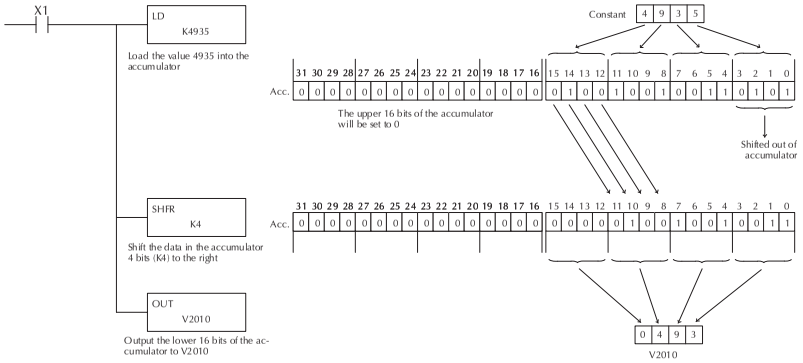

Some of the data manipulation instructions use 32 bits. They use two consecutive V-memory locations or an 8 digit BCD constant to manipulate data in the accumulator.

In the following example, when X1 is on, the value in V2000 and V2001 will be loaded into the accumulator using the Load Double instruction. The value in the accumulator is added with the value in V2006 and V2007 using the Add Double instruction. The value in the accumulator is copied to V2010 and V2011 using the Out Double instruction.

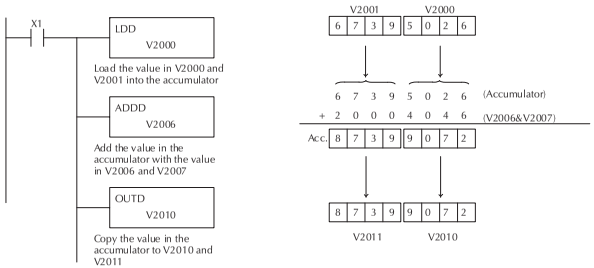

Using the Accumulator Stack

The accumulator stack is used for instructions that require more than one parameter to execute a function or for user defined functionality. The accumulator stack is used when more than one Load instruction is executed without the use of an Out instruction. The first load instruction in the scan places a value into the accumulator. Every Load instruction thereafter without the use of an Out instruction places a value into the accumulator and the value that was in the accumulator is placed onto the accumulator stack. The Out instruction nullifies the previous load instruction and does not place the value that was in the accumulator onto the accumulator stack when the next load instruction is executed. Every time a value is placed onto the accumulator stack the other values in the stack are pushed down one location. The accumulator is eight levels deep (eight 32 bit registers). If there is a value in the eighth location when a new value is placed onto the stack, the value in the eighth location is pushed off the stack and cannot be recovered.

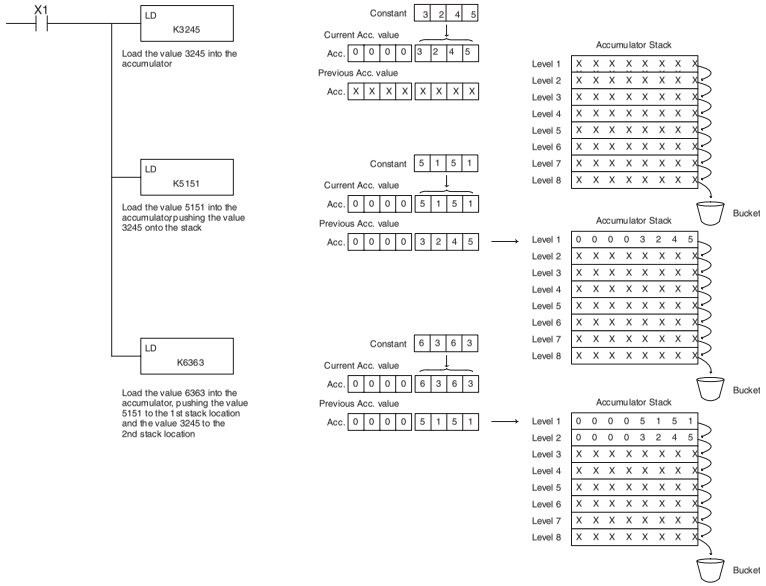

The POP instruction rotates values upward through the stack into the accumulator. When a POP is executed the value which was in the accumulator is cleared and the value that was on top of the stack is in the accumulator. The values in the stack are shifted up one position in the stack.

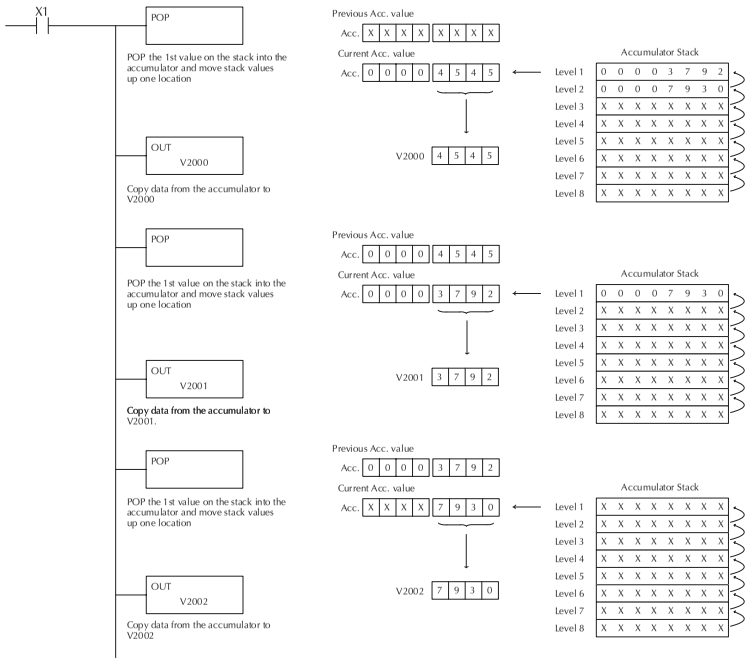

Using Pointers

Many of the DL05 series instructions will allow V-memory pointers as a operand (commonly known as indirect addressing). Pointers allow instructions to obtain data from V-memory locations referenced by the pointer value.

NOTE: DL05 V-memory addressing is in octal. However, the pointers reference a V-memory location with values viewed as HEX. Use the Load Address (LDA) instruction to move an address into the pointer location. This instruction performs the Octal to Hexadecimal conversion automatically.

In the following simple example we are using a pointer operand in a Load instruction. V-memory location 2000 is being used as the pointer location. V2000 contains the value 440 which the CPU views as the Hex equivalent of the Octal address V-memory location V2100. The CPU will copy the data from V2100 which in this example contains the value 2635 into the lower word of the accumulator.

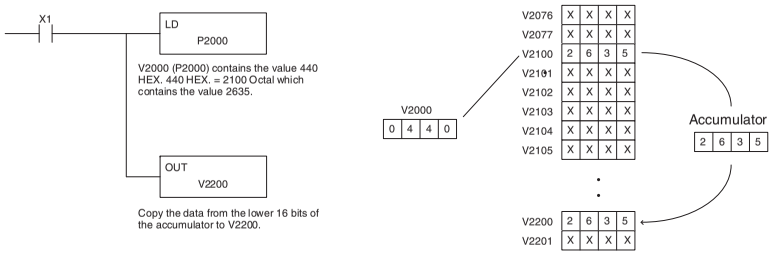

The following example is identical to the one above with one exception. The LDA (Load Address) instruction automatically converts the Octal address to Hex.

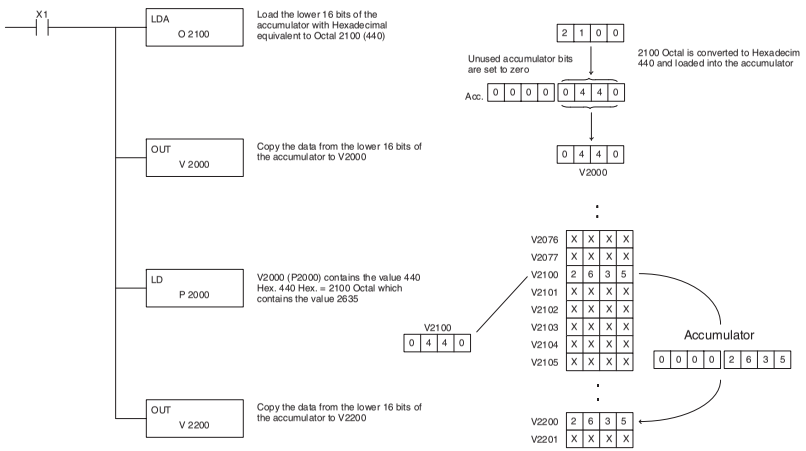

Load (LD)

DS5	Used
HPP	Used

The Load instruction is a 16 bit instruction that loads the value (Aaaa), which is either a V-memory location or a 4 digit constant, into the lower 16 bits of the accumulator. The upper 16 bits of the accumulator are set to 0.

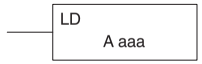

Operand Data Type	DL05 Range
..... A	aaa
V-memory V	See memory map
Pointer ..... P	See memory map
Constant ..... K	0–FFFF

Discrete Bit Flags	Description
SP53	On when the pointer is outside of the available range.
SP70	On anytime the value in the accumulator is negative.
SP76	On when the value loaded into the accumulator is zero.

NOTE: Two consecutive Load instructions will place the value of the first load instruction onto the accumulator stack.

In the following example, when X1 is on, the value in V2000 will be loaded into the accumulator and output to V2010.

***Direct*SOFT 5**

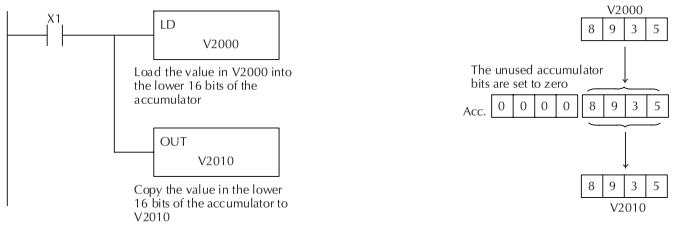

Handheld Programmer Keystrokes

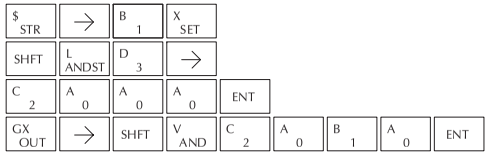

Load Double (LDD)

DS5	Used
HPP	Used

The Load Double instruction is a 32 bit instruction that loads the value (Aaaa), which is either two consecutive V-memory locations or an 8 digit constant value, into the accumulator.

```
LDD
    A aaa
```

Operand Data Type	DL05 Range
..... A	aaa
V-memory V	See memory map
Pointer ..... P	See memory map
Constant ..... K	0–FFFF

Discrete Bit Flags	Description
SP53	On when the pointer is outside of the available range.
SP70	On anytime the value in the accumulator is negative.
SP76	On when the value loaded into the accumulator by any instruction is zero.

NOTE: Two consecutive Load instructions will place the value of the first load instruction onto the accumulator stack.

In the following example, when X1 is on, the 32 bit value in V2000 and V2001 will be loaded into the accumulator and output to V2010 and V2011.

***Direct*SOFT 5**

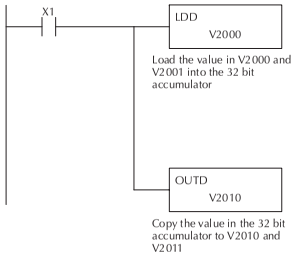

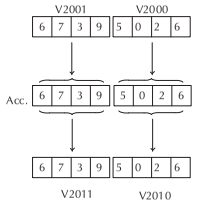

Handheld Programmer Keystrokes

$ STR	→	B 1	ENT	
SHFT	L ANDST	D 3	D 3	→
C 2	A 0	A 0	A 0	ENT
GX OUT	SHFT	D 3	→	
C 2	A 0	B 1	A 0	ENT

Load Formatted (LDF)

DS5	Used
HPP	Used

The Load Formatted instruction loads 1–32 consecutive bits from discrete memory locations into the accumulator. The instruction requires a starting location (Aaaa) and the number of bits (Kbbb) to be loaded. Unused accumulator bit locations are set to zero.

```
LDF        A aaa
    K bbb
```

Operand Data Type		DL05 Range	
..... A		aaa	bbb
Inputs	X	0–377	—
Outputs	Y	0–377	—
Control Relays	C	0–777	—
Stage Bits	S	0–377	—
Timer Bits	T	0–177	—
Counter Bits	CT	0–177	—
Special Relays	SP	0–777	—
Constant	K	—	1–32

Discrete Bit Flags	Description
SP70	On anytime the value in the accumulator is negative.
SP76	On when the value loaded into the accumulator by any instruction is zero.

NOTE: Two consecutive Load instructions will place the value of the first load instruction onto the accumulator stack.

In the following example, when C0 is on, the binary pattern of C10–C16 (7 bits) will be loaded into the accumulator using the Load Formatted instruction. The lower 7 bits of the accumulator are output to Y0–Y6 using the Out Formatted instruction.

***Direct*SOFT 5**

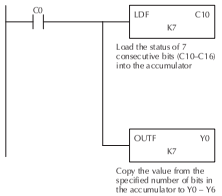

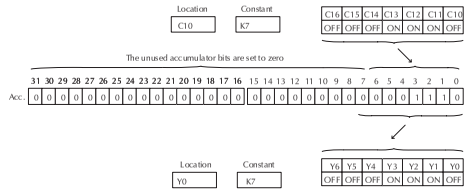

Handheld Programmer Keystrokes

$ STR	→	SHFT	C 2	A 0	ENT	
SHFT	L ANDST	D 3	F 5	→		
SHFT	C 2	B 1	A 0	→	H 7	ENT
GX OUT	SHFT	F 5	→			
A 0	→	H 7	ENT			

Load Address (LDA)

DS5	Used
HPP	Used

The Load Address instruction is a 16 bit instruction. It converts any octal value or address to the HEX equivalent value and loads the HEX value into the accumulator. This instruction is useful when an address parameter is required since all addresses for the DL05 system are in octal.

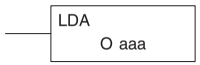

Operand Data Type	DL05 Range
	aaa
Octal Address ..... O	See memory map

5

Discrete Bit Flags	Description
SP70	On anytime the value in the accumulator is negative.
SP76	On when the value loaded into the accumulator by any instruction is zero.

NOTE: Two consecutive Load instructions will place the value of the first load instruction onto the accumulator stack.

In the following example when X1 is on, the octal number 40400 will be converted to a HEX 4100 and loaded into the accumulator using the Load Address instruction. The value in the lower 16 bits of the accumulator is copied to V2000 using the Out instruction.

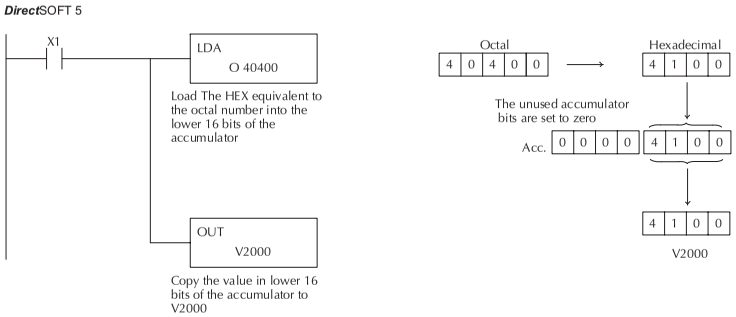

Handheld Programmer Keystrokes

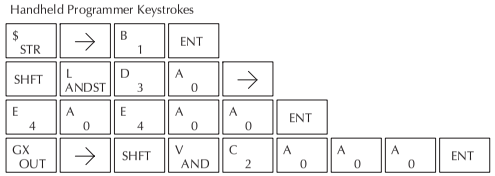

Out (OUT)

DS5	Used
HPP	Used

The Out instruction is a 16 bit instruction that copies the value in the lower 16 bits of the accumulator to a specified V-memory location (Aaaa).

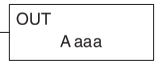

Operand Data Type	DL05 Range
..... A	aaa
V-memory V	See memory map
Pointer ..... P	See memory map

Discrete Bit Flags	Description
SP53	On when the pointer is outside of the available range.

5

In the following example, when X1 is on, the value in V2000 will be loaded into the lower 16 bits of the accumulator using the Load instruction. The value in the lower 16 bits of the accumulator are copied to V2010 using the Out instruction.V2000

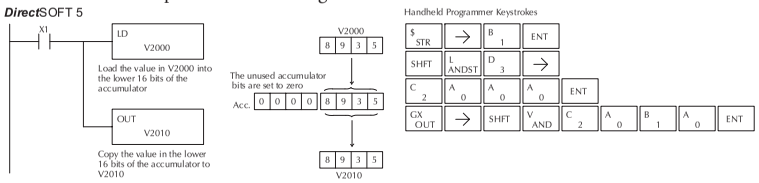

Out Double (OUTD)

DS5	Used
HPP	Used

The Out Double instruction is a 32 bit instruction that copies the value in the accumulator to two consecutive V memory locations at a specified starting location (Aaaa).

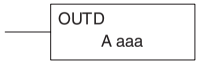

Operand Data Type	DL05 Range
..... A	aaa
V-memory V	All (See page 4–28)
Pointer ..... P	All V-memory (See page 4–28)

Discrete Bit Flags	Description
SP53	On when the pointer is outside of the available range.

In the following example, when X1 is on, the 32 bit value in V2000 and V2001 will be loaded into the accumulator using the Load Double instruction. The value in the accumulator is output to V2010 and V2011 using the Out Double instruction.

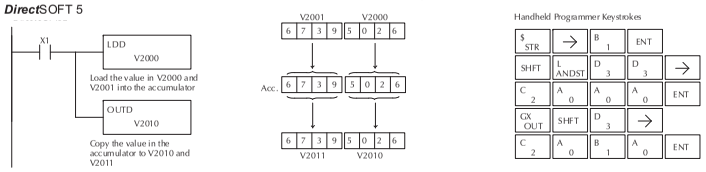

Out Formatted (OUTF)

DS5	Used
HPP	Used

The Out Formatted instruction outputs 1–32 bits from the accumulator to the specified discrete memory locations. The instruction requires a starting location (Aaaa) for the destination and the number of bits (Kbbb) to be output.

```
OUTF      A aaa
     K bbb
```

Operand Data Type	DL05 Range	
..... A	aaa	bbb
Inputs X	0–377	—
Outputs ..... Y	0–377	—
Control Relays C	0–777	—
Constant ..... K	—	1–32

In the following example, when C0 is on, the binary pattern of C10–C16 (7 bits) will be loaded into the accumulator using the Load Formatted instruction. The lower 7 bits of the accumulator are output to Y0–Y6 using the Out Formatted instruction.

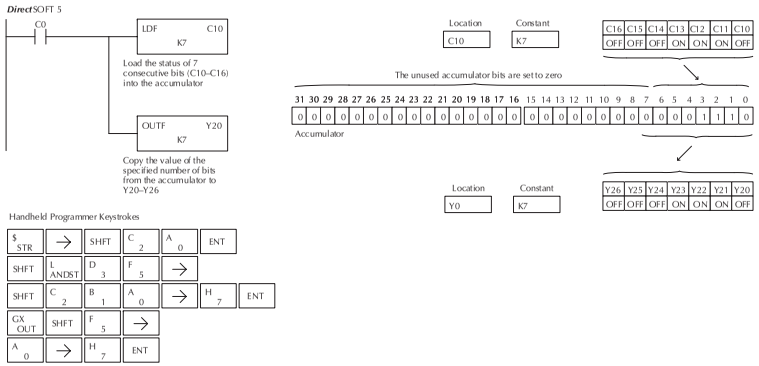

POP

DS5	Used
HPP	Used

The POP instruction moves the value from the first level of the accumulator stack (32 bits) to the accumulator and shifts each value in the stack up one level.

```
POP
```

Discrete Bit Flags	Description
SP63	On when the result of the instruction causes the value in the accumulator to be zero.

Pop Instruction (cont'd)

In the example below, when C0 is on, the value 4545 that was on top of the stack is moved into the accumulator using the Pop instruction The value is output to V2000 using the Out instruction. The next Pop moves the value 3792 into the accumulator and outputs the value to V2001. The last Pop moves the value 7930 into the accumulator and outputs the value to V2002. Please note if the value in the stack were greater than 16 bits (4 digits) the Out Double instruction would be used and two V-memory locations for each Out Double must be allocated.

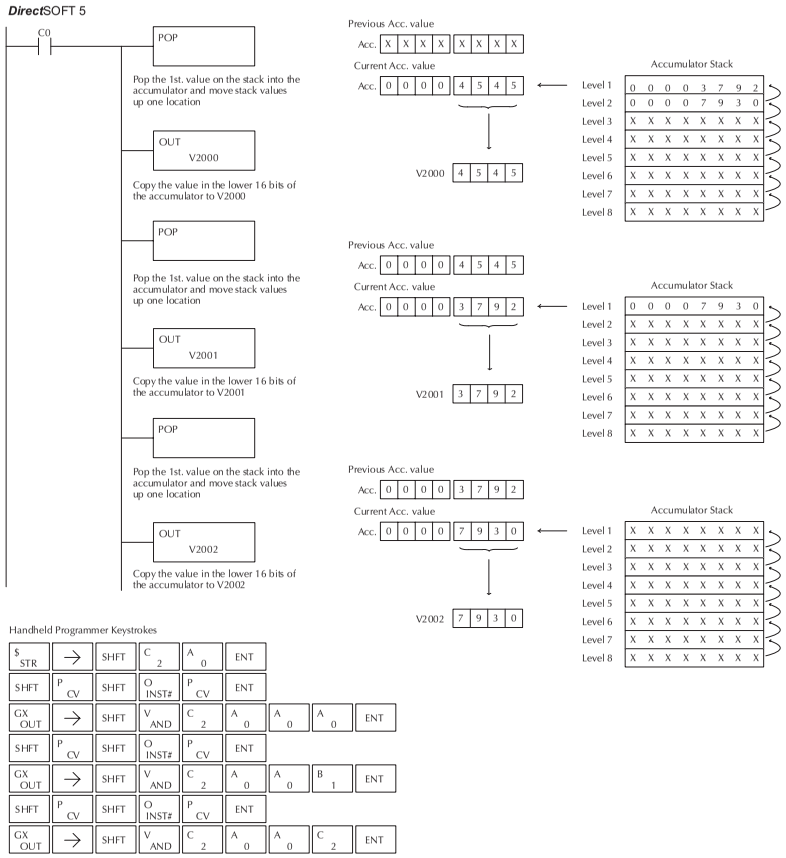

Logical Instructions (Accumulator)

And (AND)

DS5	Used
HPP	Used

The And instruction is a 16 bit instruction that logically ands the value in the lower 16 bits of the accumulator with a specified V-memory location (Aaaa). The result resides in the accumulator. The discrete status flag indicates if the result of the And is zero.

```
AND
    A aaa
```

Operand Data Type	DL05 Range
..... A	aaa
V-memory V	See memory map
Pointer ..... P	See memory map

Discrete Bit Flags	Description
SP63	On if the result in the accumulator is zero.
SP70	On anytime the value in the accumulator is negative.

NOTE: The status flags are only valid until another instruction that uses the same flags is executed.

In the following example, when X1 is on, the value in V2000 will be loaded into the accumulator using the Load instruction. The value in the accumulator is anded with the value in V2006 using the And instruction. The value in the lower 16 bits of the accumulator is output to V2010 using the Out instruction.

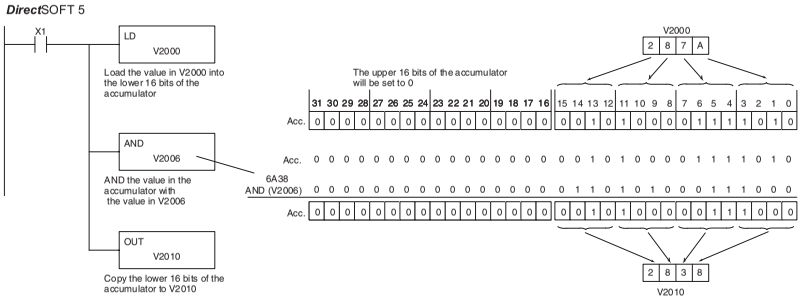

Handheld Programmer Keystrokes

$ STR	→	B 1	ENT					
SHFT	L ANDST	D 3	→	C 2	A 0	A 0	A 0	ENT
V AND	→	SHFT	V AND	C 2	A 0	A 0	G 6	ENT
GX OUT	→	SHFT	V AND	C 2	A 0	B 1	A 0	ENT

And Double (ANDD)

DS5	Used
HPP	Used

The And Double is a 32 bit instruction that logically ands the value in the accumulator with two consecutive V-memory locations or an 8 digit (max.) constant value (Aaaa). The result resides in the accumulator. Discrete status flags indicate if the result of the And Double is zero or a negative number (the most significant bit is on).

```
ANDD
    K aaa
```

Operand Data Type	DL05 Range
	aaa
V-memory V	See memory map
Pointer ..... P	See memory map
Constant ..... K	0–FFFFFFFF

Discrete Bit Flags	Description
SP63	On if the result in the accumulator is zero.
SP70	On anytime the value in the accumulator is negative

NOTE: The status flags are only valid until another instruction that uses the same flags is executed.

In the following example, when X1 is on, the value in V2000 and V2001 will be loaded into the accumulator using the Load Double instruction. The value in the accumulator is anded with 36476A38 using the And double instruction. The value in the accumulator is output to V2010 and V2011 using the Out Double instruction.

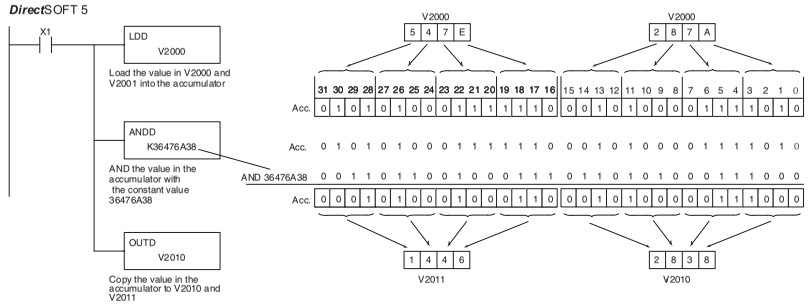

Handheld Programmer Keystrokes

$ STR	→	B 1	ENT														
SHFT	L ANDST	D 3	D 3	→	C 2	A 0	A 0	A 0	ENT								
V AND	SHFT	D 3	→	SHFT	K JMP	D 3	G 6	E 4	H 7	G 6	SHFT	A 0	SHFT	D 3	I 8	ENT	
GX OUT	SHFT	D 3	→	C 2	A 0	B 1	A 0	ENT									

Or (OR)

DS5	Used
HPP	Used

The Or instruction is a 16 bit instruction that logically ors the value in the lower 16 bits of the accumulator with a specified V-memory location (Aaaa). The result resides in the accumulator. The discrete status flag indicates if the result of the Or is zero.

```
OR
    A aaa
```

Operand Data Type	DL05 Range
..... A	aaa
V-memory V	See memory map
Pointer ..... P	See memory map

Discrete Bit Flags	Description
SP63	On if the result in the accumulator is zero.
SP70	On anytime the value in the accumulator is negative.

NOTE: The status flags are only valid until another instruction that uses the same flags is executed.

In the following example, when X1 is on, the value in V2000 will be loaded into the accumulator using the Load instruction. The value in the accumulator is ored with V2006 using the Or instruction. The value in the lower 16 bits of the accumulator are output to V2010 using the Out instruction.

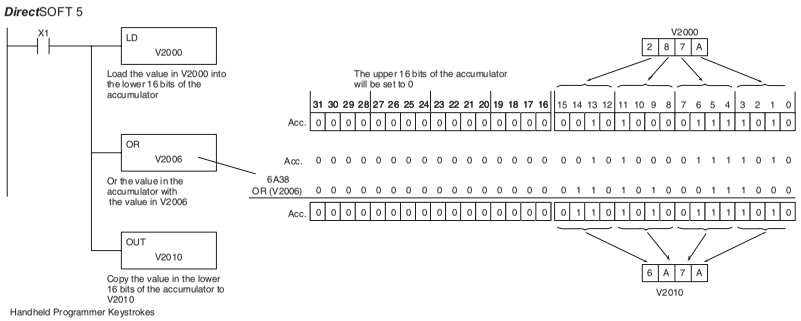

Handheld Programmer Keystrokes

$ STR	→	B 1	ENT					
SHFT	L ANDST	D 3	→	C 2	A 0	A 0	A 0	ENT
Q OR	→	SHFT	V AND	C 2	A 0	A 0	G 6	ENT
GX OUT	→	SHFT	V AND	C 2	A 0	B 1	A 0	ENT

Or Double (ORD)

DS5	Used
HPP	Used

The Or Double is a 32 bit instruction that ors the value in the accumulator with the value (Aaaa), which is either two consecutive V-memory locations or an 8 digit (max.) constant value. The result resides in the accumulator. Discrete status flags indicate if the result of the Or Double is zero or a negative number (the most significant bit is on).

```
ORD
    K aaa
```

Operand Data Type	DL05 Range
	aaa
V-memory V	See memory map
Pointer ..... P	See memory map
Constant ..... K	0–FFFFFFFF

Discrete Bit Flags	Description
SP63	On if the result in the accumulator is zero.
SP70	On anytime the value in the accumulator is negative.

NOTE: The status flags are only valid until another instruction that uses the same flags is executed.

In the following example, when X1 is on, the value in V2000 and V2001 will be loaded into the accumulator using the Load Double instruction. The value in the accumulator is ored with 36476A38 using the Or Double instruction. The value in the accumulator is output to V2010 and V2011 using the Out Double instruction.

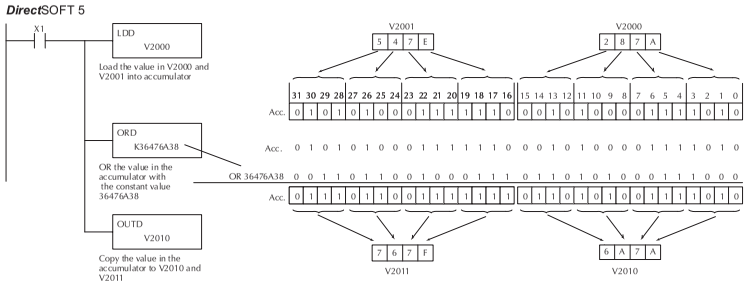

Handheld Programmer Keystrokes

$ STR	→	B 1	ENT												
SHFT	L ANDST	D 3	D 3	→	C 2	A 0	A 0	A 0	ENT						
Q OR	SHFT	D 3	→	SHFT	K JMP	D 3	G 6	E 4	H 7	G 6	SHFT	A 0	SHFT	D 3	I 8	ENT
GX OUT	SHFT	D 3	→	C 2	A 0	B 1	A 0	ENT							

Exclusive Or (XOR)

DS5	Used
HPP	Used

The Exclusive Or instruction is a 16 bit instruction that performs an exclusive or of the value in the lower 16 bits of the accumulator and a specified V-memory location (Aaaa). The result resides in the in the accumulator. The discrete status flag indicates if the result of the XOR is zero.

```
XOR
    A aaa
```

Operand Data Type	DL05 Range
..... A	aaa
V-memory V	See memory map
Pointer ..... P	See memory map

Discrete Bit Flags	Description
SP63	On if the result in the accumulator is zero.
SP70	On anytime the value in the accumulator is negative.

NOTE: The status flags are only valid until another instruction that uses the same flags is executed.

In the following example, when X1 is on, the value in V2000 will be loaded into the accumulator using the Load instruction. The value in the accumulator is exclusive ored with V2006 using the Exclusive Or instruction. The value in the lower 16 bits of the accumulator are output to V2010 using the Out instruction.

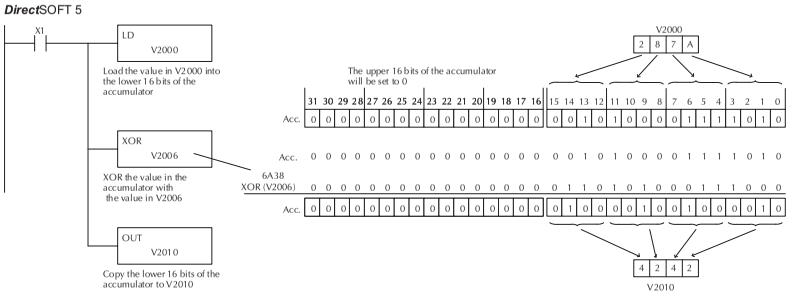

Handheld Programmer Keystrokes

$ STR	→	SHFT	X SET	B 1	ENT										
SHFT	L ANDST	D 3	→	SHFT	V AND	C 2	A 0	A 0	A 0	ENT					
SHFT	X SET	SHFT	Q OR	→	SHFT	V AND	C 2	A 0	A 0	G 6	ENT				
GX OUT	→	SHFT	V AND	C 2	A 0	B 1	A 0	ENT							

Exclusive Or Double (XORD)

DS5	Used
HPP	Used

The Exclusive OR Double is a 32 bit instruction that performs an exclusive or of the value in the accumulator and the value (Aaaa), which is either two consecutive V-memory locations or an 8 digit (max.) constant. The result resides in the accumulator. Discrete status flags indicate if the result of the Exclusive Or Double is zero or a negative number (the most significant bit is on).

```
XORD
    K aaa
```

Operand Data Type	DL05 Range
..... A	aaa
V-memory V	See memory map
Pointer ..... P	See memory map
Constant ..... K	0–FFFFFFFF

Discrete Bit Flags	Description
SP63	On if the result in the accumulator is zero.
SP70	On anytime the value in the accumulator is negative.

NOTE: The status flags are only valid until another instruction that uses the same flags is executed.

In the following example, when X1 is on, the value in V2000 and V2001 will be loaded into the accumulator using the Load Double instruction. The value in the accumulator is exclusively ored with 36476A38 using the Exclusive Or Double instruction. The value in the accumulator is output to V2010 and V2011 using the Out Double instruction.

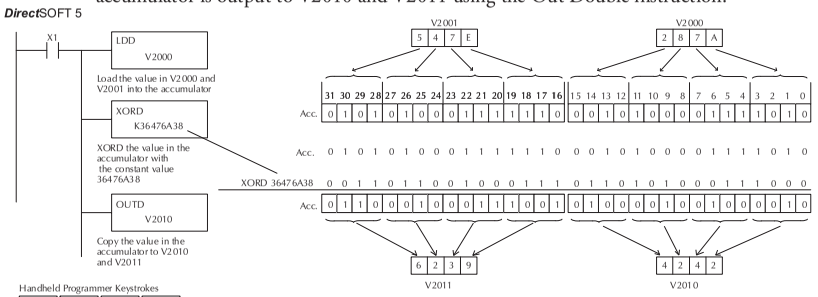

Handheld Programmer Keystrokes

$ STR	→	B 1	ENT												
SHFT	L ANDST	D 3	D 3	→	C 2	A 0	A 0	A 0	ENT						
SHFT	X SET	Q OR	SHFT	D 3	→	SHFT	K JMP								
D 3	G 6	E 4	H 7	G 6	SHFT	A 0	SHFT	D 3	I 8	ENT					
GX OUT	SHFT	D 3	→	C 2	A 0	B 1	A 0	ENT							

Compare (CMP)

DS5	Used
HPP	Used

The compare instruction is a 16 bit instruction that compares the value in the lower 16 bits of the accumulator with the value in a specified V-memory location (Aaaa). The corresponding status flag will be turned on indicating the result of the comparison.

```
CMP
    A aaa
```

Operand Data Type	DL05 Range
..... A	aaa
V-memory V	See memory map
Pointer ..... P	See memory map

Discrete Bit Flags	Description
SP60	On when the value in the accumulator is less than the instruction value.
SP61	On when the value in the accumulator is equal to the instruction value.
SP62	On when the value in the accumulator is greater than the instruction value.

NOTE: The status flags are only valid until another instruction that uses the same flags is executed.

In the following example when X1 is on, the constant 4526 will be loaded into the lower 16 bits of the accumulator using the Load instruction. The value in the accumulator is compared with the value in V2000 using the Compare instruction. The corresponding discrete status flag will be turned on indicating the result of the comparison. In this example, if the value in the accumulator is less than the value specified in the Compare instruction, SP60 will turn on energizing C30.

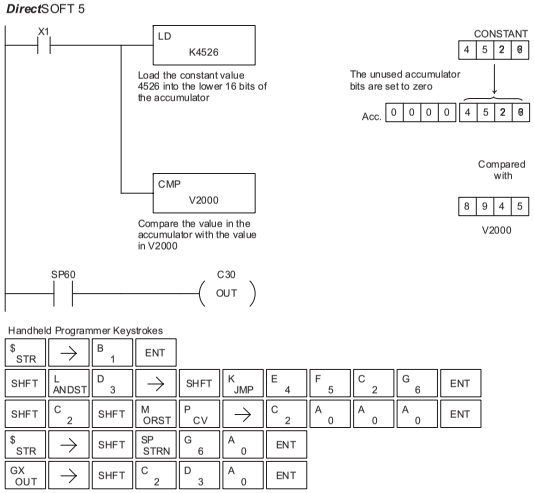

Compare Double (CMPD)

DS5	Used
HPP	Used

The Compare Double instruction is a 32–bit instruction that compares the value in the accumulator with the value (Aaaa), which is either two consecutive V-memory locations or an 8–digit (max.) constant. The corresponding status flag will be turned on indicating the result of the comparison.

```
CMPD
    A aaa
```

Operand Data Type	DL05 Range
..... A	aaa
V-memory V	See memory map
Pointer ..... P	See memory map
Constant ..... K	0–FFFFFFFF

Discrete Bit Flags	Description
SP60	On when the value in the accumulator is less than the instruction value.
SP61	On when the value in the accumulator is equal to the instruction value.
SP62	On when the value in the accumulator is greater than the instruction value.

NOTE: The status flags are only valid until another instruction that uses the same flags is executed.

In the following example when X1 is on, the value in V2000 and V2001 will be loaded into the accumulator using the Load Double instruction. The value in the accumulator is compared with the value in V2010 and V2011 using the CMPD instruction. The corresponding discrete status flag will be turned on indicating the result of the comparison. In this example, if the value in the accumulator is less than the value specified in the Compare instruction, SP60 will turn on energizing C30.

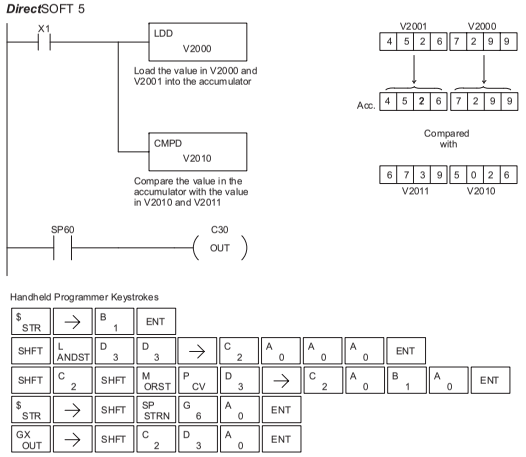

Math Instructions

Add (ADD)

DS5	Used
HPP	Used

Add is a 16 bit instruction that adds a BCD value in the accumulator with a BCD value in a V-memory location (Aaaa). The result resides in the accumulator.

```
ADD
    A aaa
```

Operand Data Type	DL05 Range
..... A	aaa
V-memory V	See memory map
Pointer ..... P	See memory map

Discrete Bit Flags	Description
SP63	On when the result of the instruction causes the value in the accumulator to be zero.
SP66	On when the 16 bit addition instruction results in a carry.
SP67	On when the 32 bit addition instruction results in a carry.
SP70	On anytime the value in the accumulator is negative.
SP75	On when a BCD instruction is executed and a NON–BCD number was encountered.

NOTE: The status flags are only valid until another instruction that uses the same flags is executed.

In the following example, when X1 is on, the value in V2000 will be loaded into the accumulator using the Load instruction. The value in the lower 16 bits of the accumulator are added to the value in V2006 using the Add instruction. The value in the accumulator is copied to V2010 using the Out instruction.

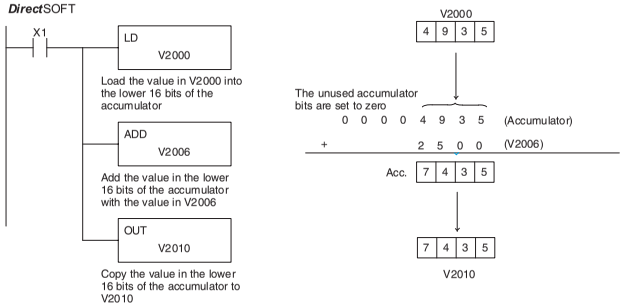

Handheld Programmer Keystrokes

$ STR	→	B 1	ENT						
SHFT	L ANDST	D 3	→	C 2	A 0	A 0	A 0	ENT	
SHFT	A 0	D 3	D 3	→	C 2	A 0	A 0	G 6	ENT
GX OUT	→	SHFT	V AND	C 2	A 0	B 1	A 0	ENT	

Add Double (ADDD)

DS5	Used
HPP	Used

Add Double is a 32 bit instruction that adds the BCD value in the accumulator with a BCD value (Aaaa), which is either two consecutive V-memory locations or an 8–digit (max.) BCD constant. The result resides in the accumulator.

```
ADDD
    A aaa
```

Operand Data Type	DL05 Range
..... A	aaa
V-memory V	See memory map
Pointer ..... P	See memory map
Constant ..... K	0–99999999

Discrete Bit Flags	Description
SP63	On when the result of the instruction causes the value in the accumulator to be zero.
SP66	On when the 16 bit addition instruction results in a carry.
SP67	On when the 32 bit addition instruction results in a carry.
SP70	On anytime the value in the accumulator is negative.
SP75	On when a BCD instruction is executed and a NON–BCD number was encountered.

NOTE: The status flags are only valid until another instruction that uses the same flags is executed.

In the following example, when X1 is on, the value in V2000 and V2001 will be loaded into the accumulator using the Load Double instruction. The value in the accumulator is added with the value in V2006 and V2007 using the Add Double instruction. The value in the accumulator is copied to V2010 and V2011 using the Out Double instruction.

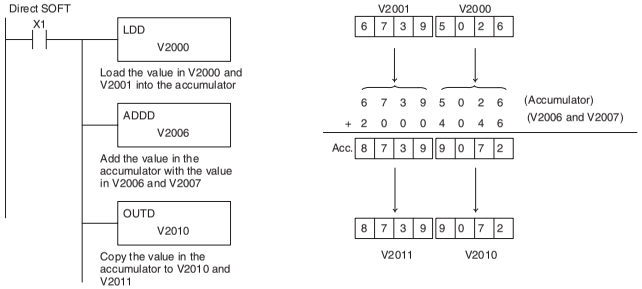

Handheld Programmer Keystrokes

$ STR	→	B 1	ENT						
SHFT	L ANDST	D 3	D 3	→	C 2	A 0	A 0	A 0	ENT
SHFT	A 0	D 3	D 3	D 3	→	C 2	A 0	A 0	G 6	ENT
GX OUT	SHFT	D 3	→	SHFT	V AND	C 2	A 0	B 1	A 0	ENT

Subtract (SUB)

DS5	Used
HPP	Used

Subtract is a 16 bit instruction that subtracts the BCD value (Aaaa) in a V-memory location from the BCD value in the lower 16 bits of the accumulator. The result resides in the accumulator.

```
SUB
    A aaa
```

Operand Data Type	DL05 Range
..... A	aaa
V-memory V	See memory map
Pointer ..... P	See memory map

Discrete Bit Flags	Description
SP63	On when the result of the instruction causes the value in the accumulator to be zero.
SP64	On when the 16 bit addition instruction results in a borrow
SP65	On when the 32 bit addition instruction results in a borrow
SP70	On anytime the value in the accumulator is negative.
SP75	On when a BCD instruction is executed and a NON–BCD number was encountered.

NOTE: The status flags are only valid until another instruction that uses the same flags is executed.

In the following example, when X1 is on, the value in V2000 will be loaded into the accumulator using the Load instruction. The value in V2006 is subtracted from the value in the accumulator using the Subtract instruction. The value in the accumulator is copied to V2010 using the Out instruction.

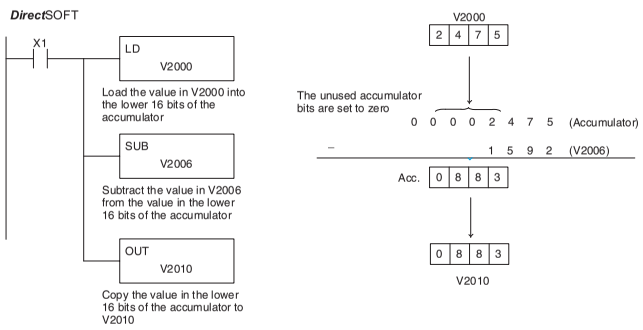

Handheld Programmer Keystrokes

$ STR	→	B 1	ENT								
SHFT	L ANDST	D 3	→	C 2	A 0	A 0	A 0	ENT			
SHFT	S RST	U ISG	B 1	→	SHFT	V AND	C 2	A 0	A 0	G 6	ENT
GX OUT	→	SHFT	V AND	C 2	A 0	B 1	A 0	ENT			

Subtract Double (SUBD)

DS5	Used
HPP	Used

Subtract Double is a 32 bit instruction that subtracts the BCD value (Aaaa), which is either two consecutive V-memory locations or an 8-digit (max.) constant, from the BCD value in the accumulator.

```
SUBD
    A aaa
```

Operand Data Type	DL05 Range
..... A	aaa
V-memory V	See memory map
Pointer ..... P	See memory map
Constant ..... K	0–99999999

Discrete Bit Flags	Description
SP63	On when the result of the instruction causes the value in the accumulator to be zero.
SP64	On when the 16 bit addition instruction results in a borrow
SP65	On when the 32 bit addition instruction results in a borrow
SP70	On anytime the value in the accumulator is negative.
SP75	On when a BCD instruction is executed and a NON–BCD number was encountered.

NOTE: The status flags are only valid until another instruction that uses the same flags is executed.

In the following example, when X1 is on, the value in V2000 and V2001 will be loaded into the accumulator using the Load Double instruction. The value in V2006 and V2007 is subtracted from the value in the accumulator. The value in the accumulator is copied to V2010 and V2011 using the Out Double instruction.

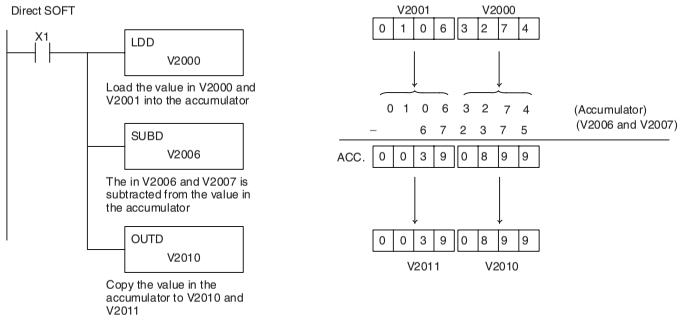

Handheld Programmer Keystrokes

$ STR	→	B 1	ENT								
SHFT	L ANDST	D 3	D 3	→	C 2	A 0	A 0	A 0	ENT		
SHFT	S RST	SHFT	U ISG	B 1	D 3	→	C 2	A 0	A 0	G 6	ENT
GX OUT	SHFT	D 3	→	C 2	A 0	B 1	A 0	ENT			

Multiply (MUL)

DS5	Used
HPP	Used

Multiply is a 16 bit instruction that multiplies the BCD value (Aaaa), which is either a V-memory location or a 4–digit (max.) constant, by the BCD value in the lower 16 bits of the accumulator The result can be up to 8 digits and resides in the accumulator.

```
MUL
  A aaa
```

Operand Data Type	DL05 Range
..... A	aaa
V-memory V	See memory map
Pointer ..... P	See memory map
Constant ..... K	0–99999999

Discrete Bit Flags	Description
SP63	On when the result of the instruction causes the value in the accumulator to be zero.
SP70	On anytime the value in the accumulator is negative.
SP75	On when a BCD instruction is executed and a NON–BCD number was encountered.

NOTE: The status flags are only valid until another instruction that uses the same flags is executed.

In the following example, when X1 is on, the value in V2000 will be loaded into the accumulator using the Load instruction. The value in V2006 is multiplied by the value in the accumulator. The value in the accumulator is copied to V2010 and V2011 using the Out Double instruction.

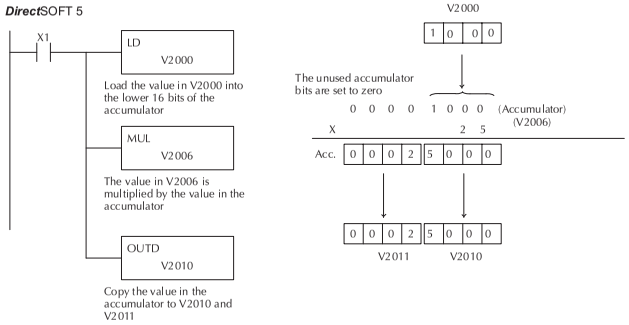

Handheld Programmer Keystrokes

$ STR	→	B 1	ENT						
SHFT	L ANDST	D 3	→	C 2	A 0	A 0	A 0	ENT	
SHFT	M ORST	U ISG	L ANDST	→	C 2	A 0	A 0	G 6	ENT
GX OUT	SHFT	D 3	→	C 2	A 0	B 1	A 0	ENT	

Multiply Double (MULD)

DS5	Used
HPP	Used

Multiply Double is a 32 bit instruction that multiplies the 8-digit BCD value in the accumulator by the 8-digit BCD value in the two consecutive V-memory locations specified in the instruction. The lower 8 digits of the results reside in the accumulator. Upper digits of the result reside in the accumulator stack.

```
MULD
  A aaa
```

Operand Data Type	DL05 Range
..... A	aaa
V-memory V	See memory map
Pointer ..... P	See memory map

Discrete Bit Flags	Description
SP63	On when the result of the instruction causes the value in the accumulator to be zero.
SP70	On anytime the value in the accumulator is negative.
SP75	On when a BCD instruction is executed and a NON–BCD number was encountered.

NOTE: Status flags are valid only until another instruction uses the same flag.

In the following example, when X1 is on, the constant Kbc614e hex will be loaded into the accumulator. When converted to BCD the number is "12345678". That number is stored in V1400 and V1401. After loading the constant K2 into the accumulator, we multiply it times 12345678, which is 24691356.

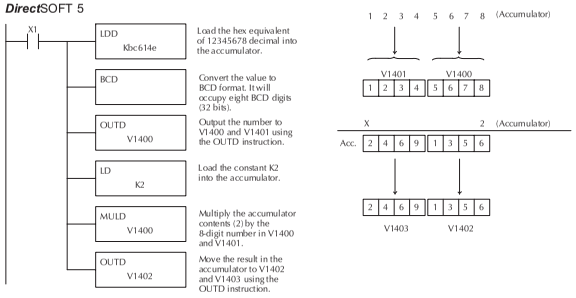

Handheld Programmer Keystrokes

$ STR	→	B 1	ENT																
SHFT	L ANDST	D 3	D 3	→	PREV	SHFT	B 1	C 2	SHFT	G 6	B 1	E 4	SHFT	E 4	ENT				
SHFT	B 1	C 2	D 3	ENT															
GX OUT	SHFT	D 3	→	B 1	E 4	A 0	A 0	ENT											
SHFT	L ANDST	D 3	→	PREV	C 2	ENT													
SHFT	M ORST	U ISG	L ANDST	D 3	→	B 1	E 4	A 0	A 0	ENT									
GX OUT	SHFT	D 3	→	B 1	E 4	A 0	C 2	ENT											

Divide (DIV)

DS5	Used
HPP	Used

Divide is a 16 bit instruction that divides the BCD value in the accumulator by a BCD value (Aaaa), which is either a V-memory location or a 4-digit (max.) constant. The first part of the quotient resides in the accumulator and the remainder resides in the first stack location.

```
DIV
    A aaa
```

Operand Data Type	DL05 Range
..... A	aaa
V-memory V	See memory map
Pointer ..... P	See memory map
Constant ..... K	0–99999999

Discrete Bit Flags	Description
SP53	On when the value of the operand is larger than the accumulator can work with.
SP63	On when the result of the instruction causes the value in the accumulator to be zero.
SP70	On anytime the value in the accumulator is negative.
SP75	On when a BCD instruction is executed and a NON–BCD number was encountered.

NOTE: The status flags are only valid until another instruction that uses the same flags is executed.

In the following example, when X1 is on, the value in V2000 will be loaded into the accumulator using the Load instruction. The value in the accumulator will be divided by the value in V2006 using the Divide instruction. The value in the accumulator is copied to V2010 using the Out instruction.

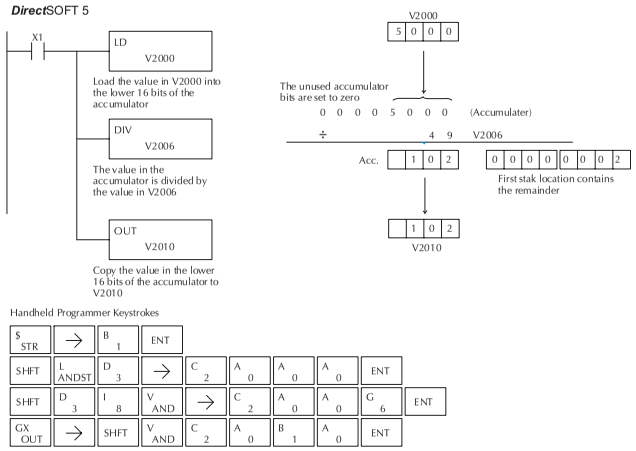

Divide Double (DIVD)

DS5	Used
HPP	Used

Divide Double is a 32 bit instruction that divides the BCD value in the accumulator by a BCD value (Aaaa), which must be obtained from two consecutive V-memory locations. (You cannot use a constant as the parameter in the box.) The first part of the quotient resides in the accumulator and the remainder resides in the first stack location.

```
DIVD
    A aaa
```

Operand Data Type	DL05 Range
..... A	aaa
V-memory V	See memory map
Pointer ..... P	See memory map

Discrete Bit Flags	Description
SP53	On when the value of the operand is larger than the accumulator can work with.
SP63	On when the result of the instruction causes the value in the accumulator to be zero.
SP70	On anytime the value in the accumulator is negative.
SP75	On when a BCD instruction is executed and a NON–BCD number was encountered.

NOTE: Status flags are valid only until another instruction uses the same flag.

In the following example, when X1 is on, the value in V1400 and V1401 will be loaded into the accumulator using the Load Double instruction. The value in the accumulator is divided by the value in V1420 and V1421 using the Divide Double instruction. The first part of the quotient resides in the accumulator an the remainder resides in the first stack location. The value in the accumulator is copied to V1500 and V1501 using the Out Double instruction.

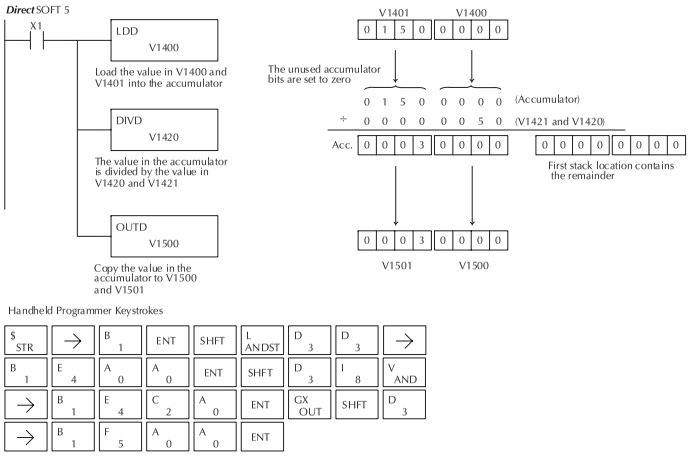

Increment (INC)

DS5	Used
HPP	Used

The Increment instruction increments a BCD value in a specified V-memory location by "1" each time the instruction is executed.

```
INC
    A aaa
```

Decrement (DEC)

DS5	Used
HPP	Used

The Decrement instruction decrements a BCD value in a specified V-memory location by "1" each time the instruction is executed.

```
DEC
    A aaa
```

5

Operand Data Type	DL05 Range
..... A	aaa
V-memory V	See memory map
Pointer ..... P	See memory map

Discrete Bit Flags	Description
SP63	On when the result of the instruction causes the value in the accumulator to be zero.
SP75	On when a BCD instruction is executed and a NON–BCD number was encountered.

NOTE: Status flags are valid only until another instruction uses the same flag.

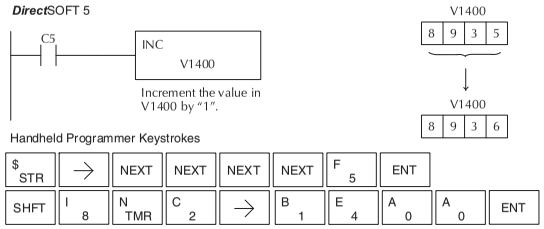

In the following increment example, when C5 is on the value in V1400 increases by one.

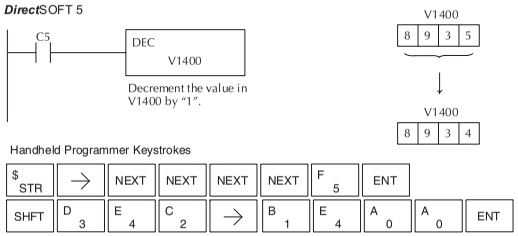

Increment Binary (INCB)

DS5	Used
HPP	Used

The Increment Binary instruction increments a binary value in a specified V-memory location by "1" each time the instruction is executed.

```
INCB
    A aaa
```

Operand Data Type	DL05 Range
..... A	aaa
V-memory V	See memory map
Pointer ..... P	See memory map

Discrete Bit Flags	Description
SP63	On when the result of the instruction causes the value in the accumulator to be zero.

5

In the following example when C5 is on, the binary value in V2000 is increased by 1.

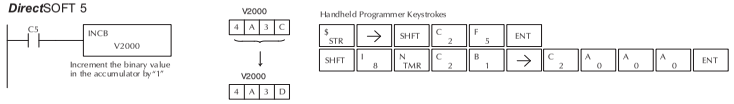

Decrement Binary (DECB)

DS5	Used
HPP	Used

The Decrement Binary instruction decrements a binary value in a specified V-memory location by "1" each time the instruction is executed.

```
DECB
    A aaa
```

Operand Data Type	DL05 Range
..... A	aaa
V-memory V	See memory map
Pointer ..... P	See memory map

Discrete Bit Flags	Description
SP63	On when the result of the instruction causes the value in the accumulator to be zero.

NOTE: The status flags are only valid until another instruction that uses the same flags is executed.

In the following example when C5 is on, the value in V2000 is decreased by 1.

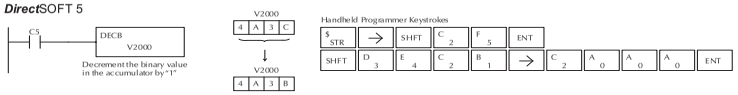

Add Binary (ADDB)

DS5	Used
HPP	Used

Add Binary is a 16 bit instruction that adds the binary value in the lower 16 bits of the accumulator with a binary value (Aaaa), which is either a V-memory location or a 16-bit constant. The result can be up to 32 bits and resides in the accumulator.

```
ADDB
  Aaaa
```

Operand Data Type	DL05 Range
..... A	aaa
V-memory V	See memory map
Pointer ..... P	See memory map
Constant ..... K	0–FFFF

Discrete Bit Flags	Description
SP63	On when the result of the instruction causes the value in the accumulator to be zero.
SP66	On when the 16 bit addition instruction results in a carry.
SP67	On when the 32 bit addition instruction results in a carry.
SP70	On anytime the value in the accumulator is negative.
SP73	On when a signed addition or subtraction results in a incorrect sign bit.

NOTE: Status flags are valid only until another instruction uses the same flag.

In the following example, when X1 is on, the value in V1400 will be loaded into the accumulator using the Load instruction. The binary value in the accumulator will be added to the binary value in V1420 using the Add Binary instruction. The value in the accumulator is copied to V1500 and V1501 using the Out Double instruction.

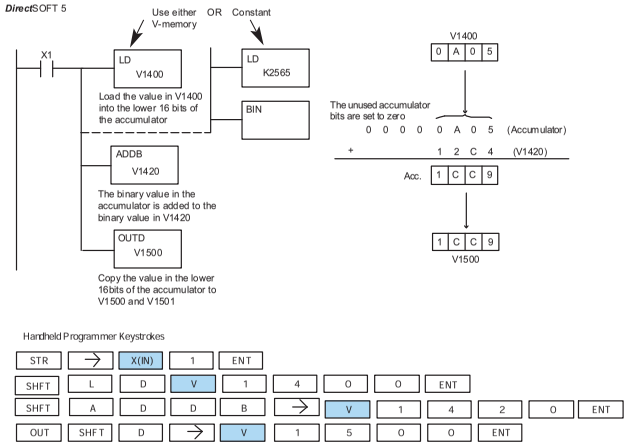

Subtract Binary (SUBB)

DS5	Used
HPP	Used

Subtract Binary is a 16 bit instruction that subtracts the binary value (Aaaa), which is either a V-memory location or a 4-digit (max.) binary constant, from the binary value in the accumulator. The result resides in the accumulator.

```
SUBB
  Aaaa
```

Operand Data Type	DL05 Range
..... A	aaa
V-memory V	See memory map
Pointer ..... P	See memory map
Constant ..... K	0–FFFF

Discrete Bit Flags	Description
SP63	On when the result of the instruction causes the value in the accumulator to be zero.
SP64	On when the 16 bit addition instruction results in a borrow
SP65	On when the 32 bit addition instruction results in a borrow
SP70	On any time the value in the accumulator is negative.

NOTE: Status flags are valid only until another instruction uses the same flag.

In the following example, when X1 is on, the value in V1400 will be loaded into the accumulator using the Load instruction. The binary value in V1420 is subtracted from the binary value in the accumulator using the Subtract Binary instruction. The value in the accumulator is copied to V1500 using the Out instruction.

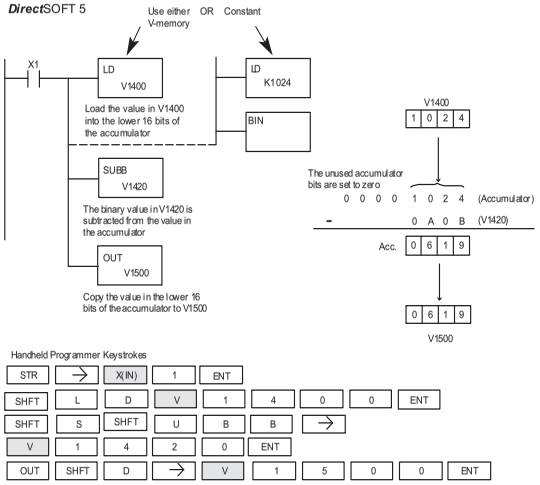

Multiply Binary (MULB)

DS5	Used
HPP	Used

Multiply Binary is a 16 bit instruction that multiplies the binary value (Aaaa), which is either a V-memory location or a 4-digit (max.) binary constant, by the binary value in the accumulator. The result can be up to 32 bits and resides in the accumulator.

```
MULB
  Aaaa
```

Operand Data Type	DL05 Range
..... A	aaa
V-memory V	See memory map
Pointer ..... P	See memory map
Constant ..... K	1–FFFF

Discrete Bit Flags	Description
SP63	On when the result of the instruction causes the value in the accumulator to be zero.
SP70	On any time the value in the accumulator is negative.

NOTE: Status flags are valid only until another instruction uses the same flag.

In the following example, when X1 is on, the value in V1400 will be loaded into the accumulator using the Load instruction. The binary value in V1420 is multiplied by the binary value in the accumulator using the Multiply Binary instruction. The value in the accumulator is copied to V1500 and V1501 using the Out Double instruction.

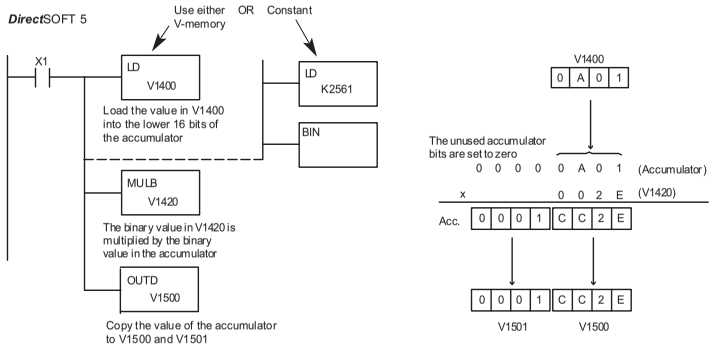

Handheld Programmer Keystrokes

STR	→	X	1	ENT							
SHFT	L	D	V	1	4	0	0	ENT			
SHFT	M	U	L	B	→	V	1	4	2	0	ENT
OUT	SHFT	D	→	V	1	5	0	0	ENT		

Divide Binary (DIVB)

DS5	Used
HPP	Used

Divide Binary is a 16 bit instruction that divides the binary value in the accumulator by a binary value (Aaaa), which is either a V-memory location or a 16-bit (max.) binary constant. The first part of the quotient resides in the accumulator and the remainder resides in the first stack location.

```
DIVB
  Aaaa
```

Operand Data Type	DL05 Range
..... A	aaa
V-memory V	See memory map
Pointer ..... P	See memory map
Constant ..... K	0–FFFF

Discrete Bit Flags	Description
SP53	On when the value of the operand is larger than the accumulator can work with.
SP63	On when the result of the instruction causes the value in the accumulator to be zero.
SP70	On anytime the value in the accumulator is negative.

NOTE: Status flags are valid only until another instruction uses the same flag.

In the following example, when X1 is on, the value in V1400 will be loaded into the accumulator using the Load instruction. The binary value in the accumulator is divided by the binary value in V1420 using the Divide Binary instruction. The value in the accumulator is copied to V1500 using the Out instruction.

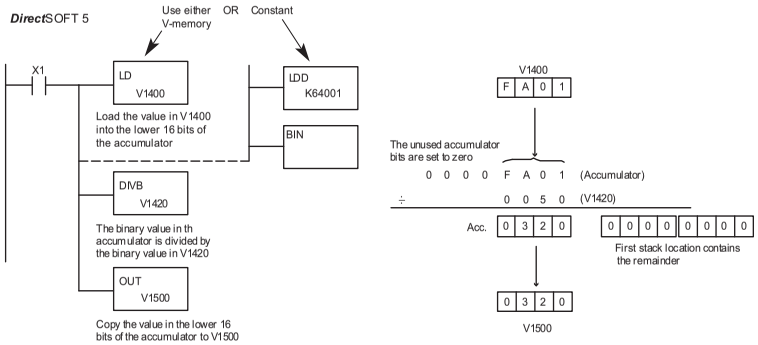

Handheld Programmer Keystrokes

STR	→	X	1	ENT							
SHFT	L	D	V	1	4	0	0	ENT			
SHFT	D	I	V	B	→	V	1	4	2	0	ENT
OUT	SHFT	D	→	V	1	5	0	0	ENT		

Bit Operation Instructions

Sum (SUM)

DS5	Used
HPP	Used

The Sum instruction counts number of bits that are set to "1" in the accumulator. The HEX result resides in the accumulator.

SUM

Discrete Bit Flags	Description
SP63	On when the result of the instruction causes the value in the accumulator to be zero.

5

In the following example, when X1 is on, the value formed by discrete locations X10–X17 is loaded into the accumulator using the Load Formatted instruction. The number of bits in the accumulator set to "1" is counted using the Sum instruction. The value in the accumulator is copied to V1500 using the Out instruction.

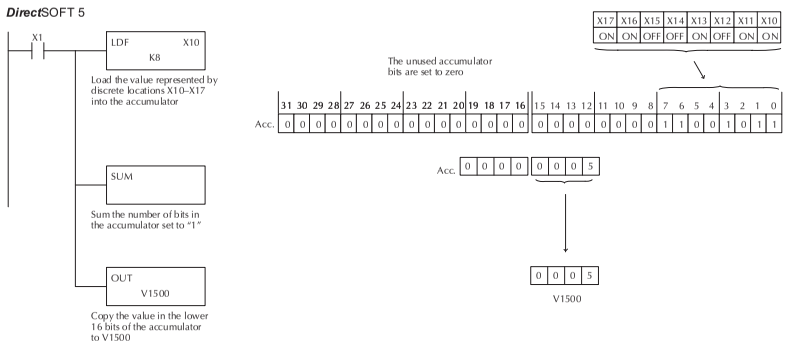

Handheld Programmer Keystrokes

$ STR	→	B 1	ENT						
SHFT	L ANDST	D 3	F 5	→	B 1	A 0	→	I 8	ENT
SHFT	S RST	SHFT	U ISG	M ORST	→	ENT			
GX OUT	→	PREV	PREV	PREV	B 1	F 5	A 0	A 0	ENT

Shift Left (SHFL)

DS5	Used
HPP	Used

Shift Left is a 32 bit instruction that shifts the bits in the accumulator a specified number (Aaaa) of places to the left. The vacant positions are filled with zeros and the bits shifted out of the accumulator are discarded.

SHFL
A aaa

Operand Data Type	DL05 Range
..... A	aaa
V-memory V	See memory map
Constant ..... K	1-32

Discrete Bit Flags	Description
SP63	On when the result of the instruction causes the value in the accumulator to be zero.
SP70	On anytime the value in the accumulator is negative.

5

In the following example, when X1 is on, the value in V2000 and V2001 will be loaded into the accumulator using the Load Double instruction. The bit pattern in the accumulator is shifted 2 bits to the left using the Shift Left instruction. The value in the accumulator is copied to V2010 and V2011 using the Out Double instruction.

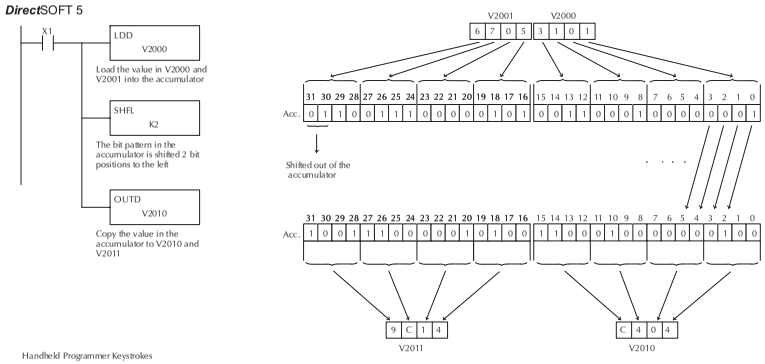

Handheld Programmer Keystrokes

$ STR	→	B 1	ENT						
SHFT	L ANDST	D 3	D 3	→	C 2	A 0	A 0	A 0	ENT
SHFT	S RST	SHFT	H 7	F 5	L ANDST	→	C 2	ENT	
GX OUT	SHFT	D 3	→	C 2	A 0	B 1	A 0	ENT	

Shift Right (SHFR)

DS5	Used
HPP	Used

Shift Right is a 32 bit instruction that shifts the bits in the accumulator a specified number (Aaaa) of places to the right. The vacant positions are filled with zeros and the bits shifted out of the accumulator are lost.

```
SHFR
    A aaa
```

Operand Data Type	DL05 Range
..... A	aaa
V-memory V	See memory map
Constant ..... K	1-32

Discrete Bit Flags	Description
SP63	On when the result of the instruction causes the value in the accumulator to be zero.
SP70	On anytime the value in the accumulator is negative.

In the following example, when X1 is on, the value in V2000 and V2001 will be loaded into the accumulator using the Load Double instruction. The bit pattern in the accumulator is shifted 2 bits to the right using the Shift Right instruction. The value in the accumulator is copied to V2010 and V2011 using the Out Double instruction.

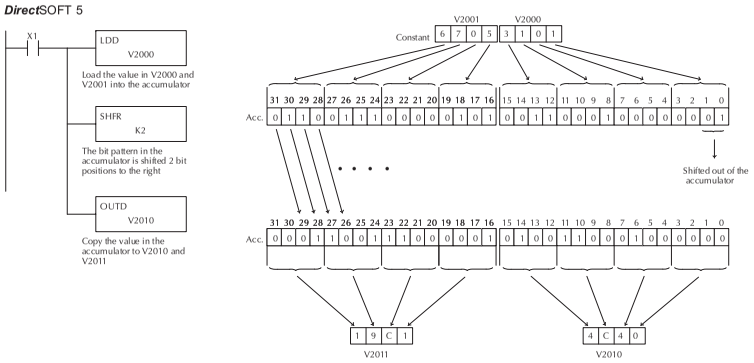

Handheld Programmer Keystrokes

$ STR	→	B 1	ENT							
SHFT	L ANDST	D 3	D 3	→	C 2	A 0	A 0	A 0	ENT	
SHFT	S RST	SHFT	H 7	F 5	R ORN	→	C 2	ENT		
GX OUT	SHFT	D 3	→	C 2	A 0	B 1	A 0	ENT		

Encode (ENCO)

DS5	Used
HPP	Used

The Encode instruction encodes the bit position in the accumulator having a value of 1, and returns the appropriate binary representation. If the most significant bit is set to 1 (Bit 31), the Encode instruction would place the value HEX 1F (decimal 31) in the accumulator. If the value to be encoded is 0000 or 0001, the instruction will place a zero in the accumulator. If the value to be encoded has more than one bit position set to a "1", the least significant "1" will be encoded and SP53 will be set on.

```
ENCO
```

Discrete Bit Flags	Description
SP63	On when the result of the instruction causes the value in the accumulator to be zero.
SP70	On anytime the value in the accumulator is negative.

NOTE: The status flags are only valid until another instruction that uses the same flags is executed.

In the following example, when X1 is on, The value in V2000 is loaded into the accumulator using the Load instruction. The bit position set to a "1" in the accumulator is encoded to the corresponding 5 bit binary value using the Encode instruction. The value in the lower 16 bits of the accumulator is copied to V2010 using the Out instruction.

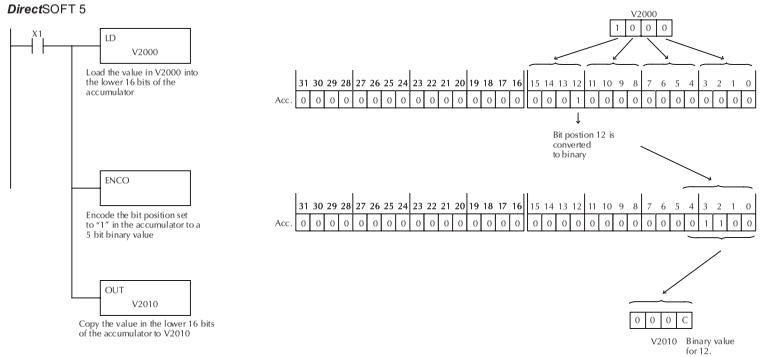

Handheld Programmer Keystrokes

$ STR	→	B 1	ENT					
SHFT	L ANDST	D 3	→	C 2	A 0	A 0	A 0	ENT
SHFT	E 4	N TMR	C 2	O INST#	ENT			
GX OUT	→	SHFT	V AND	C 2	A 0	B 1	A 0	ENT

Decode (DECO)

DS5	Used
HPP	Used

The Decode instruction decodes a 5 bit binary value of 0–31 (0–1F HEX) in the accumulator by setting the appropriate bit position to a 1. If the accumulator contains the value F (HEX), bit 15 will be set in the accumulator. If the value to be decoded is greater than 31, the number is divided by 32 until the value is less than 32 and then the value is decoded.

DECO

In the following example when X1 is on, the value formed by discrete locations X10–X14 is loaded into the accumulator using the Load Formatted instruction. The five bit binary pattern in the accumulator is decoded by setting the corresponding bit position to a "1" using the Decode instruction.

5

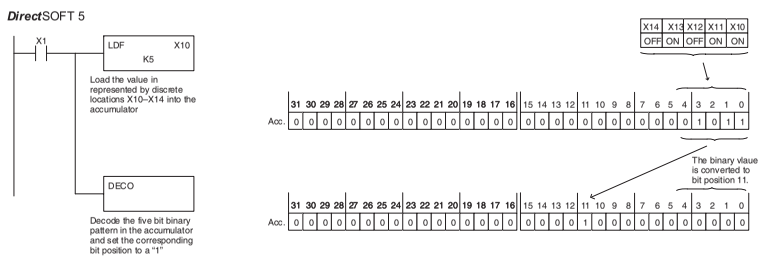

Handheld Programmer Keystrokes

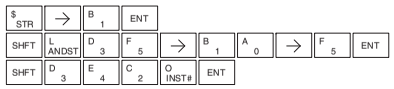

Number Conversion Instructions (Accumulator)

Binary (BIN)

DS5	Used
HPP	Used

The Binary instruction converts a BCD value in the accumulator to the equivalent binary value. The result resides in the accumulator.

BIN

In the following example, when X1 is on, the value in V2000 and V2001 is loaded into the accumulator using the Load Double instruction. The BCD value in the accumulator is converted to the binary (HEX) equivalent using the BIN instruction. The binary value in the accumulator is copied to V2010 and V2011 using the Out Double instruction. (The handheld programmer will display the binary value in V2010 and V2011 as a HEX value.)

5

Discrete Bit Flags	Description
SP63	On when the result of the instruction causes the value in the accumulator to be zero.
SP70	On anytime the value in the accumulator is negative.
SP75	On when a BCD instruction is executed and a NON–BCD number was encountered.

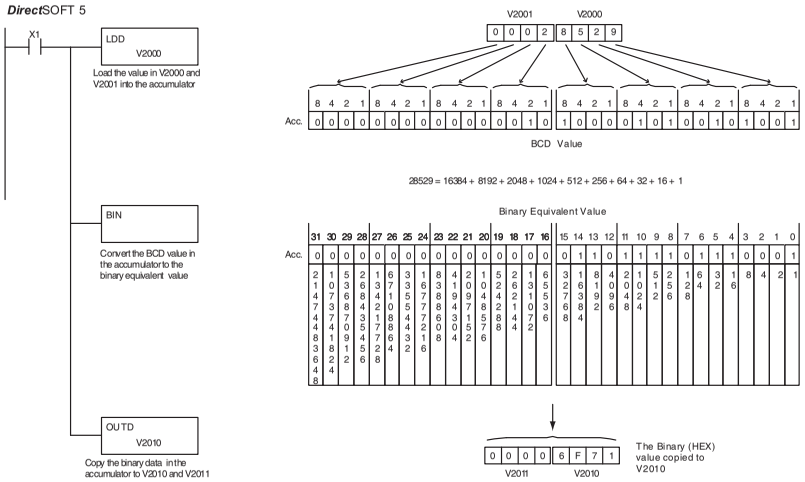

Handheld Programmer Keystrokes

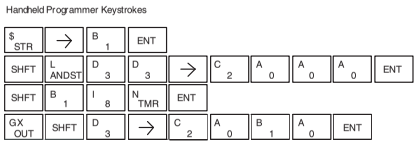

Binary Coded Decimal (BCD)

DS5	Used
HPP	Used

The Binary Coded Decimal instruction converts a binary value in the accumulator to the equivalent BCD value. The result resides in the accumulator.

BCD

In the following example, when X1 is on, the binary (HEX) value in V2000 and V2001 is loaded into the accumulator using the Load Double instruction. The binary value in the accumulator is converted to the BCD equivalent value using the BCD instruction. The BCD value in the accumulator is copied to V2010 and V2011 using the Out Double instruction.

Discrete Bit Flags	Description
SP63	On when the result of the instruction causes the value in the accumulator to be zero.
SP70	On anytime the value in the accumulator is negative.

5

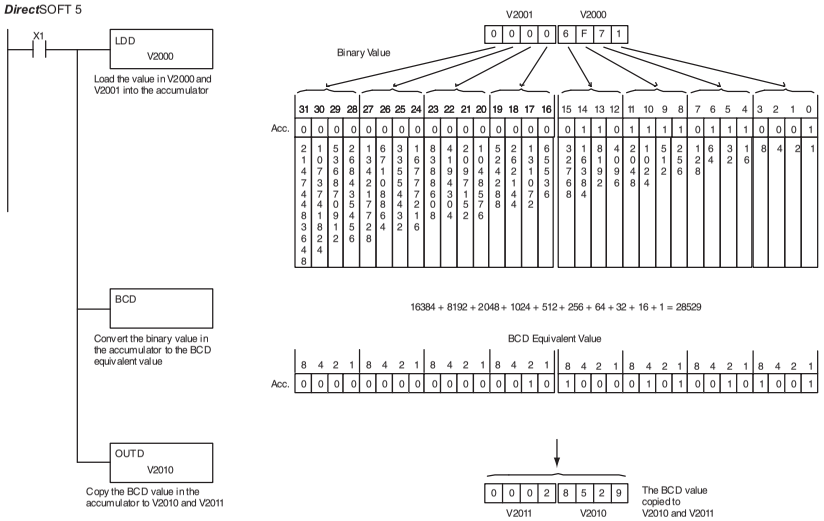

Handheld Programmer Keystrokes

$ STR	→	B 1	ENT								
SHIFT	L ANDST	D 3	D 3	→	C 2	A 0	A 0	A 0	ENT		
SHIFT	B 1	C 2	D 3	ENT							
GX OUT	SHIFT	D 3	→	C 2	A 0	B 1	A 0	ENT			

Invert (INV)

DS5	Used
HPP	Used

The Invert instruction inverts or takes the one's complement of the 32 bit value in the accumulator. The result resides in the accumulator.

INV

In the following example, when X1 is on, the value in V2000 and V2001 will be loaded into the accumulator using the Load Double instruction. The value in the accumulator is inverted using the Invert instruction. The value in the accumulator is copied to V2010 and V2011 using the Out Double instruction.

5

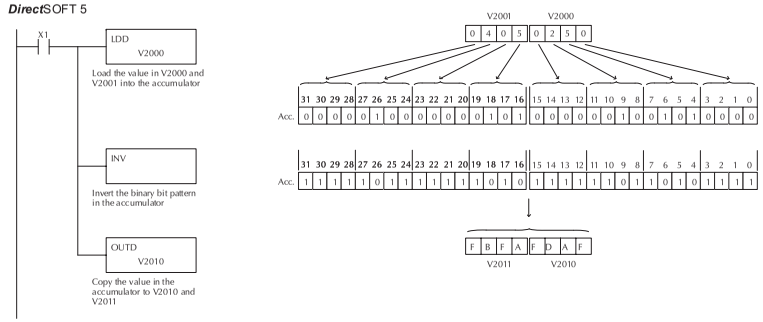

Handheld Programmer Keystrokes

$ STR	→	B 1	ENT								
SHIFT	L ANDST	D 3	D 3	→	C 2	A 0	A 0	A 0	ENT		
SHIFT	I 8	N TMR	V AND	ENT							
GX OUT	SHIFT	D 3	→	C 2	A 0	B 1	A 0	ENT			

ASCII to HEX (ATH)

DS5	Used
HPP	Used

The ASCII TO HEX instruction converts a table of ASCII values to a specified table of HEX values. ASCII values are two digits and their HEX equivalents are one digit. This means an ASCII table of four V-memory locations would only require two V-memory locations for the equivalent HEX table. The function parameters are loaded into the accumulator stack and the accumulator by two additional instructions. Listed below are the steps necessary to program an ASCII to HEX table function. The example on the following page shows a program for the ASCII to HEX table function.

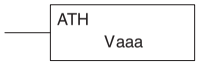

Step 1: — Load the number of V-memory locations for the ASCII table into the first level of the accumulator stack.

Step 2: — Load the starting V-memory location for the ASCII table into the accumulator. This parameter must be a HEX value.

Step 3: — Specify the starting V-memory location (Vaaa) for the HEX table in the ATH instruction.

Helpful Hint: — For parameters that require HEX values when referencing memory locations, the LDA instruction can be used to convert an octal address to the HEX equivalent and load the value into the accumulator.

Operand Data Type	DL05 Range
	aaa
V-memory V	See memory map

Discrete Bit Flags	Description
SP53	On when the value of the operand is larger than the accumulator can work with.

In the example on the following page, when X1 is ON the constant (K4) is loaded into the accumulator using the Load instruction and will be placed in the first level of the accumulator stack when the next Load instruction is executed. The starting location for the ASCII table (V1400) is loaded into the accumulator using the Load Address instruction. The starting location for the HEX table (V1600) is specified in the ASCII to HEX instruction. The table below lists valid ASCII values for ATH conversion.

ASCII Values Valid for ATH Conversion			
ASCII Value	HEX Value	ASCII Value	HEX Value
30	0	38	8
31	1	39	9
32	2	41	A
33	3	42	B
34	4	43	C
35	5	44	D
36	6	45	E
37	7	46	F

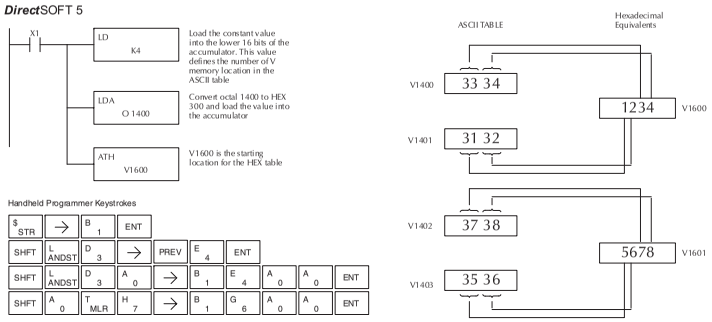

HEX to ASCII (HTA)

DS5	Used
HPP	Used

The HEX to ASCII instruction converts a table of HEX values to a specified table of ASCII values. HEX values are one digit and their ASCII equivalents are two digits.

This means a HEX table of two V-memory locations would require four V-memory locations for the equivalent ASCII table. The function parameters are loaded into the accumulator stack and the accumulator by two additional instructions. Listed below are the steps necessary to program a HEX to ASCII table function. The example on the following page shows a program for the HEX to ASCII table function.

Step 1: — Load the number of V-memory locations in the HEX table into the first level of the accumulator stack.

Step 2: — Load the starting V-memory location for the HEX table into the accumulator. This parameter must be a HEX value.

Step 3: — Specify the starting V-memory location (Vaaa) for the ASCII table in the HTA instruction.

Helpful Hint: — For parameters that require HEX values when referencing memory locations, the LDA instruction can be used to convert an octal address to the HEX equivalent and load the value into the accumulator.

Operand Data Type	DL05 Range
	aaa
V-memory V	See memory map

Discrete Bit Flags	Description
SP53	On when the value of the operand is larger than the accumulator can work with.

In the following example, when X1 is ON the constant (K2) is loaded into the accumulator using the Load instruction. The starting location for the HEX table (V1500) is loaded into the accumulator using the Load Address instruction. The starting location for the ASCII table (V1400) is specified in the HEX to ASCII instruction.

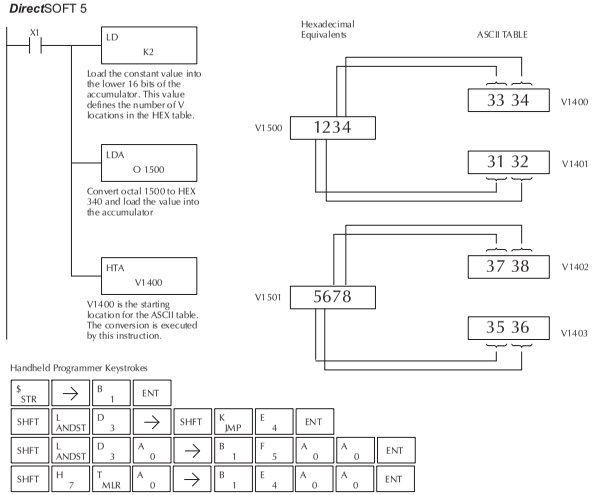

The table below lists valid ASCII values for HTA conversion.

ASCII Values Valid for HTA Conversion			
Hex Value	ASCII Value	Hex Value	ASCII Value
0	30	8	38
1	31	9	39
2	32	A	41
3	33	B	42
4	34	C	43
5	35	D	44
6	36	E	45
7	37	F	46

Gray Code (GRAY)

DS5	Used
HPP	Used

The Gray code instruction converts a 16 bit gray code value to a BCD value. The BCD conversion requires 10 bits of the accumulator. The upper 22 bits are set to "0". This instruction is designed for use with devices (typically encoders) that use the grey code numbering scheme. The Gray Code instruction will directly convert a gray code number to a BCD number for devices having a resolution of 512 or 1024 counts per revolution. If a device having a resolution of 360 counts per revolution is to be used you must subtract a BCD value of 76 from the converted value to obtain the proper result. For a device having a resolution of 720 counts per revolution you must subtract a BCD value of 152.

In the following example, when X1 is ON the binary value represented by X10–X27 is loaded into the accumulator using the Load Formatted instruction. The gray code value in the accumulator is converted to BCD using the Gray Code instruction. The value in the lower 16 bits of the accumulator is copied to V2010.

Discrete Bit Flags	Description
SP63	On when the result of the instruction causes the value in the accumulator to be zero.
SP70	On anytime the value in the accumulator is negative.

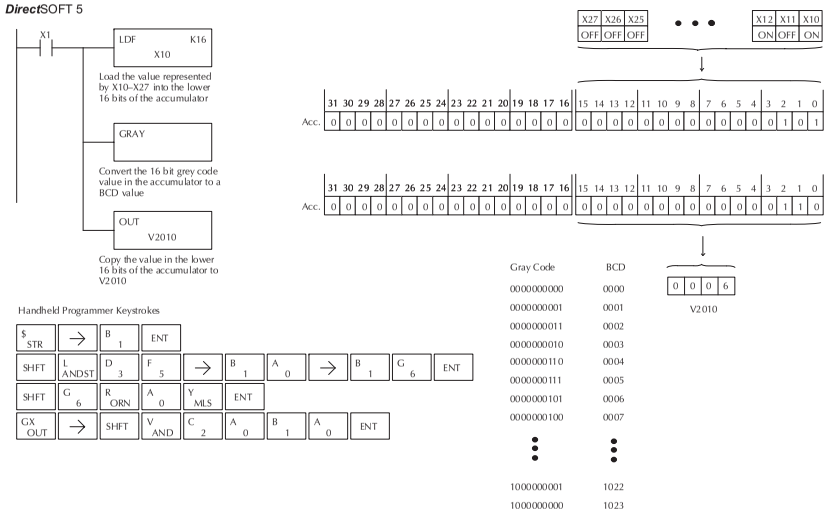

Shuffle Digits (SFLDGT)

DS5	Used
HPP	Used

SFLDGT

The Shuffle Digits instruction shuffles a maximum of 8 digits rearranging them in a specified order. This function requires parameters to be loaded into the first level of the accumulator stack and the accumulator with two additional instructions. Listed below are the steps necessary to use the shuffle digit function. The example on the following page shows a program for the Shuffle Digits function.

Step 1:— Load the value (digits) to be shuffled into the first level of the accumulator stack.

Step 2:— Load the order that the digits will be shuffled to into the accumulator.

Step 3:— Insert the SFLDGT instruction.

5

NOTE: If the number used to specify the order contains a 0 or 9–F, the corresponding position will be set to 0.

Discrete Bit Flags	Description
SP63	On when the result of the instruction causes the value in the accumulator to be zero.
SP70	On anytime the value in the accumulator is negative.

Shuffle Digits Block Diagram

There are a maximum of 8 digits that can be shuffled. The bit positions in the first level of the accumulator stack defines the digits to be shuffled. They correspond to the bit positions in the accumulator that define the order the digits will be shuffled. The digits are shuffled and the result resides in the accumulator.

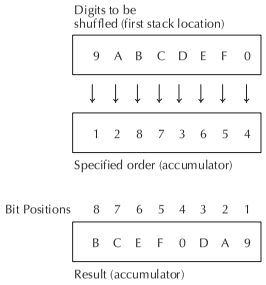

In the following example when X1 is on, The value in the first level of the accumulator stack will be reorganized in the order specified by the value in the accumulator.

Example A shows how the shuffle digits works when 0 or 9 –F is not used when specifying the order the digits are to be shuffled. Also, there are no duplicate numbers in the specified order.

Example B shows how the shuffle digits works when a 0 or 9–F is used when specifying the order the digits are to be shuffled. Notice when the Shuffle Digits instruction is executed, the bit positions in the first stack location that had a corresponding 0 or 9–F in the accumulator (order specified) are set to "0".

Example C shows how the shuffle digits works when duplicate numbers are used specifying the order the digits are to be shuffled. Notice when the Shuffle Digits instruction is executed, the most significant duplicate number in the order specified is used in the result.

5

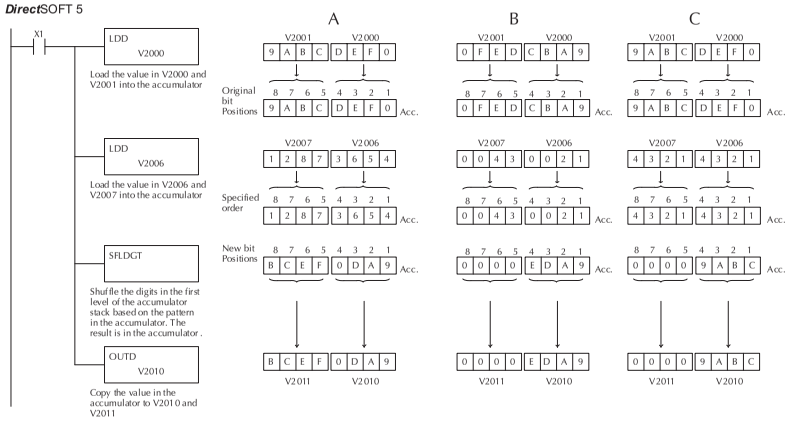

Handheld Programmer Keystrokes

$ STR	→	B 1	ENT						
SHFT	L ANDST	D 3	D 3	→	C 2	A 0	A 0	A 0	ENT
SHFT	L ANDST	D 3	D 3	→	C 2	A 0	A 0	G 6	ENT
SHFT	S RST	SHFT	F 5	L ANDST	D 3	G 6	T MLR	ENT	
GX OUT	SHFT	D 3	→	C 2	A 0	B 1	A 0	ENT	

Table Instructions

Move (MOV)

DS5	Used
HPP	Used

MOV
V aaa

The Move instruction moves the values from a V-memory table to another V-memory table the same length (a table is a consecutive group of V-memory locations). The function parameters are loaded into the first level of the accumulator stack and the accumulator by two additional instructions. The MOV instruction can be used to write data to non-volatile V-memory (see Appendix F). Listed below are the steps necessary to program the MOV function.

5

- Step 1:— Load the number of V-memory locations to be moved into the first level of the accumulator stack. This parameter is a HEX value (K40 max, 100 octal).
- Step 2:— Load the starting V-memory location for the locations to be moved into the accumulator. This parameter is a HEX value.
- Step 3:— Insert the MOVE instruction which specifies starting V-memory location (Vaaa) for the destination table.

Helpful Hint: — For parameters that require HEX values when referencing memory locations, the LDA instruction can be used to convert an octal address to the HEX equivalent and load the value into the accumulator.

Operand Data Type	DL05 Range
..... A	aaa
V-memory V	See memory map
Pointer ..... P	See memory map

Discrete Bit Flags	Description
SP53	On when the value of the operand is larger than the accumulator can work with.

In the following example, when X1 is on, the constant value (K6) is loaded into the accumulator using the Load instruction. This value specifies the length of the table and is placed in the first stack location after the Load Address instruction is executed. The octal address 2000 (V2000), the starting location for the source table is loaded into the accumulator. The destination table location (V2030) is specified in the Move instruction.

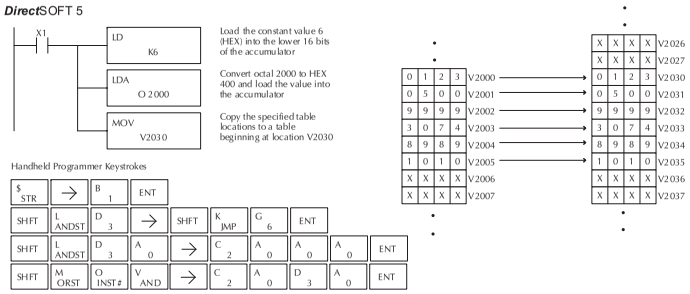

Move Memory Cartridge (MOVMC)
and
Load Label (LDLBL)

DS5	Used
HPP	Used

MOVMC
V aaa

LDLBL
K aaa

The Move Memory Cartridge and the Load Label instructions are used to copy data from program ladder memory to V-memory. The Load Label instruction is used with the MOVMC instruction when copying data *from* program ladder memory to V-memory.

To copy data from the program ladder memory to V-memory, the function parameters are loaded into the first two levels of the accumulator stack and the accumulator by two additional instructions. Listed below are the steps necessary to program the Move Memory Cartridge and Load Label functions.

5

- Step 1:— Load the number of words to be copied into the second level of the accumulator stack.
- Step 2:— Load the offset for the data label area in ladder memory and the beginning of the V-memory block into the first level of the stack.
- Step 3:— Load the *source data label* (LDLBL Kaaa) into the accumulator when copying data from ladder memory to V-memory. This is the source location of the value.
- Step 4:— Insert the MOVMC instruction which specifies destination in V-memory (Vaaa). This is the copy destination.

Operand Data Type	DL05 Range
..... A	aaa
V-memory V	See memory map

Copy Data From a Data Label Area to V-memory

In the example to the right, data is copied from a Data Label Area to V-memory. When X1 is on, the constant value (K4) is loaded into the accumulator using the Load instruction. This value specifies the length of the table and is placed in the second stack location after the next Load and Load Label (LDLBL) instructions are executed. The constant value (K0) is loaded into the accumulator, specifying the offset for the source and destination data. It is placed in the first stack location after the LDLBL instruction is executed. The source address where data is being copied from is loaded into the accumulator using the LDLBL instruction. The MOVMC instruction specifies the destination starting location and executes the copying of data from the Data Label Area to V-memory.

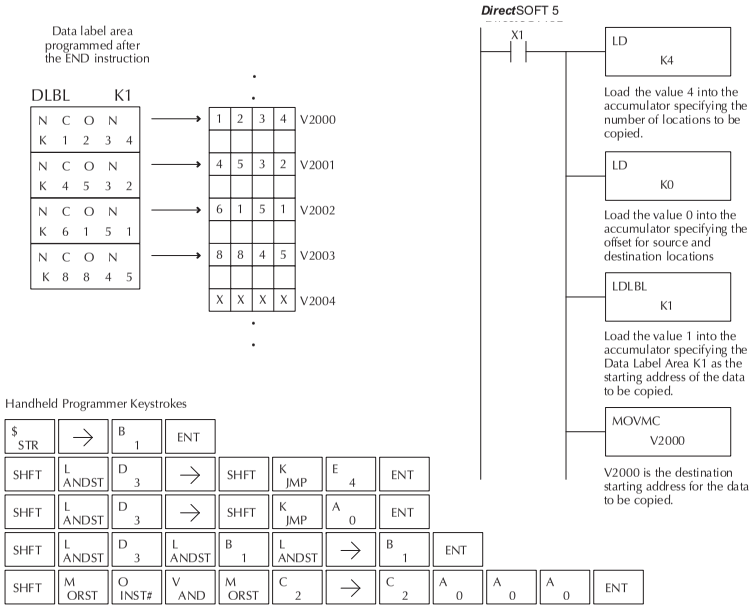

CPU Control Instructions

No Operation (NOP)

DS5	Used
HPP	N/A

The No Operation is an empty (not programmed) memory location.

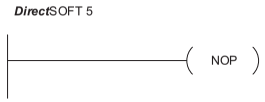

End (END)

DS5	Used
HPP	N/A

The End instruction marks the termination point of the normal program scan. An End instruction is required at the end of the main program body. If the End instruction is omitted an error will occur and the CPU will not enter the Run Mode. Data labels, subroutines and interrupt routines are placed after the End instruction. The End instruction is not conditional; therefore, no input contact is allowed.

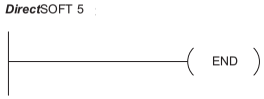

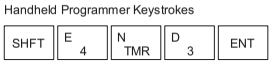

Stop (STOP)

DS5	Used
HPP	N/A

The Stop instruction changes the operational mode of the CPU from Run to Program (Stop) mode. This instruction is typically used to stop PLC operation in an error condition.

In the following example, when C0 turns on, the CPU will stop operation and switch to the program mode.

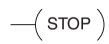

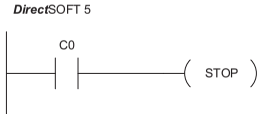

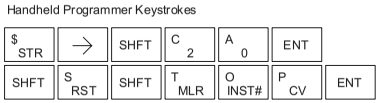

Discrete Bit Flags	Description
SP16	On when the DL05 goes into the TERM_PRG mode.
SP53	On when the DL05 goes into the PRG mode.

Reset Watch Dog Timer (RSTWT)

DS5	Used
HPP	N/A

The Reset Watch Dog Timer instruction resets the CPU scan timer. The default setting for the watch dog timer is 200ms. Scan times very seldom exceed 200ms, but it is possible. For/next loops, subroutines, interrupt routines, and table instructions can be programmed such that the scan becomes longer than 200ms. When instructions are used in a manner that could exceed the watch dog timer setting, this instruction can be used to reset the timer.

—(RSTWT)

A software timeout error (E003) will occur and the CPU will enter the program mode if the scan time exceeds the watch dog timer setting. Placement of the RSTWT instruction in the program is very important. The instruction has to be executed before the scan time exceeds the watch dog timer's setting.

If the scan time is consistently longer than the watch dog timer's setting, the timeout value may be permanently increased from the default value of 200ms by AUX 55 on the HPP or the appropriate auxiliary function in your programming package. This eliminates the need for the RSTWT instruction.

In the following example the CPU scan timer will be reset to 0 when the RSTWT instruction is executed. See the For/Next instruction for a detailed example.

DirectSOFT 5

Handheld Programmer Keystrokes

SHFT	R ORN	S RST	T MLR	W ANDN	T MLR	ENT

Program Control Instructions

For / Next (FOR) (NEXT)

DS5	Used
HPP	Used

The For and Next instructions are used to execute a section of ladder logic between the For and Next instruction a specified numbers of times. When the For instruction is enabled, the program will loop the specified number of times. If the For instruction is not energized the section of ladder logic between the For and Next instructions is not executed.

A aaa
—(FOR)

For / Next instructions cannot be nested. The normal I/O update and CPU housekeeping is suspended while executing the For / Next loop. The program scan can increase significantly, depending on the amount of times the logic between the For and Next instruction is executed. With the exception of immediate I/O instructions, I/O will not be updated until the program execution is completed for that scan. Depending on the length of time required to complete the program execution, it may be necessary to reset the watch dog timer inside of the For / Next loop using the RSTWT instruction.

—(NEXT)

Operand Data Type	DL05 Range
..... A	aaa
V-memory V	See memory map
Constant ..... K	1-9999

In the following example, when X1 is on, the application program inside the For / Next loop will be executed three times. If X1 is off the program inside the loop will not be executed. The immediate instructions may or may not be necessary depending on your application. Also, The RSTWT instruction is not necessary if the For / Next loop does not extend the scan time larger the Watch Dog Timer setting. For more information on the Watch Dog Timer, refer to the RSTWT instruction.

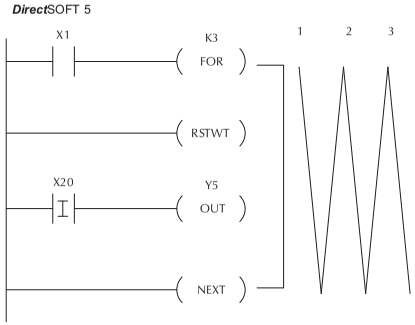

Handheld Programmer Keystrokes

$ STR	→	B 1	ENT			
SHFT	F 5	O INST#	R ORN	→	D 3	ENT
SHFT	R ORN	S RST	T MLR	W AND N	T MLR	ENT
$ STR	SHFT	I 8	→	C 2	A 0	ENT
GX OUT	→	F 5	ENT			
SHFT	N TMR	E 4	X SET	T MLR	ENT	

Goto Subroutine (GTS) (SBR)

DS5	Used
HPP	Used

The Goto Subroutine instruction allows a section of ladder logic to be placed outside the main body of the program execute only when needed. There can be a maximum of 64 GTS instructions and 64 SBR instructions used in a program. The GTS instructions can be nested up to 8 levels. An error E412 will occur if the maximum limits are exceeded. Typically this will be used in an application where a block of program logic may be slow to execute and is not required to execute every scan. The subroutine label and all associated logic is placed after the End statement in the program. When the subroutine is called from the main program, the CPU will execute the subroutine (SBR) with the same constant number (K) as the GTS instruction which called the subroutine.

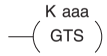

By placing code in a subroutine it is only scanned and executed when needed since it resides after the End instruction. Code which is not scanned does not impact the overall scan time of the program.

Operand Data Type	DL05 Range
.....A	aaa
Constant .....K	1-FFFF

Subroutine Return (RT)

DS5	Used
HPP	Used

When a Subroutine Return is executed in the subroutine the CPU will return to the point in the main body of the program from which it was called. The Subroutine Return is used as termination of the subroutine which must be the last instruction in the subroutine and is a stand alone instruction (no input contact on the rung).

Subroutine Return Conditional (RTC)

DS5	Used
HPP	Used

The Subroutine Return Conditional instruction is a optional instruction used with a input contact to implement a conditional return from the subroutine. The Subroutine Return (RT) is still required for termination of the Subroutine.

In the following example, when X1 is on, Subroutine K3 will be called. The CPU will jump to the Subroutine Label K3 and the ladder logic in the subroutine will be executed. If X35 is on the CPU will return to the main program at the RTC instruction. If X35 is not on Y0–Y17 will be reset to off and then the CPU will return to the main body of the program.

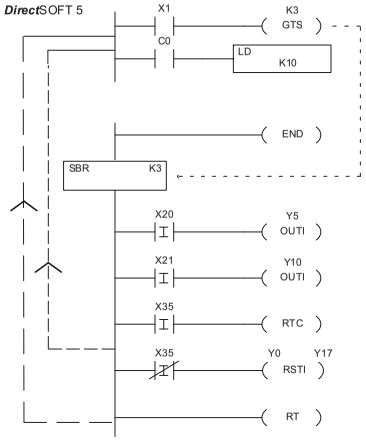

Handheld Programmer Keystrokes

$ STR	→	B 1	ENT						
SHFT	G 6	T MLR	S RST	→	D 3	ENT			
?									
SHFT	E 4	N TMR	D 3	ENT					
SHFT	S RST	SHFT	B 1	R ORN	→	D 3	ENT		
$ STR	SHFT	I 8	→	C 2	A 0	ENT			
GX OUT	SHFT	I 8	→	F 5	ENT				
$ STR	SHFT	I 8	→	C 2	B 1	ENT			
GX OUT	SHFT	I 8	→	B 1	A 0	ENT			
$ STR	SHFT	I 8	→	D 3	F 5	ENT			
SHFT	R ORN	T MLR	C 2	ENT					
SP STRN	SHFT	I 8	→	D 3	F 5	ENT			
S RST	SHFT	I 8	→	A 0	→	B 1	H 7	ENT	
SHFT	R ORN	T MLR	ENT						

In the following example, when X1 is on, Subroutine K3 will be called. The CPU will jump to the Subroutine Label K3 and the ladder logic in the subroutine will be executed. The CPU will return to the main body of the program after the RT instruction is executed.

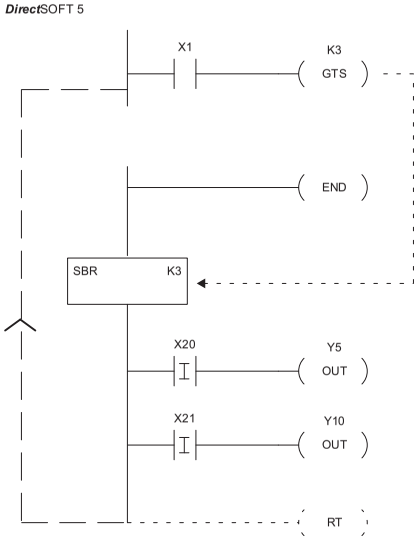

Handheld Programmer Keystrokes

$ STR	→	B 1	ENT						
SHFT	G 6	T MLR	S RST	→	D 3	ENT			
• • •									
SHFT	E 4	N TMR	D 3	ENT					
SHFT	S RST	SHFT	B 1	R ORN	→	D 3	ENT		
$ STR	SHFT	I 8	→	C 2	A 0	ENT			
GX OUT	→	F 5	ENT						
$ STR	SHFT	I 8	→	C 2	B 1	ENT			
GX OUT	→	B 1	A 0	ENT					
SHFT	R ORN	T MLR	ENT						

Master Line Set (MLS)

DS5	Used
HPP	Used

The Master Line Set instruction allows the program to control sections of ladder logic by forming a new power rail controlled by the main left power rail. The main left rail is always master line 0. When a MLS K1 instruction is used, a new power rail is created at level 1. Master Line Sets and Master Line Resets can be used to nest power rails up to seven levels deep.

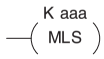

Operand Data Type	DL05 Range
..... A	aaa
Constant ..... K	1-7

5

Master Line Reset (MLR)

DS5	Used
HPP	Used

The Master Line Reset instruction marks the end of control for the corresponding MLS instruction. The MLR reference is one less than the corresponding MLS.

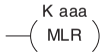

Understanding Master Control Relays

Operand Data Type	DL05 Range
..... A	aaa
Constant ..... K	0-7

The Master Line Set (MLS) and Master Line Reset (MLR) instructions allow you to quickly enable (or disable) sections of the RLL program. This provides program control flexibility. The following example shows how the MLS and MLR instructions operate by creating a sub power rail for control logic.

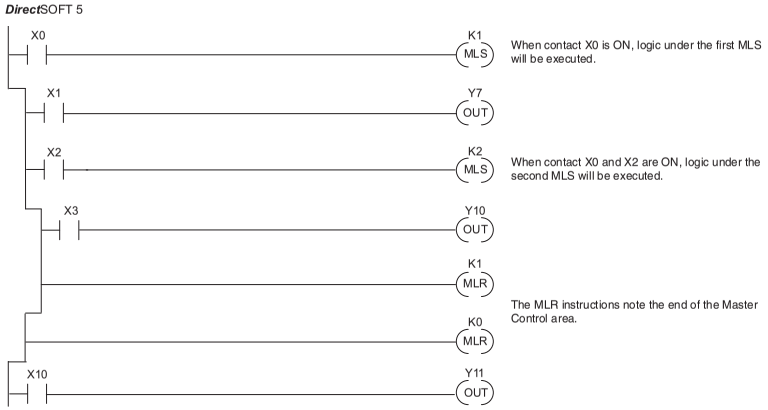

MLS/MLR Example

In the following MLS/MLR example logic between the first MLS K1 (A) and MLR K0 (B) will function only if input X0 is on. The logic between the MLS K2 (C) and MLR K1 (D) will function only if input X10 and X0 is on. The last rung is not controlled by either of the MLS coils.

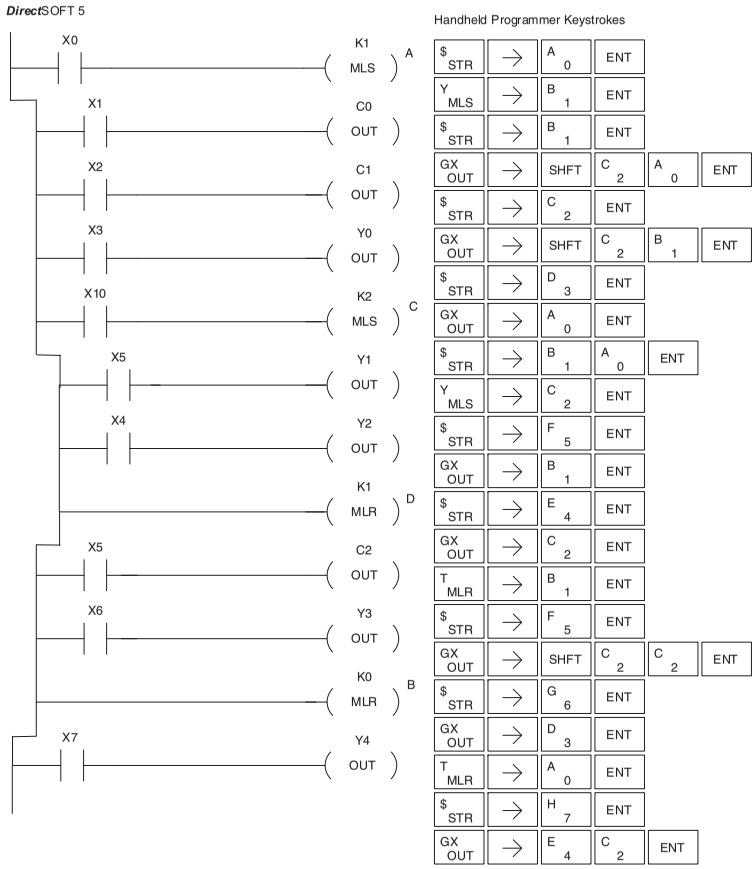

5

Interrupt Instructions

Interrupt (INT)

DS5	Used
HPP	Used

The Interrupt instruction allows a section of ladder logic to be placed below the main body of the program and executed only when needed. High-Speed I/O Modes 10, 20, and 40 can generate an interrupt. With Mode 40, you may select an external interrupt (input X0), or a time-based interrupt (5–999 mS).

```
INT        O aaa
```

```
INT        1
```


Typically, interrupts are used in an application when a fast response to an input is needed or a program section must execute faster than the normal CPU scan. The interrupt label and all associated logic must be placed after the End statement in the program. When an interrupt occurs, the CPU will complete execution of the current instruction it is processing in ladder logic, then execute the interrupt routine. After interrupt routine execution, the ladder program resumes from the point at which it was interrupted.

See Chapter 3, the section on Mode 40 (Interrupt) Operation for more details on interrupt configuration. In the DL05, only one hardware interrupt is available.

Operand Data Type	DL05 Range
Constant ..... O	0, 1

Interrupt Return (IRT)

DS5	Used
HPP	Used

An Interrupt Return is normally executed as the last instruction in the interrupt routine. It returns the CPU to the point in the main program from which it was called. The Interrupt Return is a stand-alone instruction (no input contact on the rung).

—(IRT)

Interrupt Return Conditional (IRTC)

DS5	Used
HPP	Used

The Interrupt Return Conditional instruction is a optional instruction used with an input contact to implement a conditional return from the interrupt routine. The Interrupt Return is required to terminate the interrupt routine.

—(IRTC)

Enable Interrupts (ENI)

DS5	Used
HPP	Used

The Enable Interrupt instruction is placed in the main ladder program (before the End instruction), enabling the interrupt. The interrupt remains enabled until the program executes a Disable Interrupt instruction.

—(ENI)

Disable Interrupts (DISI)

DS5	Used
HPP	Used

A Disable Interrupt instruction in the main body of the application program (before the End instruction) will disable the interrupt (either external or timed). The interrupt remains disabled until the program executes an Enable Interrupt instruction.

—(DISI)

External Interrupt Program Example

In the following example, we do some initialization on the first scan, using the first-scan contact SP0. The interrupt feature is the HSIO Mode 40. Then we configure X0 as the external interrupt by writing to its configuration register, V7634. See Chapter 3, Mode 40 Operation for more details.

During program execution, when X2 is on the interrupt is enabled. When X2 is off the interrupt will be disabled. When an interrupt signal (X0) occurs the CPU will jump to the interrupt label INT O 0. The application ladder logic in the interrupt routine will be performed. The CPU will return to the main body of the program after the IRT instruction is executed.

*Direct*SOFT

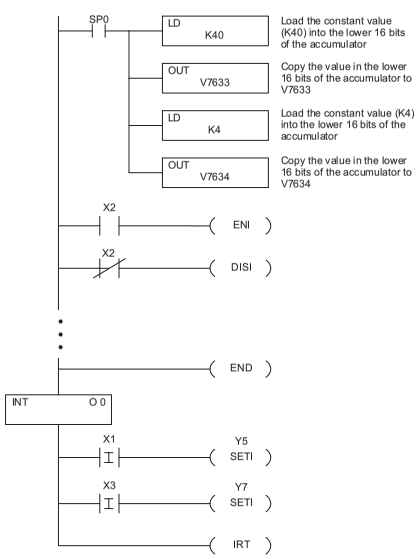

Handheld Programmer Keystrokes

$ STR	→	SHFT	SP STRN	A 0	ENT			
SHFT	L ANDST	D 3	→	SHFT	K JMP	E 4	A 0	ENT
GX OUT	→	SHFT	V AND	H 7	G 6	D 3	D 3	ENT
SHFT	L ANDST	D 3	→	SHFT	K JMP	E 4	ENT	
GX OUT	→	SHFT	V AND	H 7	G 6	D 3	E 4	ENT
$ STR	→	C 2	ENT					
SHFT	E 4	N TMR	I 8	ENT				
SP STRN	→	C 2	ENT					
SHFT	D 3	I 8	S RST	I 8	ENT			
• • •								
SHFT	E 4	N TMR	D 3	ENT				
SHFT	I 8	N TMR	T MLR	→	A 0	ENT		
$ STR	SHFT	I 8	→	B 1	ENT			
X SET	SHFT	I 8	→	F 5	ENT			
$ STR	SHFT	I 8	→	D 3	ENT			
X SET	SHFT	I 8	→	H 7	ENT			
SHFT	I 8	R ORN	T MLR	ENT				

Timed Interrupt Program Example

In the following example, we do some initialization on the first scan, using the first-scan contact SP0. The interrupt feature is the HSIO Mode 40. Then we configure the HSIO timer as a 10 mS interrupt by writing K104 to the configuration register for X0 (V7634). See Chapter 3, Mode 40 Operation for more details.

When X4 turns on, the interrupt will be enabled. When X4 turns off, the interrupt will be disabled. Every 10 mS the CPU will jump to the interrupt label INT O 0. The application ladder logic in the interrupt routine will be performed. If X3 is not on Y0–Y7 will be reset to off and then the CPU will return to the main body of the program.

*Direct*SOFT 5

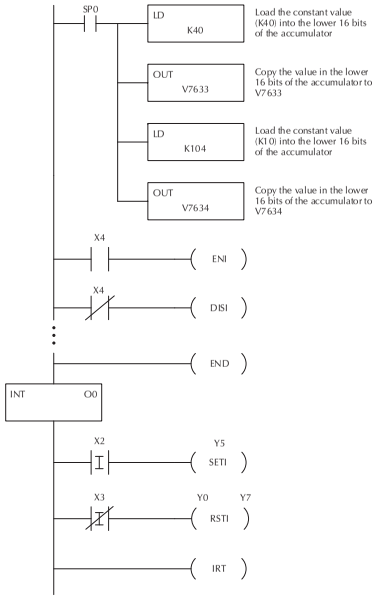

Handheld Programmer Keystrokes

$ STR	→	B 1	ENT							
SHFT	L ANDST	D 3	→	SHFT	K JMP	E 4	A 0	ENT		
GX OUT	→	SHFT	V AND	H 7	G 6	D 3	D 3	ENT		
SHFT	L ANDST	D 3	→	SHFT	K JMP	B 1	A 0	E 4	ENT	
GX OUT	→	SHFT	V AND	H 7	G 6	D 3	E 4	ENT		
$ STR	→	E 4	ENT							
SHFT	E 4	N TMR	I 8	ENT						
SP STRN	→	E 4	ENT							
SHFT	D 3	I 8	S RST	I 8	ENT					

SHFT	E 4	N TMR	D 3	ENT			
SHFT	I 8	N TMR	T MLR	→	A 0	ENT	
$ STR	SHFT	I 8	→	C 2	ENT		
X SET	SHFT	I 8	→	F 5	ENT		
SP STRN	SHFT	I 8	→	D 3	ENT		
X SET	SHFT	I 8	→	A 0	→	H 7	ENT
SHFT	I 8	R ORN	T MLR	ENT			

Independent Timed Interrupt

Interrupt O1 is also available as an interrupt. This interrupt is independent of the HSIO features. Interrupt O1 uses an internal timer that is configured in V-memory location V7647. The interrupt period can be adjusted from 5 to 9999 mS. Once the interrupt period is set and the interrupt is enabled in the program, the CPU will continuously call the interrupt routine based on the time setting in V7647.

Input	Configuration Register	Function	Hex Code Required
–	V7647	High-Speed Timed Interrupt	xxxx (xxxx = timer setting) 5 - 9999 mS (BCD)

Message Instructions

Fault (FAULT)

DS5	Used
HPP	Used

The Fault instruction is used to display a message on the handheld programmer or in the *Direct*SOFT 5 status bar. The message has a maximum of 23 characters and can be either V-memory data, numerical constant data or ASCII text.

FAULT
A aaa

To display the value in a V-memory location, specify the V-memory location in the instruction. To display the data in ACON (ASCII constant) or NCON (Numerical constant) instructions, specify the constant (K) value for the corresponding data label area.

Operand Data Type	DL05 Range
A	aaa
V-memory V	See memory map
Constant K	1-FFFF

Discrete Bit Flags	Description
SP50	On when the FAULT instruction is executed

Fault Example

DS5	Used
HPP	Used

In the following example when X1 is on, the message SW 146 will display on the handheld programmer. The NCONs use the HEX ASCII equivalent of the text to be displayed. (The HEX ASCII for a blank is 20, a 1 is 31, 4 is 34 ...)

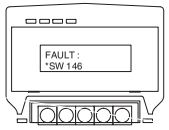

*Direct*SOFT 5

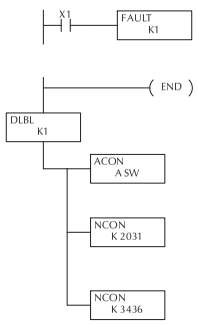

Handheld Programmer Keystrokes

$ STR	→	B 1	ENT					
SHFT	F 5	A 0	U ISG	L ANDST	T MLR	→	B 1	ENT

SHFT	E 4	N TMR	D 3	ENT					
SHFT	D 3	L ANDST	B 1	L ANDST	→	B 1	ENT		
SHFT	A 0	C 2	O INST#	N TMR	→	S RST	W ANDN	ENT	
SHFT	N TMR	C 2	O INST#	N TMR	→	C 2	A 0	D 3	B 1	ENT
SHFT	N TMR	C 2	O INST#	N TMR	→	D 3	E 4	D 3	G 6	ENT

Data Label (DLBL)

DS5	Used
HPP	Used

The Data Label instruction marks the beginning of an ASCII/numeric data area. DLBLs are programmed after the End statement. A maximum of 64 DLBL instructions can be used in a program. Multiple NCONs and ACONs can be used in a DLBL area.

```
DLBL      K aaa
```

Operand Data Type	DL05 Range
.....A	aaa
Constant .....K	1-FFFF

5

ASCII Constant (ACON)

DS5	Used
HPP	Used

The ASCII Constant instruction is used with the DLBL instruction to store ASCII text for use with other instructions. Two ASCII characters can be stored in an ACON instruction. If only one character is stored in an ACON a leading space will be inserted.

```
ACON
      A aaa
```

Operand Data Type	DL05 Range
	aaa
Constant .....A	0-9 A-Z

Numerical Constant (NCON)

DS5	Used
HPP	Used

The Numerical Constant instruction is used with the DLBL instruction to store the HEX ASCII equivalent of numerical data for use with other instructions. Two digits can be stored in an NCON instruction.

```
NCON
      K aaa
```

Operand Data Type	DL05 Range
	aaa
Constant .....K	0-FFFF

Data Label Example

In the following example, an ACON and two NCON instructions are used within a DLBL instruction to build a text message. See the FAULT instruction for information on displaying messages. The DV-1000 Manual also has information on displaying messages.

*Direct*SOFT 5

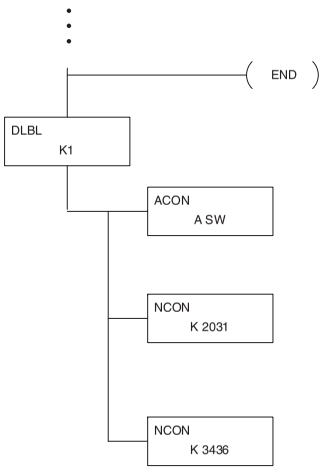

Handheld Programmer Keystrokes

SHFT	E 4	N TMR	D 3	ENT						
SHFT	D 3	L ANDST	B 1	L ANDST	→	B 1	ENT			
SHFT	A 0	C 2	O INST#	N TMR	→	S RST	W ANDN	ENT		
SHFT	N TMR	C 2	O INST#	N TMR	→	C 2	A 0	D 3	B 1	ENT
SHFT	N TMR	C 2	O INST#	N TMR	→	D 3	E 4	D 3	G 6	ENT

5

Print Message (PRINT)

DS5	Used
HPP	N/A

The Print Message instruction prints the embedded text or text/data variable message to the specified, configured, communications port (Port 2 on the DL05 CPU).

```
PRINT      A aaa
"Hello, this is a PLC message"
```

Operand Data Type	DL05 Range
..... A	aaa
Constant ..... K	2

You may recall from the CPU specifications in Chapter 4 that the DL05's ports are capable of several protocols. Port 1 cannot be configured for the non-sequence protocol. To configure port 2 using the Handheld Programmer, use AUX 56 and follow the prompts, making the same choices as indicated below on this page. To configure a port in *Direct*SOFT 5, choose the PLC > Setup > Setup Secondary Comm Port.

- **Port**: From the port number list box at the top, choose "Port 2".
- **Protocol**: Click the check box to the left of "Non-sequence", and then you'll see the dialog box shown below.

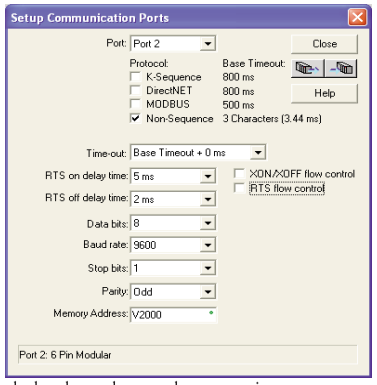

- **Baud Rate**: Choose the baud rate that matches your printer.
- **Stop Bits, Parity**: Choose number of stop bits and parity setting to match your printer.
- **Memory Address**: Choose a V-memory address to be used by *Direct*SOFT 5 to store the port setup information. You will need to reserve 9 words in V-memory for this purpose.

NOTE: See Chapter 4 for a detail of the non-sequence setup.

Then click the button indicated to send the Port 2 configuration to the CPU, and click Close. Then see Chapter 3 for port wiring information, in order to connect your printer to the DL05.

Port 2 on the DL05 has standard RS232 levels, and should work with most printer serial input connections.

Text element – this is used for printing character strings. The character strings are defined as the character (more than 0) ranged by the double quotation marks. Two hex numbers preceded by the dollar sign means an 8-bit ASCII character code. Also, two characters preceded by the dollar sign is interpreted according to the following table:

#	Character code	Description
1	$$	Dollar sign ($)
2	$"	Double quotation (")
3	$L or $l	Line feed (LF)
4	$N or $n	Carriage return line feed (CRLF)
5	$P or $p	Form feed
6	$R or $r	Carriage return (CR)
7	$T or $t	Tab

The following examples show various syntax conventions and the length of the output to the printer.

Example:

" "	Length 0 without character
"A"	Length 1 with character A
" "	Length 1 with blank
" $" "	Length 1 with double quotation mark
" $ R $ L "	Length 2 with one CR and one LF
" $ 0 D $ 0 A "	Length 2 with one CR and one LF
" $ $ "	Length 1 with one $ mark

In printing an ordinary line of text, you will need to include **double quotation** marks before and after the text string. Error code 499 will occur in the CPU when the print instruction contains invalid text or no quotations. It is important to test your PRINT instruction data during the application development.

The following example prints the message to port 2. We use a PD contact, which causes the message instruction to be active for just one scan. Note the $N at the end of the message, which produces a carriage return / line feed on the printer. This prepares the printer to print the next line, starting from the left margin.

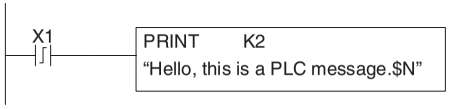

Print the message to Port 2 when X1 makes an off-to-on transition.

V-memory element - this is used for printing V-memory contents in the integer format or real format. Use V-memory number or V-memory number with "-" and data type. The data types are shown in the table below. The Character code must be capital letters.

NOTE: There must be a space entered before and after the V-memory address to separate it from the text string. Failure to do this will result in an error code 499.

#	Character code	Description
1	none	16-bit binary (decimal number)
2	: B	4 digit BCD
3	: D	32-bit binary (decimal number)
4	: D B	8 digit BCD

Example:

V2000 Print binary data in V2000 for decimal number

V2000 : B Print BCD data in V2000

V2000 : D Print binary number in V2000 and V2001 for decimal number

V2000 : D B Print BCD data in V2000 and V2001

Example: The following example prints a message containing text and a variable. The "reactor temperature" labels the data, which is at V2000. You can use the : B qualifier after the V2000 if the data is in BCD format, for example. The final string adds the units of degrees to the line of text, and the $N adds a carriage return / line feed.

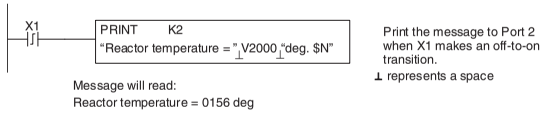

V-memory text element ¨This is used for printing text stored in V-memory. Use the % followed by the number of characters after V-memory number for representing the text. If you assign "0" as the number of characters, the print function will read the character count from the first location. Then it will start at the next V-memory location and read that number of ASCII codes for the text from memory.

Example:

V2000 % 16 16 characters in V2000 to V2007 are printed.

V2000 % 0 The characters in V2001 to Vxxxx (determined by the number in V2000) will be printed.

Bit element – this is used for printing the state of the designated bit in V-memory or a relay bit. The bit element can be assigned by the designating point (.) and bit number preceded by the V-memory number or relay number. The output type is described as shown in the table below.

#	Data format	Description
1	none	Print 1 for an ON state, and 0 for an OFF state
2	: BOOL	Print "TRUE" for an ON state, and "FALSE" for an OFF state
3	: ONOFF	Print "ON" for an ON state, and "OFF" for an OFF state

Example:

V2000 . 15 **Prints the status of bit 15 in V2000, in 1/0 format**

C100 **Prints the status of C100 in 1/0 format**

C100 : BOOL **Prints the status of C100 in TRUE/FALSE format**

C100 : ON/OFF **Prints the status of C00 in ON/OFF format**

V2000.15 : BOOL **Prints the status of bit 15 in V2000 in TRUE/FALSE format**

The maximum numbers of characters you can print is 128. The number of characters for each element is listed in the table below:

Element Type	Maximum Characters
Text, 1 character	1
16 bit binary	6
32 bit binary	11
4 digit BCD	4
8 digit BCD	8
Floating point (real number)	12
Floating point (real with exponent)	12
V-memory/text	2
Bit (1/0 format)	1
Bit (TRUE/FALSE format)	5
Bit (ON/OFF format)	3

The handheld programmer's mnemonic is "PRINT," followed by the DEF field.

Special relay flags SP116 and SP117 indicate the status of the DL05 CPU ports (busy, or communications error). See the appendix on special relays for a description.

NOTE: You must use the appropriate special relay in conjunction with the PRINT command to ensure the ladder program does not try to PRINT to a port that is still busy from a previous PRINT or WX or RX instruction.

Intelligent I/O Instructions

Read from Intelligent Module (RD)

DS32	Used
HPP	Used

The Read from Intelligent Module instruction reads a block of data (1-128 bytes maximum) from an intelligent I/O module into the CPU's V-memory. It loads the function parameters into the first and second level of the accumulator stack and the accumulator by three additional instructions.

RD
V aaa

Listed below are the steps to program the Read from Intelligent module function.

Step 1: — Load the base number (0-3) into the first byte and the slot number (0-7) into the second byte of the second level of the accumulator stack.

Step 2: — Load the number of bytes to be transferred into the first level of the accumulator stack (maximum of 128 bytes).

Step 3: — Load the address from which the data will be read into the accumulator. This parameter must be a HEX value.

Step 4: — Insert the RD instruction which specifies the starting V-memory location (Vaaa) where the data will be read into.

Helpful Hint: — Use the LDA instruction to convert an octal address to its HEX equivalent and load it into the accumulator when the HEX format is required.

Operand Data Type	DL06 Range
	aaa
V-memory V	See memory map

Discrete Bit Flags	Description
SP54	On when RX, WX RD, WT instructions are executed with the wrong parameters.

NOTE: Status flags are valid only until another instruction uses the same flag.

In the following example when X1 is ON, the RD instruction will read six bytes of data from a intelligent module in base 1, slot 2 starting at address 0 in the intelligent module and copy the information into V-memory loacations V1400-V1402.

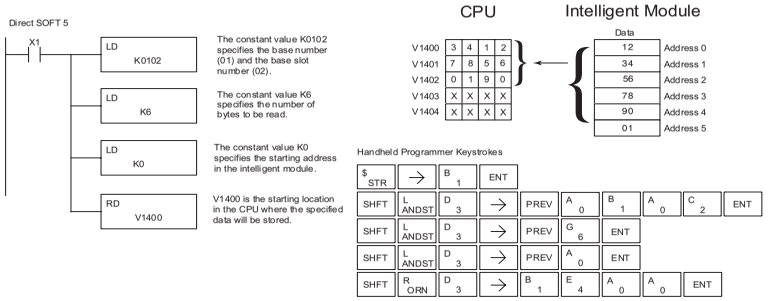

Write to Intelligent Module (WT)

DS32	Used
HPP	Used

The Write to Intelligent Module instruction writes a block of data (1-128 bytes maximum) to an intelligent I/O module from a block of V-memory in the CPU. The function parameters are loaded into the first and second level of the accumulator stack and the accumulator by three additional instructions.

WT
V aaa

Listed below are the steps to program the Read from Intelligent module function.

Step 1: — Load the base number (0-3) into the first byte and the slot number (0-7) into the second byte of the second level of the accumulator stack.

Step 2: — Load the number of bytes to be transferred into the first level of the accumulator stack (maximum of 128 bytes).

Step 3: — Load the intelligent module address which will receive the data into the accumulator. This parameter must be a HEX value.

Step 4: — Insert the WT instruction which specifies the starting V-memory location (Vaaa) where the data will be written from in the CPU.

Helpful Hint: — Use the LDA instruction to convert an octal address to its HEX equivalent and load it into the accumulator when the HEX format is required.

Operand Data Type	DL06 Range
	aaa
V-memory V	See memory map

Discrete Bit Flags	Description
SP54	On when RX, WX RD, WT instructions are executed with the wrong parameters.

NOTE: Status flags are valid only until another instruction uses the same flag.

In the following example, when X1 is on, the WT instruction will write six bytes of data to an intelligent module in base 1, slot 2 starting at address 0 in the intelligent module and copy the data from V-memory locations V1400-V1402.

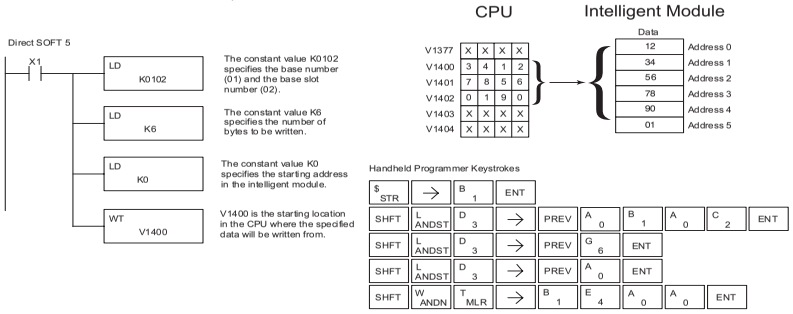

Network Instructions

Read from Network (RX)

DS5	Used
HPP	Used

The Read from Network instruction causes the master device on a network to read a block of data from a slave device on the same network. The function parameters are loaded into the accumulator and the first and second level of the stack. Listed below are the program steps necessary to execute the Read from Network function.

RX
A aaa

5

Step 1: — Load the slave address (0–90 BCD) into the low byte and "F2" into the high byte of the accumulator (the next two instructions push this word down to the second layer of the stack).

Step 2: — Load the number of bytes to be transferred into the accumulator, 2 - 128 bytes are allowed, (the next instruction pushes this word onto the top of the stack).

Step 3: — Load the starting Master CPU address into the accumulator. This is the memory location where the data read from the slave will be put. This parameter requires a HEX value.

Step 4: — Insert the RX instruction which specifies the starting V-memory location (Aaaa) where the data will be read from in the slave.

Helpful Hint: For parameters that require HEX values, the LDA instruction can be used to convert an octal address to the HEX equivalent and load the value into the accumulator.

Operand Data Type	DL05 Range
A	aaa
V-memory V	All (See page 3–28)
Pointer ..... P	All V-memory. (See page 3–28)
Inputs X	0–377
Outputs ..... Y	0–377
Control Relays C	0–777
Stage ..... S	0–377
Timer ..... T	0–177
Counter ..... CT	0–177
Special Relay ..... SP	0–777
Program Memory ..... $	0–2047 (2K program mem.)

In the following example, when X1 is on and the port busy relay SP116 (see special relays) is not on, the RX instruction will access port 2 operating as a master. Ten consecutive bytes of data (V2000 – V2004) will be read from a CPU at station address 5 and copied into V-memory locations V2300–V2304 in the CPU with the master port.

*Direct*SOFT 5

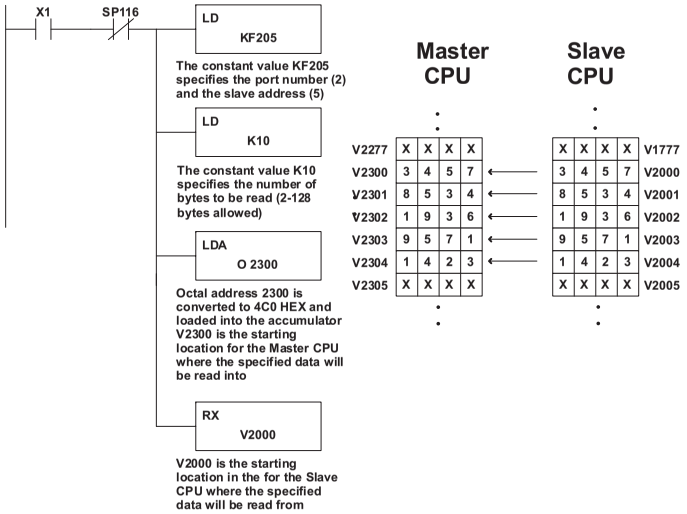

5

HandheldProgrammer Keystrokes

$ STR	→	B 1	ENT									
W ANDN	→	SHFT	SP STRN	B 1	B 1	G 6	ENT					
SHFT	L ANDST	D 3	→	SHFT	K JMP	SHFT	F 5	SHFT	C 2	A 0	F 5	ENT
SHFT	L ANDST	D 3	→	SHFT	K JMP	B 1	A 0	ENT				
SHFT	L ANDST	D 3	A 0	→	C 2	D 3	A 0	A 0	ENT			
SHFT	R ORN	X SET	→	C 2	A 0	A 0	A 0	ENT				

Write to Network (WX)

DS5	Used
HPP	Used

The Write to Network instruction is used to write a block of data from the master device to a slave device on the same network. The function parameters are loaded into the accumulator and the first and second level of the stack. Listed below are the program steps necessary to execute the Write to Network function.

```
WX
   A aaa
```

Step 1: — Load the slave address (0–90 BCD) into the low byte and "F2" into the high byte of the accumulator (the next two instructions push this word down to the second layer of the stack).

Step 2: — Load the number of bytes to be transferred into the accumulator, 2-128 bytes are allowed, (the next instruction pushes this word onto the top of the stack).

Step 3: — Load the starting Master CPU address into the accumulator. This is the memory location where the data will be written from. This parameter requires a HEX value.

Step 4: — Insert the WX instruction which specifies the starting V-memory location (Aaaa) where the data will be written to in the slave.

Helpful Hint: For parameters that require HEX values, the LDA instruction can be used to convert an octal address to the HEX equivalent and load the value into the accumulator.

Operand Data Type	DL05 Range
..... A	aaa
V-memory V	All (See page 3–28)
Pointer ..... P	All V-memory (See page 3–28)
Inputs X	0–377
Outputs ..... Y	0–377
Control Relays C	0–777
Stage ..... S	0–377
Timer ..... T	0–177
Counter ..... CT	0–177
Special Relay ..... SP	0–777
Program Memory ..... $	0–2048 (2K program mem.)

In the following example when X1 is on and the module busy relay SP116 (see special relays) is not on, the WX instruction will access port 2 operating as a master. Ten consecutive bytes of data is read from the Master CPU and copied to V-memory locations V2000–V2004 in the slave CPU at station address 5.

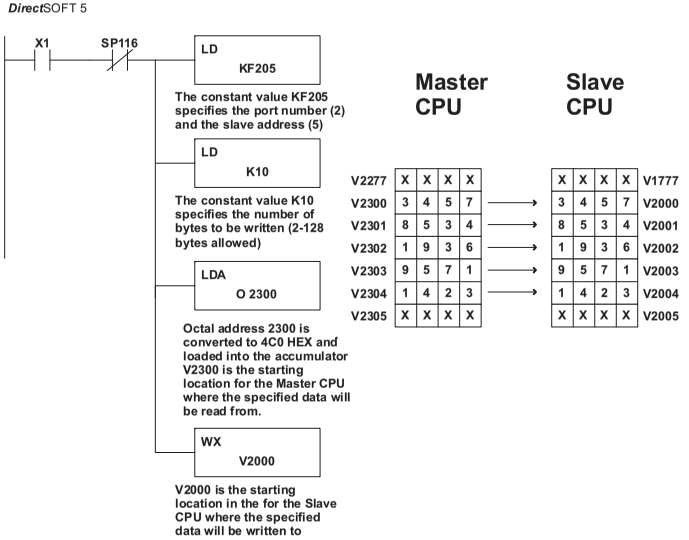

HandheldProgrammer Keystrokes

$ STR	→	B 1	ENT									
W ANDN	→	SHFT	SP STRN	B 1	C 1	E 6	ENT					
SHFT	L ANDST	D 3	→	SHFT	K JMP	SHFT	F 5	SHFT	C 2	A 0	F 5	ENT
SHFT	L ANDST	D 3	→	SHFT	K JMP	B 1	A 0	ENT				
SHFT	L ANDST	D 3	A 0	→	C 2	D 3	A 0	A 0	ENT			
SHFT	W ANDN	X SET	→	C 2	A 0	A 0	A 0	ENT				

Intelligent Box (IBox) Instructions

The Intelligent Box Instructions (commonly refered to as IBox Instructions) listed in this section are additional, and much different looking, instructions made available with the release of **Direct**SOFT 5. The DL05 PLC requires firmware version v5.10 or later to use the new ***Direct***SOFT 5 features. For more information on ***Direct***SOFT 5, please visit our website at: www.automationdirect.com.

Analog Helper IBoxes		
Instruction	**Ibox #**	**Page**
Analog Input / Output Combo Module Pointer Setup (ANLGCMB)	IB-462	5-126
Analog Input Module Pointer Setup (ANLGIN)	IB-460	5-128
Analog Output Module Pointer Setup (ANLGOUT)	IB-461	5-130
Analog Scale 12 Bit BCD to BCD (ANSCL)	IB-423	5-132
Analog Scale 12 Bit Binary to Binary (ANSCLB)	IB-403	5-134
Filter Over Time - BCD (FILTER)	IB-422	5-136
Filter Over Time - Binary (FILTERB)	IB-402	5-138
Hi/Low Alarm - BCD (HILOAL)	IB-421	5-140
Hi/Low Alarm - Binary (HILOALB)	IB-401	5-142

Discrete Helper IBoxes		
Instruction	**Ibox #**	**Page**
Off Delay Timer (OFFDTMR)	IB-302	5-144
On Delay Timer (ONDTMR)	IB-301	5-146
One Shot (ONESHOT)	IB-303	5-148
Push On / Push Off Circuit (PONOFF)	IB-300	5-149

Memory IBoxes		
Instruction	**Ibox #**	**Page**
Move Single Word (MOVEW)	IB-200	5-150
Move Double Word (MOVED)	IB-201	5-151

Math IBoxes		
Instruction	**Ibox #**	**Page**
Math - BCD (MATHBCD)	IB-521	5-152
Math - Binary (MATHBIN)	IB-501	5-154
Square BCD (SQUARE)	IB-523	5-156
Square Binary (SQUAREB)	IB-503	5-157
Sum BCD Numbers (SUMBCD)	IB-522	5-158
Sum Binary Numbers (SUMBIN)	IB-502	5-159

Communication IBoxes		
Instruction	**Ibox #**	**Page**
ECOM100 Configuration (ECOM100)	IB-710	5-160
ECOM100 Disable DHCP (ECDHCPD)	IB-736	5-162
ECOM100 Enable DHCP (ECDHCPE)	IB-735	5-164
ECOM100 Query DHCP Setting (ECDHCPQ)	IB-734	5-166
ECOM100 Send E-mail (ECEMAIL)	IB-711	5-168
ECOM100 Restore Default E-mail Setup (ECEMRDS)	IB-713	5-171
ECOM100 E-mail Setup (ECEMSUP)	IB-712	5-174
ECOM100 IP Setup (ECIPSUP)	IB-717	5-178
ECOM100 Read Description (ECRDDES)	IB-726	5-180
ECOM100 Read Gateway Address (ECRDGWA)	IB-730	5-182
ECOM100 Read IP Address (ECRDIP)	IB-722	5-184
ECOM100 Read Module ID (ECRDMID)	IB-720	5-186
ECOM100 Read Module Name (ECRDNAM)	IB-724	5-188
ECOM100 Read Subnet Mask (ECRDSNM)	IB-732	5-190
ECOM100 Write Description (ECWRDES)	IB-727	5-192
ECOM100 Write Gateway Address (ECWRGWA)	IB-731	5-194
ECOM100 Write IP Address (ECWRIP)	IB-723	5-196
ECOM100 Write Module ID (ECWRMID)	IB-721	5-198
ECOM100 Write Name (ECWRNAM)	IB-725	5-200
ECOM100 Write Subnet Mask (ECWRSNM)	IB-733	5-202
ECOM100 RX Network Read (ECRX)	IB-740	5-204
ECOM100 WX Network Write(ECWX)	IB-741	5-207
NETCFG Network Configuration (NETCFG)	IB-700	5-210
Network RX Read (NETRX)	IB-701	5-212
Network WX Write (NETWX)	IB-702	5-215

Counter I/O IBoxes		
Instruction	**Ibox #**	**Page**
CTRIO Configuration (CTRIO)	IB-1000	5-218
CTRIO Add Entry to End of Preset Table (CTRADPT)	IB-1005	5-220
CTRIO Clear Preset Table (CTRCLRT)	IB-1007	5-223
CTRIO Edit Preset Table Entry (CTREDPT)	IB-1003	5-226
CTRIO Edit Preset Table Entry and Reload (CTREDRL)	IB-1002	5-230
CTRIO Initialize Preset Table (CTRINPT)	IB-1004	5-234
CTRIO Initialize Preset Table (CTRINTR)	IB-1010	5-238
CTRIO Load Profile (CTRLDPR)	IB-1001	5-242
CTRIO Read Error (CTRRDER)	IB-1014	5-244
CTRIO Run to Limit Mode (CTRRTLM)	IB-1011	5-246
CTRIO Run to Position Mode (CTRRTPM)	IB-1012	5-249
CTRIO Velocity Mode (CTRVELO)	IB-1013	5-251
CTRIO Write File to ROM (CTRWFTR)	IB-1006	5-254

Analog Input/Output Combo Module Pointer Setup (ANLGCMB) (IB-462)

DS5	Used
HPP	N/A

The Analog Input/Output Combo Module Pointer Setup instruction generates the logic to configure the pointer method for an analog input/output combination module on the first PLC scan following a Program to Run transition.

The ANLGCMB IBox instruction determines the data format and Pointer addresses based on the CPU type, the Base# and the module Slot#.

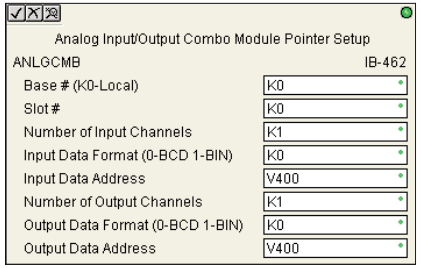

The Input Data Address is the starting location in user V-memory where the analog input data values will be stored, one location for each input channel enabled.

The Output Data Address is the starting location in user V-memory where the analog output data values will be placed by ladder code or external device, one location for each output channel enabled.

Since the IBox logic only executes on the first scan, the instruction cannot have any input logic.

ANLGCMB Parameters

- Base # (K0-Local): must be 0 for DL05 PLC
- Slot #: specifies the single PLC option slot that is occupied by the module
- Number of Input Channels: specifies the number of analog input channels to scan
- Input Data Format (0-BCD 1-BIN): specifies the analog input data format (BCD or Binary) - the binary format may be used for displaying data on some OI panels
- Input Data Address: specifies the starting V-memory location that will be used to store the analog input data
- Number of Output Channels: specifies the number of analog output channels that will be used
- Output Data Format (0-BCD 1-BIN): specifies the format of the analog output data (BCD or Binary)
- Output Data Address: specifies the starting V-memory location that will be used to source the analog output data

Parameter	DL05 Range
Base # (K0-Local) . . . . . K	K0 (local base only)
Slot # . . . . . K	K1
Number of Input Channels . . . . . K	K1-8
Input Data Format (0-BCD 1-BIN) . . . . . K	BCD: K0; Binary: K1
Input Data Address V	See DL05 V-memory map - Data Words
Number of Output Channels . . . . . K	K1-8
Output Data Format (0-BCD 1-BIN) . . . . . K	BCD: K0; Binary: K1
Output Data Address V	See DL05 V-memory map - Data Words

ANLGCMB Example

In the following example, the ANLGCMB instruction is used to setup the pointer method for an analog I/O combination module that is installed in option slot 2. Four input channels are enabled and the analog data will be written to V2000 - V2003 in BCD format. Two output channels are enabled and the analog values will be read from V2100 - V2101 in BCD format.

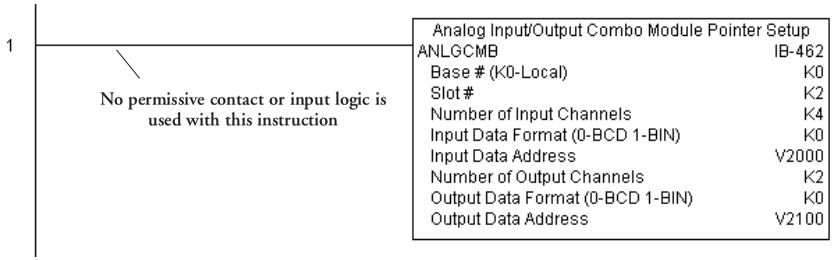

Analog Input Module Pointer Setup (ANLGIN) (IB-460)

DS5	Used
HPP	N/A

Analog Input Module Pointer Setup generates the logic to configure the pointer method for one analog input module on the first PLC scan following a Program to Run transition.

This IBox determines the data format and Pointer addresses based on the CPU type, the Base#, and the Slot#.

The Input Data Address is the starting location in user V-memory where the analog input data values will be stored, one location for each input channel enabled.

Since this logic only executes on the first scan, this IBox cannot have any input logic.

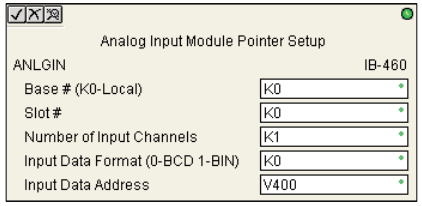

5

ANLGIN Parameters

- Base # (K0-Local): must be 0 for DL05 PLC
- Slot #: specifies the single PLC option slot that is occupied by the module
- Number of Input Channels: specifies the number of input channels to scan
- Input Data Format (0-BCD 1-BIN): specifies the analog input data format (BCD or Binary) - the binary format may be used for displaying data on some OI panels
- Input Data Address: specifies the starting V-memory location that will be used to store the analog input data

Parameter	DL05 Range
Base # (K0-Local) . . . . . K	K0 (local base only)
Slot # . . . . . K	K1
Number of Input Channels . . . . . K	K1-8
Input Data Format (0-BCD 1-BIN) . . . . . K	BCD: K0; Binary: K1
Input Data Address V	See DL05 V-memory map - Data Words

ANLGIN Example

In the following example, the ANLGIN instruction is used to setup the pointer method for an analog input module that is installed in option slot 1. Eight input channels are enabled and the analog data will be written to V2000 - V2007 in BCD format.

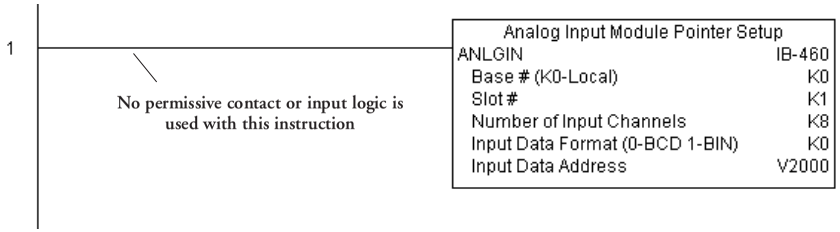

5

Analog Output Module Pointer Setup (ANLGOUT) (IB-461)

DS5	Used
HPP	N/A

Analog Output Module Pointer Setup generates the logic to configure the pointer method for one analog output module on the first PLC scan following a Program to Run transition.

This IBox determines the data format and Pointer addresses based on the CPU type, the Base#, and the Slot#.

The Output Data Address is the starting location in user V-memory where the analog output data values will be placed by ladder code or external device, one location for each output channel enabled.

Since this logic only executes on the first scan, this IBox cannot have any input logic.

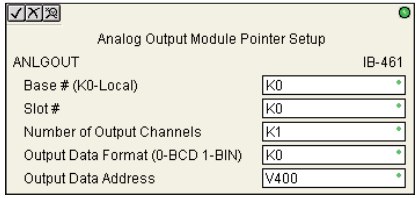

5

ANLGOUT Parameters

- Base # (K0-Local): must be 0 for DL05 PLC
- Slot #: specifies the single PLC option slot that is occupied by the module
- Number of Output Channels: specifies the number of analog output channels that will be used
- Output Data Format (0-BCD 1-BIN): specifies the format of the analog output data (BCD or Binary)
- Output Data Address: specifies the starting V-memory location that will be used to source the analog output data

Parameter	DL05 Range
Base # (K0-Local) . . . . . K	K0 (local base only)
Slot # . . . . . K	K1
Number of Output Channels . . . . . K	K1-8
Output Data Format (0-BCD 1-BIN). . . . . K	BCD: K0; Binary: K1
Output Data Address V	See DL05 V-memory map - Data Words

ANLGOUT Example

In the following example, the ANLGOUT instruction is used to setup the pointer method for an analog output module that is installed in option slot 3. Two output channels are enabled and the analog data will be read from V2100 - V2101 in BCD format.

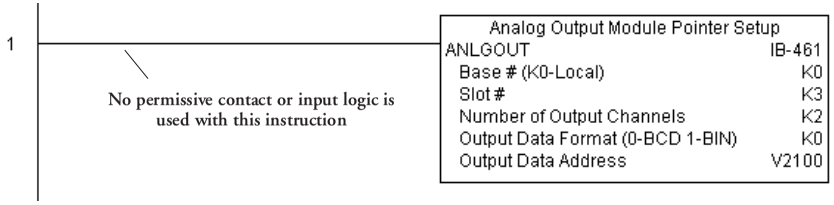

5

Analog Scale 12 Bit BCD to BCD (ANSCL) (IB-423)

DS5	Used
HPP	N/A

Analog Scale 12 Bit BCD to BCD scales a 12 bit BCD analog value (0-4095 BCD) into BCD engineering units. You specify the engineering unit high value (when raw is 4095), and the engineering low value (when raw is 0), and the output V memory address you want the to place the scaled engineering unit value. The engineering units are generated as BCD and can be the full range of 0 to 9999 (see ANSCLB - Analog Scale 12 Bit Binary to Binary if your raw units are in Binary format).

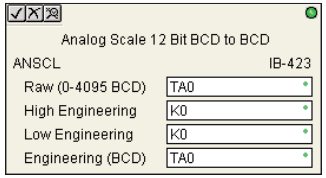

Note that this IBox only works with unipolar unsigned raw values. It does NOT work with bipolar or sign plus magnitude raw values.

5

ANSCL Parameters

- Raw (0-4095 BCD): specifies the V-memory location of the unipolar unsigned raw 0-4095 unscaled value
- High Engineering: specifies the high engineering value when the raw input is 4095
- Low Engineering: specifies the low engineering value when the raw input is 0
- Engineering (BCD): specifies the V-memory location where the scaled engineering BCD value will be placed

Parameter	DL05 Range
Raw (0-4095 BCD) . . . . . V,P	See DL05 V-memory map - Data Words
High Engineering . . . . . K	K0-9999
Low Engineering . . . . . K	K0-9999
Engineering (BCD). . . . . V,P	See DL05 V-memory map - Data Words

ANSCL Example

In the following example, the ANSCL instruction is used to scale a raw value (0-4095 BCD) that is in V2000. The engineering scaling range is set 0-100 (low engineering value - high engineering value). The scaled value will be placed in V2100 in BCD format.

5

Analog Scale 12 Bit Binary to Binary (ANSCLB) (IB-403)

DS5	Used
HPP	N/A

Analog Scale 12 Bit Binary to Binary scales a 12 bit binary analog value (0-4095 decimal) into binary (decimal) engineering units. You specify the engineering unit high value (when raw is 4095), and the engineering low value (when raw is 0), and the output V-memory address you want to place the scaled engineering unit value. The engineering units are generated as binary and can be the full range of 0 to 65535 (see ANSCL - Analog Scale 12 Bit BCD to BCD if your raw units are in BCD format).

Note that this IBox only works with unipolar unsigned raw values. It does NOT work with bipolar, sign plus magnitude, or signed 2's complement raw values.

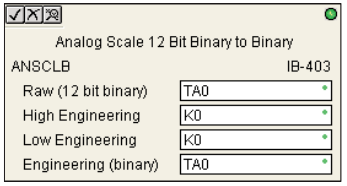

ANSCLB Parameters

- Raw (12 bit binary): specifies the V-memory location of the unipolar unsigned raw decimal unscaled value (12 bit binary = 0-4095 decimal)
- High Engineering: specifies the high engineering value when the raw input is 4095 decimal
- Low Engineering: specifies the low engineering value when the raw input is 0 decimal
- Engineering (binary): specifies the V-memory location where the scaled engineering decimal value will be placed

Parameter	DL05 Range
Raw (12 bit binary) . . . . . V,P	See DL05 V-memory map - Data Words
High Engineering . . . . . K	K0-65535
Low Engineering . . . . . K	K0-65535
Engineering (binary) . . . . . V,P	See DL05 V-memory map - Data Words

ANSCLB Example

In the following example, the ANSCLB instruction is used to scale a raw value (0-4095 binary) that is in V2000. The engineering scaling range is set 0-1000 (low engineering value - high engineering value). The scaled value will be placed in V2100 in binary format.

Filter Over Time - BCD (FILTER) (IB-422)

DS5	Used
HPP	N/A

Filter Over Time BCD will perform a first-order filter on the Raw Data on a defined time interval. The equation is:

New = Old + [(Raw - Old) / FDC] where,

New: New Filtered Value

Old: Old Filtered Value

FDC: Filter Divisor Constant

Raw: Raw Data

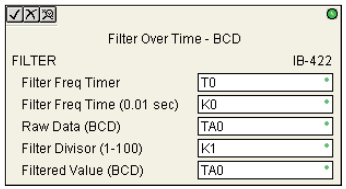

The Filter Divisor Constant is an integer in the range K1 to K100, such that if it equaled K1 then no filtering would be done.

The rate at which the calculation is performed is specified by time in hundredths of a second (0.01 seconds) as the Filter Freq Time parameter. Note that this Timer instruction is embedded in the IBox and must NOT be used anywhere else in your program. Power flow controls whether the calculation is enabled. If it is disabled, the Filter Value is not updated. On the first scan from Program to Run mode, the Filter Value is initialized to 0 to give the calculation a consistent starting point.

FILTER Parameters

- Filter Frequency Timer: specifies the Timer (T) number which is used by the Filter instruction
- Filter Frequency Time (0.01sec): specifies the rate at which the calculation is performed
- Raw Data (BCD): specifies the V-memory location of the raw unfiltered BCD value
- Filter Divisor (1-100): this constant used to control the filtering effect. A larger value will increase the smoothing effect of the filter. A value of 1 results with no filtering.
- Filtered Value (BCD): specifies the V-memory location where the filtered BCD value will be placed

Parameter	DL05 Range
Filter Frequency Timer ..... T	T0-177
Filter Frequency Time (0.01 sec) ..... K	K0-9999
Raw Data (BCD) V	See DL05 V-memory map - Data Words
Filter Divisor (1-100) ..... K	K1-100
Filtered Value (BCD) V	See DL05 V-memory map - Data Words

FILTER Example

In the following example, the Filter instruction is used to filter a BCD value that is in V2000. Timer(T0) is set to 0.5 sec, the rate at which the filter calculation will be performed. The filter constant is set to 2. A larger value will increase the smoothing effect of the filter. A value of 1 results with no filtering. The filtered value will be placed in V2100.

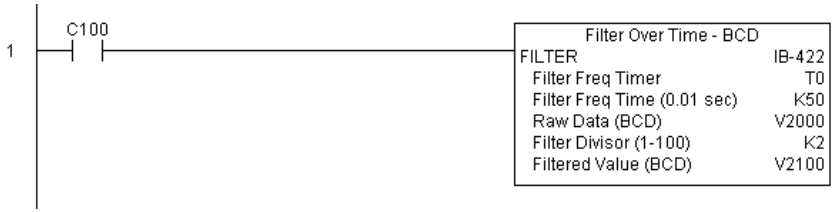

Filter Over Time - Binary (FILTERB) (IB-402)

DS5	Used
HPP	N/A

Filter Over Time in Binary (decimal) will perform a first-order filter on the Raw Data on a defined time interval. The equation is:

New = Old + [(Raw - Old) / FDC] where

New: New Filtered Value

Old: Old Filtered Value

FDC: Filter Divisor Constant

Raw: Raw Data

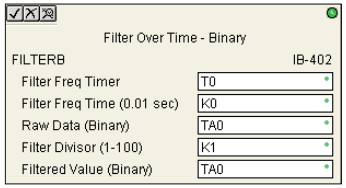

The Filter Divisor Constant is an integer in the range K1 to K100, such that if it equaled K1 then no filtering would be done.

The rate at which the calculation is performed is specified by time in hundredths of a second (0.01 seconds) as the Filter Freq Time parameter. Note that this Timer instruction is embedded in the IBox and must NOT be used anywhere else in your program. Power flow controls whether the calculation is enabled. If it is disabled, the Filter Value is not updated. On the first scan from Program to Run mode, the Filter Value is initialized to 0 to give the calculation a consistent starting point.

FILTERB Parameters

- Filter Frequency Timer: specifies the Timer (T) number which is used by the Filter instruction
- Filter Frequency Time (0.01sec): specifies the rate at which the calculation is performed
- Raw Data (Binary): specifies the V-memory location of the raw unfiltered binary (decimal) value
- Filter Divisor (1-100): this constant used to control the filtering effect. A larger value will increase the smoothing effect of the filter. A value of 1 results with no filtering.
- Filtered Value (Binary): specifies the V-memory location where the filtered binary (decimal) value will be placed

Parameter	DL05 Range
Filter Frequency Timer ..... T	T0-177
Filter Frequency Time (0.01 sec) ..... K	K0-9999
Raw Data (Binary) V	See DL05 V-memory map - Data Words
Filter Divisor (1-100) ..... K	K1-100
Filtered Value (Binary) V	See DL05 V-memory map - Data Words

FILTERB Example

In the following example, the FILTERB instruction is used to filter a binary value that is in V2000. Timer(T1) is set to 0.5 sec, the rate at which the filter calculation will be performed. The filter constant is set to 3. A larger value will increase the smoothing effect of the filter. A value of 1 results with no filtering. The filtered value will be placed in V2100.

Hi/Low Alarm - BCD (HILOAL) (IB-421)

DS5	Used
HPP	N/A

Hi/Low Alarm - BCD monitors a BCD value V-memory location and sets four possible alarm states, High-High, High, Low, and Low-Low whenever the IBox has power flow. You enter the alarm thresholds as constant K BCD values (K0-K9999) and/or BCD value V-memory locations.

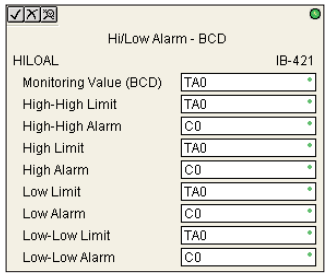

You must ensure that threshold limits are valid, that is HH >= H > L >= LL. Note that when the High-High or Low-Low alarm condition is true, that the High and Low alarms will also be set, respectively. This means you may use the same threshold limit and same alarm bit for the High-High and the High alarms in case you only need one "High" alarm. Also note that the boundary conditions are inclusive. That is, if the Low boundary is K50, and the Low-Low boundary is K10, and if the Monitoring Value equals 10, then the Low Alarm AND the Low-Low alarm will both be ON. If there is no power flow to the IBox, then all alarm bits will be turned off regardless of the value of the Monitoring Value parameter.

HILOAL Parameters

- Monitoring Value (BCD): specifies the V-memory location of the BCD value to be monitored
- High-High Limit: V-memory location or constant specifies the high-high alarm limit
- High-High Alarm: On when the high-high limit is reached
- High Limit: V-memory location or constant specifies the high alarm limit
- High Alarm: On when the high limit is reached
- Low Limit: V-memory location or constant specifies the low alarm limit
- Low Alarm: On when the low limit is reached
- Low-Low Limit: V-memory location or constant specifies the low-low alarm limit
- Low-Low Alarm: On when the low-low limit is reached

Parameter	DL05 Range
Monitoring Value (BCD) V	See DL05 V-memory map - Data Words
High-High Limit . . . . . V, K	K0-9999; or see DL05 V-memory map - Data Words
High-High Alarm . . . . . X, Y, C, GX,GY, B	See DL05 V-memory map
High Limit . . . . . V, K	K0-9999; or see DL05 V-memory map - Data Words
High Alarm . . . . . X, Y, C, GX,GY, B	See DL05 V-memory map
Low Limit . . . . . V, K	K0-9999; or see DL05 V-memory map - Data Words
Low Alarm . . . . . X, Y, C, GX,GY,B	See DL05 V-memory map
Low-Low Limit . . . . . V, K	K0-9999; or see DL05 V-memory map - Data Words
Low-Low Alarm. . . . . X, Y, C, GX,GY, B	See DL05 V-memory map

HILOAL Example

In the following example, the HILOAL instruction is used to monitor a BCD value that is in V2000. If the value in V2000 meets/exceeds the high limit of K900, C101 will turn on. If the value continues to increase to meet/exceed the high-high limit, C100 will turn on. Both bits would be on in this case. The high and high-high limits and alarms can be set to the same value if one “high” limit or alarm is desired to be used.

If the value in V2000 meets or falls below the low limit of K200, C102 will turn on. If the value continues to decrease to meet or fall below the low-low limit of K100, C103 will turn on. Both bits would be on in this case. The low and low-low limits and alarms can be set to the same value if one “low” limit or alarm is desired to be used.

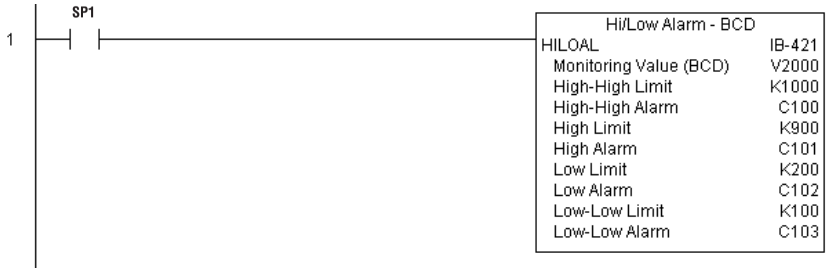

Hi/Low Alarm - Binary (HILOALB) (IB-401)

DS5	Used
HPP	N/A

Hi/Low Alarm - Binary monitors a binary (decimal) V-memory location and sets four possible alarm states, High-High, High, Low, and Low-Low whenever the IBox has power flow. You enter the alarm thresholds as constant K decimal values (K0-K65535) and/or binary (decimal) V-memory locations.

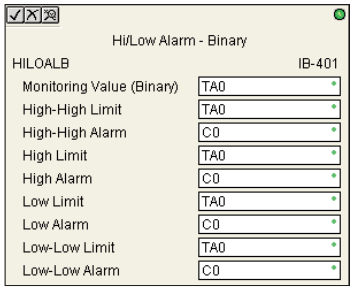

You must ensure that threshold limits are valid, that is HH >= H > L >= LL. Note that when the High-High or Low-Low alarm condition is true, that the High and Low alarms will also be set, respectively. This means you may use the same threshold limit and same alarm bit for the High-High and the High alarms in case you only need one "High" alarm. Also note that the boundary conditions are inclusive. That is, if the Low boundary is K50, and the Low-Low boundary is K10, and if the Monitoring Value equals 10, then the Low Alarm AND the Low-Low alarm will both be ON. If there is no power flow to the IBox, then all alarm bits will be turned off regardless of the value of the Monitoring Value parameter.

HILOALB Parameters

- Monitoring Value (Binary): specifies the V-memory location of the Binary value to be monitored
- High-High Limit: V-memory location or constant specifies the high-high alarm limit
- High-High Alarm: On when the high-high limit is reached
- High Limit: V-memory location or constant specifies the high alarm limit
- High Alarm: On when the high limit is reached
- Low Limit: V-memory location or constant specifies the low alarm limit
- Low Alarm: On when the low limit is reached
- Low-Low Limit: V-memory location or constant specifies the low-low alarm limit
- Low-Low Alarm: On when the low-low limit is reached

Parameter	DL05 Range
Monitoring Value (Binary) V	See DL05 V-memory map - Data Words
High-High Limit ..... V, K	K0-65535; or see DL05 V-memory map - Data Words
High-High Alarm ..... X, Y, C, GX,GY, B	See DL05 V-memory map
High Limit ..... V, K	K0-65535; or see DL05 V-memory map - Data Words
High Alarm..... X, Y, C, GX,GY, B	See DL05 V-memory map
Low Limit ..... V, K	K0-65535; or see DL05 V-memory map - Data Words
Low Alarm ..... X, Y, C, GX,GY,B	See DL05 V-memory map
Low-Low Limit ..... V, K	K0-65535; or see DL05 V-memory map - Data Words
Low-Low Alarm.....X, Y, C, GX,GY, B	See DL05 V-memory map

HILOALB Example

In the following example, the HILOALB instruction is used to monitor a binary value that is in V2000. If the value in V2000 meets/exceeds the high limit of the binary value in V2011, C101 will turn on. If the value continues to increase to meet/exceed the high-high limit value in V2010, C100 will turn on. Both bits would be on in this case. The high and high-high limits and alarms can be set to the same V-memory location/value if one “high” limit or alarm is desired to be used.

If the value in V2000 meets or falls below the low limit of the binary value in V2012, C102 will turn on. If the value continues to decrease to meet or fall below the low-low limit in V2013, C103 will turn on. Both bits would be on in this case. The low and low-low limits and alarms can be set to the same V-memory location/value if one “low” limit or alarm is desired to be used.

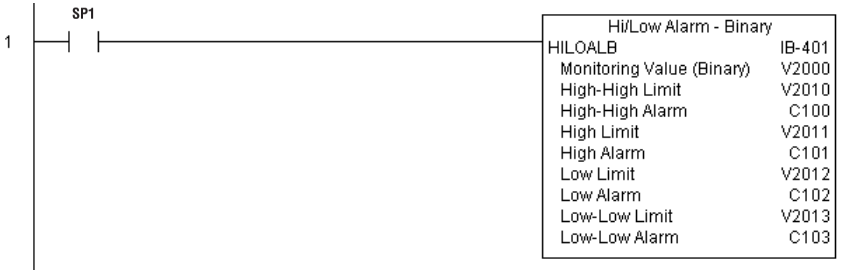

Off Delay Timer (OFFDTMR) (IB-302)

DS5	Used
HPP	N/A

Off Delay Timer will delay the "turning off" of the Output parameter by the specified Off Delay Time (in hundredths of a second) based on the power flow into the IBox. Once the IBox receives power, the Output bit will turn on immediately. When the power flow to the IBox turns off, the Output bit WILL REMAIN ON for the specified amount of time (in hundredths of a second). Once the Off Delay Time has expired, the output will turn Off. If the power flow to the IBox comes back on BEFORE the Off Delay Time, then the timer is RESET and the Output will remain On - so you must continuously have NO power flow to the IBox for AT LEAST the specified Off Delay Time before the Output will turn Off.

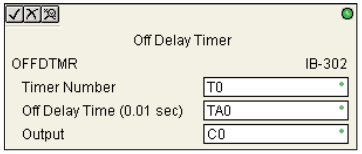

This IBox utilizes a Timer resource (TMRF), which cannot be used anywhere else in your program.

OFFDTMR Parameters

- Timer Number: specifies the Timer(TMRF) number which is used by the OFFDTMR instruction
- Off Delay Time (0.01sec): specifies how long the Output will remain on once power flow to the Ibox is removed
- Output: specifies the output that will be delayed "turning off" by the Off Delay Time.

Parameter	DL05 Range
Timer Number ..... T	T0-177
Off Delay Time ..... K,V	K0-9999; See DL05 V-memory map - Data Words
Output ..... X, Y, C, GX,GY, B	See DL05 V-memory map

OFFDTMR Example

In the following example, the OFFDTMR instruction is used to delay the "turning off"of output C20. Timer 2 (T2) is set to 5 seconds, the "off-delay" period.

When C100 turns on, C20 turns on and will remain on while C100 is on. When C100 turns off, C20 will remain for the specified Off Delay Time (5s), and then turn off.

Example timing diagram

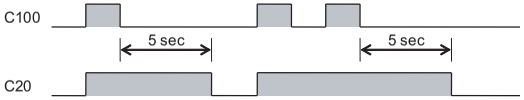

On Delay Timer (ONDTMR) (IB-301)

DS5	Used
HPP	N/A

On Delay Timer will delay the "turning on" of the Output parameter by the specified amount of time (in hundredths of a second) based on the power flow into the IBox. Once the IBox loses power, the Output is turned off immediately. If the power flow turns off BEFORE the On Delay Time, then the timer is RESET and the Output is never turned on, so you must have continuous power flow to the IBox for at least the specified On Delay Time before the Output turns On.

This IBox utilizes a Timer resource (TMRF), which cannot be used anywhere else in your program.

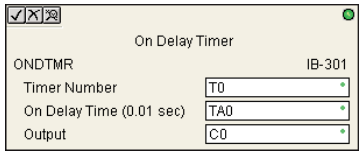

5

ONDTMR Parameters

- Timer Number: specifies the Timer(TMRF) number which is used by the ONDTMR instruction
- On Delay Time (0.01sec): specifies how long the Output will remain on once power flow to the Ibox is removed
- Output: specifies the output that will be delayed "turning on" by the On Delay Time.

Parameter	DL05 Range
Timer Number ..... T	T0-177
On Delay Time ..... K,V	K0-9999; See DL05 V-memory map - Data Words
Output ..... X, Y, C, GX,GY, B	See DL05 V-memory map

ONDTMR Example

In the following example, the ONDTMR instruction is used to delay the "turning on" of output C21. Timer 1 (T1) is set to 2 seconds, the "on-delay" period.

When C101 turns on, C21 is delayed turning on by 2 seconds. When C101 turns off, C21 turns off imediately.

5

Example timing diagram

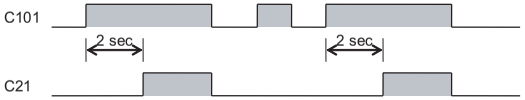

One Shot (ONESHOT) (IB-303)

DS5	Used
HPP	N/A

One Shot will turn on the given bit output parameter for one scan on an OFF to ON transition of the power flow into the IBox. This IBox is simply a different name for the PD Coil (Positive Differential).

ONESHOT Parameters

- Discrete Output: specifies the output that will be on for one scan

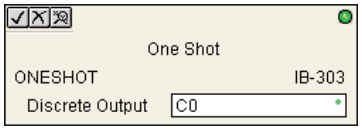

5

Parameter	DL05 Range
Discrete Output . . . . . X, Y, C	See DL05 V-memory map

ONESHOT Example

In the following example, the ONESHOT instruction is used to turn C100 on for one PLC scan after C0 goes from an off to on transition. The input logic must produce an off to on transition to execute the One Shot instruction.

Example timing diagram

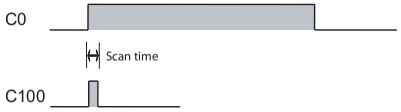

Push On / Push Off Circuit (PONOFF) (IB-300)

DS5	Used
HPP	N/A

Push On/Push Off Circuit toggles an output state whenever its input power flow transitions from off to on. Requires an extra bit parameter for scan-to-scan state information. This extra bit must NOT be used anywhere else in the program. This is also known as a "flip-flop circuit".

PONOFF Parameters

- Discrete Input: specifies the input that will toggle the specified output
- Discrete Output: specifies the output that will be "turned on/off" or toggled
- Internal State: specifies a work bit that is used by the instruction

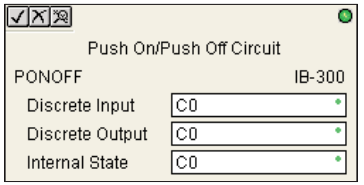

5

Parameter	DL05 Range
Discrete Input . . . . X,Y,C,S,T,CT,GX,GY,SP,B,PB	See DL05 V-memory map
Discrete Output . . . . . X,Y,C,GX,GY,B	See DL05 V-memory map
Internal State . . . . . X, Y, C	See DL05 V-memory map

PONOFF Example

In the following example, the PONOFF instruction is used to control the on and off states of the output C20 with a single input C10. When C10 is pressed once, C20 turns on. When C10 is pressed again, C20 turns off. C100 is an internal bit used by the instruction.

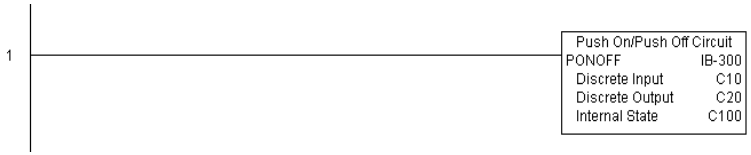

Move Single Word (MOVEW) (IB-200)

DS5	Used
HPP	N/A

Move Single Word moves (copies) a word to a memory location directly or indirectly via a pointer, either as a HEX constant, from a memory location, or indirectly through a pointer.

MOVEW Parameters

- From WORD: specifies the word that will be moved to another location
- To WORD: specifies the location where the "From WORD" will be move to

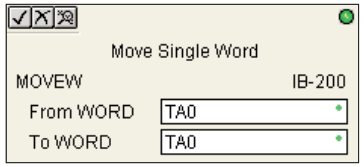

5

Parameter	DL05 Range
From WORD ..... V,P,K	K0-FFFF; See DL05 V-memory map - Data Words
To WORD..... V,P	See DL05 V-memory map - Data Words

MOVEW Example

In the following example, the MOVEW instruction is used to move 16-bits of data from V2000 to V3000 when C100 turns on.

Move Double Word (MOVED) (IB-201)

DS5	Used
HPP	N/A

Move Double Word moves (copies) a double word to two consecutive memory locations directly or indirectly via a pointer, either as a double HEX constant, from a double memory location, or indirectly through a pointer to a double memory location.

MOVED Parameters

- From DWORD: specifies the double word that will be moved to another location
- To DWORD: specifies the location where the "From DWORD" will be move to

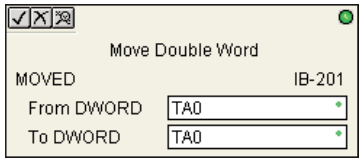

5

Parameter	DL05 Range
From DWORD ..... V,P,K	K0-FFFFFFFF; See DL05 V-memory map - Data Words
To DWORD ..... V,P	See DL05 V-memory map - Data Words

MOVED Example

In the following example, the MOVED instruction is used to move 32-bits of data from V2000 and V2001 to V3000 and V3001 when C100 turns on.

Math - BCD (MATHBCD) (IB-521)

DS5	Used
HPP	N/A

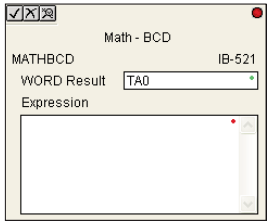

Math - BCD Format lets you enter complex mathematical expressions like you would in Visual Basic, Excel, or C++ to do complex calculations, nesting parentheses up to 4 levels deep. In addition to + - * /, you can do Modulo (% aka Remainder), Bit-wise And (&) Or (|) Xor (^), and some BCD functions - Convert to BCD (BCD), Convert to Binary (BIN), BCD Complement (BCDCPL), Convert from Gray Code (GRAY), Invert Bits (INV), and BCD/HEX to Seven Segment Display (SEG).

Example: ((V2000 + V2001) / (V2003 - K100)) * GRAY(V3000 & K001F)

Every V-memory reference MUST be to a single word BCD formatted value. Intermediate results can go up to 32 bit values, but as long as the final result fits in a 16 bit BCD word, the calculation is valid. Typical example of this is scaling using multiply then divide, (V2000 * K1000) / K4095. The multiply term most likely will exceed 9999 but fits within 32 bits. The divide operation will divide 4095 into the 32-bit accumulator, yielding a result that will always fit in 16 bits.

You can reference binary V-memory values by using the BCD conversion function on a V-memory location but NOT an expression. That is BCD(V2000) is okay and will convert V2000 from Binary to BCD, but BCD(V2000 + V3000) will add V2000 as BCD, to V3000 as BCD, then interpret the result as Binary and convert it to BCD - NOT GOOD.

Also, the final result is a 16 bit BCD number and so you could do BIN around the entire operation to store the result as Binary.

MATHBCD Parameters

- WORD Result: specifies the location where the BCD result of the mathematical expression will be placed (result must fit into 16 bit single V-memory location)
- Expression: specifies the mathematical expression to be executed and the result is stored in specified WORD Result. Each V-memory location used in the expression must be in BCD format.

Parameter	DL05 Range
WORD Result V	See DL05 V-memory map - Data Words
Expression	Text

MATHBCD Example

In the following example, the MATHBCD instruction is used to calculate the math expression which multiplies the BCD value in V1200 by 1000 then divides by 4095 and loads the resulting value in V2000.

Math - Binary (MATHBIN) (IB-501)

DS5	Used
HPP	N/A

Math - Binary Format lets you enter complex mathematical expressions like you would in Visual Basic, Excel, or C++ to do complex calculations, nesting parentheses up to 4 levels deep. In addition to + - * /, you can do Modulo (% aka Remainder), Shift Right (>>) and Shift Left (<<), Bit-wise And (&) Or (|) Xor (^), and some binary functions - Convert to BCD (BCD), Convert to Binary (BIN), Decode Bits (DECO), Encode Bits (ENCO), Invert Bits (INV), HEX to Seven Segment Display (SEG), and Sum Bits (SUM).

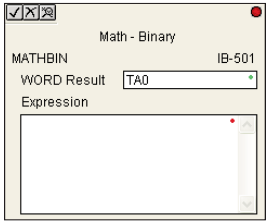

Example: ((V2000 + V2001) / (V2003 - K10)) * SUM(V3000 & K001F)

Every V-memory reference MUST be to a single word binary formatted value. Intermediate results can go up to 32 bit values, but as long as the final result fits in a 16 bit binary word, the calculation is valid. Typical example of this is scaling using multiply then divide, (V2000 * K1000) / K4095. The multiply term most likely will exceed 65535 but fits within 32 bits. The divide operation will divide 4095 into the 32-bit accumulator, yielding a result that will always fit in 16 bits.

You can reference BCD V-memory values by using the BIN conversion function on a V-memory location but NOT an expression. That is, BIN(V2000) is okay and will convert V2000 from BCD to Binary, but BIN(V2000 + V3000) will add V2000 as Binary, to V3000 as Binary, then interpret the result as BCD and convert it to Binary - NOT GOOD.

Also, the final result is a 16 bit binary number and so you could do BCD around the entire operation to store the result as BCD.

MATHBIN Parameters

- WORD Result: specifies the location where the binary result of the mathematical expression will be placed (result must fit into 16 bit single V-memory location)
- Expression: specifies the mathematical expression to be executed and the result is stored in specified WORD Result. Each V-memory location used in the expression must be in binary format.

Parameter	DL05 Range
WORD Result V	See DL05 V-memory map - Data Words
Expression	Text

MATHBIN Example

In the following example, the MATHBIN instruction is used to calculate the math expression which multiplies the Binary value in V1200 by 1000 then divides by 4095 and loads the resulting value in V2000.

Square BCD (SQUARE) (IB-523)

DS5	Used
HPP	N/A

Square BCD squares the given 4-digit WORD BCD number and writes it in as an 8-digit DWORD BCD result.

SQUARE Parameters

- Value (WORD BCD): specifies the BCD Word or constant that will be squared
- Result (DWORD BCD): specifies the location where the squared DWORD BCD value will be placed

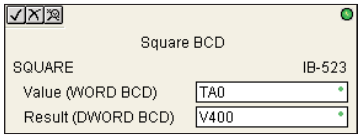

5

Parameter	DL05 Range
Value (WORD BCD) ..... V,P,K	K0-9999 ; See DL05 V-memory map - Data Words
Result (DWORD BCD) V	See DL05 V-memory map - Data Words

SQUARE Example

In the following example, the SQUARE instruction is used to square the 4-digit BCD value in V2000 and store the 8-digit double word BCD result in V3000 and V3001

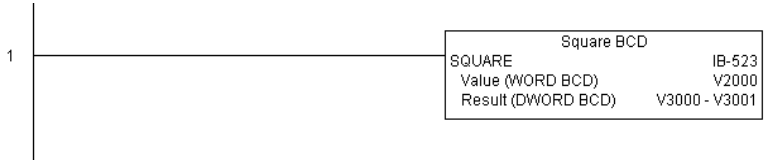

Square Binary (SQUAREB) (IB-503)

DS5	Used
HPP	N/A

Square Binary squares the given 16-bit WORD Binary number and writes it as a 32-bit DWORD Binary result.

SQUAREB Parameters

- Value (WORD Binary): specifies the binary Word or constant that will be squared
- Result (DWORD Binary): specifies the location where the squared DWORD binary value will be placed

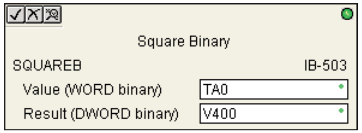

5

Parameter	DL05 Range
Value (WORD Binary) ..... V,P,K	K0-65535; See DL05 V-memory map - Data Words
Result (DWORD Binary) V	See DL05 V-memory map - Data Words

SQUAREB Example

In the following example, the SQUAREB instruction is used to square the single word Binary value in V2000 and store the 8-digit double word Binary result in V3000 and V3001.

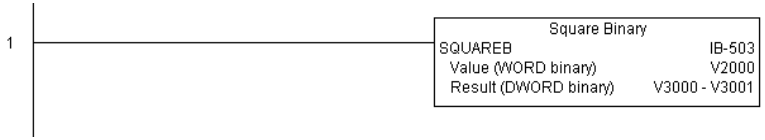

Sum BCD Numbers (SUMBCD) (IB-522)

DS5	Used
HPP	N/A

Sum BCD Numbers sums up a list of consecutive 4-digit WORD BCD numbers into an 8-digit DWORD BCD result.

You specify the group's starting and ending V- memory addresses (inclusive). When enabled, this instruction will add up all the numbers in the group (so you may want to place a differential contact driving the enable).

SUMBCD could be used as the first part of calculating an average.

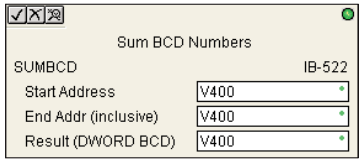

5

SUMBCD Parameters

- Start Address: specifies the starting address of a block of V-memory location values to be added together (BCD)
- End Addr (inclusive): specifies the ending address of a block of V-memory location values to be added together (BCD)
- Result (DWORD BCD): specifies the location where the sum of the block of V-memory BCD values will be placed

Parameter	DL05 Range
Start Address V	See DL05 V-memory map - Data Words
End Address (inclusive) V	See DL05 V-memory map - Data Words
Result (DWORD BCD) V	See DL05 V-memory map - Data Words

SUMBCD Example

In the following example, the SUMBCD instruction is used to total the sum of all BCD values in words V2000 thru V2007 and store the resulting 8-digit double word BCD value in V3000 and V3001.

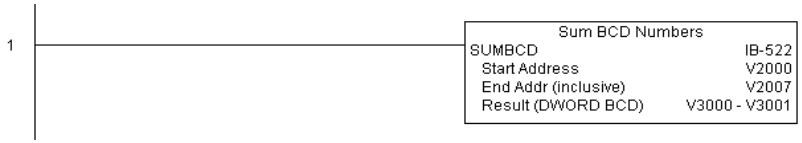

Sum Binary Numbers (SUMBIN) (IB-502)

DS5	Used
HPP	N/A

Sum Binary Numbers sums up a list of consecutive 16-bit WORD Binary numbers into a 32-bit DWORD binary result.

You specify the group's starting and ending V- memory addresses (inclusive). When enabled, this instruction will add up all the numbers in the group (so you may want to place a differential contact driving the enable).

SUMBIN could be used as the first part of calculating an average.

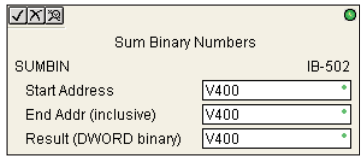

5

SUMBIN Parameters

- Start Address: specifies the starting address of a block of V-memory location values to be added together (Binary)
- End Addr (inclusive): specifies the ending address of a block of V-memory location values to be added together (Binary)
- Result (DWORD Binary): specifies the location where the sum of the block of V-memory binary values will be placed

Parameter	DL05 Range
Start Address V	See DL05 V-memory map - Data Words
End Address (inclusive) V	See DL05 V-memory map - Data Words
Result (DWORD Binary) V	See DL05 V-memory map - Data Words

SUMBIN Example

In the following example, the SUMBIN instruction is used to total the sum of all Binary values in words V2000 thru V2007 and store the resulting 8-digit double word Binary value in V3000 and V3001.

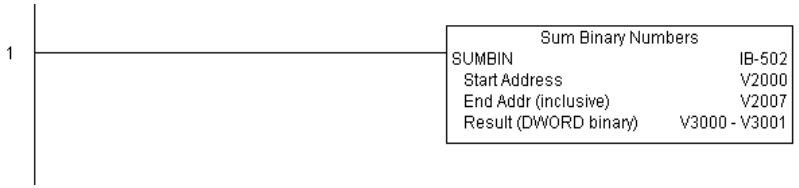

ECOM100 Configuration (ECOM100) (IB-710)

DS5	Used
HPP	N/A

ECOM100 Configuration defines all the common information for one specific ECOM100 module which is used by the other ECOM100 IBoxes; for example, ECRX - ECOM100 Network Read , ECEMAIL - ECOM100 Send EMail, ECIPSUP - ECOM100 IP Setup, etc.

You MUST have the ECOM100 Configuration IBox at the top of your ladder/stage program with any other configuration IBoxes. The Message Buffer parameter specifies the starting address of a 65 WORD buffer. This is 101 Octal addresses (e.g. V1400 thru V1500).

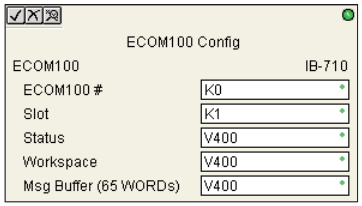

If you have more than one ECOM100 in your PLC, you must have a different ECOM100 Configuration IBox for EACH ECOM100 module in your system that utilizes any ECOM IBox instructions.

The Workspace and Status parameters and the entire Message Buffer are internal, private registers used by the ECOM100 Configuration IBox and MUST BE UNIQUE in this one instruction and MUST NOT be used anywhere else in your program.

In order for MOST ECOM100 IBoxes to function, you must turn ON dip switch 7 on the ECOM100 circuit board. You can keep dip switch 7 off if you are ONLY using ECOM100 Network Read and Write IBoxes (ECRX, ECWX).

ECOM100 Parameters

- ECOM100#: this is a logical number associated with this specific ECOM100 module in the specified slot. All other ECxxxx IBoxes that need to reference this ECOM100 module must reference this logical number
- Slot: specifies the option slot the module occupies
- Status: specifies a V-memory location that will be used by the instruction
- Workspace: specifies a V-memory location that will be used by the instruction
- Msg Buffer: specifies the starting address of a 65 word buffer that will be used by the module for configuration

Parameter	DL05 Range
ECOM100# ..... K	K0-255
Slot ..... K	K1-4
Status V	See DL05 V-memory map - Data Words
Workspace V	See DL05 V-memory map - Data Words
Msg Buffer (65 words used) V	See DL05 V-memory map - Data Words

ECOM100 Example

The ECOM100 Config IBox coordinates all of the interaction with other ECOM100 based IBoxes (ECxxxx). You must have an ECOM100 Config IBox for each ECOM100 module in your system. Configuration IBoxes must be at the top of your program and must execute every scan.

This IBox defines ECOM100# K0 to be in slot 3. Any ECOM100 IBoxes that need to reference this specific module (such as ECEMAIL, ECRX, ...) would enter K0 for their ECOM100# parameter.

The Status register is for reporting any completion or error information to other ECOM100 IBoxes. This V-memory register must not be used anywhere else in the entire program.

The Workspace register is used to maintain state information about the ECOM100, along with proper sharing and interlocking with the other ECOM100 IBoxes in the program. This V-memory register must not be used anywhere else in the entire program.

The Message Buffer of 65 words (130 bytes) is a common pool of memory that is used by other ECOM100 IBoxes (such as ECEMAIL). This way, you can have a bunch of ECEMAIL IBoxes, but only need 1 common buffer for generating and sending each EMail. These V-memory registers must not be used anywhere else in your entire program.

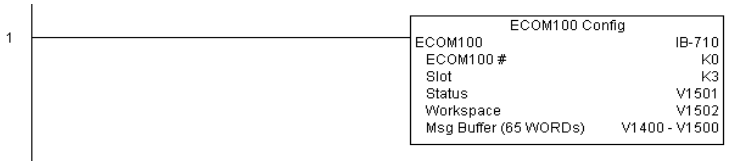

ECOM100 Disable DHCP (ECDHCPD) (IB-736)

DS5	Used
HPP	N/A

ECOM100 Disable DHCP will setup the ECOM100 to use its internal TCP/IP settings on a leading edge transition to the IBox. To configure the ECOM100's TCP/IP settings manually, use the NetEdit3 utility, or you can do it programmatically from your PLC program using the ECOM100 IP Setup (ECIPSUP), or the individual ECOM100 IBoxes: ECOM Write IP Address (ECWRIP), ECOM Write Gateway Address (ECWRGWA), and ECOM100 Write Subnet Mask (ECWRSNM).

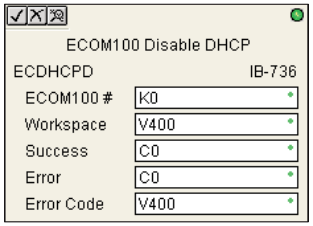

The Workspace parameter is an internal, private register used by this IBox and MUST BE UNIQUE in this one instruction and MUST NOT be used anywhere else in your program.

Either the Success or Error bit parameter will turn on once the command is complete. If there is an error, the Error Code parameter will report an ECOM100 error code (less than 100), or a PLC logic error (greater than 1000).

The "Disable DHCP" setting is stored in Flash-ROM in the ECOM100 and the execution of this IBox will disable the ECOM100 module for at least a half second until it writes the Flash-ROM. Therefore, it is HIGHLY RECOMMENDED that you only execute this IBox ONCE, on second scan. Since it requires a LEADING edge to execute, use a NORMALLY CLOSED SP0 (STR NOT First Scan) to drive the power flow to the IBox.

In order for this ECOM100 IBox to function, you must turn ON dip switch 7 on the ECOM100 circuit board.

ECDHCPD Parameters

- ECOM100#: this is a logical number associated with this specific ECOM100 module in the specified slot. All other ECxxxx IBoxes that need to reference this ECOM100 module must reference this logical number
- Workspace: specifies a V-memory location that will be used by the instruction
- Success: specifies a bit that will turn on once the request is completed successfully
- Error: specifies a bit that will turn on if the instruction is not successfully completed
- Error Code: specifies the location where the Error Code will be written

Parameter	DL05 Range
ECOM100# ..... K	K0-255
Workspace V	See DL05 V-memory map - Data Words
Success ..... X,Y,C,GX,GY,B	See DL05 V-memory map
Error ..... X,Y,C,GX,GY,B	See DL05 V-memory map
Error Code V	See DL05 V-memory map - Data Words

ECDHCPD Example

Rung 1: The ECOM100 Config IBox is responsible for coordination/interlocking of all ECOM100 type IBoxes for one specific ECOM100 module. Tag the ECOM100 in slot 1 as ECOM100# K0. All other ECxxxx IBoxes refer to this module # as K0. If you need to move the module in the base to a different slot, then you only need to change this one IBox. V400 is used as a global result status register for the other ECxxxx IBoxes using this specific ECOM100 module. V401 is used to coordinate/interlock the logic in all of the other ECxxxx IBoxes using this specific ECOM100 module. V402-V502 is a common 130 byte buffer available for use by the other ECxxxx IBoxes using this specific ECOM100 module.

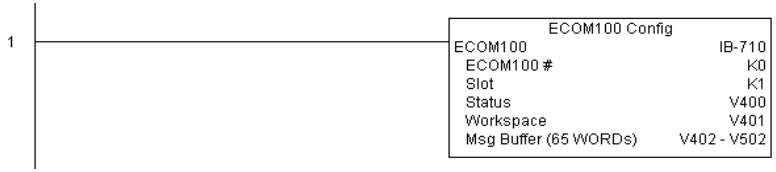

Rung 2: On the 2nd scan, disable DHCP in the ECOM100. DHCP is the same protocol used by PCs for using a DHCP Server to automatically assign the ECOM100's IP Address, Gateway Address, and Subnet Mask. Typically disabling DHCP is done by assigning a hard-coded IP Address either in NetEdit or using one of the ECOM100 IP Setup IBoxes, but this IBox allows you to disable DHCP in the ECOM100 using your ladder program. The ECDHCPD is leading edge triggered, not power-flow driven (similar to a counter input leg). The command to disable DHCP will be sent to the ECOM100 whenever the power flow into the IBox goes from OFF to ON. If successful, turn on C100. If there is a failure, turn on C101. If it fails, you can look at V2000 for the specific error code.

ECOM100 Enable DHCP (ECDHCPE) (IB-735)

ECOM100 Enable DHCP will tell the ECOM100 to obtain its TCP/IP setup from a DHCP Server on a leading edge transition to the IBox.

DS5	Used
HPP	N/A

The IBox will be successful once the ECOM100 has received its TCP/IP settings from the DHCP server. Since it is possible for the DHCP server to be unavailable, a Timeout parameter is provided so the IBox can complete, but with an Error (Error Code = 1004 decimal).

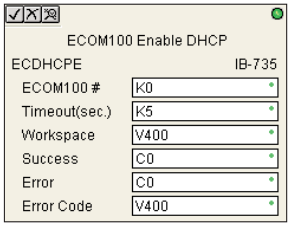

See also the ECOM100 IP Setup (ECIPSUP) IBox 717 to directly setup ALL of the TCP/IP parameters in a single instruction - IP Address, Subnet Mask, and Gateway Address.

The Workspace parameter is an internal, private register used by this IBox and MUST BE UNIQUE in this one instruction and MUST NOT be used anywhere else in your program.

Either the Success or Error bit parameter will turn on once the command is complete. If there is an error, the Error Code parameter will report an ECOM100 error code (less than 100), or a PLC logic error (greater than 1000).

The "Enable DHCP" setting is stored in Flash-ROM in the ECOM100 and the execution of this IBox will disable the ECOM100 module for at least a half second until it writes the Flash-ROM. Therefore, it is HIGHLY RECOMMENDED that you only execute this IBox ONCE, on second scan. Since it requires a LEADING edge to execute, use a NORMALLY CLOSED SP0 (STR NOT First Scan) to drive the power flow to the IBox.

In order for this ECOM100 IBox to function, you must turn ON dip switch 7 on the ECOM100 circuit board.

ECDHCPE Parameters

- ECOM100#: this is a logical number associated with this specific ECOM100 module in the specified slot. All other ECxxxx IBoxes that need to reference this ECOM100 module must reference this logical number
- Timeout(sec): specifies a timeout period so that the instruction may have time to complete
- Workspace: specifies a V-memory location that will be used by the instruction
- Success: specifies a bit that will turn on once the request is completed successfully
- Error: specifies a bit that will turn on if the instruction is not successfully completed
- Error Code: specifies the location where the Error Code will be written

Parameter	DL05 Range
ECOM100# ..... K	K0-255
Timeout (sec) ..... K	K5-127
Workspace V	See DL05 V-memory map - Data Words
Success ..... X,Y,C,GX,GY,B	See DL05 V-memory map
Error ..... X,Y,C,GX,GY,B	See DL05 V-memory map
Error Code V	See DL05 V-memory map - Data Words

ECDHCPE Example

Rung 1: The ECOM100 Config IBox is responsible for coordination/interlocking of all ECOM100 type IBoxes for one specific ECOM100 module. Tag the ECOM100 in slot 1 as ECOM100# K0. All other ECxxxx IBoxes refer to this module # as K0. If you need to move the module in the base to a different slot, then you only need to change this one IBox. V400 is used as a global result status register for the other ECxxxx IBoxes using this specific ECOM100 module. V401 is used to coordinate/interlock the logic in all of the other ECxxxx IBoxes using this specific ECOM100 module. V402-V502 is a common 130 byte buffer available for use by the other ECxxxx IBoxes using this specific ECOM100 module.

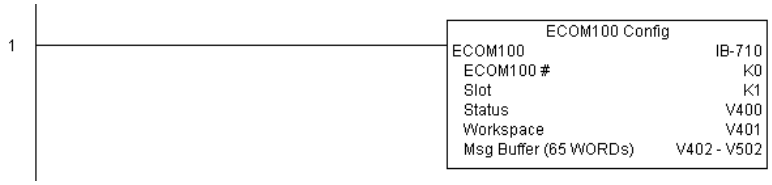

Rung 2: On the 2nd scan, enable DHCP in the ECOM100. DHCP is the same protocol used by PCs for using a DHCP Server to automatically assign the ECOM100's IP Address, Gateway Address, and Subnet Mask. Typically this is done using NetEdit, but this IBox allows you to enable DHCP in the ECOM100 using your ladder program. The ECDHCPE is leading edge triggered, not power-flow driven (similar to a counter input leg). The commands to enable DHCP will be sent to the ECOM100 whenever the power flow into the IBox goes from OFF to ON. The ECDHCPE does more than just set the bit to enable DHCP in the ECOM100, but it then polls the ECOM100 once every second to see if the ECOM100 has found a DHCP server and has a valid IP Address. Therefore, a timeout parameter is needed in case the ECOM100 cannot find a DHCP server. If a timeout does occur, the Error bit will turn on and the error code will be 1005 decimal. The Success bit will turn on only if the ECOM100 finds a DHCP Server and is assigned a valid IP Address. If successful, turn on C100. If there is a failure, turn on C101. If it fails, you can look at V2000 for the specific error code.

ECOM100 Query DHCP Setting (ECDHCPQ) (IB-734)

DS5	Used
HPP	N/A

ECOM100 Query DHCP Setting will determine if DHCP is enabled in the ECOM100 on a leading edge transition to the IBox. The DHCP Enabled bit parameter will be ON if DHCP is enabled, OFF if disabled.

The Workspace parameter is an internal, private register used by this IBox and MUST BE UNIQUE in this one instruction and MUST NOT be used anywhere else in your program.

Either the Success or Error bit parameter will turn on once the command is complete.

In order for this ECOM100 IBox to function, you must turn ON dip switch 7 on the ECOM100 circuit board.

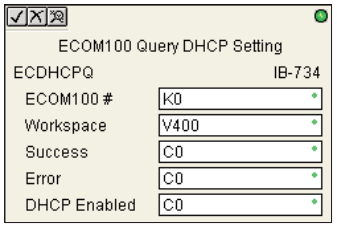

ECDHCPQ Parameters

- ECOM100#: this is a logical number associated with this specific ECOM100 module in the specified slot. All other ECxxxx IBoxes that need to reference this ECOM100 module must reference this logical number
- Workspace: specifies a V-memory location that will be used by the instruction
- Success: specifies a bit that will turn on once the instruction is completed successfully
- Error: specifies a bit that will turn on if the instruction is not successfully completed
- DHCP Enabled: specifies a bit that will turn on if the ECOM100's DHCP is enabled or remain off if disabled - after instruction query, be sure to check the state of the Success/Error bit state along with DHCP Enabled bit state to confirm a successful module query

Parameter	DL05 Range
ECOM100# ..... K	K0-255
Workspace V	See DL05 V-memory map - Data Words
Success ..... X,Y,C,GX,GY,B	See DL05 V-memory map
Error ..... X,Y,C,GX,GY,B	See DL05 V-memory map
DHCP Enabled ..... X,Y,C,GX,GY,B	See DL05 V-memory map

ECDHCPQ Example

Rung 1: The ECOM100 Config IBox is responsible for coordination/interlocking of all ECOM100 type IBoxes for one specific ECOM100 module. Tag the ECOM100 in slot 1 as ECOM100# K0. All other ECxxxx IBoxes refer to this module # as K0. If you need to move the module in the base to a different slot, then you only need to change this one IBox. V400 is used as a global result status register for the other ECxxxx IBoxes using this specific ECOM100 module. V401 is used to coordinate/interlock the logic in all of the other ECxxxx IBoxes using this specific ECOM100 module. V402-V502 is a common 130 byte buffer available for use by the other ECxxxx IBoxes using this specific ECOM100 module.

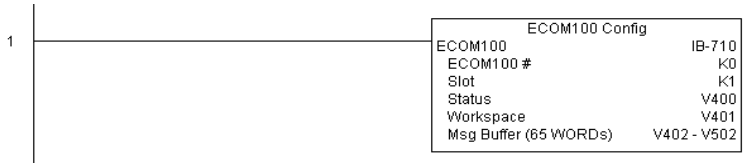

Rung 2: On the 2nd scan, read whether DHCP is enabled or disabled in the ECOM100 and store it in C5. DHCP is the same protocol used by PCs for using a DHCP Server to automatically assign the ECOM100's IP Address, Gateway Address, and Subnet Mask. The ECDHCPQ is leading edge triggered, not power-flow driven (similar to a counter input leg). The command to read (Query) whether DHCP is enabled or not will be sent to the ECOM100 whenever the power flow into the IBox goes from OFF to ON. If successful, turn on C100. If there is a failure, turn on C101.

ECOM100 Send E-mail (ECEMAIL) (IB-711)

DS5	Used
HPP	N/A

ECOM100 Send EMail, on a leading edge transition, will behave as an EMail client and send an SMTP request to your SMTP Server to send the EMail message to the EMail addresses in the To: field and also to those listed in the Cc: list hard coded in the ECOM100. It will send the SMTP request based on the specified ECOM100#, which corresponds to a specific unique ECOM100 Configuration (ECOM100) at the top of your program.

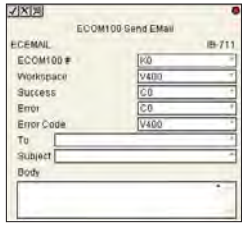

The Body: field supports what the PRINT and VPRINT instructions support for text and embedded variables, allowing you to embed real-time data in your EMail (e.g. "V2000 = " V2000:B).

The Workspace parameter is an internal, private register used by this IBox and MUST BE UNIQUE in this one instruction and MUST NOT be used anywhere else in your program.

Either the Success or Error bit parameter will turn on once the request is complete. If there is an error, the Error Code parameter will report an ECOM100 error code (less than 100), an SMPT protocol error (between 100 and 999), or a PLC logic error (greater than 1000).

Since the ECOM100 is only an EMail Client and requires access to an SMTP Server, you MUST have the SMTP parameters configured properly in the ECOM100 via the ECOM100's Home Page and/or the EMail Setup instruction (ECEMSUP). To get to the ECOM100's Home Page, use your favorite Internet browser and browse to the ECOM100's IP Address, e.g. http://192.168.12.86

You are limited to approximately 100 characters of message data for the entire instruction, including the To: Subject: and Body: fields. To save space, the ECOM100 supports a hard coded list of EMail addresses for the Carbon Copy field (cc:) so that you can configure those IN the ECOM100, and keep the To: field small (or even empty), to leave more room for the Subject: and Body: fields.

In order for this ECOM100 IBox to function, you must turn ON dip switch 7 on the ECOM100 circuit board.

ECEMAIL Parameters

- ECOM100#: this is a logical number associated with this specific ECOM100 module in the specified slot. All other ECxxxx IBoxes that need to reference this ECOM100 module must reference this logical number
- Workspace: specifies a V-memory location that will be used by the instruction
- Success: specifies a bit that will turn on once the request is completed successfully
- Error: specifies a bit that will turn on if the instruction is not successfully completed
- Error Code: specifies the location where the Error Code will be written
- To: specifies an E-mail address that the message will be sent to
- Subject: subject of the e-mail message
- Body: supports what the PRINT and VPRINT instructions support for text and embedded variables, allowing you to embed real-time data in the EMail message

Parameter	DL05 Range
ECOM100# ..... K	K0-255
Workspace V	See DL05 V-memory map - Data Words
Success ..... X,Y,C,GX,GY,B	See DL05 V-memory map
Error ..... X,Y,C,GX,GY,B	See DL05 V-memory map
Error Code V	See DL05 V-memory map
To:.....	Text
Subject:.....	Text
Body:.....	See PRINT and VPRINT instructions

ECEMAIL Example

Rung 1: The ECOM100 Config IBox is responsible for coordination/interlocking of all ECOM100 type IBoxes for one specific ECOM100 module. Tag the ECOM100 in slot 1 as ECOM100# K0. All other ECxxxx IBoxes refer to this module # as K0. If you need to move the module in the base to a different slot, then you only need to change this one IBox. V400 is used as a global result status register for the other ECxxxx IBoxes using this specific ECOM100 module. V401 is used to coordinate/interlock the logic in all of the other ECxxxx IBoxes using this specific ECOM100 module. V402-V502 is a common 130 byte buffer available for use by the other ECxxxx IBoxes using this specific ECOM100 module.

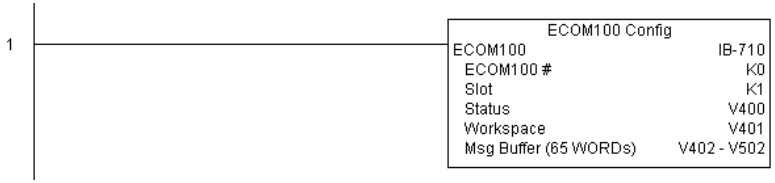

(example continued on next page)

ECEMAIL Example (cont'd)

Rung 2: When a machine goes down, send an email to Joe in maintenance and to the VP over production showing what machine is down along with the date/time stamp of when it went down.

The ECEMAIL is leading edge triggered, not power-flow driven (similar to a counter input leg). An email will be sent whenever the power flow into the IBox goes from OFF to ON. This helps prevent self inflicted spamming.

If the EMail is sent, turn on C100. If there is a failure, turn on C101. If it fails, you can look at V2000 for the SMTP error code or other possible error codes.

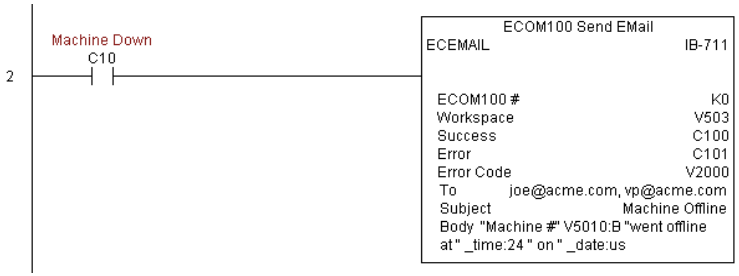

ECOM100 Restore Default E-mail Setup (ECEMRDS) (IB-713)

DS5	Used
HPP	N/A

ECOM100 Restore Default EMail Setup, on a leading edge transition, will restore the original EMail Setup data stored in the ECOM100 back to the working copy based on the specified ECOM100#, which corresponds to a specific unique ECOM100 Configuration (ECOM100) at the top of your program.

When the ECOM100 is first powered up, it copies the EMail setup data stored in ROM to the working copy in RAM. You can then modify this working copy from your program using the ECOM100 EMail Setup (ECEMSUP) IBox. After modifying the working copy, you can later restore the original setup data via your program by using this IBox.

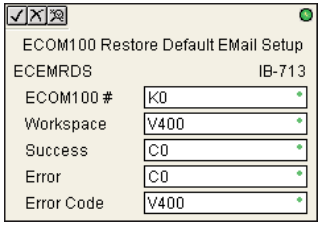

The Workspace parameter is an internal, private register used by this IBox and MUST BE UNIQUE in this one instruction and MUST NOT be used anywhere else in your program.

Either the Success or Error bit parameter will turn on once the command is complete. If there is an error, the Error Code parameter will report an ECOM100 error code (less than 100), or a PLC logic error (greater than 1000).

In order for this ECOM100 IBox to function, you must turn ON dip switch 7 on the ECOM100 circuit board.

ECEMRDS Parameters

- ECOM100#: this is a logical number associated with this specific ECOM100 module in the specified slot. All other ECxxxx IBoxes that need to reference this ECOM100 module must reference this logical number
- Workspace: specifies a V-memory location that will be used by the instruction
- Success: specifies a bit that will turn on once the request is completed successfully
- Error: specifies a bit that will turn on if the instruction is not successfully completed
- Error Code: specifies the location where the Error Code will be written

Parameter	DL05 Range
ECOM100# ..... K	K0-255
Workspace V	See DL05 V-memory map - Data Words
Success ..... X,Y,C,GX,GY,B	See DL05 V-memory map
Error ..... X,Y,C,GX,GY,B	See DL05 V-memory map
Error Code V	See DL05 V-memory map - Data Words

ECEMRDS Example

Rung 1: The ECOM100 Config IBox is responsible for coordination/interlocking of all ECOM100 type IBoxes for one specific ECOM100 module. Tag the ECOM100 in slot 1 as ECOM100# K0. All other ECxxxx IBoxes refer to this module # as K0. If you need to move the module in the base to a different slot, then you only need to change this one IBox. V400 is used as a global result status register for the other ECxxxx IBoxes using this specific ECOM100 module. V401 is used to coordinate/interlock the logic in all of the other ECxxxx IBoxes using this specific ECOM100 module. V402-V502 is a common 130 byte buffer available for use by the other ECxxxx IBoxes using this specific ECOM100 module.

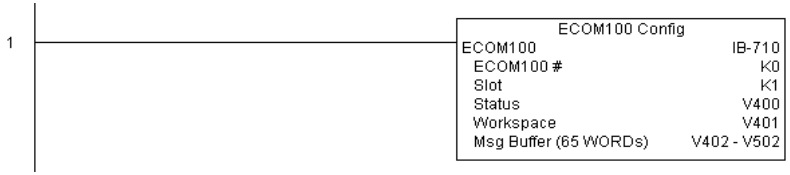

Rung 2: Whenever an EStop is pushed, ensure that president of the company gets copies of all EMails being sent.

The ECOM100 EMail Setup IBox allows you to set/change the SMTP EMail settings stored in the ECOM100.

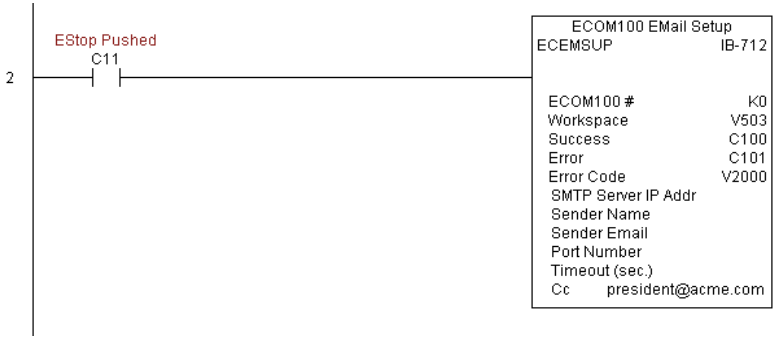

ECEMRDS Example

Rung 3: Once the EStop is pulled out, take the president off the cc: list by restoring the default EMail setup in the ECOM100.

The ECEMRDS is leading edge triggered, not power-flow driven (similar to a counter input leg). The ROM based EMail configuration stored in the ECOM100 will be copied over the "working copy" whenever the power flow into the IBox goes from OFF to ON (the working copy can be changed by using the ECEMSUP IBox).

If successful, turn on C102. If there is a failure, turn on C103. If it fails, you can look at V2001 for the specific error code.

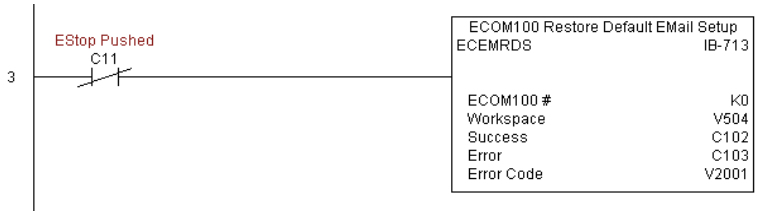

ECOM100 E-mail Setup (ECEMSUP) (IB-712)

DS5	Used
HPP	N/A

ECOM100 EMail Setup, on a leading edge transition, will modify the working copy of the EMail setup currently in the ECOM100 based on the specified ECOM100#, which corresponds to a specific unique ECOM100 Configuration (ECOM100) at the top of your program.

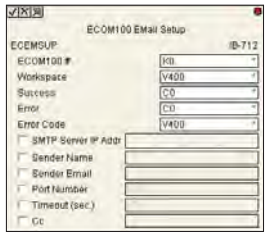

You may pick and choose any or all fields to be modified using this instruction. Note that these changes are cumulative: if you execute multiple ECOM100 EMail Setup IBoxes, then all of the changes are made in the order they are executed. Also note that you can restore the original ECOM100 EMail Setup that is stored in the ECOM100 to the working copy by using the ECOM100 Restore Default EMail Setup (ECEMRDS) IBox.

The Workspace parameter is an internal, private register used by this IBox and MUST BE UNIQUE in this one instruction and MUST NOT be used anywhere else in your program.

Either the Success or Error bit parameter will turn on once the command is complete. If there is an error, the Error Code parameter will report an ECOM100 error code (less than 100), or a PLC logic error (greater than 1000).

You are limited to approximately 100 characters/bytes of setup data for the entire instruction. So if needed, you could divide the entire setup across multiple ECEMSUP IBoxes on a field-by-field basis, for example do the Carbon Copy (cc:) field in one ECEMSUP IBox and the remaining setup parameters in another.

In order for this ECOM100 IBox to function, you must turn ON dip switch 7 on the ECOM100 circuit board.

ECEMSUP Parameters

- ECOM100#: this is a logical number associated with this specific ECOM100 module in the specified slot. All other ECxxxx IBoxes that need to reference this ECOM100 module must reference this logical number
- Workspace: specifies a V-memory location that will be used by the instruction
- Success: specifies a bit that will turn on once the request is completed successfully
- Error: specifies a bit that will turn on if the instruction is not successfully completed
- Error Code: specifies the location where the Error Code will be written
- SMTP Server IP Addr: optional parameter that specifies the IP Address of the SMTP Server on the ECOM100's network
- Sender Name: optional parameter that specifies the sender name that will appear in the "From:" field to those who receive the e-mail
- Sender EMail: optional parameter that specifies the sender EMail address that will appear in the "From:" field to those who receive the e-mail

ECEMSUP Parameters

- Port Number: optional parameter that specifies the TCP/IP Port Number to send SMTP requests; usually this does not to be configured (see your network administrator for information on this setting)
- Timeout (sec): optional parameter that specifies the number of seconds to wait for the SMTP Server to send the EMail to all the recipients
- Cc: optional parameter that specifies a list of "carbon copy" Email addresses to send all EMails to

Parameter	DL05 Range
ECOM100# ..... K	K0-255
Workspace V	See DL05 V-memory map - Data Words
Success ..... X,Y,C,GX,GY,B	See DL05 V-memory map
Error ..... X,Y,C,GX,GY,B	See DL05 V-memory map
Error Code V	See DL05 V-memory map - Data Words

ECEMSUP Example

Rung 1: The ECOM100 Config IBox is responsible for coordination/interlocking of all ECOM100 type IBoxes for one specific ECOM100 module. Tag the ECOM100 in slot 1 as ECOM100# K0. All other ECxxxx IBoxes refer to this module # as K0. If you need to move the module in the base to a different slot, then you only need to change this one IBox. V400 is used as a global result status register for the other ECxxxx IBoxes using this specific ECOM100 module. V401 is used to coordinate/interlock the logic in all of the other ECxxxx IBoxes using this specific ECOM100 module. V402-V502 is a common 130 byte buffer available for use by the other ECxxxx IBoxes using this specific ECOM100 module.

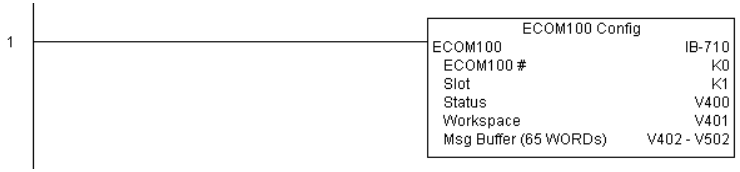

ECEMSUP Example

Rung 2: Whenever an EStop is pushed, ensure that president of the company gets copies of all EMails being sent.The ECOM100 EMail Setup IBox allows you to set/change the SMTP EMail settings stored in the ECOM100. The ECEMSUP is leading edge triggered, not power-flow driven (similar to a counter input leg). At power-up, the ROM based EMail configuration stored in the ECOM100 is copied to a RAM based "working copy". You can change this working copy by using the ECEMSUP IBox. To restore the original ROM based configuration, use the Restore Default EMail Setup ECEMRDS IBox.

If successful, turn on C100. If there is a failure, turn on C101. If it fails, you can look at V2000 for the specific error code.

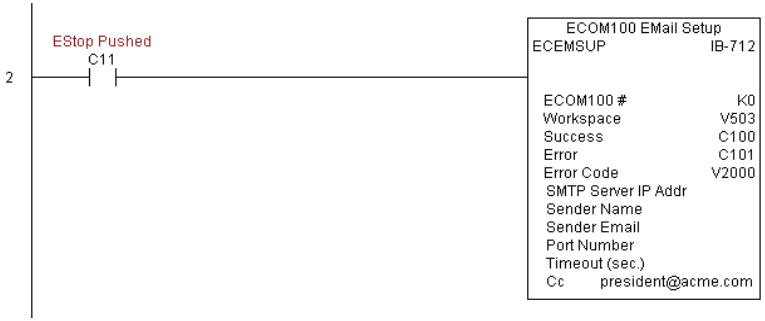

Rung 3: Once the EStop is pulled out, take the president off the cc: list by restoring the default EMail setup in the ECOM100.

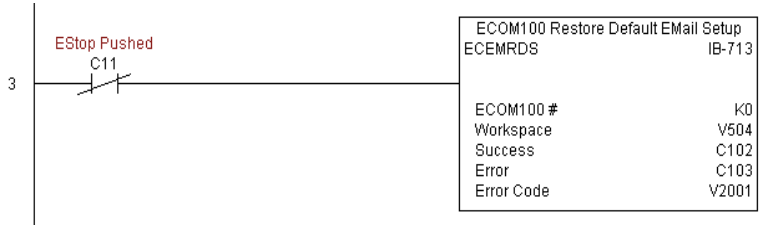

ECOM100 IP Setup (ECIPSUP) (IB-717)

DS5	Used
HPP	N/A

ECOM100 IP Setup will configure the three TCP/IP parameters in the ECOM100: IP Address, Subnet Mask, and Gateway Address, on a leading edge transition to the IBox. The ECOM100 is specified by the ECOM100#, which corresponds to a specific unique ECOM100 Configuration (ECOM100) IBox at the top of your program.

The Workspace parameter is an internal, private register used by this IBox and MUST BE UNIQUE in this one instruction and MUST NOT be used anywhere else in your program.

Either the Success or Error bit parameter will turn on once the command is complete. If there is an error, the Error Code parameter will report an ECOM100 error code (less than 100), or a PLC logic error (greater than 1000).

ECOM100 IP Setup
ECIPSUP IB-717
ECOM100 # K0
Workspace V400
Success C0
Error C0
Error Code V400
IP Address 0 . 0 . 0 . 0
Subnet Mask 0 . 0 . 0 . 0
Gateway Address 0 . 0 . 0 . 0

This setup data is stored in Flash-ROM in the ECOM100 and will disable the ECOM100 module for at least a half second until it writes the Flash-ROM. Therefore, it is HIGHLY RECOMMENDED that you only execute this IBox ONCE on second scan. Since it requires a LEADING edge to execute, use a NORMALLY CLOSED SP0 (NOT First Scan) to drive the power flow to the IBox.

In order for this ECOM100 IBox to function, you must turn ON dip switch 7 on the ECOM100 circuit board.

ECIPSUP Parameters

- ECOM100#: this is a logical number associated with this specific ECOM100 module in the specified slot. All other ECxxxx IBoxes that need to reference this ECOM100 module must reference this logical number
- Workspace: specifies a V-memory location that will be used by the instruction
- Success: specifies a bit that will turn on once the request is completed successfully
- Error: specifies a bit that will turn on if the instruction is not successfully completed
- Error Code: specifies the location where the Error Code will be written
- IP Address: specifies the module's IP Address
- Subnet Mask: specifies the Subnet Mask for the module to use
- Gateway Address: specifies the Gateway Address for the module to use

Parameter	DL05 Range
ECOM100# ..... K	K0-255
Workspace V	See DL05 V-memory map - Data Words
Success ..... X,Y,C,GX,GY,B	See DL05 V-memory map
Error ..... X,Y,C,GX,GY,B	See DL05 V-memory map
Error Code V	See DL05 V-memory map - Data Words
IP Address ..... IP Address	0.0.0.1. to 255.255.255.254
Subnet Mask Address ..... IP Address Mask	0.0.0.1. to 255.255.255.254
Gateway Address ..... IP Address	0.0.0.1. to 255.255.255.254

ECIPSUP Example

Rung 1: The ECOM100 Config IBox is responsible for coordination/interlocking of all ECOM100 type IBoxes for one specific ECOM100 module. Tag the ECOM100 in slot 1 as ECOM100# K0. All other ECxxxx IBoxes refer to this module # as K0. If you need to move the module in the base to a different slot, then you only need to change this one IBox. V400 is used as a global result status register for the other ECxxxx IBoxes using this specific ECOM100 module.V401 is used to coordinate/interlock the logic in all of the other ECxxxx IBoxes using this specific ECOM100 module. V402-V502 is a common 130 byte buffer available for use by the other ECxxxx IBoxes using this specific ECOM100 module.

1

ECOM100 Config
ECOM100 IB-710
ECOM100 # K0
Slot K1
Status V400
Workspace V401
Msg Buffer (65 WORDs) V402 - V502

Rung 2: On the 2nd scan, configure all of the TCP/IP parameters in the ECOM100:

IP Address: 192.168. 12.100

Subnet Mask: 255.255. 0. 0

Gateway Address: 192.168. 0. 1

The ECIPSUP is leading edge triggered, not power-flow driven (similar to a counter input leg). The command to write the TCP/IP configuration parameters will be sent to the ECOM100 whenever the power flow into the IBox goes from OFF to ON.

If successful, turn on C100. If there is a failure, turn on C101. If it fails, you can look at V2000 for the specific error code.

2

_FirstScan
SP0

ECOM100 IP Setup
ECIPSUP IB-717
ECOM100 # K0
Workspace V503
Success C100
Error C101
Error Code V2000
IP Address 192.168.12.100
Subnet Mask 255.255.0.0
Gateway Address 192.168.0.1

ECOM100 Read Description (ECRDDES) (IB-726)

DS5	Used
HPP	N/A

ECOM100 Read Description will read the ECOM100's Description field up to the number of specified characters on a leading edge transition to the IBox.

The Workspace parameter is an internal, private register used by this IBox and MUST BE UNIQUE in this one instruction and MUST NOT be used anywhere else in your program.

Either the Success or Error bit parameter will turn on once the command is complete.

In order for this ECOM100 IBox to function, you must turn ON dip switch 7 on the ECOM100 circuit board.

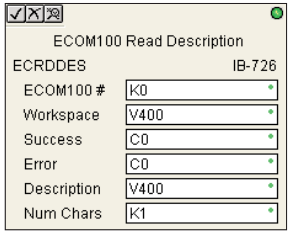

5

ECRDDES Parameters

- ECOM100#: this is a logical number associated with this specific ECOM100 module in the specified slot. All other ECxxxx IBoxes that need to reference this ECOM100 module must reference this logical number
- Workspace: specifies a V-memory location that will be used by the instruction
- Success: specifies a bit that will turn on once the request is completed successfully
- Error: specifies a bit that will turn on if the instruction is not successfully completed
- Description: specifies the starting buffer location where the ECOM100's Module Name will be placed
- Num Char: specifies the number of characters (bytes) to read from the ECOM100's Description field

Parameter	DL05 Range
ECOM100# ..... K	K0-255
Workspace V	See DL05 V-memory map - Data Words
Success ..... X,Y,C,GX,GY,B	See DL05 V-memory map
Error ..... X,Y,C,GX,GY,B	See DL05 V-memory map
Description V	See DL05 V-memory map - Data Words
Num Chars ..... K	K1-128

ECRDDES Example

Rung 1: The ECOM100 Config IBox is responsible for coordination/interlocking of all ECOM100 type IBoxes for one specific ECOM100 module. Tag the ECOM100 in slot 1 as ECOM100# K0. All other ECxxxx IBoxes refer to this module # as K0. If you need to move the module in the base to a different slot, then you only need to change this one IBox. V400 is used as a global result status register for the other ECxxxx IBoxes using this specific ECOM100 module.V401 is used to coordinate/interlock the logic in all of the other ECxxxx IBoxes using this specific ECOM100 module. V402-V502 is a common 130 byte buffer available for use by the other ECxxxx IBoxes using this specific ECOM100 module.

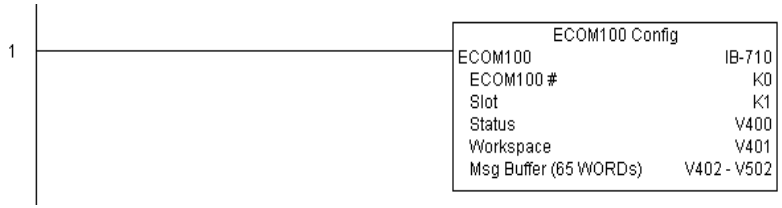

5

Rung 2: On the 2nd scan, read the Module Description of the ECOM100 and store it in V3000 thru V3007 (16 characters). This text can be displayed by an HMI.

The ECRDDES is leading edge triggered, not power-flow driven (similar to a counter input leg). The command to read the module description will be sent to the ECOM100 whenever the power flow into the IBox goes from OFF to ON.

If successful, turn on C100. If there is a failure, turn on C101.

ECOM100 Read Gateway Address (ECRDGWA) (IB-730)

DS5	Used
HPP	N/A

ECOM100 Read Gateway Address will read the 4 parts of the Gateway IP address and store them in 4 consecutive V-memory locations in decimal format, on a leading edge transition to the IBox.

The Workspace parameter is an internal, private register used by this IBox and MUST BE UNIQUE in this one instruction and MUST NOT be used anywhere else in your program.

Either the Success or Error bit parameter will turn on once the command is complete.

In order for this ECOM100 IBox to function, you must turn ON dip switch 7 on the ECOM100 circuit board.

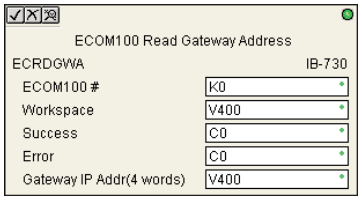

5

ECRDGWA Parameters

- ECOM100#: this is a logical number associated with this specific ECOM100 module in the specified slot. All other ECxxxx IBoxes that need to reference this ECOM100 module must reference this logical number
- Workspace: specifies a V-memory location that will be used by the instruction
- Success: specifies a bit that will turn on once the request is completed successfully
- Error: specifies a bit that will turn on if the instruction is not successfully completed
- Gateway IP Addr: specifies the starting address where the ECOM100's Gateway Address will be placed in 4 consecutive V-memory locations

Parameter	DL05 Range
ECOM100# ..... K	K0-255
Workspace V	See DL05 V-memory map - Data Words
Success ..... X,Y,C,GX,GY,B	See DL05 V-memory map
Error ..... X,Y,C,GX,GY,B	See DL05 V-memory map
Gateway IP Address (4 Words) V	See DL05 V-memory map - Data Words

ECRDGWA Example

Rung 1: The ECOM100 Config IBox is responsible for coordination/interlocking of all ECOM100 type IBoxes for one specific ECOM100 module. Tag the ECOM100 in slot 1 as ECOM100# K0. All other ECxxxx IBoxes refer to this module # as K0. If you need to move the module in the base to a different slot, then you only need to change this one IBox. V400 is used as a global result status register for the other ECxxxx IBoxes using this specific ECOM100 module. V401 is used to coordinate/interlock the logic in all of the other ECxxxx IBoxes using this specific ECOM100 module. V402-V502 is a common 130 byte buffer available for use by the other ECxxxx IBoxes using this specific ECOM100 module.

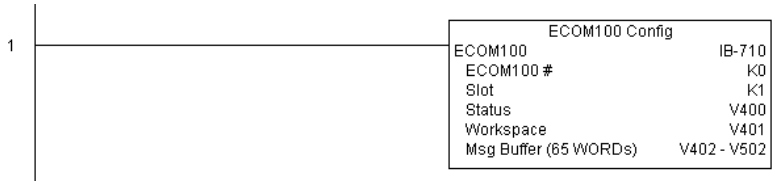

5

Rung 2: On the 2nd scan, read the Gateway Address of the ECOM100 and store it in V3000 thru V3003 (4 decimal numbers). The ECOM100's Gateway Address could be displayed by an HMI.

The ECRDGWA is leading edge triggered, not power-flow driven (similar to a counter input leg). The command to read the Gateway Address will be sent to the ECOM100 whenever the power flow into the IBox goes from OFF to ON.

If successful, turn on C100. If there is a failure, turn on C101.

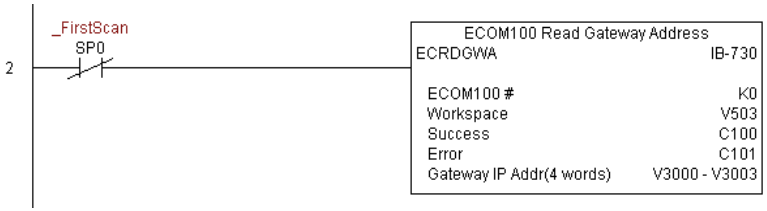

ECOM100 Read IP Address (ECRDIP) (IB-722)

DS5	Used
HPP	N/A

ECOM100 Read IP Address will read the 4 parts of the IP address and store them in 4 consecutive V-memory locations in decimal format, on a leading edge transition to the IBox.

The Workspace parameter is an internal, private register used by this IBox and MUST BE UNIQUE in this one instruction and MUST NOT be used anywhere else in your program.

Either the Success or Error bit parameter will turn on once the command is complete.

In order for this ECOM100 IBox to function, you must turn ON dip switch 7 on the ECOM100 circuit board.

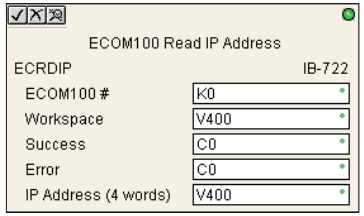

5

ECRDIP Parameters

- ECOM100#: this is a logical number associated with this specific ECOM100 module in the specified slot. All other ECxxxx IBoxes that need to reference this ECOM100 module must reference this logical number
- Workspace: specifies a V-memory location that will be used by the instruction
- Success: specifies a bit that will turn on once the request is completed successfully
- Error: specifies a bit that will turn on if the instruction is not successfully completed
- IP Address: specifies the starting address where the ECOM100's IP Address will be placed in 4 consecutive V-memory locations

Parameter	DL05 Range
ECOM100# ..... K	K0-255
Workspace V	See DL05 V-memory map - Data Words
Success ..... X,Y,C,GX,GY,B	See DL05 V-memory map
Error ..... X,Y,C,GX,GY,B	See DL05 V-memory map
IP Address (4 Words) V	See DL05 V-memory map - Data Words

ECRDIP Example

Rung 1: The ECOM100 Config IBox is responsible for coordination/interlocking of all ECOM100 type IBoxes for one specific ECOM100 module. Tag the ECOM100 in slot 1 as ECOM100# K0. All other ECxxxx IBoxes refer to this module # as K0. If you need to move the module in the base to a different slot, then you only need to change this one IBox. V400 is used as a global result status register for the other ECxxxx IBoxes using this specific ECOM100 module. V401 is used to coordinate/interlock the logic in all of the other ECxxxx IBoxes using this specific ECOM100 module. V402-V502 is a common 130 byte buffer available for use by the other ECxxxx IBoxes using this specific ECOM100 module.

5

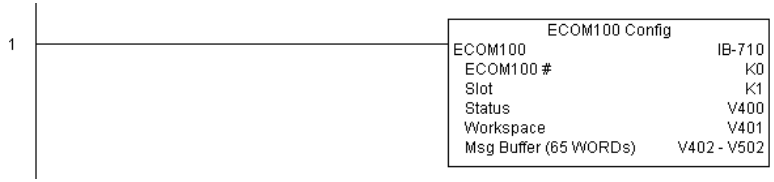

Rung 2: On the 2nd scan, read the IP Address of the ECOM100 and store it in V3000 thru V3003 (4 decimal numbers). The ECOM100's IP Address could be displayed by an HMI.

The ECRDIP is leading edge triggered, not power-flow driven (similar to a counter input leg). The command to read the IP Address will be sent to the ECOM100 whenever the power flow into the IBox goes from OFF to ON.

If successful, turn on C100. If there is a failure, turn on C101.

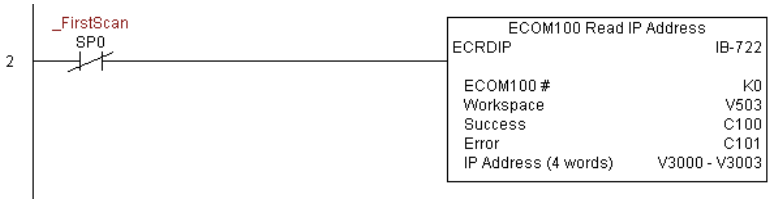

ECOM100 Read Module ID (ECRDMID) (IB-720)

DS5	Used
HPP	N/A

ECOM100 Read Module ID will read the binary (decimal) WORD sized Module ID on a leading edge transition to the IBox.

The Workspace parameter is an internal, private register used by this IBox and MUST BE UNIQUE in this one instruction and MUST NOT be used anywhere else in your program.

Either the Success or Error bit parameter will turn on once the command is complete.

In order for this ECOM100 IBox to function, you must turn ON dip switch 7 on the ECOM100 circuit board.

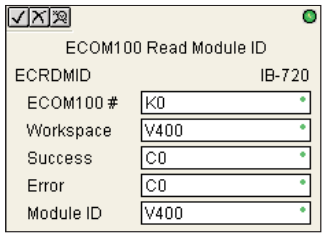

ECRDMID Parameters

- ECOM100#: this is a logical number associated with this specific ECOM100 module in the specified slot. All other ECxxxx IBoxes that need to reference this ECOM100 module must reference this logical number
- Workspace: specifies a V-memory location that will be used by the instruction
- Success: specifies a bit that will turn on once the request is completed successfully
- Error: specifies a bit that will turn on if the instruction is not successfully completed
- Module ID: specifies the location where the ECOM100's Module ID (decimal) will be placed

Parameter	DL05 Range
ECOM100# ..... K	K0-255
Workspace V	See DL05 V-memory map - Data Words
Success ..... X,Y,C,GX,GY,B	See DL05 V-memory map
Error ..... X,Y,C,GX,GY,B	See DL05 V-memory map
Module ID..... V	See DL05 V-memory map - Data Words

ECRDMID Example

Rung 1: The ECOM100 Config IBox is responsible for coordination/interlocking of all ECOM100 type IBoxes for one specific ECOM100 module. Tag the ECOM100 in slot 1 as ECOM100# K0. All other ECxxxx IBoxes refer to this module # as K0. If you need to move the module in the base to a different slot, then you only need to change this one IBox. V400 is used as a global result status register for the other ECxxxx IBoxes using this specific ECOM100 module.V401 is used to coordinate/interlock the logic in all of the other ECxxxx IBoxes using this specific ECOM100 module. V402-V502 is a common 130 byte buffer available for use by the other ECxxxx IBoxes using this specific ECOM100 module.

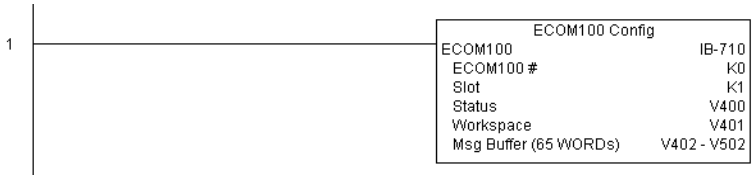

Rung 2: On the 2nd scan, read the Module ID of the ECOM100 and store it in V2000.

The ECRDMID is leading edge triggered, not power-flow driven (similar to a counter input leg). The command to read the module ID will be sent to the ECOM100 whenever the power flow into the IBox goes from OFF to ON.

If successful, turn on C100. If there is a failure, turn on C101.

ECOM100 Read Module Name (ECRDNAM) (IB-724)

DS5	Used
HPP	N/A

ECOM100 Read Name will read the Module Name up to the number of specified characters on a leading edge transition to the IBox.

The Workspace parameter is an internal, private register used by this IBox and MUST BE UNIQUE in this one instruction and MUST NOT be used anywhere else in your program.

Either the Success or Error bit parameter will turn on once the command is complete.

In order for this ECOM100 IBox to function, you must turn ON dip switch 7 on the ECOM100 circuit board.

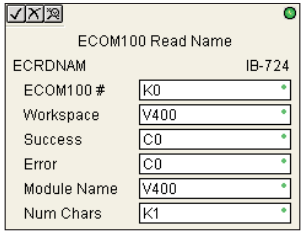

5

ECRDNAM Parameters

- ECOM100#: this is a logical number associated with this specific ECOM100 module in the specified slot. All other ECxxxx IBoxes that need to reference this ECOM100 module must reference this logical number
- Workspace: specifies a V-memory location that will be used by the instruction
- Success: specifies a bit that will turn on once the request is completed successfully
- Error: specifies a bit that will turn on if the instruction is not successfully completed
- Module Name: specifies the starting buffer location where the ECOM100's Module Name will be placed
- Num Chars: specifies the number of characters (bytes) to read from the ECOM100's Name field

Parameter	DL05 Range
ECOM100# ..... K	K0-255
Workspace V	See DL05 V-memory map - Data Words
Success ..... X,Y,C,GX,GY,B	See DL05 V-memory map
Error ..... X,Y,C,GX,GY,B	See DL05 V-memory map
Module Name V	See DL05 V-memory map - Data Words
Num Chars ..... K	K1-128

ECRDNAM Example

Rung 1: The ECOM100 Config IBox is responsible for coordination/interlocking of all ECOM100 type IBoxes for one specific ECOM100 module. Tag the ECOM100 in slot 1 as ECOM100# K0. All other ECxxxx IBoxes refer to this module # as K0. If you need to move the module in the base to a different slot, then you only need to change this one IBox. V400 is used as a global result status register for the other ECxxxx IBoxes using this specific ECOM100 module. V401 is used to coordinate/interlock the logic in all of the other ECxxxx IBoxes using this specific ECOM100 module. V402-V502 is a common 130 byte buffer available for use by the other ECxxxx IBoxes using this specific ECOM100 module.

5

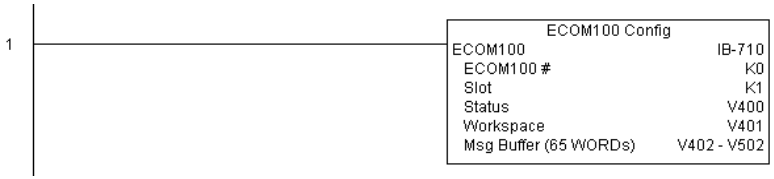

Rung 2: On the 2nd scan, read the Module Name of the ECOM100 and store it in V3000 thru V3003 (8 characters). This text can be displayed by an HMI.

The ECRDNAM is leading edge triggered, not power-flow driven (similar to a counter input leg). The command to read the module name will be sent to the ECOM100 whenever the power flow into the IBox goes from OFF to ON.

If successful, turn on C100. If there is a failure, turn on C101.

ECOM100 Read Subnet Mask (ECRDSNM) (IB-732)

DS5	Used
HPP	N/A

ECOM100 Read Subnet Mask will read the 4 parts of the Subnet Mask and store them in 4 consecutive V-memory locations in decimal format, on a leading edge transition to the IBox.

The Workspace parameter is an internal, private register used by this IBox and MUST BE UNIQUE in this one instruction and MUST NOT be used anywhere else in your program.

Either the Success or Error bit parameter will turn on once the command is complete.

In order for this ECOM100 IBox to function, you must turn ON dip switch 7 on the ECOM100 circuit board.

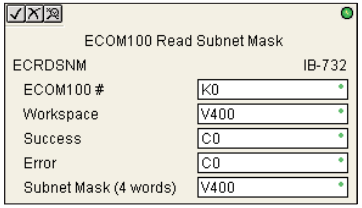

ECRDSNM Parameters

- ECOM100#: this is a logical number associated with this specific ECOM100 module in the specified slot. All other ECxxxx IBoxes that need to reference this ECOM100 module must reference this logical number
- Workspace: specifies a V-memory location that will be used by the instruction
- Success: specifies a bit that will turn on once the request is completed successfully
- Error: specifies a bit that will turn on if the instruction is not successfully completed
- Subnet Mask: specifies the starting address where the ECOM100's Subnet Mask will be placed in 4 consecutive V-memory locations

Parameter	DL05 Range
ECOM100# ..... K	K0-255
Workspace V	See DL05 V-memory map - Data Words
Success ..... X,Y,C,GX,GY,B	See DL05 V-memory map
Error ..... X,Y,C,GX,GY,B	See DL05 V-memory map
Subnet Mask (4 Words)..... V	See DL05 V-memory map - Data Words

ECRDSNM Example

Rung 1: The ECOM100 Config IBox is responsible for coordination/interlocking of all ECOM100 type IBoxes for one specific ECOM100 module. Tag the ECOM100 in slot 1 as ECOM100# K0. All other ECxxxx IBoxes refer to this module # as K0. If you need to move the module in the base to a different slot, then you only need to change this one IBox. V400 is used as a global result status register for the other ECxxxx IBoxes using this specific ECOM100 module. V401 is used to coordinate/interlock the logic in all of the other ECxxxx IBoxes using this specific ECOM100 module. V402-V502 is a common 130 byte buffer available for use by the other ECxxxx IBoxes using this specific ECOM100 module.

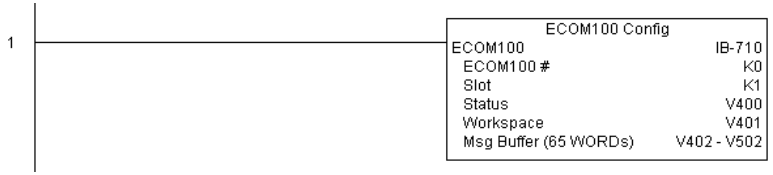

Rung 2: On the 2nd scan, read the Subnet Mask of the ECOM100 and store it in V3000 thru V3003 (4 decimal numbers). The ECOM100's Subnet Mask could be displayed by an HMI.

The ECRDSNM is leading edge triggered, not power-flow driven (similar to a counter input leg). The command to read the Subnet Mask will be sent to the ECOM100 whenever the power flow into the IBox goes from OFF to ON.

If successful, turn on C100. If there is a failure, turn on C101.

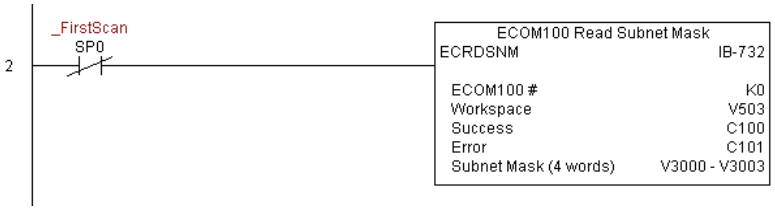

ECOM100 Write Description (ECWRDES) (IB-727)

DS5	Used
HPP	N/A

ECOM100 Write Description will write the given Description to the ECOM100 module on a leading edge transition to the IBox. If you use a dollar sign ($) or double quote ("), use the PRINT/VPRINT escape sequence of TWO dollar signs ($$) for a single dollar sign or dollar sign-double quote ($") for a double quote character.

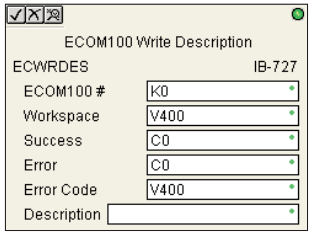

The Workspace parameter is an internal, private register used by this IBox and MUST BE UNIQUE in this one instruction and MUST NOT be used anywhere else in your program.

Either the Success or Error bit parameter will turn on once the command is complete. If there is an error, the Error Code parameter will report an ECOM100 error code (less than 100), or a PLC logic error (greater than 1000).

The Description is stored in Flash-ROM in the ECOM100 and the execution of this IBox will disable the ECOM100 module for at least a half second until it writes the Flash-ROM. Therefore, it is HIGHLY RECOMMENDED that you only execute this IBox ONCE on second scan. Since it requires a LEADING edge to execute, use a NORMALLY CLOSED SP0 (STR NOT First Scan) to drive the power flow to the IBox.

In order for this ECOM100 IBox to function, you must turn ON dip switch 7 on the ECOM100 circuit board.

ECWRDES Parameters

- ECOM100#: this is a logical number associated with this specific ECOM100 module in the specified slot. All other ECxxxx IBoxes that need to reference this ECOM100 module must reference this logical number
- Workspace: specifies a V-memory location that will be used by the instruction
- Success: specifies a bit that will turn on once the request is completed successfully
- Error: specifies a bit that will turn on if the instruction is not successfully completed
- Error Code: specifies the location where the Error Code will be written
- Description: specifies the Description that will be written to the module

Parameter	DL05 Range
ECOM100# ..... K	K0-255
Workspace V	See DL05 V-memory map - Data Words
Success ..... X,Y,C,GX,GY,B	See DL05 V-memory map
Error ..... X,Y,C,GX,GY,B	See DL05 V-memory map
Error Code V	See DL05 V-memory map - Data Words
Description	Text

ECWRDES Example

Rung 1: The ECOM100 Config IBox is responsible for coordination/interlocking of all ECOM100 type IBoxes for one specific ECOM100 module. Tag the ECOM100 in slot 1 as ECOM100# K0. All other ECxxxx IBoxes refer to this module # as K0. If you need to move the module in the base to a different slot, then you only need to change this one IBox. V400 is used as a global result status register for the other ECxxxx IBoxes using this specific ECOM100 module. V401 is used to coordinate/interlock the logic in all of the other ECxxxx IBoxes using this specific ECOM100 module. V402-V502 is a common 130 byte buffer available for use by the other ECxxxx IBoxes using this specific ECOM100 module.

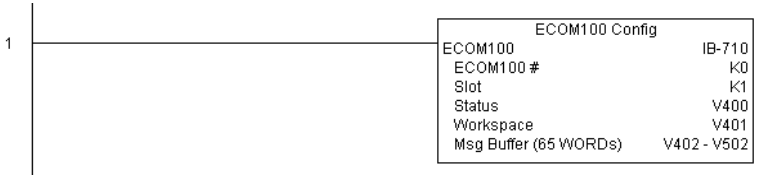

Rung 2: On the 2nd scan, set the Module Description of the ECOM100. Typically this is done using NetEdit, but this IBox allows you to configure the module description in the ECOM100 using your ladder program.

The EWRDES is leading edge triggered, not power-flow driven (similar to a counter input leg). The command to write the module description will be sent to the ECOM100 whenever the power flow into the IBox goes from OFF to ON.

If successful, turn on C100. If there is a failure, turn on C101. If it fails, you can look at V2000 for the specific error code.

ECOM100 Write Gateway Address (ECWRGWA) (IB-731)

DS5	Used
HPP	N/A

ECOM100 Write Gateway Address will write the given Gateway IP Address to the ECOM100 module on a leading edge transition to the IBox. See also ECOM100 IP Setup (ECIPSUP) IBox 717 to setup ALL of the TCP/IP parameters in a single instruction - IP Address, Subnet Mask, and Gateway Address.

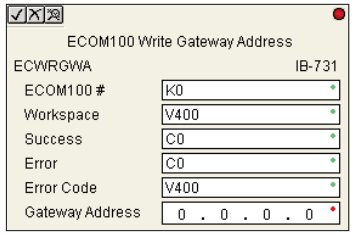

The Workspace parameter is an internal, private register used by this IBox and MUST BE UNIQUE in this one instruction and MUST NOT be used anywhere else in your program.

Either the Success or Error bit parameter will turn on once the command is complete. If there is an error, the Error Code parameter will report an ECOM100 error code (less than 100), or a PLC logic error (greater than 1000).

The Gateway Address is stored in Flash-ROM in the ECOM100 and the execution of this IBox will disable the ECOM100 module for at least a half second until it writes the Flash-ROM. Therefore, it is HIGHLY RECOMMENDED that you only execute this IBox ONCE, on second scan. Since it requires a LEADING edge to execute, use a NORMALLY CLOSED SP0 (STR NOT First Scan) to drive the power flow to the IBox.

In order for this ECOM100 IBox to function, you must turn ON dip switch 7 on the ECOM100 circuit board.

ECWRGWA Parameters

- ECOM100#: this is a logical number associated with this specific ECOM100 module in the specified slot. All other ECxxxx IBoxes that need to reference this ECOM100 module must reference this logical number
- Workspace: specifies a V-memory location that will be used by the instruction
- Success: specifies a bit that will turn on once the request is completed successfully
- Error: specifies a bit that will turn on if the instruction is not successfully completed
- Error Code: specifies the location where the Error Code will be written
- Gateway Address: specifies the Gateway IP Address that will be written to the module

Parameter	DL05 Range
ECOM100# ..... K	K0-255
Workspace V	See DL05 V-memory map - Data Words
Success ..... X,Y,C,GX,GY,B	See DL05 V-memory map
Error ..... X,Y,C,GX,GY,B	See DL05 V-memory map
Error Code V	See DL05 V-memory map - Data Words
Gateway Address	0.0.0.1. to 255.255.255.254

ECWRGWA Example

Rung 1: The ECOM100 Config IBox is responsible for coordination/interlocking of all ECOM100 type IBoxes for one specific ECOM100 module. Tag the ECOM100 in slot 1 as ECOM100# K0. All other ECxxxx IBoxes refer to this module # as K0. If you need to move the module in the base to a different slot, then you only need to change this one IBox. V400 is used as a global result status register for the other ECxxxx IBoxes using this specific ECOM100 module. V401 is used to coordinate/interlock the logic in all of the other ECxxxx IBoxes using this specific ECOM100 module. V402-V502 is a common 130 byte buffer available for use by the other ECxxxx IBoxes using this specific ECOM100 module.

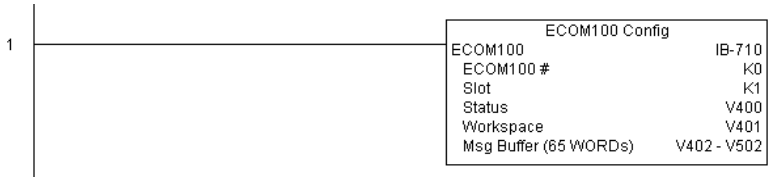

Rung 2: On the 2nd scan, assign the Gateway Address of the ECOM100 to 192.168.0.1

The ECWRGWA is leading edge triggered, not power-flow driven (similar to a counter input leg). The command to write the Gateway Address will be sent to the ECOM100 whenever the power flow into the IBox goes from OFF to ON.

If successful, turn on C100. If there is a failure, turn on C101. If it fails, you can look at V2000 for the specific error code.

To configure all of the ECOM100 TCP/IP parameters in one IBox, see the ECOM100 IP Setup (ECIPSUP) IBox.

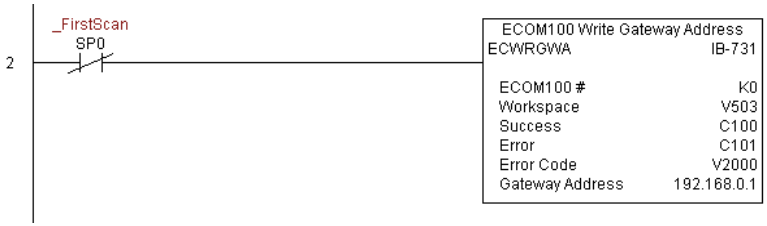

ECOM100 Write IP Address (ECWRIP) (IB-723)

DS5	Used
HPP	N/A

ECOM100 Write IP Address will write the given IP Address to the ECOM100 module on a leading edge transition to the IBox. See also ECOM100 IP Setup (ECIPSUP) IBox 717 to setup ALL of the TCP/IP parameters in a single instruction - IP Address, Subnet Mask, and Gateway Address.

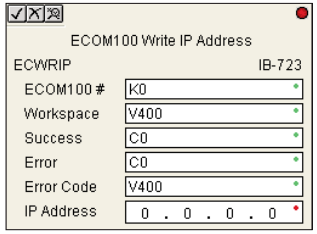

The Workspace parameter is an internal, private register used by this IBox and MUST BE UNIQUE in this one instruction and MUST NOT be used anywhere else in your program.

Either the Success or Error bit parameter will turn on once the command is complete. If there is an error, the Error Code parameter will report an ECOM100 error code (less than 100), or a PLC logic error (greater than 1000).

The IP Address is stored in Flash-ROM in the ECOM100 and the execution of this IBox will disable the ECOM100 module for at least a half second until it writes the Flash-ROM. Therefore, it is HIGHLY RECOMMENDED that you only execute this IBox ONCE on second scan. Since it requires a LEADING edge to execute, use a NORMALLY CLOSED SP0 (STR NOT First Scan) to drive the power flow to the IBox.

In order for this ECOM100 IBox to function, you must turn ON dip switch 7 on the ECOM100 circuit board.

ECWRIP Parameters

- ECOM100#: this is a logical number associated with this specific ECOM100 module in the specified slot. All other ECxxxx IBoxes that need to reference this ECOM100 module must reference this logical number
- Workspace: specifies a V-memory location that will be used by the instruction
- Success: specifies a bit that will turn on once the request is completed successfully
- Error: specifies a bit that will turn on if the instruction is not successfully completed
- Error Code: specifies the location where the Error Code will be written
- IP Address: specifies the IP Address that will be written to the module

Parameter	DL05 Range
ECOM100# ..... K	K0-255
Workspace V	See DL05 V-memory map - Data Words
Success ..... X,Y,C,GX,GY,B	See DL05 V-memory map
Error ..... X,Y,C,GX,GY,B	See DL05 V-memory map
Error Code V	See DL05 V-memory map - Data Words
IP Address	0.0.0.1. to 255.255.255.254

ECWRIP Example

Rung 1: The ECOM100 Config IBox is responsible for coordination/interlocking of all ECOM100 type IBoxes for one specific ECOM100 module. Tag the ECOM100 in slot 1 as ECOM100# K0. All other ECxxxx IBoxes refer to this module # as K0. If you need to move the module in the base to a different slot, then you only need to change this one IBox. V400 is used as a global result status register for the other ECxxxx IBoxes using this specific ECOM100 module. V401 is used to coordinate/interlock the logic in all of the other ECxxxx IBoxes using this specific ECOM100 module. V402-V502 is a common 130 byte buffer available for use by the other ECxxxx IBoxes using this specific ECOM100 module.

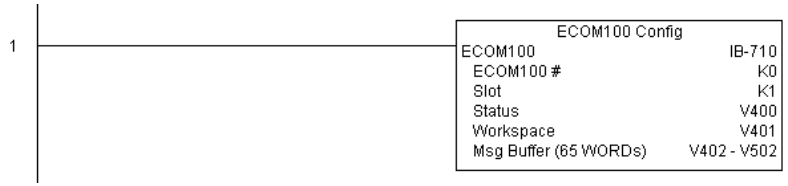

Rung 2: On the 2nd scan, assign the IP Address of the ECOM100 to 192.168.12.100

The ECWRIP is leading edge triggered, not power-flow driven (similar to a counter input leg). The command to write the IP Address will be sent to the ECOM100 whenever the power flow into the IBox goes from OFF to ON.

If successful, turn on C100. If there is a failure, turn on C101. If it fails, you can look at V2000 for the specific error code.

To configure all of the ECOM100 TCP/IP parameters in one IBox, see the ECOM100 IP Setup (ECIPSUP) IBox.

ECOM100 Write Module ID (ECWRMID) (IB-721)

DS5	Used
HPP	N/A

ECOM100 Write Module ID will write the given Module ID on a leading edge transition to the IBox

If the Module ID is set in the hardware using the dipswitches, this IBox will fail and return error code 1005 (decimal).

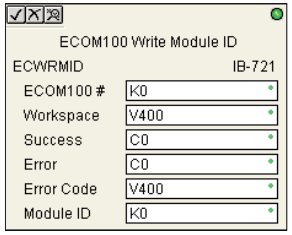

The Workspace parameter is an internal, private register used by this IBox and MUST BE UNIQUE in this one instruction and MUST NOT be used anywhere else in your program.

Either the Success or Error bit parameter will turn on once the command is complete. If there is an error, the Error Code parameter will report an ECOM100 error code (less than 100), or a PLC logic error (greater than 1000).

The Module ID is stored in Flash-ROM in the ECOM100 and the execution of this IBox will disable the ECOM100 module for at least a half second until it writes the Flash-ROM. Therefore, it is HIGHLY RECOMMENDED that you only execute this IBox ONCE on second scan. Since it requires a LEADING edge to execute, use a NORMALLY CLOSED SP0 (STR NOT First Scan) to drive the power flow to the IBox.

In order for this ECOM100 IBox to function, you must turn ON dip switch 7 on the ECOM100 circuit board.

ECWRMID Parameters

- ECOM100#: this is a logical number associated with this specific ECOM100 module in the specified slot. All other ECxxxx IBoxes that need to reference this ECOM100 module must reference this logical number
- Workspace: specifies a V-memory location that will be used by the instruction
- Success: specifies a bit that will turn on once the request is completed successfully
- Error: specifies a bit that will turn on if the instruction is not successfully completed
- Error Code: specifies the location where the Error Code will be written
- Module ID: specifies the Module ID that will be written to the module

Parameter	DL05 Range
ECOM100# ..... K	K0-255
Workspace V	See DL05 V-memory map - Data Words
Success ..... X,Y,C,GX,GY,B	See DL05 V-memory map
Error ..... X,Y,C,GX,GY,B	See DL05 V-memory map
Error Code V	See DL05 V-memory map - Data Words
Module ID	K0-65535

ECWRMID Example

Rung 1: The ECOM100 Config IBox is responsible for coordination/interlocking of all ECOM100 type IBoxes for one specific ECOM100 module. Tag the ECOM100 in slot 1 as ECOM100# K0. All other ECxxxx IBoxes refer to this module # as K0. If you need to move the module in the base to a different slot, then you only need to change this one IBox. V400 is used as a global result status register for the other ECxxxx IBoxes using this specific ECOM100 module. V401 is used to coordinate/interlock the logic in all of the other ECxxxx IBoxes using this specific ECOM100 module. V402-V502 is a common 130 byte buffer available for use by the other ECxxxx IBoxes using this specific ECOM100 module.

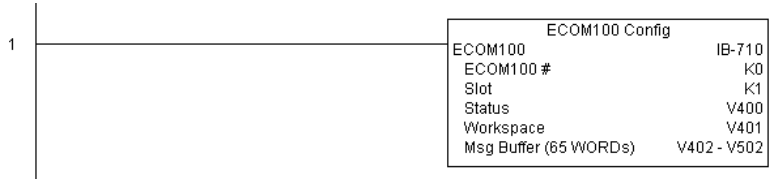

Rung 2: On the 2nd scan, set the Module ID of the ECOM100. Typically this is done using NetEdit, but this IBox allows you to configure the module ID of the ECOM100 using your ladder program.

The EWRMID is leading edge triggered, not power-flow driven (similar to a counter input leg). The command to write the module ID will be sent to the ECOM100 whenever the power flow into the IBox goes from OFF to ON.

If successful, turn on C100. If there is a failure, turn on C101. If it fails, you can look at V2000 for the specific error code.

ECOM100 Write Name (ECWRNAM) (IB-725)

DS5	Used
HPP	N/A

ECOM100 Write Name will write the given Name to the ECOM100 module on a leading edge transition to the IBox. If you use a dollar sign ($) or double quote ("), use the PRINT/VPRINT escape sequence of TWO dollar signs ($$) for a single dollar sign or dollar sign-double quote ($") for a double quote character.

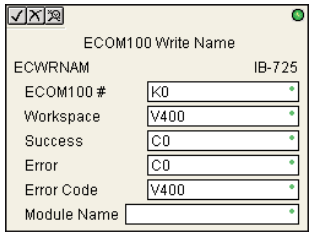

The Workspace parameter is an internal, private register used by this IBox and MUST BE UNIQUE in this one instruction and MUST NOT be used anywhere else in your program.

Either the Success or Error bit parameter will turn on once the command is complete. If there is an error, the Error Code parameter will report an ECOM100 error code (less than 100), or a PLC logic error (greater than 1000).

The Name is stored in Flash-ROM in the ECOM100 and the execution of this IBox will disable the ECOM100 module for at least a half second until it writes the Flash-ROM. Therefore, it is HIGHLY RECOMMENDED that you only execute this IBox ONCE on second scan. Since it requires a LEADING edge to execute, use a NORMALLY CLOSED SP0 (STR NOT First Scan) to drive the power flow to the IBox.

In order for this ECOM100 IBox to function, you must turn ON dip switch 7 on the ECOM100 circuit board.

ECWRNAM Parameters

- ECOM100#: this is a logical number associated with this specific ECOM100 module in the specified slot. All other ECxxxx IBoxes that need to reference this ECOM100 module must reference this logical number
- Workspace: specifies a V-memory location that will be used by the instruction
- Success: specifies a bit that will turn on once the request is completed successfully
- Error: specifies a bit that will turn on if the instruction is not successfully completed
- Error Code: specifies the location where the Error Code will be written
- Module Name: specifies the Name that will be written to the module

Parameter	DL05 Range
ECOM100# ..... K	K0-255
Workspace V	See DL05 V-memory map - Data Words
Success ..... X,Y,C,GX,GY,B	See DL05 V-memory map
Error ..... X,Y,C,GX,GY,B	See DL05 V-memory map
Error Code V	See DL05 V-memory map - Data Words
Module Name	Text

ECWRNAM Example

Rung 1: The ECOM100 Config IBox is responsible for coordination/interlocking of all ECOM100 type IBoxes for one specific ECOM100 module. Tag the ECOM100 in slot 1 as ECOM100# K0. All other ECxxxx IBoxes refer to this module # as K0. If you need to move the module in the base to a different slot, then you only need to change this one IBox. V400 is used as a global result status register for the other ECxxxx IBoxes using this specific ECOM100 module. V401 is used to coordinate/interlock the logic in all of the other ECxxxx IBoxes using this specific ECOM100 module. V402-V502 is a common 130 byte buffer available for use by the other ECxxxx IBoxes using this specific ECOM100 module.

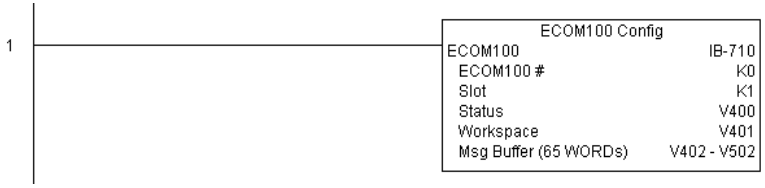

Rung 2: On the 2nd scan, set the Module Name of the ECOM100. Typically this is done using NetEdit, but this IBox allows you to configure the module name of the ECOM100 using your ladder program.

The EWRNAM is leading edge triggered, not power-flow driven (similar to a counter input leg). The command to write the module name will be sent to the ECOM100 whenever the power flow into the IBox goes from OFF to ON.

If successful, turn on C100. If there is a failure, turn on C101. If it fails, you can look at V2000 for the specific error code.

ECOM100 Write Subnet Mask (ECWRSNM) (IB-733)

DS5	Used
HPP	N/A

ECOM100 Write Subnet Mask will write the given Subnet Mask to the ECOM100 module on a leading edge transition to the IBox. See also ECOM100 IP Setup (ECIPSUP) IBox 717 to setup ALL of the TCP/IP parameters in a single instruction - IP Address, Subnet Mask, and Gateway Address.

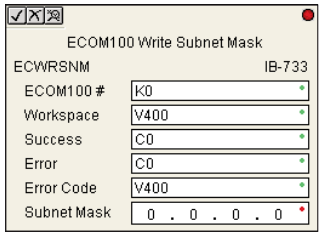

The Workspace parameter is an internal, private register used by this IBox and MUST BE UNIQUE in this one instruction and MUST NOT be used anywhere else in your program.

Either the Success or Error bit parameter will turn on once the command is complete. If there is an error, the Error Code parameter will report an ECOM100 error code (less than 100), or a PLC logic error (greater than 1000).

The Subnet Mask is stored in Flash-ROM in the ECOM100 and the execution of this IBox will disable the ECOM100 module for at least a half second until it writes the Flash-ROM. Therefore, it is HIGHLY RECOMMENDED that you only execute this IBox ONCE on second scan. Since it requires a LEADING edge to execute, use a NORMALLY CLOSED SP0 (STR NOT First Scan) to drive the power flow to the IBox.

In order for this ECOM100 IBox to function, you must turn ON dip switch 7 on the ECOM100 circuit board.

ECWRSNM Parameters

- ECOM100#: this is a logical number associated with this specific ECOM100 module in the specified slot. All other ECxxxx IBoxes that need to reference this ECOM100 module must reference this logical number
- Workspace: specifies a V-memory location that will be used by the instruction
- Success: specifies a bit that will turn on once the request is completed successfully
- Error: specifies a bit that will turn on if the instruction is not successfully completed
- Error Code: specifies the location where the Error Code will be written
- Subnet Mask: specifies the Subnet Mask that will be written to the module

Parameter	DL05 Range
ECOM100# ..... K	K0-255
Workspace V	See DL05 V-memory map - Data Words
Success ..... X,Y,C,GX,GY,B	See DL05 V-memory map
Error ..... X,Y,C,GX,GY,B	See DL05 V-memory map
Error Code V	See DL05 V-memory map - Data Words
Subnet Mask	Masked IP Address

ECWRSNM Example

Rung 1: The ECOM100 Config IBox is responsible for coordination/interlocking of all ECOM100 type IBoxes for one specific ECOM100 module. Tag the ECOM100 in slot 1 as ECOM100# K0. All other ECxxxx IBoxes refer to this module # as K0. If you need to move the module in the base to a different slot, then you only need to change this one IBox. V400 is used as a global result status register for the other ECxxxx IBoxes using this specific ECOM100 module. V401 is used to coordinate/interlock the logic in all of the other ECxxxx IBoxes using this specific ECOM100 module. V402-V502 is a common 130 byte buffer available for use by the other ECxxxx IBoxes using this specific ECOM100 module.

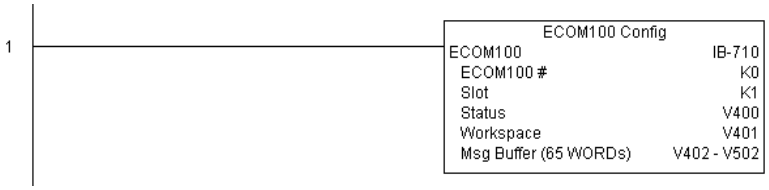

Rung 2: On the 2nd scan, assign the Subnet Mask of the ECOM100 to 255.255.0.0

The ECWRSNM is leading edge triggered, not power-flow driven (similar to a counter input leg). The command to write the Subnet Mask will be sent to the ECOM100 whenever the power flow into the IBox goes from OFF to ON.

If successful, turn on C100. If there is a failure, turn on C101. If it fails, you can look at V2000 for the specific error code.

To configure all of the ECOM100 TCP/IP parameters in one IBox, see the ECOM100 IP Setup (ECIPSUP) IBox.

ECOM100 RX Network Read (ECRX) (IB-740)

DS5	Used
HPP	N/A

ECOM100 RX Network Read performs the RX instruction with built-in interlocking with all other ECOM100 RX (ECRX) and ECOM100 WX (ECWX) IBoxes in your program to simplify communications networking. It will perform the RX on the specified ECOM100#'s network, which corresponds to a specific unique ECOM100 Configuration (ECOM100) IBox at the top of your program.

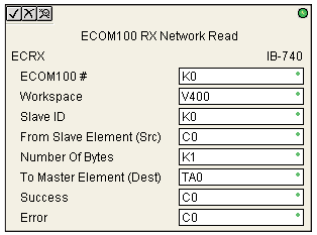

The Workspace parameter is an internal, private register used by this IBox and MUST BE UNIQUE in this one instruction and MUST NOT be used anywhere else in your program.

Whenever this IBox has power, it will read element data from the specified slave into the given destination V-memory buffer, giving other ECOM100 RX and ECOM100 WX IBoxes on that ECOM100# network a chance to execute.

For example, if you wish to read and write data continuously from 5 different slaves, you can have all of these ECRX and ECWX instructions in ONE RUNG driven by SP1 (Always On). They will execute round-robin style, automatically.

ECRX Parameters

- ECOM100#: this is a logical number associated with this specific ECOM100 module in the specified slot. All other ECxxxx IBoxes that need to reference this ECOM100 module must reference this logical number
- Workspace: specifies a V-memory location that will be used by the instruction
- Slave ID: specifies the slave ECOM(100) PLC that will be targeted by the ECRX instruction
- From Slave Element (Src): specifies the slave address of the data to be read
- Number of Bytes: specifies the number of bytes to read from the slave ECOM(100) PLC
- To Master Element (Dest): specifies the location where the slave data will be placed in the master ECOM100 PLC
- Success: specifies a bit that will turn on once the request is completed successfully
- Error: specifies a bit that will turn on if the instruction is not successfully completed

Parameter	DL05 Range
ECOM100# ..... K	K0-255
Workspace V	See DL05 V-memory map - Data Words
Slave ID ..... K	K0-90
From Slave Element (Src) X,Y,C,S,T,CT,GX,GY,V,P	See DL05 V-memory map
Number of Bytes ..... K	K1-128
To Master Element (Dest) V	See DL05 V-memory map - Data Words
Success ..... X,Y,C,GX,GY,B	See DL05 V-memory map
Error ..... X,Y,C,GX,GY,B	See DL05 V-memory map

ECRX Example

Rung 1: The ECOM100 Config IBox is responsible for coordination/interlocking of all ECOM100 type IBoxes for one specific ECOM100 module. Tag the ECOM100 in slot 1 as ECOM100# K0. All other ECxxxx IBoxes refer to this module # as K0. If you need to move the module in the base to a different slot, then you only need to change this one IBox. V400 is used as a global result status register for the other ECxxxx IBoxes using this specific ECOM100 module. V401 is used to coordinate/interlock the logic in all of the other ECxxxx IBoxes using this specific ECOM100 module. V402-V502 is a common 130 byte buffer available for use by the other ECxxxx IBoxes using this specific ECOM100 module.

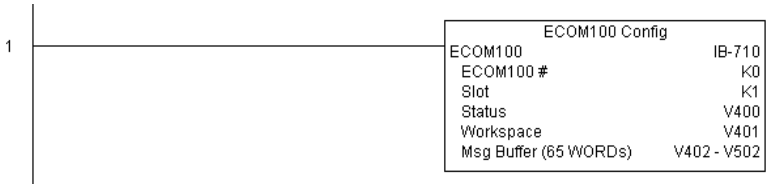

(example continued on next page)

ECRX Example (cont'd)

Rung 2: Using ECOM100# K0, read X0-X7 from Slave K7 and write them to slave K5 as fast as possible. Store them in this local PLC in C200-C207, and write them to C300-C307 in slave K5.

Both the ECRX and ECWX work with the ECOM100 Config IBox to simplify all networking by handling all of the interlocks and proper resource sharing. They also provide very simplified error reporting. You no longer need to worry about any SP "busy bits" or "error bits", or what slot number a module is in, or have any counters or shift registers or any other interlocks for resource management.

In this example, SP1 (always ON) is driving both the ECRX and ECWX IBoxes in the same rung. On the scan that the Network Read completes, the Network Write will start that same scan. As soon as the Network Write completes, any pending operations below it in the program would get a turn. If there are no pending ECOM100 IBoxes below the ECWX, then the very next scan the ECRX would start its request again.

Using the ECRX and ECWX for all of your ECOM100 network reads and writes is the fastest the PLC can do networking. For local Serial Ports, DCM modules, or the original ECOM modules, use the NETCFG and NETRX/NETWX IBoxes.

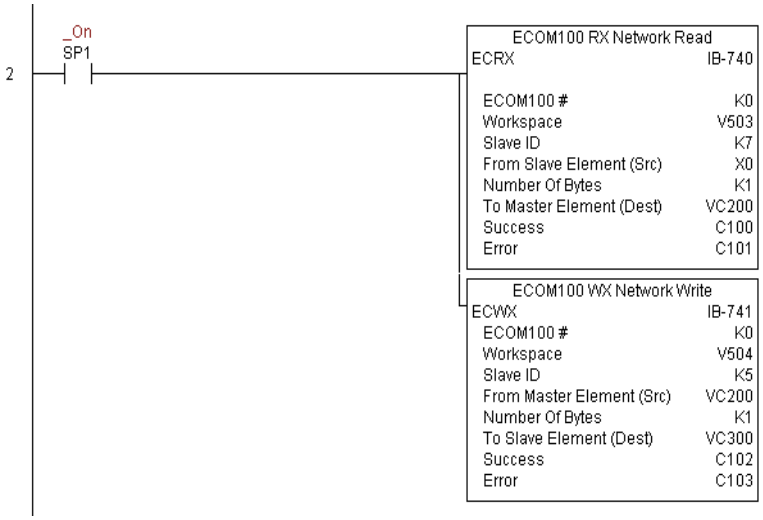

ECOM100 WX Network Write(ECWX) (IB-741)

DS5	Used
HPP	N/A

ECOM100 WX Network Write performs the WX instruction with built-in interlocking with all other ECOM100 RX (ECRX) and ECOM100 WX (ECWX) IBoxes in your program to simplify communications networking. It will perform the WX on the specified ECOM100#'s network, which corresponds to a specific unique ECOM100 Configuration (ECOM100) IBox at the top of your program.

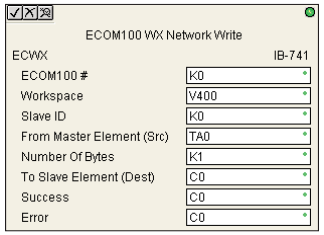

The Workspace parameter is an internal, private register used by this IBox and MUST BE UNIQUE in this one instruction and MUST NOT be used anywhere else in your program.

Whenever this IBox has power, it will write data from the master's V-memory buffer to the specified slave starting with the given slave element, giving other ECOM100 RX and ECOM100 WX IBoxes on that ECOM100# network a chance to execute.

For example, if you wish to read and write data continuously from 5 different slaves, you can have all of these ECRX and ECWX instructions in ONE RUNG driven by SP1 (Always On). They will execute round-robin style, automatically.

ECWX Parameters

- ECOM100#: this is a logical number associated with this specific ECOM100 module in the specified slot. All other ECxxxx IBoxes that need to reference this ECOM100 module must reference this logical number
- Workspace: specifies a V-memory location that will be used by the instruction
- Slave ID: specifies the slave ECOM(100) PLC that will be targeted by the ECWX instruction
- From Master Element (Src): specifies the location in the master ECOM100 PLC where the data will be sourced from
- Number of Bytes: specifies the number of bytes to write to the slave ECOM(100) PLC
- To Slave Element (Dest): specifies the slave address the data will be written to
- Success: specifies a bit that will turn on once the request is completed successfully
- Error: specifies a bit that will turn on if the instruction is not successfully completed

Parameter	DL05 Range
ECOM100# ..... K	K0-255
Workspace V	See DL05 V-memory map - Data Words
Slave ID ..... K	K0-90
From Master Element (Src) V	See DL05 V-memory map - Data Words
Number of Bytes ..... K	K1-128
To Slave Element (Dest) X,Y,C,S,T,CT,GX,GY,V,P	See DL05 V-memory map
Success ..... X,Y,C,GX,GY,B	See DL05 V-memory map
Error ..... X,Y,C,GX,GY,B	See DL05 V-memory map

ECWX Example

Rung 1: The ECOM100 Config IBox is responsible for coordination/interlocking of all ECOM100 type IBoxes for one specific ECOM100 module. Tag the ECOM100 in slot 1 as ECOM100# K0. All other ECxxxx IBoxes refer to this module # as K0. If you need to move the module in the base to a different slot, then you only need to change this one IBox. V400 is used as a global result status register for the other ECxxxx IBoxes using this specific ECOM100 module. V401 is used to coordinate/interlock the logic in all of the other ECxxxx IBoxes using this specific ECOM100 module. V402-V502 is a common 130 byte buffer available for use by the other ECxxxx IBoxes using this specific ECOM100 module.

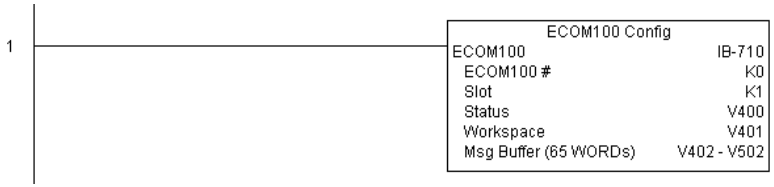

ECWX Example

Rung 2: Using ECOM100# K0, read X0-X7 from Slave K7 and write them to slave K5 as fast as possible. Store them in this local PLC in C200-C207, and write them to C300-C307 in slave K5.

Both the ECRX and ECWX work with the ECOM100 Config IBox to simplify all networking by handling all of the interlocks and proper resource sharing. They also provide very simplified error reporting. You no longer need to worry about any SP "busy bits" or "error bits", or what slot number a module is in, or have any counters or shift registers or any other interlocks for resource management.

In this example, SP1 (always ON) is driving both the ECRX and ECWX IBoxes in the same rung. On the scan that the Network Read completes, the Network Write will start that same scan. As soon as the Network Write completes, any pending operations below it in the program would get a turn. If there are no pending ECOM100 IBoxes below the ECWX, then the very next scan the ECRX would start its request again.

Using the ECRX and ECWX for all of your ECOM100 network reads and writes is the fastest the PLC can do networking. For local Serial Ports, DCM modules, or the original ECOM modules, use the NETCFG and NETRX/NETWX IBoxes.

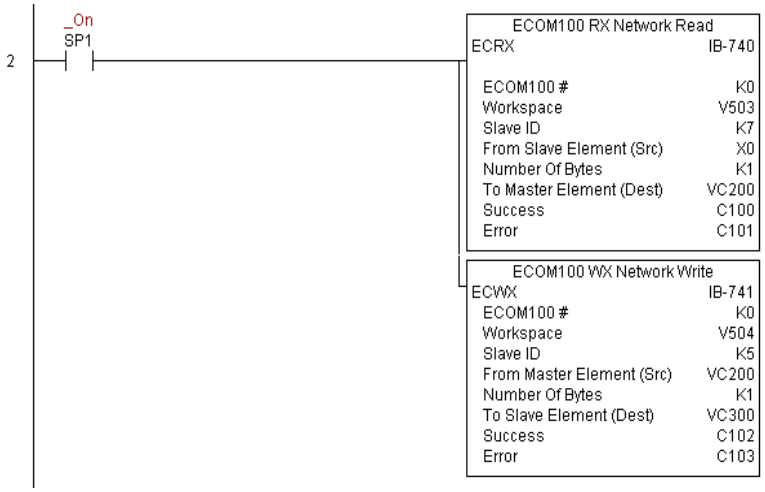

NETCFG Network Configuration (NETCFG) (IB-700)

DS5	Used
HPP	N/A

Network Config defines all the common information necessary for performing RX/WX Networking using the NETRX and NETWX IBox instructions via a local CPU serial port, DCM or ECOM module.

You must have the Network Config instruction at the top of your ladder/stage program with any other configuration IBoxes.

If you use more than one local serial port, DCM or ECOM in your PLC for RX/WX Networking, you must have a different Network Config instruction for EACH RX/WX network in your system that utilizes any NETRX/NETWX IBox instructions.

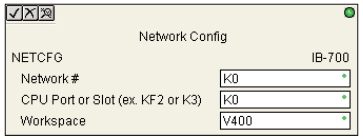

The Workspace parameter is an internal, private register used by the Network Config IBox and MUST BE UNIQUE in this one instruction and MUST NOT be used anywhere else in your program.

The 2nd parameter "CPU Port or Slot" is the same value as in the high byte of the first LD instruction if you were coding the RX or WX rung yourself. This value is CPU and port specific (check your PLC manual). Use KF2 for the DL05 CPU serial port 2. If using a DCM or ECOM module, use K1 for slot 1.

NETCFG Parameters

- Network#: specifies a unique # for each ECOM(100) or DCM network to use
- CPU Port or Slot: specifies the CPU port number or slot number of DCM/ECOM(100) used
- Workspace: specifies a V-memory location that will be used by the instruction

Parameter	DL05 Range
Network# ..... K	K0-255
CPU Port or Slot ..... K	K0-FF
Workspace V	See DL05 V-memory map - Data Words

NETCFG Example

The Network Configuration IBox coordinates all of the interaction with other Network IBoxes (NETRX/NETWX). You must have a Network Configuration IBox for each serial port network, DCM module network, or original ECOM module network in your system. Configuration IBoxes must be at the top of your program and must execute every scan.

This IBox defines Network# K0 to be for the local CPU serial port #2 (KF2). For local CPU serial ports or DCM/ECOM modules, use the same value you would use in the most significant byte of the first LD instruction in a normal RX/WX rung to reference the port or module. Any NETRX or NETWX IBoxes that need to reference this specific network would enter K0 for their Network# parameter.

The Workspace register is used to maintain state information about the port or module, along with proper sharing and interlocking with the other NETRX and NETWX IBoxes in the program. This V-memory register must not be used anywhere else in the entire program.

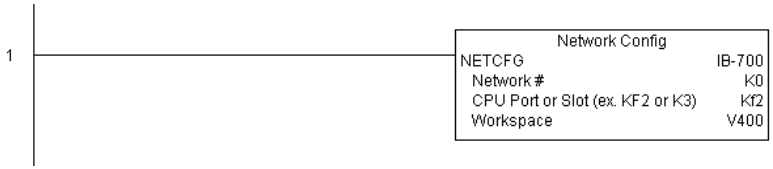

Network RX Read (NETRX) (IB-701)

DS5	Used
HPP	N/A

Network RX Read performs the RX instruction with built-in interlocking with all other Network RX (NETRX) and Network WX (NETWX) IBoxes in your program to simplify communications networking. It will perform the RX on the specified Network #, which corresponds to a specific unique Network Configuration (NETCFG) at the top of your program.

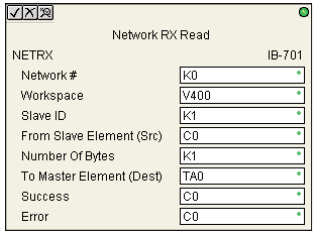

The Workspace parameter is an internal, private register used by this IBox and MUST BE UNIQUE in this one instruction and MUST NOT be used anywhere else in your program.

Whenever this IBox has power, it will read element data from the specified slave into the given destination V-memory buffer, giving other Network RX and Network WX IBoxes on that Network # a chance to execute.

For example, if you wish to read and write data continuously from 5 different slaves, you can have all of these NETRX and NETWX instructions in ONE RUNG driven by SP1 (Always On). They will execute round-robin style, automatically.

NETRX Parameters

- Network#: specifies the (CPU port's, DCM's, ECOM's) Network # defined by the NETCFG instruction
- Workspace: specifies a V-memory location that will be used by the instruction
- Slave ID: specifies the slave PLC that will be targeted by the NETRX instruction
- From Slave Element (Src): specifies the slave address of the data to be read
- Number of Bytes: specifies the number of bytes to read from the slave device
- To Master Element (Dest): specifies the location where the slave data will be placed in the master PLC
- Success: specifies a bit that will turn on once the request is completed successfully
- Error: specifies a bit that will turn on if the instruction is not successfully completed

Parameter	DL05 Range
Network# ..... K	K0-255
Workspace V	See DL05 V-memory map - Data Words
Slave ID ..... K	K0-90
From Slave Element (Src) X,Y,C,S,T,CT,GX,GY,V,P	See DL05 V-memory map
Number of Bytes ..... K	K1-128
To Master Element (Dest) V	See DL05 V-memory map - Data Words
Success ..... X,Y,C,GX,GY,B	See DL05 V-memory map
Error ..... X,Y,C,GX,GY,B	See DL05 V-memory map

NETRX Example

Rung 1: The Network Configuration IBox coordinates all of the interaction with other Network IBoxes (NETRX/NETWX). You must have a Network Configuration IBox for each serial port network, DCM module network, or original ECOM module network in your system. Configuration IBoxes must be at the top of your program and must execute every scan.

This IBox defines Network# K0 to be for the local CPU serial port #2 (KF2). For local CPU serial ports or DCM/ECOM modules, use the same value you would use in the most significant byte of the first LD instruction in a normal RX/WX rung to reference the port or module. Any NETRX or NETWX IBoxes that need to reference this specific network would enter K0 for their Network# parameter.

The Workspace register is used to maintain state information about the port or module, along with proper sharing and interlocking with the other NETRX and NETWX IBoxes in the program. This V-memory register must not be used anywhere else in the entire program.

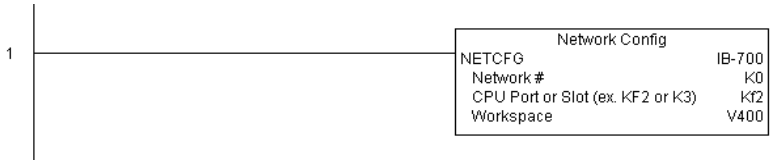

(example continued on next page)

NETRX Example (cont'd)

Rung 2: Using Network# K0, read X0-X7 from Slave K7 and write them to slave K5 as fast as possible. Store them in this local PLC in C200-C207, and write them to C300-C307 in slave K5.

Both the NETRX and NETWX work with the Network Config IBox to simplify all networking by handling all of the interlocks and proper resource sharing. They also provide very simplified error reporting. You no longer need to worry about any SP "busy bits" or "error bits", or what port number or slot number a module is in, or have any counters or shift registers or any other interlocks for resource management.

In this example, SP1 (always ON) is driving both the NETRX and NETWX IBoxes in the same rung. On the scan that the Network Read completes, the Network Write will start that same scan. As soon as the Network Write completes, any pending operations below it in the program would get a turn. If there are no pending NETRX or NETWX IBoxes below this IBox, then the very next scan the NETRX would start its request again.

Using the NETRX and NETWX for all of your serial port, DCM, or original ECOM network reads and writes is the fastest the PLC can do networking. For ECOM100 modules, use the ECOM100 and ECRX/ECWX IBoxes.

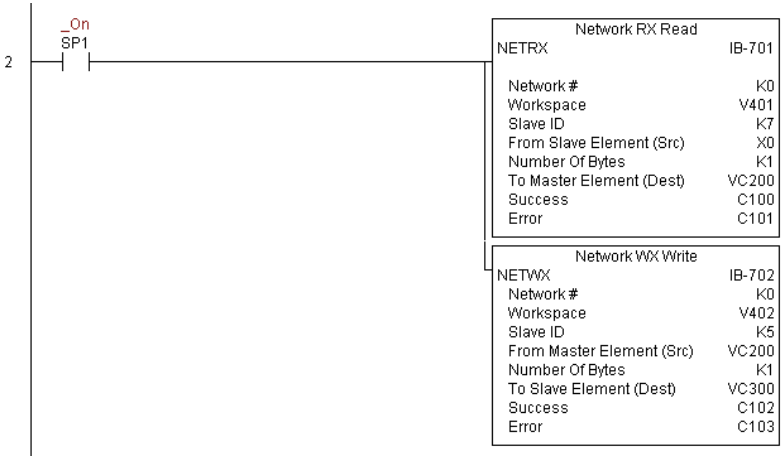

Network WX Write (NETWX) (IB-702)

DS5	Used
HPP	N/A

Network WX Write performs the WX instruction with built-in interlocking with all other Network RX (NETRX) and Network WX (NETWX) IBoxes in your program to simplify communications networking. It will perform the WX on the specified Network #, which corresponds to a specific unique Network Configuration (NETCFG) at the top of your program.

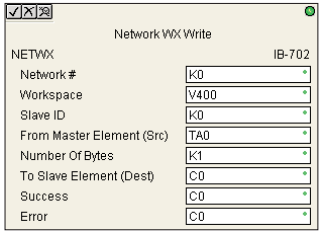

The Workspace parameter is an internal, private register used by this IBox and MUST BE UNIQUE in this one instruction and MUST NOT be used anywhere else in your program.

Whenever this IBox has power, it will write data from the master's V-memory buffer to the specified slave starting with the given slave element, giving other Network RX and Network WX IBoxes on that Network # a chance to execute.

For example, if you wish to read and write data continuously from 5 different slaves, you can have all of these NETRX and NETWX instructions in ONE RUNG driven by SP1 (Always On). They will execute round-robin style, automatically.

NETWX Parameters

- Network#: specifies the (CPU port's, DCM's, ECOM's) Network # defined by the NETCFG instruction
- Workspace: specifies a V-memory location that will be used by the instruction
- Slave ID: specifies the slave PLC that will be targeted by the NETWX instruction
- From Master Element (Src): specifies the location in the master PLC where the data will be sourced from
- Number of Bytes: specifies the number of bytes to write to the slave PLC
- To Slave Element (Dest): specifies the slave address the data will be written to
- Success: specifies a bit that will turn on once the request is completed successfully
- Error: specifies a bit that will turn on if the instruction is not successfully completed

Parameter	DL05 Range
Network# ..... K	K0-255
Workspace V	See DL05 V-memory map - Data Words
Slave ID ..... K	K0-90
From Master Element (Src) V	See DL05 V-memory map - Data Words
Number of Bytes ..... K	K1-128
To Slave Element (Dest) X,Y,C,S,T,CT,GX,GY,V,P	See DL05 V-memory map
Success ..... X,Y,C,GX,GY,B	See DL05 V-memory map
Error ..... X,Y,C,GX,GY,B	See DL05 V-memory map

NETWX Example

Rung 1: The Network Configuration IBox coordinates all of the interaction with other Network IBoxes (NETRX/NETWX). You must have a Network Configuration IBox for each serial port network, DCM module network, or original ECOM module network in your system. Configuration IBoxes must be at the top of your program and must execute every scan.

This IBox defines Network# K0 to be for the local CPU serial port #2 (KF2). For local CPU serial ports or DCM/ECOM modules, use the same value you would use in the most significant byte of the first LD instruction in a normal RX/WX rung to reference the port or module. Any NETRX or NETWX IBoxes that need to reference this specific network would enter K0 for their Network# parameter.

The Workspace register is used to maintain state information about the port or module, along with proper sharing and interlocking with the other NETRX and NETWX IBoxes in the program. This V-memory register must not be used anywhere else in the entire program.

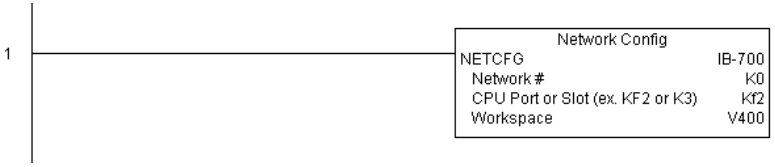

NETWX Example

Rung 2: Using Network# K0, read X0-X7 from Slave K7 and write them to slave K5 as fast as possible. Store them in this local PLC in C200-C207, and write them to C300-C307 in slave K5.

Both the NETRX and NETWX work with the Network Config IBox to simplify all networking by handling all of the interlocks and proper resource sharing. They also provide very simplified error reporting. You no longer need to worry about any SP "busy bits" or "error bits", or what port number or slot number a module is in, or have any counters or shift registers or any other interlocks for resource management.

In this example, SP1 (always ON) is driving both the NETRX and NETWX IBoxes in the same rung. On the scan that the Network Read completes, the Network Write will start that same scan. As soon as the Network Write completes, any pending operations below it in the program would get a turn. If there are no pending NETRX or NETWX IBoxes below this IBox, then the very next scan the NETRX would start its request again.

Using the NETRX and NETWX for all of your serial port, DCM, or original ECOM network reads and writes is the fastest the PLC can do networking. For ECOM100 modules, use the ECOM100 and ECRX/ECWX IBoxes.

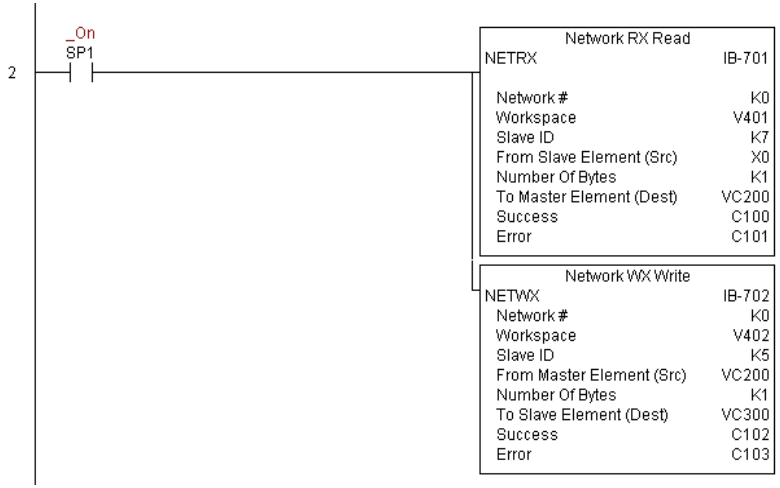

CTRIO Configuration (CTRIO) (IB-1000)

DS5	Used
HPP	N/A

CTRIO Config defines all the common information for one specific CTRIO module which is used by the other CTRIO IBox instructions (for example, CTRLDPR - CTRIO Load Profile, CTREDRL - CTRIO Edit and Reload Preset Table, CTRRTLM - CTRIO Run to Limit Mode, ...).

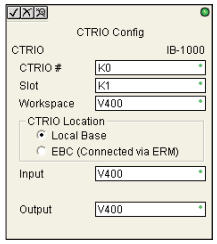

The Input/Output parameters for this instruction can be copied directly from the CTRIO Workbench configuration for this CTRIO module. Since the behavior is slightly different when the CTRIO module is in an EBC Base via an ERM, you must specify whether the CTRIO module is in a local base or in an EBC base. The DL05 PLC only supports local base operation at this time.

You must have the CTRIO Config IBox at the top of your ladder/stage program along with any other configuration IBoxes.

If you have more than one CTRIO in your PLC, you must have a different CTRIO Config IBox for EACH CTRIO module in your system that utilizes any CTRIO IBox instructions. Each CTRIO Config IBox must have a UNIQUE CTRIO# value. This is how the CTRIO IBoxes differentiate between the different CTRIO modules in your system.

The Workspace parameter is an internal, private register used by the CTRIO Config IBox and MUST BE UNIQUE in this one instruction and MUST NOT be used anywhere else in your program.

CTRIO Parameters

- CTRIO#: specifies a specific CTRIO module based on a user defined number
- Slot: specifies the single PLC option slot the CTRIO module occupies
- Workspace: specifies a V-memory location that will be used by the instruction
- CTRIO Location: specifies where the module is located (local base only for DL05)
- Input: This needs to be set to the same V-memory register as is specified in CTRIO Workbench as 'Starting V address for inputs' for this unique CTRIO.
- Output: This needs to be set to the same V-memory register as is specified in CTRIO Workbench as 'Starting V address for outputs' for this unique CTRIO.

Parameter	DL05 Range
CTRIO# ..... K	K0-255
Slot ..... K	K1
Workspace V	See DL05 V-memory map - Data Words
Input V	See DL05 V-memory map - Data Words
Output V	See DL05 V-memory map - Data Words

CTRIO Example

Rung 1: This sets up the CTRIO card in slot 2 of the local base. Each CTRIO in the system will need a separate CTRIO I-box before any CTRxxxx I-boxes can be used for them. The CTRIO has been configured to use V2000 through V2025 for its input data, and V2030 through V2061 for its output data.

CTRIO Add Entry to End of Preset Table (CTRADPT) (IB-1005)

DS5	Used
HPP	N/A

CTRIO Add Entry to End of Preset Table, on a leading edge transition to this IBox, will append an entry to the end of a memory based Preset Table on a specific CTRIO Output resource. This IBox will take more than 1 PLC scan to execute. Either the Success or Error bit will turn on when the command is complete. If the Error Bit is on, you can use the CTRIO Read Error Code (CTRRDER) IBox to get extended error information.

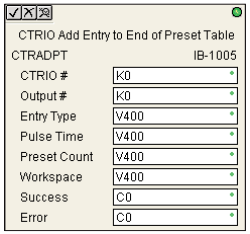

Entry Type:

K0: Set

K1: Reset

K2: Pulse On (uses Pulse Time)

K3: Pulse Off (uses Pulse Time)

K4: Toggle

K5: Reset Count

Note that the Pulse Time parameter is ignored by some Entry Types.

The Workspace register is for internal use by this IBox instruction and MUST NOT be used anywhere else in your program.

CTRAPT Parameters

- CTRIO#: specifies a specific CTRIO module based on a user defined number (see CTRIO Config)
- Output#: specifies a CTRIO output to be used by the instruction
- Entry Type: specifies the Entry Type to be added to the end of a Preset Table
- Pulse Time: specifies a pulse time for the Pulse On and Pulse Off Entry Types
- Preset Count: specifies an initial count value to begin at after Reset
- Workspace: specifies a V-memory location that will be used by the instruction
- Success: specifies a bit that will turn on once the instruction has successfully completed
- Error: specifies a bit that will turn on if the instruction does not complete successfully

Parameter	DL05 Range
CTRIO# ..... K	K0-255
Output# ..... K	K0-3
Entry Type ..... V,K	K0-5; See DL05 V-memory map - Data Words
Pulse Time ..... V,K	K0-65535; See DL05 V-memory map - Data Words
Preset Count ..... V,K	K0-2147434528; See DL05 V-memory map
Workspace V	See DL05 V-memory map - Data Words
Success ..... X,Y,C,GX,GY,B	See DL05 V-memory map
Error ..... X,Y,C,GX,GY,B	See DL05 V-memory map

CTRADPT Example

Rung 1: This sets up the CTRIO card in slot 2 of the local base. Each CTRIO in the system will need a separate CTRIO I-box before any CTRxxxx I-boxes can be used for them. The CTRIO has been configured to use V2000 through V2025 for its input data, and V2030 through V2061 for its output data.

Rung 2: This rung is a sample method for enabling the CTRADPT command. A C-bit is used to allow the programmer to control the command from Data View for testing purposes.

Turning on C0 will cause the CTRADPT instruction to add a new preset to the preset table for output #0 on the CTRIO in slot 2. The new preset will be a command to RESET (entry type K1=reset), pulse time is left at zero as the reset type does not use this, and the count at which it will reset will be 20.

Operating procedure for this example code is to load the CTRADPT_ex1.cwb file to your CTRIO, then enter the code shown here, change to RUN mode, enable output #0 by turning on C2 in dataview, turn encoder on CTRIO to value above 10 and output #0 light will come on and stay on for all counts past 10. Now reset the counter with C1, enable C0 to execute CTRADPT command to add a reset for output #0 at a count of 20, turn on C2 to enable output #0, then turn encoder to value of 10+ (output #0 should turn on) and then continue on to count of 20+ (output #0 should turn off).

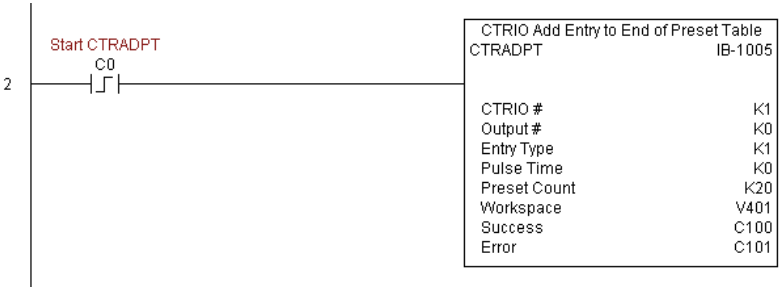

(example continued on next page)

CTRADPT Example (cont'd)

Rung 3: This rung allows the programmer to reset the counter from the ladder logic.

Rung 4: This rung allows the operator to enable output #0 from the ladder code.

CTRIO Clear Preset Table (CTRCLRT) (IB-1007)

DS5	Used
HPP	N/A

CTRIO Clear Preset Table will clear the RAM based Preset Table on a leading edge transition to this IBox. This IBox will take more than 1 PLC scan to execute. Either the Success or Error bit will turn on when the command is complete. If the Error Bit is on, you can use the CTRIO Read Error Code (CTRRDER) IBox to get extended error information.

The Workspace register is for internal use by this IBox instruction and MUST NOT be used anywhere else in your program.

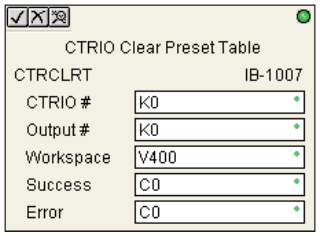

CTRCLRT Parameters

- CTRIO#: specifies a specific CTRIO module based on a user defined number (see CTRIO Config)
- Output#: specifies a CTRIO output to be used by the instruction
- Workspace: specifies a V-memory location that will be used by the instruction
- Success: specifies a bit that will turn on once the instruction has successfully completed
- Error: specifies a bit that will turn on if the instruction does not complete successfully

Parameter	DL05 Range
CTRIO# ..... K	K0-255
Output# ..... K	K0-3
Workspace V	See DL05 V-memory map - Data Words
Success ..... X,Y,C,GX,GY,B	See DL05 V-memory map
Error ..... X,Y,C,GX,GY,B	See DL05 V-memory map

CTRCLRT Example

Rung 1: This sets up the CTRIO card in slot 2 of the local base. Each CTRIO in the system will need a separate CTRIO I-box before any CTRxxxx I-boxes can be used for them. The CTRIO has been configured to use V2000 through V2025 for its input data, and V2030 through V2061 for its output data.

Rung 2: This rung is a sample method for enabling the CTRCLRT command. A C-bit is used to allow the programmer to control the command from Data View for testing purposes.

Turning on C0 will cause the CTRCLRT instruction to clear the preset table for output #0 on the CTRIO in slot 2.

Operating procedure for this example code is to load the CTRCLRT_ex1.cwb file to your CTRIO, then enter the code shown here, change to RUN mode, enable output #0 by turning on C2 in Data View, turn encoder on CTRIO to value above 10 and output #0 light will come on and stay on until a count of 20 is reached, where it will turn off. Now reset the counter with C1, enable C0 to execute CTRCLRT command to clear the preset table, turn on C2 to enable output #0, then turn encoder to value of 10+ (output #0 should NOT turn on).

CTRCLRT Example

Rung 3: This rung allows the programmer to reset the counter from the ladder logic.

Rung 4: This rung allows the operator to enable output #0 from the ladder code.

CTRIO Edit Preset Table Entry (CTREDPT) (IB-1003)

DS5	Used
HPP	N/A

CTRIO Edit Preset Table Entry, on a leading edge transition to this IBox, will edit a single entry in a Preset Table on a specific CTRIO Output resource. This IBox is good if you are editing more than one entry in a file at a time. If you wish to do just one edit and then reload the table immediately, see the CTRIO Edit and Reload Preset Table Entry (CTREDRL) IBox. This IBox will take more than 1 PLC scan to execute. Either the Success or Error bit will turn on when the command is complete. If the Error Bit is on, you can use the CTRIO Read Error Code (CTRRDER) IBox to get extended error information.

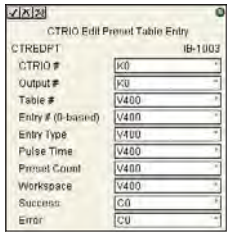

Entry Type:

K0: Set

K1: Reset

K2: Pulse On (uses Pulse Time)

K3: Pulse Off (uses Pulse Time)

K4: Toggle

K5: Reset Count

Note that the Pulse Time parameter is ignored by some Entry Types.

The Workspace register is for internal use by this IBox instruction and MUST NOT be used anywhere else in your program.

CTREDPT Parameters

- CTRIO#: specifies a specific CTRIO module based on a user defined number (see CTRIO Config Ibox)
- Output#: specifies a CTRIO output to be used by the instruction
- Table#: specifies the Table number of which an Entry is to be edited
- Entry#: specifies the Entry location in the Preset Table to be edited
- Entry Type: specifies the Entry Type to add during the edit
- Pulse Time: specifies a pulse time for the Pulse On and Pulse Off Entry Types
- Preset Count: specifies an initial count value to begin at after Reset
- Workspace: specifies a V-memory location that will be used by the instruction
- Success: specifies a bit that will turn on once the instruction has successfully completed
- Error: specifies a bit that will turn on if the instruction does not complete successfully

Parameter	DL05 Range
CTRIO# ..... K	K0-255
Output# ..... K	K0-3
Table# ..... V,K	K0-255; See DL05 V-memory map - Data Words
Entry# ..... V,K	K0-255; See DL05 V-memory map - Data Words
Entry Type ..... V,K	K0-5; See DL05 V-memory map - Data Words
Pulse Time ..... V,K	K0-65535; See DL05 V-memory map - Data Words
Preset Count ..... V,K	K0-2147434528; See DL05 V-memory map
Workspace V	See DL05 V-memory map - Data Words
Success ..... X,Y,C,GX,GY,B	See DL05 V-memory map
Error ..... X,Y,C,GX,GY,B	See DL05 V-memory map

CTREDPT Example

Rung 1: This sets up the CTRIO card in slot 2 of the local base. Each CTRIO in the system will need a separate CTRIO I-box before any CTRxxxx I-boxes can be used for them. The CTRIO has been configured to use V2000 through V2025 for its input data, and V2030 through V2061 for its output data.

(example continued on next page)

CTREDPT Example (cont'd)

Rung 2: This rung is a sample method for enabling the CTREDPT command. A C-bit is used to allow the programmer to control the command from Data View for testing purposes.

Turning on C0 will cause the CTREDPT instruction to change the second preset from a reset at a count of 20 to a reset at a count of 30 for output #0 on the CTRIO in slot 2.

Operating procedure for this example code is to load the CTREDPT_ex1.cwb file to your CTRIO, then enter the code shown here, change to RUN mode, enable output #0 by turning on C2 in Data View, turn encoder on CTRIO to value above 10 and output #0 light will come on and stay on until a count of 20 is reached, where it will turn off. Now reset the counter with C1, enable C0 to execute CTREDPT command to change the second preset, turn on C2 to enable output #0, then turn encoder to value of 10+ (output #0 should turn on) and then continue past a count of 30 (output #0 should turn off).

Note that we must also reload the profile after changing the preset(s), this is why the CTRLDPR command follows the CTREDPT command in this example.

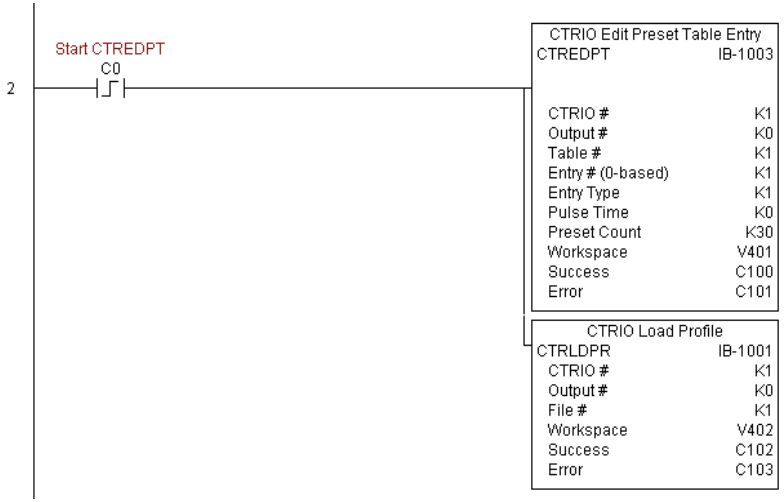

CTREDPT Example

Rung 3: This rung allows the programmer to reset the counter from the ladder logic.

Rung 4: This rung allows the operator to enable output #0 from the ladder code.

CTRIO Edit Preset Table Entry and Reload (CTREDRL) (IB-1002)

DS5	Used
HPP	N/A

CTRIO Edit Preset Table Entry and Reload, on a leading edge transition to this IBox, will perform this dual operation to a CTRIO Output resource in one CTRIO command. This IBox will take more than 1 PLC scan to execute. Either the Success or Error bit will turn on when the command is complete. If the Error Bit is on, you can use the CTRIO Read Error Code (CTRRDER) IBox to get extended error information.

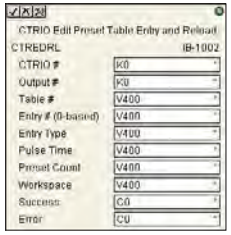

Entry Type:

K0: Set

K1: Reset

K2: Pulse On (uses Pulse Time)

K3: Pulse Off (uses Pulse Time)

K4: Toggle

K5: Reset Count

Note that the Pulse Time parameter is ignored by some Entry Types.

The Workspace register is for internal use by this IBox instruction and MUST NOT be used anywhere else in your program.

CTREDRL Parameters

- CTRIO#: specifies a specific CTRIO module based on a user defined number (see CTRIO Config Ibox)
- Output#: specifies a CTRIO output to be used by the instruction
- Table#: specifies the Table number of which an Entry is to be edited
- Entry#: specifies the Entry location in the Preset Table to be edited
- Entry Type: specifies the Entry Type to add during the edit
- Pulse Time: specifies a pulse time for the Pulse On and Pulse Off Entry Types
- Preset Count: specifies an initial count value to begin at after Reset
- Workspace: specifies a V-memory location that will be used by the instruction
- Success: specifies a bit that will turn on once the instruction has successfully completed
- Error: specifies a bit that will turn on if the instruction does not complete successfully

Parameter	DL05 Range
CTRIO# ..... K	K0-255
Output# ..... K	K0-3
Table# ..... V,K	K0-255; See DL05 V-memory map - Data Words
Entry# ..... V,K	K0-255; See DL05 V-memory map - Data Words
Entry Type ..... V,K	K0-5; See DL05 V-memory map - Data Words
Pulse Time ..... V,K	K0-65535; See DL05 V-memory map - Data Words
Preset Count ..... V,K	K0-2147434528; See DL05 V-memory map
Workspace V	See DL05 V-memory map - Data Words
Success ..... X,Y,C,GX,GY,B	See DL05 V-memory map
Error ..... X,Y,C,GX,GY,B	See DL05 V-memory map

CTREDRL Example

Rung 1: This sets up the CTRIO card in slot 2 of the local base. Each CTRIO in the system will need a separate CTRIO I-box before any CTRxxxx I-boxes can be used for them. The CTRIO has been configured to use V2000 through V2025 for its input data, and V2030 through V2061 for its output data.

(example continued on next page)

CTREDRL Example (cont'd)

Rung 2: This rung is a sample method for enabling the CTREDRL command. A C-bit is used to allow the programmer to control the command from Data View for testing purposes.

Turning on C0 will cause the CTREDRL instruction to change the second preset in file 1 from a reset at a value of 20 to a reset at a value of 30.

Operating procedure for this example code is to load the CTREDRL_ex1.cwb file to your CTRIO, then enter the code shown here, change to RUN mode, enable output #0 by turning on C2 in Data View, turn encoder on CTRIO to value above 10 and output #0 light will come on, continue to a count above 20 and the output #0 light will turn off. Now reset the counter with C1, enable C0 to execute CTREDRL command to change the second preset count value to 30, then turn encoder to value of 10+ (output #0 should turn on) and continue on to a value of 30+ and the output #0 light will turn off.

Note that it is not necessary to reload this file seperately, however, the command can only change one value at a time.

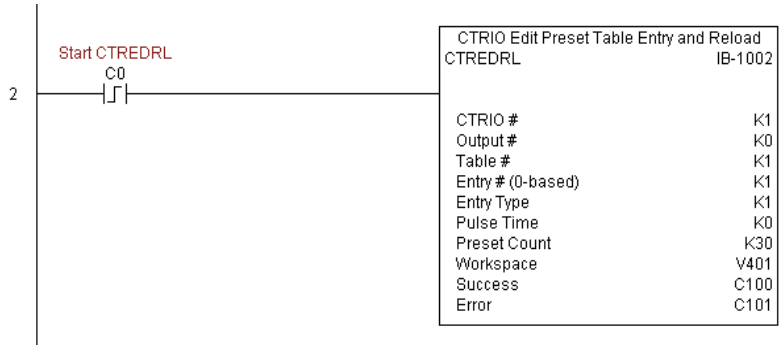

CTREDRL Example

Rung 3: This rung allows the programmer to reset the counter from the ladder logic.

Rung 4: This rung allows the operator to enable output #0 from the ladder code.

CTRIO Initialize Preset Table (CTRINPT) (IB-1004)

DS5	Used
HPP	N/A

CTRIO Initialize Preset Table, on a leading edge transition to this IBox, will create a single entry Preset Table in memory but not as a file, on a specific CTRIO Output resource. This IBox will take more than 1 PLC scan to execute.

Either the Success or Error bit will turn on when the command is complete. If the Error Bit is on, you can use the CTRIO Read Error Code (CTRRDER) IBox to get extended error information.

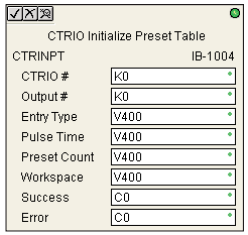

Entry Type:

K0: Set

K1: Reset

K2: Pulse On (uses Pulse Time)

K3: Pulse Off (uses Pulse Time)

K4: Toggle

K5: Reset Count

Note that the Pulse Time parameter is ignored by some Entry Types.

The Workspace register is for internal use by this IBox instruction and MUST NOT be used anywhere else in your program.

CTRINPT Parameters

- CTRIO#: specifies a specific CTRIO module based on a user defined number (see CTRIO Config Ibox)
- Output#: specifies a CTRIO output to be used by the instruction
- Entry Type: specifies the Entry Type to add during the edit
- Pulse Time: specifies a pulse time for the Pulse On and Pulse Off Entry Types
- Preset Count: specifies an initial count value to begin at after Reset
- Workspace: specifies a V-memory location that will be used by the instruction
- Success: specifies a bit that will turn on once the instruction has successfully completed
- Error: specifies a bit that will turn on if the instruction does not complete successfully

Parameter	DL05 Range
CTRIO# . . . . . K	K0-255
Output# . . . . . K	K0-3
Entry Type . . . . . V,K	K0-5; See DL05 V-memory map - Data Words
Pulse Time . . . . . V,K	K0-65535; See DL05 V-memory map - Data Words
Preset Count . . . . . V,K	K0-2147434528; See DL05 V-memory map
Workspace V	See DL05 V-memory map - Data Words
Success . . . . . X,Y,C,GX,GY,B	See DL05 V-memory map
Error . . . . . X,Y,C,GX,GY,B	See DL05 V-memory map

CTRINPT Example

Rung 1: This sets up the CTRIO card in slot 2 of the local base. Each CTRIO in the system will need a separate CTRIO I-box before any CTRxxxx I-boxes can be used for them. The CTRIO has been configured to use V2000 through V2025 for its input data, and V2030 through V2061 for its output data.

(example continued on next page)

CTRINPT Example (cont'd)

Rung 2: This rung is a sample method for enabling the CTRINPT command. A C-bit is used to allow the programmer to control the command from Data View for testing purposes.

Turning on C0 will cause the CTRINPT instruction to create a single entry preset table, but not as a file, and use it for the output #0. In this case the single preset will be a set at a count of 15 for output #0.

Operating procedure for this example code is to load the CTRINPT_ex1.cwb file to your CTRIO, then enter the code shown here, change to RUN mode, enable output #0 by turning on C2 in Data View, turn encoder on CTRIO to value above 15 and output #0 light will not come on. Now reset the counter with C1, enable C0 to execute CTRINPT command to create a single preset table with a preset to set output#0 at a count of 15, then turn encoder to value of 15+ (output #0 should turn on).

CTRINPT Example

Rung 3: This rung allows the programmer to reset the counter from the ladder logic.

Rung 4: This rung allows the operator to enable output #0 from the ladder code.

CTRIO Initialize Preset Table (CTRINTR) (IB-1010)

DS5	Used
HPP	N/A

CTRIO Initialize Preset Table, on a leading edge transition to this IBox, will create a single entry Preset Table in memory but not as a file, on a specific CTRIO Output resource.This IBox will take more than 1 PLC scan to execute. Either the Success or Error bit will turn on when the command is complete. If the Error Bit is on, you can use the CTRIO Read Error Code (CTRRDER) IBox to get extended error information.

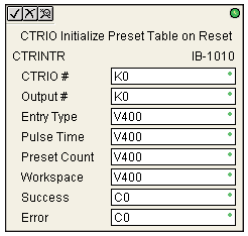

Entry Type:

K0: Set

K1: Reset

K2: Pulse On (uses Pulse Time)

K3: Pulse Off (uses Pulse Time)

K4: Toggle

K5: Reset Count

Note that the Pulse Time parameter is ignored by some Entry Types.

The Workspace register is for internal use by this IBox instruction and MUST NOT be used anywhere else in your program.

CTRINTR Parameters

- CTRIO#: specifies a specific CTRIO module based on a user defined number (see CTRIO Config Ibox)
- Output#: specifies a CTRIO output to be used by the instruction
- Entry Type: specifies the Entry Type to add during the edit
- Pulse Time: specifies a pulse time for the Pulse On and Pulse Off Entry Types
- Preset Count: specifies an initial count value to begin at after Reset
- Workspace: specifies a V-memory location that will be used by the instruction
- Success: specifies a bit that will turn on once the instruction has successfully completed
- Error: specifies a bit that will turn on if the instruction does not complete successfully

Parameter	DL05 Range
CTRIO# ..... K	K0-255
Output# ..... K	K0-3
Entry Type ..... V,K	K0-5; See DL05 V-memory map - Data Words
Pulse Time ..... V,K	K0-65535; See DL05 V-memory map - Data Words
Preset Count ..... V,K	K0-2147434528; See DL05 V-memory map
Workspace V	See DL05 V-memory map - Data Words
Success ..... X,Y,C,GX,GY,B	See DL05 V-memory map
Error ..... X,Y,C,GX,GY,B	See DL05 V-memory map

CTRINTR Example

Rung 1: This sets up the CTRIO card in slot 2 of the local base. Each CTRIO in the system will need a separate CTRIO I-box before any CTRxxxx I-boxes can be used for them. The CTRIO has been configured to use V2000 through V2025 for its input data, and V2030 through V2061 for its output data.

(example continued on next page)

CTRINTR Example (cont'd)

Rung 2: This rung is a sample method for enabling the CTRINTR command. A C-bit is used to allow the programmer to control the command from Data View for testing purposes.

Turning on C0 will cause the CTRINTR instruction to create a single entry preset table, but not as a file, and use it for output #0, the new preset will be loaded when the current count is reset. In this case the single preset will be a set at a count of 25 for output #0.

Operating procedure for this example code is to load the CTRINTR_ex1.cwb file to your CTRIO, then enter the code shown here, change to RUN mode, enable output #0 by turning on C2 in Data View, turn encoder on CTRIO to value above 10 and output #0 light will come on. Now turn on C0 to execute the CTRINTR command, reset the counter with C1, then turn encoder to value of 25+ (output #0 should turn on).

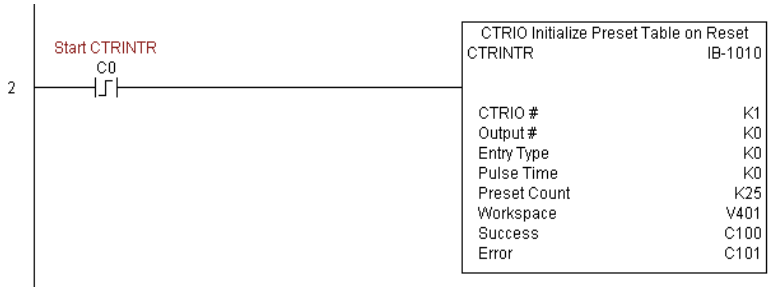

CTRINTR Example

Rung 3: This rung allows the programmer to reset the counter from the ladder logic.

Rung 4: This rung allows the operator to enable output #0 from the ladder code.

CTRIO Load Profile (CTRLDPR) (IB-1001)

DS5	Used
HPP	N/A

CTRIO Load Profile loads a CTRIO Profile File to a CTRIO Output resource on a leading edge transition to this IBox. This IBox will take more than 1 PLC scan to execute. Either the Success or Error bit will turn on when the command is complete. If the Error Bit is on, you can use the CTRIO Read Error Code (CTRRDER) IBox to get extended error information.

The Workspace register is for internal use by this IBox instruction and MUST NOT be used anywhere else in your program.

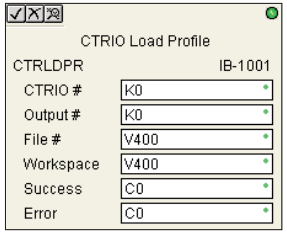

5

CTRLDPR Parameters

- CTRIO#: specifies a specific CTRIO module based on a user defined number (see CTRIO Config)
- Output#: specifies a CTRIO output to be used by the instruction
- File#: specifies a CTRIO profile File number to be loaded
- Workspace: specifies a V-memory location that will be used by the instruction
- Success: specifies a bit that will turn on once the instruction has successfully completed
- Error: specifies a bit that will turn on if the instruction does not complete successfully

Parameter	DL05 Range
CTRIO# ..... K	K0-255
Output# ..... K	K0-3
File# ..... V,K	K0-255; See DL05 V-memory map - Data Words
Workspace V	See DL05 V-memory map - Data Words
Success ..... X,Y,C,GX,GY,B	See DL05 V-memory map
Error ..... X,Y,C,GX,GY,B	See DL05 V-memory map

CTRLDPR Example

Rung 1: This sets up the CTRIO card in slot 2 of the local base. Each CTRIO in the system will need a separate CTRIO I-box before any CTRxxxx I-boxes can be used for them. The CTRIO has been configured to use V2000 through V2025 for its input data, and V2030 through V2061 for its output data.

5

Rung 2: This CTRIO Load Profile IBox will load File #1 into the working memory of Output 0 in CTRIO #1. This example program requires that you load CTRLDPR_IBox.cwb into your Hx-CTRIO module.

Rung 3: If the file is successfully loaded, set Profile_Loaded.

CTRIO Read Error (CTRRDER) (IB-1014)

DS5	Used
HPP	N/A

CTRIO Read Error Code will get the decimal error code value from the CTRIO module (listed below) and place it into the given Error Code register, on a leading edge transition to the IBox

Since the Error Code in the CTRIO is only maintained until another CTRIO command is given, you must use this instruction immediately after the CTRIO IBox that reports an error via its Error bit parameter.

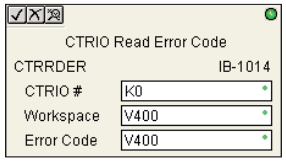

The Workspace register is for internal use by this IBox instruction and MUST NOT be used anywhere else in your program.

Error Codes:

0: No Error

100: Specified command code is unknown or unsupported

101: File number not found in the file system

102: File type is incorrect for specified output function

103: Profile type is unknown

104: Specified input is not configured as a limit on this output

105: Specified limit input edge is out of range

106: Specified input function is unconfigured or invalid

107: Specified input function number is out of range

108: Specified preset function is invalid

109: Preset table is full

110: Specified Table entry is out of range

111: Specified register number is out of range

112: Specified register is an unconfigured input or output

2001: Error reading Error Code - cannot access CTRIO via ERM

CTRRDER Parameters

- CTRIO#: specifies a specific CTRIO module based on a user defined number (see CTRIO Config)
- Workspace: specifies a V-memory location that will be used by the instruction
- Error Code: specifies the location where the Error Code will be written

Parameter	DL05 Range
CTRIO# ..... K	K0-255
Workspace V	See DL05 V-memory map - Data Words
Error Code V	See DL05 V-memory map - Data Words

CTRRDER Example

Rung 1: This sets up the CTRIO card in slot 2 of the local base. Each CTRIO in the system will need a separate CTRIO I-box before any CTRxxxx I-boxes can be used for them. The CTRIO has been configured to use V2000 through V2025 for its input data, and V2030 through V2061 for its output data.

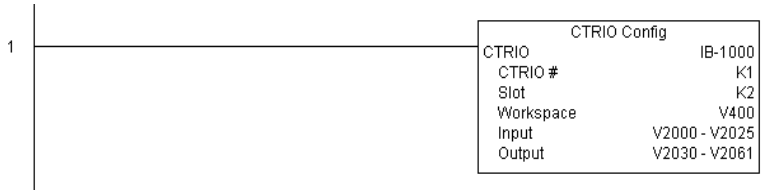

Rung 2: This CTRIO Read Error Code IBox will read the Extended Error information from CTRIO #1. This example program requires that you load CTRRDER_IBox.cwb into your Hx-CTRIO module.

CTRIO Run to Limit Mode (CTRRTLM) (IB-1011)

DS5	Used
HPP	N/A

CTRIO Run To Limit Mode, on a leading edge transition to this IBox, loads the Run to Limit command and given parameters on a specific Output resource. The CTRIO's Input(s) must be configured as Limit(s) for this function to work.

Valid Hexadecimal Limit Values:

K00 - Rising Edge of Ch1/C
K10 - Falling Edge of Ch1/C
K20 - Both Edges of Ch1/C
K01 - Rising Edge of Ch1/D
K11 - Falling Edge of Ch1/D
K21 - Both Edges of Ch1/D
K02 - Rising Edge of Ch2/C
K12 - Falling Edge of Ch2/C
K22 - Both Edges of Ch2/C
K03 - Rising Edge of Ch2/D
K13 - Falling Edge of Ch2/D
K23 - Both Edges of Ch2/D

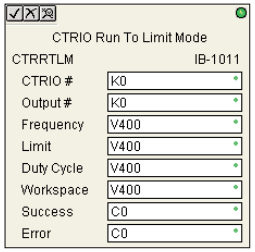

This IBox will take more than 1 PLC scan to execute. Either the Success or Error bit will turn on when the command is complete. If the Error Bit is on, you can use the CTRIO Read Error Code (CTRRDER) IBox to get extended error information.

The Workspace register is for internal use by this IBox instruction and MUST NOT be used anywhere else in your program.

CTRRTLM Parameters

- CTRIO#: specifies a specific CTRIO module based on a user defined number (see CTRIO Config Ibox)
- Output#: specifies a CTRIO output to be used by the instruction
- Frequency: specifies the output pulse rate (20Hz - 20KHz)
- Limit: the CTRIO's Input(s) must be configured as Limit(s) for this function to operate
- Duty Cycle: specifies the % of on time versus off time. This is a hex number. Default of 0 is 50%, also entering 50 will yield 50%. 50% duty cycle is defined as on half the time and off half the time
- Workspace: specifies a V-memory location that will be used by the instruction
- Success: specifies a bit that will turn on once the instruction has successfully completed
- Error: specifies a bit that will turn on if the instruction does not complete successfully

Parameter	DL05 Range
CTRIO# ..... K	K0-255
Output# ..... K	K0-3
Frequency ..... V,K	K20-20000; See DL05 V-memory map - Data Words
Limit ..... V,K	K0-FF; See DL05 V-memory map - Data Words
Duty Cycle ..... V,K	K0-99; See DL05 V-memory map - Data Words
Workspace V	See DL05 V-memory map - Data Words
Success ..... X,Y,C,GX,GY,B	See DL05 V-memory map
Error ..... X,Y,C,GX,GY,B	See DL05 V-memory map

CTRRTLM Example

Rung 1: This sets up the CTRIO card in slot 2 of the local base. Each CTRIO in the system will need a separate CTRIO I-box before any CTRxxxx I-boxes can be used for them. The CTRIO has been configured to use V2000 through V2025 for its input data, and V2030 through V2061 for its output data.

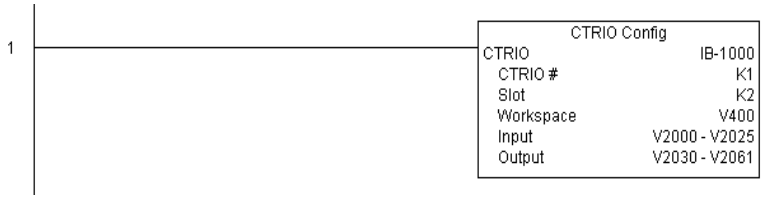

Rung 2: This CTRIO Run To Limit Mode IBox sets up Output #0 in CTRIO #1 to output pulses at a Frequency of 1000 Hz until Llimit #0 comes on. This example program requires that you load CTRRTLM_IBox.cwb into your Hx-CTRIO module.

(example continued on next page)

CTRRTLM Example (cont'd)

Rung 3: If the Run To Limit Mode parameters are OK, set the Direction Bit and Enable the output.

CTRIO Run to Position Mode (CTRRTPM) (IB-1012)

DS5	Used
HPP	N/A

CTRIO Run To Position Mode, on a leading edge transition to this IBox, loads the Run to Position command and given parameters on a specific Output resource.

Valid Function Values are:

00: Less Than Ch1/Fn1

10: Greater Than Ch1/Fn1

01: Less Than Ch1/Fn2

11: Greater Than Ch1/Fn2

02: Less Than Ch2/Fn1

12: Greater Than Ch2/Fn1

03: Less Than Ch2/Fn2

13: Greater Than Ch2/Fn2

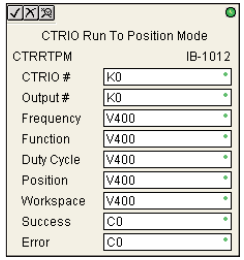

This IBox will take more than 1 PLC scan to execute. Either the Success or Error bit will turn on when the command is complete. If the Error Bit is on, you can use the CTRIO Read Error Code (CTRRDER) IBox to get extended error information.

The Workspace register is for internal use by this IBox instruction and MUST NOT be used anywhere else in your program.

CTRRTPM Parameters

- CTRIO#: specifies a specific CTRIO module based on a user defined number (see CTRIO Config Ibox)
- Output#: specifies a CTRIO output to be used by the instruction
- Frequency: specifies the output pulse rate (20Hz - 20KHz)
- Duty Cycle: specifies the % of on time versus off time. This is a hex number. Default of 0 is 50%, also entering 50 will yield 50%. 50% duty cycle is defined as on half the time and off half the time
- Position: specifies the count value, as measured on the encoder input, at which the output pulse train will be turned off
- Workspace: specifies a V-memory location that will be used by the instruction
- Success: specifies a bit that will turn on once the instruction has successfully completed
- Error: specifies a bit that will turn on if the instruction does not complete successfully

Parameter	DL05 Range
CTRIO# ..... K	K0-255
Output# ..... K	K0-3
Frequency ..... V,K	K20-20000; See DL05 V-memory map - Data Words
Duty Cycle ..... V,K	K0-99; See DL05 V-memory map
Position ..... V,K	K0-2147434528; See DL05 V-memory map
Workspace V	See DL05 V-memory map - Data Words
Success ..... X,Y,C,GX,GY,B	See DL05 V-memory map
Error ..... X,Y,C,GX,GY,B	See DL05 V-memory map

CTRRTPM Example

Rung 1: This sets up the CTRIO card in slot 2 of the local base. Each CTRIO in the system will need a separate CTRIO I-box before any CTRxxxx I-boxes can be used for them. The CTRIO has been configured to use V2000 through V2025 for its input data, and V2030 through V2061 for its output data.

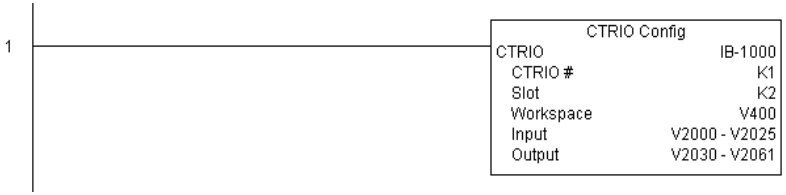

Rung 2: This CTRIO Run To Position Mode IBox sets up Output #0 in CTRIO #1 to output pulses at a Frequency of 1000 Hz, use the 'Greater than Ch1/Fn1' comparison operator, until the input position of 1500 is reached. This example program requires that you load CTRRTPM_IBox.cwb into your Hx-CTRIO module.

Rung 3: If the Run To Position Mode parameters are OK, set the Direction Bit and Enable the output.

CTRIO Velocity Mode (CTRVELO) (IB-1013)

DS5	Used
HPP	N/A

CTRIO Velocity Mode loads the Velocity command and given parameters on a specific Output resource on a leading edge transition to this IBox.

This IBox will take more than 1 PLC scan to execute. Either the Success or Error bit will turn on when the command is complete. If the Error Bit is on, you can use the CTRIO Read Error Code (CTRRDER) IBox to get extended error information.

The Workspace register is for internal use by this IBox instruction and MUST NOT be used anywhere else in your program.

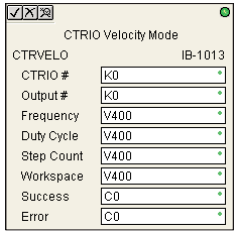

CTRVELO Parameters

- CTRIO#: specifies a specific CTRIO module based on a user defined number (see CTRIO Config Ibox)
- Output#: specifies a CTRIO output to be used by the instruction
- Frequency: specifies the output pulse rate (20Hz - 20KHz)
- Duty Cycle: specifies the % of on time versus off time. This is a hex number. Default of 0 is 50%, also entering 50 will yield 50%. 50% duty cycle is defined as on half the time and off half the time
- Step Count: specifies the target position as a 32-bit Hex number, a value of Kffffffff will cause the profile to run continuously as long as the output is enabled
- Workspace: specifies a V-memory location that will be used by the instruction
- Success: specifies a bit that will turn on once the instruction has successfully completed
- Error: specifies a bit that will turn on if the instruction does not complete successfully

Parameter	DL05 Range
CTRIO# ..... K	K0-255
Output# ..... K	K0-3
Frequency ..... V,K	K20-20000; See DL05 V-memory map - Data Words
Duty Cycle ..... V,K	K0-99; See DL05 V-memory map
Step Count ..... V,K	K0-2147434528; See DL05 V-memory map
Workspace V	See DL05 V-memory map - Data Words
Success ..... X,Y,C,GX,GY,B	See DL05 V-memory map
Error ..... X,Y,C,GX,GY,B	See DL05 V-memory map

CTRVELO Example

Rung 1: This sets up the CTRIO card in slot 2 of the local base. Each CTRIO in the system will need a separate CTRIO I-box before any CTRxxxx I-boxes can be used for them. The CTRIO has been configured to use V2000 through V2025 for its input data, and V2030 through V2061 for its output data.

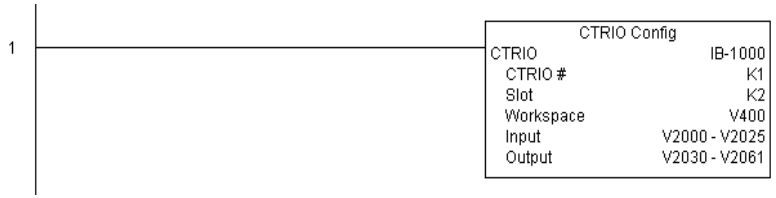

Rung 2: This CTRIO Velocity Mode IBox sets up Output #0 in CTRIO #1 to output 10,000 pulses at a Frequency of 1000 Hz. This example program requires that you load CTRVELO_IBox.cwb into your Hx-CTRIO module.

CTRVELO Example

Rung 3: If the Velocity Mode parameters are OK, set the Direction Bit and Enable the output.

CTRIO Write File to ROM (CTRWFTR) (IB-1006)

DS5	Used
HPP	N/A

CTRIO Write File to ROM writes the runtime changes made to a loaded CTRIO Preset Table back to Flash ROM on a leading edge transition to this IBox. This IBox will take more than 1 PLC scan to execute. Either the Success or Error bit will turn on when the command is complete. If the Error Bit is on, you can use the CTRIO Read Error Code (CTRRDER) IBox to get extended error information.

The Workspace register is for internal use by this IBox instruction and MUST NOT be used anywhere else in your program.

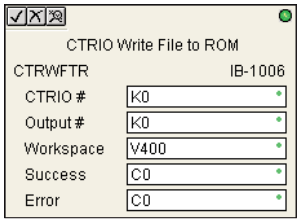

CTRWFTR Parameters

- CTRIO#: specifies a specific CTRIO module based on a user defined number (see CTRIO Config Ibox)
- Output#: specifies a CTRIO output to be used by the instruction
- Workspace: specifies a V-memory location that will be used by the instruction
- Success: specifies a bit that will turn on once the instruction has successfully completed
- Error: specifies a bit that will turn on if the instruction does not complete successfully

Parameter	DL05 Range
CTRIO# ..... K	K0-255
Output# ..... K	K0-3
Workspace V	See DL05 V-memory map - Data Words
Success ..... X,Y,C,GX,GY,B	See DL05 V-memory map
Error ..... X,Y,C,GX,GY,B	See DL05 V-memory map

CTRWFTR Example

Rung 1: This sets up the CTRIO card in slot 2 of the local base. Each CTRIO in the system will need a separate CTRIO I-box before any CTRxxxx I-boxes can be used for them. The CTRIO has been configured to use V2000 through V2025 for its input data, and V2030 through V2061 for its output data.

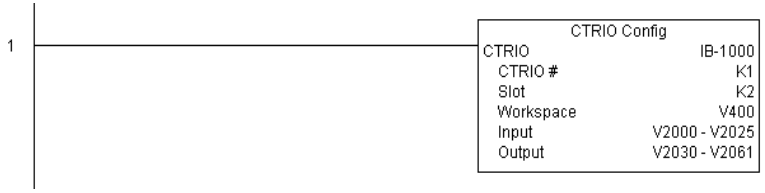

Rung 2: This CTRIO Edit Preset Table Entry IBox will change Entry 0 in Table #2 to be a RESET at Count 3456. This example program requires that you load CTRWFTR_IBox.cwb into your Hx-CTRIO module.

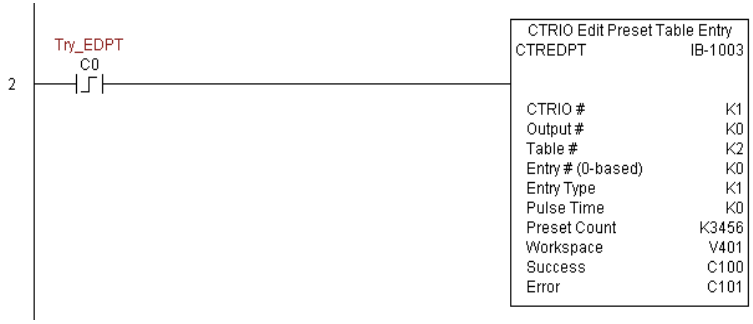

(example continued on next page)

CTRWFTR Example (cont'd)

Rung 3: If the file is successfully editted, use a Write File To ROM IBox to save the edited table back to the CTRIO's ROM, thereby making the changes retentive.

AUTOMATIONDIRECT.com

DL05 Micro PLC User Manual

Volume 2 of 2

Manual Number: D0-USER-M

Notes

WARNING

Thank you for purchasing automation equipment from **Automationdirect.com®**, doing business as **AutomationDirect**. We want your new automation equipment to operate safely. Anyone who installs or uses this equipment should read this publication (and any other relevant publications) before installing or operating the equipment.

To minimize the risk of potential safety problems, you should follow all applicable local and national codes that regulate the installation and operation of your equipment. These codes vary from area to area and usually change with time. It is your responsibility to determine which codes should be followed, and to verify that the equipment, installation, and operation is in compliance with the latest revision of these codes.

At a minimum, you should follow all applicable sections of the National Fire Code, National Electrical Code, and the codes of the National Electrical Manufacturer's Association (NEMA). There may be local regulatory or government offices that can also help determine which codes and standards are necessary for safe installation and operation.

Equipment damage or serious injury to personnel can result from the failure to follow all applicable codes and standards. We do not guarantee the products described in this publication are suitable for your particular application, nor do we assume any responsibility for your product design, installation, or operation.

Our products are not fault-tolerant and are not designed, manufactured or intended for use or resale as on-line control equipment in hazardous environments requiring fail-safe performance, such as in the operation of nuclear facilities, aircraft navigation or communication systems, air traffic control, direct life support machines, or weapons systems, in which the failure of the product could lead directly to death, personal injury, or severe physical or environmental damage ("High Risk Activities"). **AutomationDirect** specifically disclaims any expressed or implied warranty of fitness for High Risk Activities.

For additional warranty and safety information, see the Terms and Conditions section of our catalog. If you have any questions concerning the installation or operation of this equipment, or if you need additional information, please call us at 770-844-4200.

This publication is based on information that was available at the time it was printed. At **AutomationDirect** we constantly strive to improve our products and services, so we reserve the right to make changes to the products and/or publications at any time without notice and without any obligation. This publication may also discuss features that may not be available in certain revisions of the product.

Trademarks

This publication may contain references to products produced and/or offered by other companies. The product and company names may be trademarked and are the sole property of their respective owners. **AutomationDirect** disclaims any proprietary interest in the marks and names of others.

Copyright 2010, Automationdirect.com Incorporated
All Rights Reserved

No part of this manual shall be copied, reproduced, or transmitted in any way without the prior, written consent of **Automationdirect.com** Incorporated. **AutomationDirect** retains the exclusive rights to all information included in this document.

AVERTISSEMENT

Nous vous remercions d'avoir acheté l'équipement d'automatisation de **Automationdirect.com**MC., en faisant des affaires comme, **AutomationDirect**. Nous tenons à ce que votre nouvel équipement d'automatisation fonctionne en toute sécurité. Toute personne qui installe ou utilise cet équipement doit lire la présente publication (et toutes les autres publications pertinentes) avant de l'installer ou de l'utiliser.

Afin de réduire au minimum le risque d'éventuels problèmes de sécurité, vous devez respecter tous les codes locaux et nationaux applicables régissant l'installation et le fonctionnement de votre équipement. Ces codes diffèrent d'une région à l'autre et, habituellement, évoluent au fil du temps. Il vous incombe de déterminer les codes à respecter et de vous assurer que l'équipement, l'installation et le fonctionnement sont conformes aux exigences de la version la plus récente de ces codes.

Vous devez, à tout le moins, respecter toutes les sections applicables du Code national de prévention des incendies, du Code national de l'électricité et des codes de la National Electrical Manufacturer's Association (NEMA). Des organismes de réglementation ou des services gouvernementaux locaux peuvent également vous aider à déterminer les codes ainsi que les normes à respecter pour assurer une installation et un fonctionnement sûrs.

L'omission de respecter la totalité des codes et des normes applicables peut entraîner des dommages à l'équipement ou causer de graves blessures au personnel. Nous ne garantissons pas que les produits décrits dans cette publication conviennent à votre application particulière et nous n'assumons aucune responsabilité à l'égard de la conception, de l'installation ou du fonctionnement de votre produit.

Nos produits ne sont pas insensibles aux défaillances et ne sont ni conçus ni fabriqués pour l'utilisation ou la revente en tant qu'équipement de commande en ligne dans des environnements dangereux nécessitant une sécurité absolue, par exemple, l'exploitation d'installations nucléaires, les systèmes de navigation aérienne ou de communication, le contrôle de la circulation aérienne, les équipements de survie ou les systèmes d'armes, pour lesquels la défaillance du produit peut provoquer la mort, des blessures corporelles ou de graves dommages matériels ou environnementaux («activités à risque élevé»). La société **AutomationDirect** nie toute garantie expresse ou implicite d'aptitude à l'emploi en ce qui a trait aux activités à risque élevé.

Pour des renseignements additionnels touchant la garantie et la sécurité, veuillez consulter la section Modalités et conditions de notre documentation. Si vous avez des questions au sujet de l'installation ou du fonctionnement de cet équipement, ou encore si vous avez besoin de renseignements supplémentaires, n'hésitez pas à nous téléphoner au 770-844-4200.

Cette publication s'appuie sur l'information qui était disponible au moment de l'impression. À la société **AutomationDirect**, nous nous efforçons constamment d'améliorer nos produits et services. C'est pourquoi nous nous réservons le droit d'apporter des modifications aux produits ou aux publications en tout temps, sans préavis ni quelque obligation que ce soit. La présente publication peut aussi porter sur des caractéristiques susceptibles de ne pas être offertes dans certaines versions révisées du produit.

Marques de commerce

La présente publication peut contenir des références à des produits fabriqués ou offerts par d'autres entreprises. Les désignations des produits et des entreprises peuvent être des marques de commerce et appartiennent exclusivement à leurs propriétaires respectifs. **AutomationDirect** nie tout intérêt dans les autres marques et désignations.

Copyright 2010, Automationdirect.com Incorporated
Tous droits réservés

Nulle partie de ce manuel ne doit être copiée, reproduite ou transmise de quelque façon que ce soit sans le consentement préalable écrit de la société **Automationdirect.com** Incorporated. **AutomationDirect** conserve les droits exclusifs à l'égard de tous les renseignements contenus dans le présent document.

VOLUME TWO:

TABLE OF CONTENTS

Chapter 6: Drum Instruction Programming

DL05 Drum Introduction 6–2
Purpose 6–2
Drum Terminology 6–2
Drum Chart Representation 6–3
Output Sequences 6–3

Step Transitions 6–4
Drum Instruction Types 6–4
Timer-Only Transitions 6–4
Timer and Event Transitions 6–5
Event-Only Transitions 6–6
Counter Assignments 6–6
Last Step Completion 6–7

Overview of Drum Operation 6–8
Drum Instruction Block Diagram 6–8
Powerup State of Drum Registers 6–9

Drum Control Techniques 6–10
Drum Control Inputs 6–10
Self-Resetting Drum 6–11
Initializing Drum Outputs 6–11
Using Complex Event Step Transitions 6–11

Drum Instruction 6–12
Timed Drum with Discrete Outputs (DRUM) 6–12

Event Drum (EDRUM) Instruction 6–14
Program Using the Handheld Programmer 6–16

Chapter 7: RLLPLUS Stage Programming

Introduction to Stage Programming 7–2
Overcoming "Stage Fright" 7–2

Learning to Draw State Transition Diagrams 7–3
Introduction to Process States 7–3
The Need for State Diagrams 7–3
A 2–State Process 7–3
RLL Equivalent 7–4
Stage Equivalent 7–4
Let's Compare 7–5
Initial Stages 7–5
What Stage Bits Do 7–6
Stage Instruction Characteristics 7–6

Using the Stage Jump Instruction for State Transitions 7–7
Stage Jump, Set, and Reset Instructions 7–7

Stage Program Example: Toggle On/Off Lamp Controller 7–8
A 4–State Process 7–8

Four Steps to Writing a Stage Program 7–9

Stage Program Example: A Garage Door Opener 7–10
Garage Door Opener Example 7–10
Draw the Block Diagram 7–10
Draw the State Diagram 7–11
Add Safety Light Feature 7–12
Modify the Block Diagram and State Diagram 7–12
Using a Timer Inside a Stage 7–13
Add Emergency Stop Feature 7–14
Exclusive Transitions 7–14

Stage Program Design Considerations 7–15
Stage Program Organization 7–15
How Instructions Work Inside Stages 7–16
Using a Stage as a Supervisory Process 7–17
Stage Counter 7–17
Power Flow Transition Technique 7–18
Stage View in *Direct*SOFT 5 7–18

Parallel Processing Concepts **7–19**
Parallel Processes 7–19
Converging Processes 7–19
Convergence Stages (CV) 7–19
Convergence Jump (CVJMP) 7–20
Convergence Stage Guidelines 7–20
RLL^{PLUS} (Stage) Instructions **7–21**
Stage (SG) 7–21
Initial Stage (ISG) 7–22
JUMP (JMP) 7–22
Not Jump (NJMP) 7–22
Converge Stage (CV) and Converge Jump (CVJMP) 7–23
Questions and Answers about Stage Programming **7–25**

Chapter 8: PID Loop Operation

DL05 PID Control **8–2**
DL05 PID Control Features 8–2
Introduction to PID Control **8–4**
What is PID Control? 8–4
Introducing DL05 PID Control **8–6**
Process Control Definitions 8–8
PID Loop Operation **8–9**
Position Form of the PID Equation 8–9
Reset Windup Protection 8–10
Freeze Bias 8–11
Adjusting the Bias 8–11
Step Bias Proportional to Step Change in SP 8–12
Eliminating Proportional, Integral or Derivative Action 8–12
Velocity Form of the PID Equation 8–12
Bumpless Transfer 8–13
Loop Alarms 8–13
Loop Operating Modes 8–14
Special Loop Calculations 8–14
Ten Steps to Successful Process Control **8–16**

PID Loop Setup **8–18**
Some Things to Do and Know Before Starting 8–18
PID Error Flags 8–18
Establishing the Loop Table Size and Location 8–18
Loop Table Word Definitions 8–20
PID Mode Setting 1 Bit Descriptions (Addr + 00) 8–21
PID Mode Setting 2 Bit Descriptions (Addr + 01) 8–22
Mode/Alarm Monitoring Word (Addr + 06) 8–23
Ramp/Soak Table Flags (Addr + 33) 8–23
Ramp/Soak Table Location (Addr + 34) 8–24
Ramp/Soak Table Programming Error Flags (Addr + 35) 8–24
Configure the PID Loop 8–25
PID Loop Tuning **8–40**
Open-Loop Test 8–40
Manual Tuning Procedure 8–41
Auto Tuning Procedure 8–44
Use *Direct*SOFT 5 Data View with PID View 8–48
Open a New Data View Window 8–48
Open PID View 8–49
Using the Special PID Features **8–51**
How to Change Loop Modes 8–51
Operator Panel Control of PID Modes 8–52
PLC Modes Effect on Loop Modes 8–52
Loop Mode Override 8–52
PV Analog Filter 8–53
Creating an Analog Filter in Ladder Logic 8–54
Use the *Direct*SOFT 5 Filter Intelligent Box Instruction 8–55
FilterB Example 8–55
Ramp/Soak Generator **8–56**
Introduction 8–56
Ramp/Soak Table 8–57
Ramp/Soak Table Flags 8–59
Ramp/Soak Generator Enable 8–59
Ramp/Soak Controls 8–59
Ramp/Soak Profile Monitoring 8–60

Ramp/Soak Programming Errors 8–60
Testing Your Ramp/Soak Profile 8–60

***Direct*SOFT 5 Ramp/Soak Example 8–61**
Setup the Profile in PID Setup 8–61
Program the Ramp/Soak Control in Relay Ladder 8–61
Test the Profile 8–62

Cascade Control 8–63
Introduction 8–63
Cascaded Loops in the DL05 CPU 8–64
Tuning Cascaded Loops 8–65

Time-Proportioning Control 8–66
On/Off Control Program Example 8–67

Feedforward Control 8–68
Feedforward Example 8–69

PID Example Program 8–70
Program Setup for the PID Loop 8–70

Troubleshooting Tips 8–72

Glossary of PID Loop Terminology 8–74

Bibliography 8–76

Chapter 9: Maintenance and Troubleshooting

Hardware System Maintenance 9–2
Standard Maintenance 9–2

Diagnostics 9–2
Diagnostics 9–2
Fatal Errors 9–2
Non-fatal Errors 9–2
V-memory Error Code Locations 9–3
Special Relays (SP) Corresponding to Error Codes 9–3
DL05 Micro PLC Error Codes 9–4
Program Error Codes 9–5

CPU Indicators 9–6
RUN Indicator 9–7

CPU Indicator 9–7

Communications Problems 9–7

I/O Point Troubleshooting 9–8
Possible Causes 9–8
Some Quick Steps 9–8
Handheld Programmer Keystrokes Used to Test an Output Point 9–9

Noise Troubleshooting 9–10
Electrical Noise Problems 9–10
Reducing Electrical Noise 9–10

Machine Startup and Program Troubleshooting 9–11
Syntax Check 9–11
Special Instructions 9–12
Duplicate Reference Check 9–13
Run Time Edits 9–14
Forcing I/O Points 9–16
Bit Forcing with Direct Access 9–16

Chapter 10: Memory Cartridge/Real Time Clock

General Information about the D0–01MC 10–2
Jumper Selects Write Enable or Disable 10–2
Low Battery Alert 10–2
Clock/Calendar 10–2
Specifications 10–2
New Ladder Instructions 10–2
Error Code Changes 10–2

Setting the Write Enable/Disable Jumper 10–3
Write Enable 10–3
Write Disable 10–3

Plugging-in the Memory Cartridge 10–4
Remove the Slot Cover 10–4
Insert the Memory Cartridge 10–4

Software and Firmware Requirements 10–5
How to Update Your *Direct*SOFT Programming Software 10–5
How to Update Your DL05 Firmware 10–5

Naming the Memory Cartridge **10–6**
Up to 8 Alphanumeric Characters 10–6
Name is Retained in Cartridge Memory and Project Folder 10–6
Setting the Time and Date **10–7**
Memory Transfers **10–8**
CPU to MC 10–8
MC to CPU 10–8
LED Indicator Lights **10–9**
Password Protected Programs **10–9**
Memory Map and Forwarding Range **10–10**
Battery Back-up During AC Power Loss **10–11**
What if the Battery Dies? 10–11
Battery Type 10–11
Removing and Replacing the Battery 10–11
Specifications and Agency Approvals **10–12**
Clock/Calendar Instructions **10–13**
Date (DATE) 10–13
Time (TIME) 10–14
Move Memory Cartridge / Load Label (MOVMC) (LDLBL) 10–15
Copy Data From a Data Label Area to V-memory 10–16
Copy Data From V-memory to a Data Label Area 10–17
Error Codes **10–18**

Appendix A: Auxiliary Functions

Introduction **A–2**
Purpose of Auxiliary Functions A–2
Accessing AUX Functions via *Direct*SOFT 5 . . . . . A–3
Accessing AUX Functions via the Handheld Programmer A–3
AUX 2* — RLL Operations **A–4**
AUX 21 Check Program A–4
AUX 22 Change Reference A–4
AUX 23 Clear Ladder Range A–4
AUX 24 Clear Ladders A–4

AUX 3* — V-memory Operations **A–4**
AUX 31 Clear V-Memory A–4
AUX 4* — I/O Configuration **A–5**
AUX 41 Show I/O Configuration A–5
AUX 5* — CPU Configuration **A–5**
AUX 51 Modify Program Name A–5
AUX 53 Display Scan Time A–5
AUX 54 Initialize Scratchpad A–5
AUX 55 Set Watchdog Timer A–5
AUX 56 CPU Network Address A–6
AUX 57 Set Retentive Ranges A–6
AUX 58 Test Operations A–6
AUX 59 Bit Override A–7
AUX 5B Counter Interface Configuration A–7
AUX 5D Select PLC Scan Mode A–7
AUX 6* — Handheld Programmer Configuration **A–8**
AUX 61 Show Revision Numbers A–8
AUX 62 Beeper On/Off A–8
AUX 65 Run Self Diagnostics A–8
AUX 7* — EEPROM Operations **A–8**
Transferrable Memory Areas A–8
AUX 71 CPU to HPP EEPROM A–8
AUX 72 HPP EEPROM to CPU A–9
AUX 73 Compare HPP EEPROM to CPU A–9
AUX 74 HPP EEPROM Blank Check A–9
AUX 75 Erase HPP EEPROM A–9
AUX 76 Show EEPROM Type A–9
AUX 8* — Password Operations **A–9**
AUX 81 Modify Password A–9
AUX 82 Unlock CPU A–10
AUX 83 Lock CPU A–10

Appendix B: DL05 Error Codes

DL05 Error Codes **B-2**

Appendix C: Instruction Execution Times

Introduction **C–2**
V-memory Data Registers C–2
V-memory Bit Registers C–2
How to Read the Tables C–2
Instruction Execution Times **C–3**
Boolean Instructions C–3
Comparative Boolean Instructions C–4
Immediate Instructions C–10
Timer, Counter and Shift Register C–10
Accumulator Data Instructions C–11
Logical Instructions C–12
Math Instructions C–12
Bit Instructions C–14
Number Conversion Instructions C–14
Table Instructions C–14
CPU Control Instructions C–15
Program Control Instructions C–15
Interrupt Instructions C–15
Network Instructions C–15
Message Instructions C–16
RLL PLUS Instructions C–16
Drum Instructions C–16
Word Bit Instructions C–17

Appendix D: Special Relays

DL05 PLC Special Relays **D–2**

Appendix E: High-speed Input and Pulse Output Features

Introduction **E–2**
Built-in Motion Control Solution E–2
Availability of HSIO Features E–2
Dedicated High-Speed I/O Circuit E–3
Wiring Diagrams for Each HSIO Mode E–3

Choosing the HSIO Operating Mode **E–4**
Understanding the Six Modes E–4
Default Mode E–4
Configuring the HSIO Mode E–5
Configuring Inputs X0 – X2 . . . . . E–5
Mode 10: High-Speed Counter **E–6**
Purpose E–6
Functional Block Diagram E–6
Wiring Diagram E–7
Interfacing to Counter Inputs E–7
Interfacing to Counter Outputs E–7
Setup for Mode 10 . . . . . E–8
Presets and Special Relays E–8
Preset Data Starting Location E–9
Using Fewer than 24 Presets E–9
Equal Relay Numbers E–9
Calculating Your Preset Values E–10
X Input Configuration E–10
Writing Your Control Program E–11
Program Example: Counter Without Preset E–12
Counter With Presets Program Example E–14
Counter With Preload Program Example E–16
Troubleshooting Guide for Mode 10 . . . . . E–17
Symptom: The counter does not count. E–17
Symptom: The counter counts but the presets do not function. E–17
Symptom: The counter counts up but will not reset. E–17
Mode 20: Quadrature Counter **E–18**
Purpose E–18
Functional Block Diagram E–18
Quadrature Encoder Signals E–18
Wiring Diagram E–19
Interfacing to Encoder Outputs E–19
Setup for Mode 20 . . . . . E–20
X Input Configuration E–20
Writing Your Control Program E–21

Quadrature Counter w/Preload Program Example E–21
Counter Preload Program Example E–23
Troubleshooting Guide for HSIO Mode 20 . . . . . E–23
Symptom: The counter does not count. E–23
Symptom: The counter counts in the wrong direction E–23
Symptom: The counter counts up and down but will not reset. E–23

Mode 30: Pulse Output E–24
Purpose E–24
Functional Block Diagram E–25
Wiring Diagram E–26
Interfacing to Drive Inputs E–26
Motion Control Profile Specifications E–27
Physical I/O Configuration E–27
Logical I/O Functions E–27
Setup for Mode 30 . . . . . E–28
Profile / Velocity Select Register E–28
Profile Parameter Table E–29
Trapezoidal Profile E–29
Registration Profile E–29
Velocity Profile E–29
Choosing the Profile Type E–30
Trapezoidal Profile Defined E–30
Registration and Home Search Profiles Defined E–30
Velocity Profile Defined E–30

Trapezoidal Profile Operation E–31
Trapezoidal Profile Applications E–31
Trapezoidal Profile Program Example E–32
Preload Position Value E–33

Registration Profile Operation E–34
Registration Applications E–34
Registration Profile Program Example E–35
Home Search Program Example E–37

Velocity Profile Operation E–39
Velocity Profile Applications E–39
Velocity Profile Program Example E–40

Pulse Output Error Codes E–42
Troubleshooting Guide for HSIO Mode 30 . . . . . E–42
Symptom: The stepper motor does not rotate. E–42
Symptom: The motor turns in the wrong direction. E–43

Mode 40: High-Speed Interrupts E–44
Purpose E–44
Functional Block Diagram E–44
Setup for Mode 40 . . . . . E–45
Interrupts and the Ladder Program E–45
External Interrupt Timing Parameters E–46
Timed Interrupt Parameters E–46
X Input/Timed INT Configuration E–46
Independent Timed Interrupt E–46
External Interrupt Program Example E–47
Timed Interrupt Program Example E–48

Mode 50: Pulse Catch Input E–49
Purpose E–49
Functional Block Diagram E–49
Pulse Catch Timing Parameters E–49
Setup for Mode 50 . . . . . E–50
X Input Configuration E–50
Pulse Catch Program Example E–51

Mode 60: Discrete Inputs with Filter E–52
Purpose E–52
Functional Block Diagram E–52
Input Filter Timing Parameters E–52
Setup for Mode 60 . . . . . E–53
X Input Configuration E–53
Filtered Inputs Program Example E–54

Appendix F: PLC Memory

DL05 PLC Memory F-2
Non-volatile V-memory in the DL05 . . . . . F-3

Appendix G: ASCII Table

ASCII Table **G–2**

Appendix H: Product Weights

Product Weight Table **H–2**

Appendix I: Numbering Systems

Introduction **I–2**
Binary Numbering System **I–2**
Hexadecimal Numbering System **I–3**
Octal Numbering System **I–4**
Binary Coded Decimal (BCD) Numbering System **I–5**
Real (Floating Point) Numbering System **I–5**
BCD/Binary/Decimal/Hex/Octal -What is the Difference? **I–6**
Data Type Mismatch **I–7**
Signed vs. Unsigned Integers **I–8**
AutomationDirect.com Products and Data Types **I–9**
*Direct*LOGIC PLCs I–9
C-more/C-more Micro-Graphic Panels I–9

Appendix J: European Union Directives (CE)

European Union (EU) Directives **J–2**
Member Countries J–2
Applicable Directives J–2
Compliance J–2
General Safety J–3
Special Installation Manual J–4
Other Sources of Information J–4
Basic EMC Installation Guidelines **J–5**
Enclosures J–5
AC Mains Filters J–5
Suppression and Fusing J–5

Internal Enclosure Grounding J–6
Equi–potential Grounding J–6
Communications and Shielded Cables J–6
Analog and RS232 Cables J–7
Multidrop Cables J–7
Shielded Cables within Enclosures J–8
Analog Modules and RF Interference J–8
Network Isolation J–8
DC Powered Versions J–9
Items Specific to the DL05 . . . . . J–9

Appendix K: Introduction to Serial Communications

Introduction to Serial Communications **K–2**
Wiring Standards K–2
Communications Protocols K–4
DL05 Port Specifications K–5
DL05 Port Pinouts K–5
Port Setup Using *Direct*SOFT 5 or Ladder Logic Instructions K–6
Port 2 Setup for RLL Using K-Sequence, *Direct*NET or Modbus RTU K–7
Port 2 Setup for RLL Using ASCII K–8
K-Sequence Communications K–10
*Direct*NET Communications K–10
Step 1: Identify Master Port # and Slave # K–10
Step 2: Load Number of Bytes to Transfer K–10
Step 3: Specify Master Memory Area K–11
Step 4: Specify Slave Memory Area K–12
Communications from a Ladder Program K–13
Multiple Read and Write Interlocks K–13
Modbus RTU Communications K–14

Index

Notes

Drum Instruction Programming

Chapter 6

In This Chapter:

DL05 Drum Introduction 6–2
Step Transitions 6–4
Overview of Drum Operation 6–8
Drum Control Techniques 6–10
Drum Instruction 6–12
Event Drum (EDRUM) Instruction 6–14

DL05 Drum Introduction

Purpose

The Drum (DRUM) instruction in the DL05 CPU electronically simulates an electro-mechanical drum sequencer. The instruction offers enhancements to the basic principle, which we describe first.

Drum Terminology

Drum instructions are best suited for repetitive processes that consist of a finite number of steps. They can do the work of many rungs of ladder logic with elegant simplicity. Therefore, drums can save a lot of programming and debugging time.

We introduce some terminology associated with the **drum** instruction by describing the original mechanical drum shown below. The mechanical drum generally has pegs on its curved surface. The pegs are populated in a particular **pattern**, representing a set of desired actions for machine control. A motor or solenoid rotates the drum a precise amount at specific times. During rotation, stationary wipers sense the presence of pegs (present = on, absent = off). This interaction makes or breaks electrical contact with the wipers, creating electrical **outputs** from the drum. The outputs are wired to devices on a machine for On/Off control.

Drums usually have a finite number of positions within one rotation, called **steps**. Each step represents some process step. At powerup, the drum **resets** to a particular step. The drum rotates from one step to the next based on a **timer**, or on some external **event**. During special conditions, a machine operator can manually increment the drum step using a **jog** control on the drum's drive mechanism. The contact closure of each wiper generates a unique on/off pattern called a **sequence**, designed for controlling a specific machine. Because the drum is circular, it automatically repeats the sequence once per rotation. Applications vary greatly, and a particular drum may rotate once per second, or as slowly as once per week.

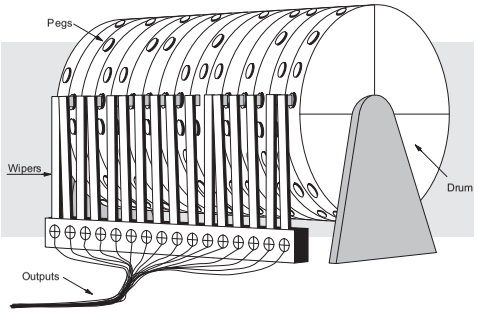

Electronic drums provide the benefits of mechanical drums and more. For example, they have a **preset** feature that is impossible for mechanical drums: The preset function lets you move from the present step *directly* to any other step on command!

Drum Chart Representation

For editing purposes, the electronic drum is presented in chart form in *Direct*SOFT 5 and in this manual. Imagine slicing the surface of a hollow drum cylinder between two rows of pegs, then pressing it flat. Now you can view the drum as a chart as shown below. Each row represents a step, numbered 1 through 16. Each column represents an output, numbered 0 through 15 (to match word bit numbering). The solid circles in the chart represent pegs (On state) in the mechanical drum, and the open circles are empty peg sites (Off state).

	OUTPUTS															
STEP	15	14	13	12	11	10	9	8	7	6	5	4	3	2	1	0
1	○	●	○	●	○	○	●	○	○	○	●	○	○	●	○	○
2	○	●	○	●	●	○	●	○	○	○	○	●	○	○	●	○
3	○	●	●	●	●	○	●	●	○	○	○	○	○	○	○	○
4	●	●	●	●	●	○	●	○	●	○	○	○	○	○	○	●
5	○	○	○	●	○	○	●	○	●	○	●	○	●	○	○	●
6	○	○	○	●	○	○	●	○	●	○	●	○	●	●	○	●
7	●	●	○	●	○	○	●	●	●	●	○	●	●	●	○	●
8	●	○	●	○	○	●	○	●	●	○	○	○	●	○	○	●
9	○	○	○	○	○	○	○	●	●	○	○	○	●	○	○	○
10	○	○	○	○	○	○	○	●	●	●	○	○	○	○	○	○
11	●	○	○	○	●	○	○	○	○	●	○	○	○	○	●	○
12	○	●	○	○	●	●	○	○	●	○	●	●	○	●	●	○
13	○	○	●	○	○	○	○	○	○	○	○	●	●	○	●	○
14	○	○	○	○	○	○	○	●	○	○	○	●	●	○	●	●
15	●	○	○	○	○	●	○	●	○	●	○	●	○	○	●	●
16	○	○	●	○	○	○	○	●	○	●	○	●	●	○	○	●

Output Sequences

The mechanical drum sequencer derives its name from sequences of control changes on its electrical outputs. The following figure shows the sequence of On/Off controls generated by the drum pattern above. Compare the two, and you will find that they are equivalent! If you can see their equivalence, you are well on your way to understanding drum instruction operation.

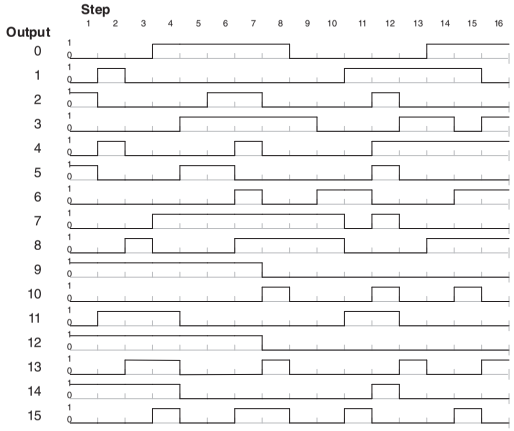

Step Transitions

Drum Instruction Types

There are two types of Drum instructions in the DL05 CPU:

- Timed Drum with Discrete Outputs (DRUM)
- Time and Event Drum with Discrete Outputs (EDRUM)

The two drum instructions include time-based step transitions, and the EDRUM includes event-based transitions as well. Each drum has 16 steps, and each step has 16 outputs. Refer to the figure below. Each output can be either a Y or C coil, offering programming flexibility. We assign Step 1 an arbitrary unique output pattern.

Timer-Only Transitions

Drums move from one step to another based on time and/or an external event (input). Each step has its own transition condition which you assign during the drum instruction entry. The figure below shows how timer-only transitions work.

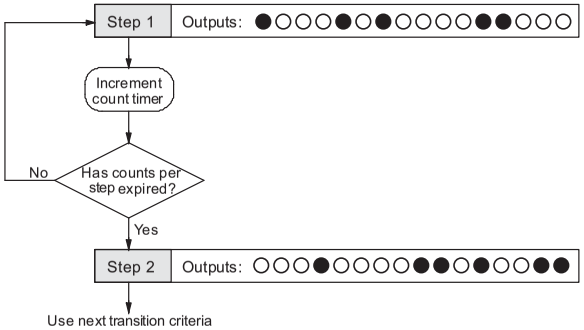

The drum stays in Step 1 for a specific duration (user-programmable). The timebase of the timer is programmable, from 0.01 seconds to 99.99 seconds. This establishes the resolution, or the duration of each "tick of the clock". Each step uses the same timebase, but has its own unique counts per step, which you program. When the counts for Step 1 have expired, then the drum moves to Step 2. The outputs change immediately to match the new pattern for Step 2.

The drum spends a specific amount of time in each step, given by the formula:

Time in step = 0.01 seconds X Timebase x Counts per step

For example, if you program a 5 second time base and 12 counts for Step 1, then the drum will spend 60 seconds in Step 1. The maximum time for any step is given by the formula:

Max Time per step = 0.01 seconds X 9999 X 9999

= 999,800 seconds = 277.7 hours = 11.6 days

NOTE: When first choosing the timebase resolution, a good rule of thumb is to make it about 1/10 the duration of the shortest step in your drum. Then you will be able to optimize the duration of that step in 10% increments. Other steps with longer durations allow optimizing by even smaller increments (percentage-wise). Also, note that the drum instruction executes once per CPU scan. Therefore, it is pointless to specify a drum timebase that is much faster than the CPU scan time.

Timer and Event Transitions

Step transitions may also occur based on time and/or external events. The figure below shows how step transitions work in these cases.

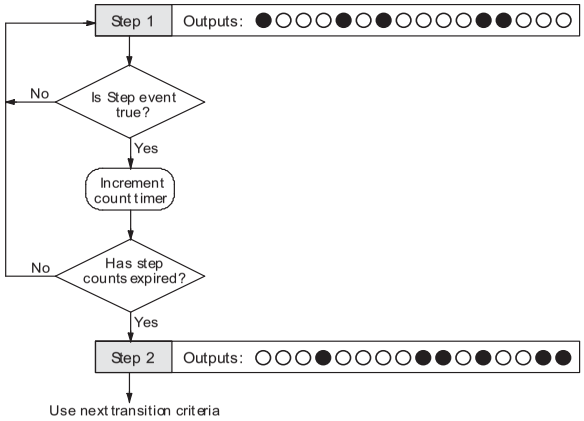

When the drum enters Step 1, it sets the output pattern as shown. Then it begins polling the external input programmed for that step. You can define event inputs as X, Y, or C discrete point types. Suppose we select X0 for the Step 1 event input. If X0 is off, then the drum remains in Step 1. When X0 is On, the event criteria is met and the timer increments. The timer increments as long as the event (X0) remains true. When the counts for Step 1 have expired, then the drum moves to Step . The outputs change immediately to match the new pattern for Step 2.

Event-Only Transitions

Step transitions do not require both the event and the timer criteria programmed for each step. You have the option of programming just one of the two, and even mixing transition types among all the steps of the drum. For example, you might want Step 1 to transition on an event, Step 2 to transition on time only, and Step 3 to transition on both time and an event. Furthermore, you may elect to use only part of the 16 steps, and only part of the 16 outputs.

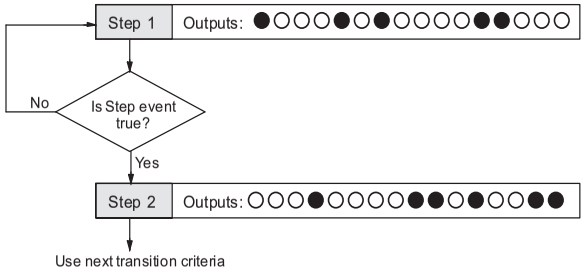

Counter Assignments

Each drum instruction uses the resources of four counters in the CPU. When programming the drum instruction, you select the first counter number. The drum also uses the next three counters automatically. The counter bit associated with the first counter turns on when the drum has completed its cycle, going off when the drum is reset. These counter values and the counter bit precisely indicate the progress of the drum instruction, and can be monitored by your ladder program.

Suppose we program a timer drum to have 8 steps, and we select CT10 for the counter number (remember, counter numbering is in octal). Counter usage is shown to the right. The right column holds typical values, interpreted below.

Counter Assignments			
CT10	Counts in step	V1010	1528
CT11	Timer Value	V1011	0200
CT12	Preset Step	V1012	0001
CT13	Current Step	V1013	0004

CT10 shows that we are at the 1528th count in the current step, which is step 4 (shown in CT13). If we have programmed step 4 to have 3000 counts, then the step is just over half completed. CT11 is the count timer, shown in units of 0.01 seconds. So, each least-significant-digit change represents 0.01 seconds. The value of 200 means that we have been in the current count (1528) for 2 seconds (0.01 x 100). Finally, CT12 holds the preset step value which was programmed into the drum instruction. When the drum's Reset input is active, it presets to step 1 in this case. The value of CT12 changes only if the ladder program writes to it, or the drum instruction is edited and the program is restarted. Counter bit CT10 turns on when the drum cycle is complete, and turns off when the drum is reset.

Last Step Completion

The last step in a drum sequence may be any step number, since partial drums are valid. Refer to the following figure. When the transition conditions of the last step are met, the drum sets the counter bit corresponding to the counter named in the drum instruction box (such as CT0). Then it moves to a final "drum complete" state. The drum outputs remain in the pattern defined for the last step. Having finished a drum cycle, the Start and Jog inputs have no effect at this point. The drum leaves the "drum complete" state when the Reset input becomes active (or on a program-to–run mode transition). It resets the drum complete bit (such as CT0), and then goes directly to the appropriate step number defined as the preset step.

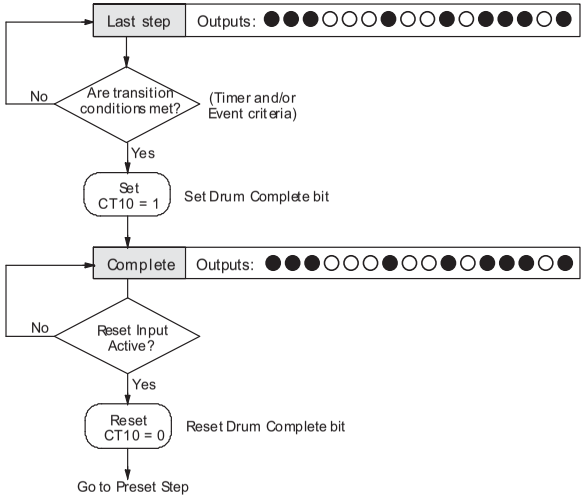

Overview of Drum Operation

Drum Instruction Block Diagram

The drum instruction utilizes various inputs and outputs in addition to the drum pattern itself. Refer to the figure below.

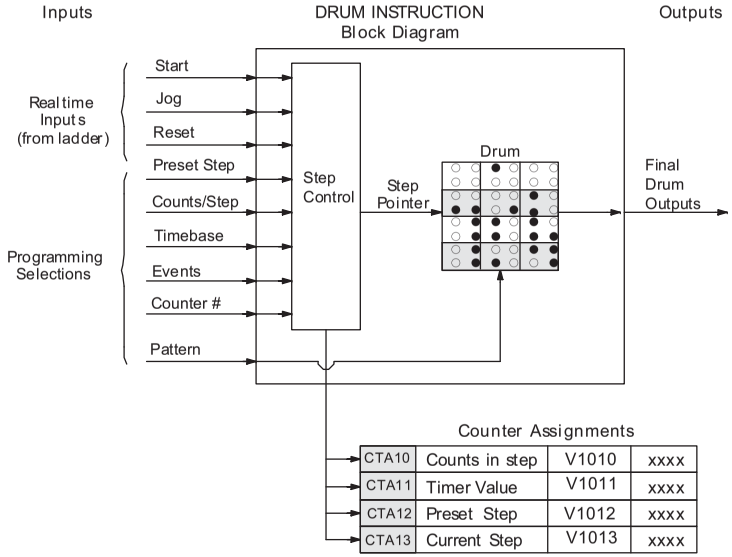

The drum instruction accepts several inputs for step control, the main control of the drum. The inputs and their functions are:

- **Start** – The Start input is effective only when Reset is off. When Start is on, the drum timer runs if it is in a timed transition, and the drum looks for the input event during event transitions. When Start is off, the drum freezes in its current state (Reset must remain off), and the drum outputs maintain their current on/off pattern.
- **Jog** – The jog input is only effective when Reset is off (Start may be either on or off). The jog input increments the drum to the next step on each off-to-on transition (only EDRUM supports the jog input).
- **Reset** – The Reset input has priority over the Start input. When Reset is on, the drum moves to its preset step. When Reset is off, then the Start input operates normally.
- **Preset Step** – A step number from 1 to 16 that you define (typically is step 1). The drum moves to this step whenever Reset is on, and whenever the CPU first enters run mode.

- **Counts/Step** – The number of timer counts the drum spends in each step. Each step has its own counts parameter. However, programming the counts/step is optional.
- **Timer Value** – the current value of the counts/step timer.
- **Counter #** – The counter number specifies the first of four consecutive counters which the drum uses for step control. You can monitor these to determine the drum's progress through its control cycle. The DL05 has 128 counters (CT0 – CT177 in octal).
- **Events** – Either an X, Y, C, S, T, or CT type discrete point serves as step transition inputs. Each step has its own event. However, programming the event is optional.

WARNING: The outputs of a drum are enabled any time the CPU is in Run Mode. The Start Input does not have to be on, and the Reset input does not disable the outputs. Upon entering Run Mode, drum outputs automatically turn on or off according to the pattern of the current step of the drum. This initial step number depends on the counter memory configuration: non-retentive versus retentive.

Powerup State of Drum Registers

The choice of the starting step on powerup and program-to-run mode transitions are important to consider for your application. Please refer to the following chart. If the counter memory is configured as non-retentive, the drum is initialized the same way on every

Counter Number	Function	Initialization on Powerup	
		Non-Retentive Case	Retentive Case
CT(n)	Current Step Count	Initialize = 0	Use Previous (no change)
CT(n + 1)	Counter Timer Value	Initialize = 0	Use Previous (no change)
CT(n + 2)	Preset Step	Initialize = Preset Step #	Use Previous (no change)
CT(n + 3)	Current Step #	Initialize = Preset Step #	Use Previous (no change)

powerup or program-to-run mode transition. However, if the counter memory is configured to be retentive, the drum will stay in its previous state.

Applications with relatively fast drum cycle times typically will need to be reset on powerup, using the non-retentive option. Applications with relatively long drum cycle times may need to resume at the previous point where operations stopped, using the retentive case. The default option is the retentive case. This means that if you initialize scratchpad V-memory, the memory will be retentive.

Drum Control Techniques

Drum Control Inputs

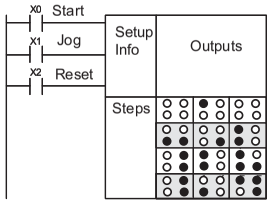

Now we are ready to put together the concepts on the previous pages and demonstrate general control of the drum instruction box. The drawing to the right shows a simplified generic drum instruction. Inputs from ladder logic control the Start, Jog, and Reset Inputs (only the EDRUM instruction supports the Jog Input). The first counter bit of the drum (CT0, for example) indicates the drum cycle is done.

The timing diagram below shows an arbitrary timer drum input sequence and how the drum responds. As the CPU enters Run mode it initializes the step number to the preset step number (typically it is Step 1). When the Start input turns on the drum begins running, waiting for an event and/or running the timer (depends on the setup).

After the drum enters Step 2, Reset turns On while Start is still On. Since Reset has priority over Start, the drum goes to the preset step (Step 1). Note that the drum is *held* in the preset step during Reset, and that step does *not run* (respond to events or run the timer) until Reset turns off.

After the drum has entered step 3, the Start input goes off momentarily, halting the drum's timer until Start turns on again.

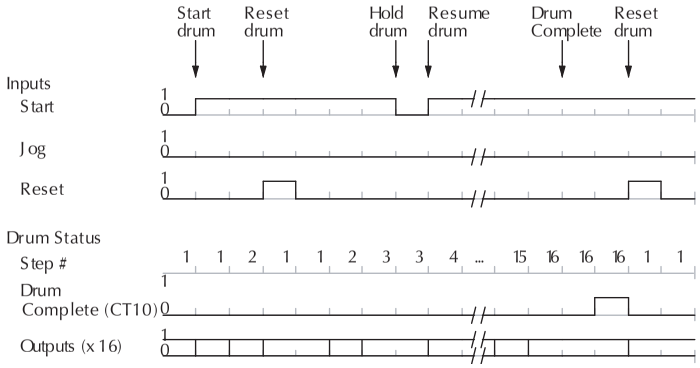

When the drum completes the last step (Step 16 in this example), the Drum Complete bit (CT0) turns on, and the step number remains at 16. When the Reset input turns on, it turns off the Drum Complete bit (CT0), and forces the drum to enter the preset step.

NOTE: The timing diagram shows all steps using equal time durations. Step times can vary greatly, depending on the counts/step programmed.

In the figure below, we focus on how the Jog input works on event drums. To the left of the diagram, note that the off-to-on transitions of the Jog input increments the step. Start may be either on or off (however, Reset must be off). Two jogs takes the drum to step three. Next, the Start input turns on, and the drum begins running normally. During step 6 another Jog input signal occurs. This increments the drum to step 7, setting the timer to 0. The drum begins running immediately in step 7, because Start is already on. The drum advances to step 8 normally.

As the drum enters step 14, the Start input turns off. Two more Jog signals moves the drum to step 16. However, note that a third Jog signal is required to move the drum through step 16 to "drum complete". Finally, a Reset input signal arrives which forces the drum into the preset step and turns off the drum complete bit.

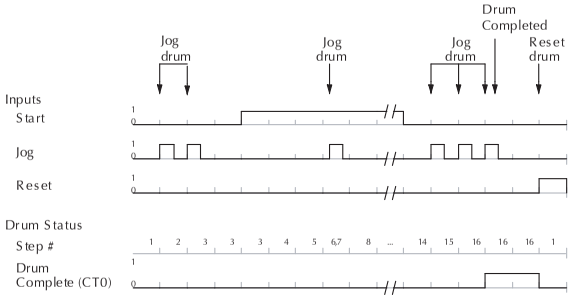

Self-Resetting Drum

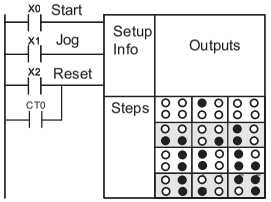

Applications often require drums that automatically start over once they complete a cycle. This is easily accomplished, using the drum complete bit. In the figure to the right, the drum instruction setup is for CT0, so we logically OR the drum complete bit (CT0) with the Reset input. When the last step is done, the drum turns on CT0 which resets itself to the preset step, also resetting CT0. Contact X2 still works as a manual reset.

Initializing Drum Outputs

The outputs of a drum are enabled any time the CPU is in run mode. On program-to-run mode transitions, the drum goes to the preset step, and the outputs energize according to the pattern of that step. If your application requires all outputs to be off at powerup, make the preset step in the drum a "reset step", with all outputs off.

Using Complex Event Step Transitions

Each event-based transition accepts only one contact reference for the event. However, this does not limit events to just one contact. Just use a control relay contact such as C0 for the step transition event. Elsewhere in ladder logic, you may use C0 as an output coil, making it dependent on many other "events" (contacts).

Drum Instruction

The DL05 drum instructions may be programmed using *Direct*SOFT 5 or for the EDRUM instruction only you can use a handheld programmer (firmware version v1.8 or later. This section covers entry using *Direct*SOFT 5 for all instructions plus the handheld mnemonics for the EDRUM instruction.

Timed Drum with Discrete Outputs (DRUM)

The Timed Drum with Discrete Outputs is the most basic of the DL05's drum instructions. It operates according to the principles covered on the previous pages. Below is a diagram of the instruction in chart form as displayed by *Direct*SOFT 5.

*Direct*SOFT 5 Display

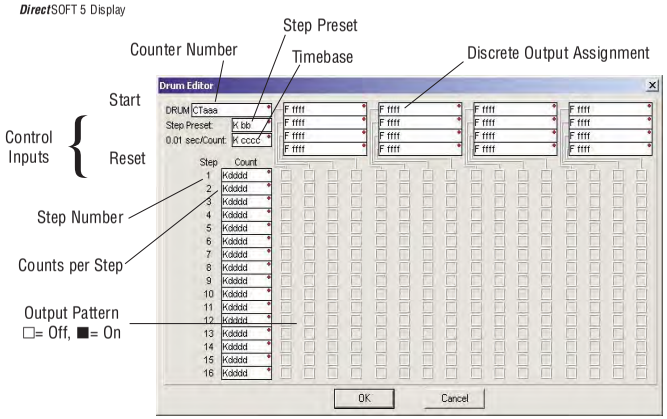

The Timed Drum features 16 steps and 16 outputs. Step transitions occur only on a timed basis, specified in counts per step. Unused steps must be programmed with "counts per step" = 0 (this is the default entry). The discrete output points may be individually assigned as X, Y, or C types, or may be left unused. The output pattern may be edited graphically with *Direct*SOFT 5.

Whenever the Start input is energized, the drum's timer is enabled. It stops when the last step is complete, or when the Reset input is energized. The drum enters the preset step chosen upon a CPU program-to-run mode transition, and whenever the Reset input is energized.

Drum Parameters	Field	Data Types	Ranges
Counter Number	aaa		0 --174
Preset Step	bb	K	1 -- 16
Timer base	cccc	K	0 -- 99.99 seconds
Counts per step	dddd	K	0 -- 9999
Discrete Outputs	Fffff	X, Y, C	See page 4 -- 28

Drum instructions use four counters in the CPU. The ladder program can read the counter values for the drum's status. The ladder program may write a new preset step number to CT(n+2) at any time. However, the other counters are for monitoring purposes only.

Counter Number	Ranges of (n)	Function	Counter Bit Function
CT(n)	0 -- 174	Counts in step	CTn = Drum Complete
CT(n+1)	1 -- 175	Timer value	CT(n+1) = (not used)
CT(n+2)	2 -- 176	Preset Step	CT(n+2) = (not used)
CT(n+3)	3 -- 177	Current Step	CT(n+3) = (not used)

The following ladder program shows the DRUM instruction in a typical ladder program, as shown by *Direct*SOFT 5. Steps 1 through 10 are used, and twelve of the sixteen output points are used. The preset step is step 1. The timebase runs at (K10 x 0.01) = 0.1 second per count. Therefore, the duration of step 1 is (25 x 0.1) = 2.5 seconds. In the last rung, the Drum Complete bit (CT0) turns on output Y0 upon completion of the last step (step 10).

A drum reset also resets CT0.

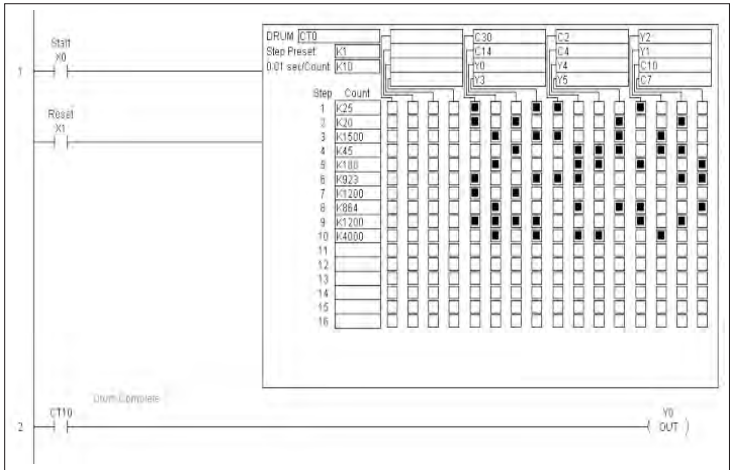

*Direct*SOFT 5 Display

Event Drum (EDRUM) Instruction

The Event Drum (EDRUM) features time-based and event-based step transitions. It operates according to the general principles of drum operation covered in the beginning of this chapter. Below is a diagram representing the instruction as displayed by *Direct*SOFT 5.

*Direct*SOFT 5 Display

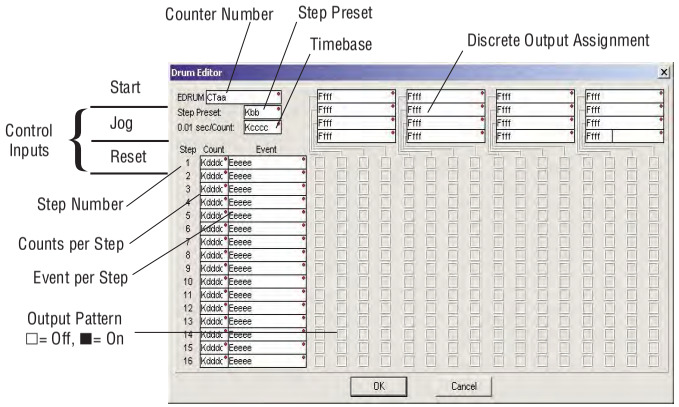

The Event Drum features 16 steps and 16 discrete outputs. Step transitions occur on timed and/or event basis. The jog input also advances the step on each off-to-on transition. Time is specified in counts per step, and events are specified as discrete contacts. Unused steps and events must be left blank. The discrete output points may be individually assigned.

Whenever the Start input is energized, the drum's timer is enabled. As long as the event is true for the current step, the timer runs during that step. When the step count equals the counts per step, the drum transitions to the next step. This process stops when the last step is complete, or when the Reset input is energized. The drum enters the preset step chosen upon a CPU program-to-run mode transition, and whenever the Reset input is energized.

Drum Parameters	Field	Data Types	Ranges
Counter Number	aa	--	0 -- 174
Preset Step	bb	K	1 -- 16
Timer base	cccc	K	0 -- 99.99 seconds
Counts per step	dddd	K	0 -- 9999
Event	eeee	X, Y, C, S, T, CT	see page 4 -- 28
Discrete Outputs	ffff	X, Y, C	see page 4 -- 28

Drum instructions use four counters in the CPU. The ladder program can read the counter values for the drum's status. The ladder program may write a new preset step number to CT(n+2) at any time. However, the other counters are for monitoring purposes only.

Counter Number	Ranges of (n)	Function	Counter Bit Function
CT(n)	0 -- 174	Counts in step	CTn = Drum Complete
C(n+1)	1 -- 175	Timer value	CT(n+1) = (not used)
CT(n+2)	2 -- 176	Preset Step	CT(n+2) = (not used)
CT(n+3)	3 -- 177	Current Step	CT(n+3) = (not used)

The following ladder program shows the EDRUM instruction in a typical ladder program, as shown by *Direct*SOFT 5. Steps 1 through 11 are used, and all sixteen output points are used. The preset step is step 1. The timebase runs at (K10 x 0.01) = 0.1 second per count. Therefore, the duration of step 1 is (1 x 0.1) = 0.1 second. Note that step 1 is time-based only (event is left blank). And, the output pattern for step 1 programs all outputs off, which is a typically desirable powerup condition. In the last rung, the Drum Complete bit (CT4) turns on output Y0 upon completion of the last step (step 11). A drum reset also resets CT4.

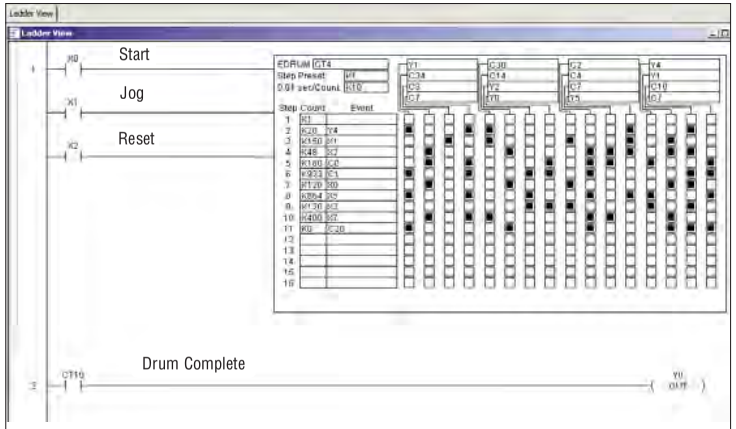

*Direct*SOFT 5 Display

Program Using the Handheld Programmer

The EDRUM instruction may be programmed using either *Direct*SOFT 5 or a handheld programmer. This section covers entry via the handheld programmer (Refer to the *Direct*SOFT 5 manual for drum instruction entry using that tool).

First, enter Store instructions for the ladder rungs controlling the drum's ladder inputs. In the example to the right, the timer drum's Start, Jog, and Reset inputs are controlled by X0, X1 and X2 respectively. The required keystrokes are listed beside the mnemonic.

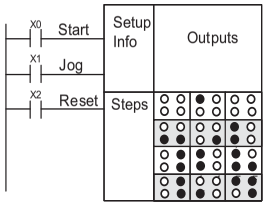

These keystrokes precede the EDRUM instruction mnemonic. Note that the ladder rungs for Start, Jog, and Reset inputs are not limited to being single–contact rungs.

After the Store instructions, enter the EDRUM (using Counter CT0) as shown:

Handheld Programmer Keystrokes

Store X0 [$ STR] [→] [A 0] [ENT]

(Repeat for Store X1 and Store X2)

Handheld Programmer Keystrokes

EDRUM CNT0 [SHFT] [E 4] [D 3] [R ORN] [U ISG] [M ORST] [→] [A 0] [ENT]

After entering the EDRUM mnemonic as above, the handheld programmer creates an input form for all the drum parameters. The input form consists of approximately fifty or more default mnemonic entries containing DEF (define) statements. The default mnemonics are already "input" for you, so they appear automatically. Use the NXT and PREV keys to move forward and backward through the form. Only the editing of default values is required, thus eliminating many keystrokes. The entries required for the basic timer drum are in the chart below.

NOTE: Default entries for output points and events are "DEF 0000", which means they are unassigned. If you need to go back and change an assigned output as unused again, enter "K0000". The entry will again show as "DEF 0000".

Drum Parameters	Multiple Entries	Mnemonic/Entry	Default Mnemonic	Valid Data Types	Ranges
Start Input	--	STR (plus input rung)	--	--	--
Jog Input	--	STR (plus input rung)	--	--	--
Reset Input	--	STR (plus input rung)	--	--	--
Drum Mnemonic	--	DRUM CNT aa	--	CT	0 -- 174
Preset Step	1	bb	DEF K0000	K	1 -- 16
Timer base	1	cccc	DEF K0000	K	1 -- 9999
Output points	16	ffff	DEF 0000	X, Y, C	see page 4 -- 28
Counts per step	16	dddd	DEF K0000	K	0 -- 9999
Events	16	dddd	DEF K0000	X, Y, C, S, T, CT	see page 4 -- 28
Output pattern	16	gggg	DEF K0000	K	0 -- FFFF

Using the DRUM entry chart (two pages before), we show the method of entry for the basic time/event drum instruction. First, we convert the output pattern for each step to the equivalent hex number, as shown in the following example.

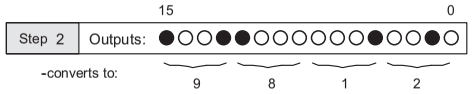

The following diagram shows the method for entering the previous EDRUM example on the HHP. The default entries of the form are in parenthesis. After the drum instruction entry (on the fourth row), the remaining keystrokes over-write the numeric portion of each default DEF statement.

NOTE: Drum editing requires Handheld Programmer firmware version 1.7 or later.

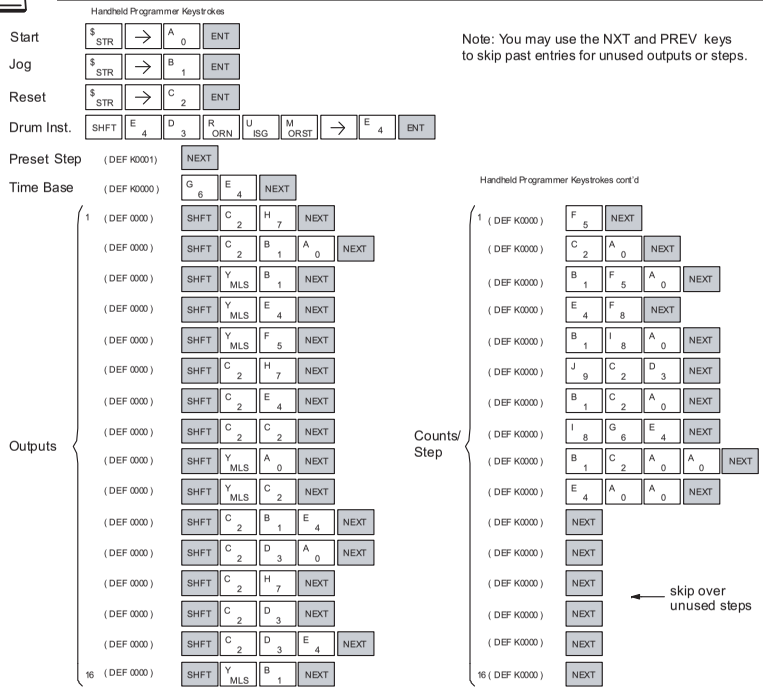

(Continued on next page)

NOTE: You may use the NXT and PREV keys to skip past entries for unused outputs or steps.

Handheld Programmer Keystrokes cont'd

Outputs

1	(DEF 0000)	NEXT	← skip over unused event			
	(DEF 0000)	SHFT	Y MLS	E 4	NEXT	
	(DEF 0000)	SHFT	X SET	B 1	NEXT	
	(DEF 0000)	SHFT	X SET	C 2	NEXT	
	(DEF 0000)	SHFT	C 2	A 0	NEXT	
	(DEF 0000)	SHFT	C 2	B 1	NEXT	
	(DEF 0000)	SHFT	X SET	A 0	NEXT	
	(DEF 0000)	SHFT	X SET	F 5	NEXT	
	(DEF 0000)	SHFT	X SET	D 3	NEXT	
	(DEF 0000)	SHFT	Y MLS	H 7	NEXT	
	(DEF 0000)	SHFT	C 2	C 2	A 0	NEXT
	(DEF 0000)	NEXT				
	(DEF 0000)	NEXT				
	(DEF 0000)	NEXT				
	(DEF 0000)	NEXT				
16	(DEF 0000)	NEXT				

Handheld Programmer Keystrokes cont'd

Output Pattern

1	(DEF K0000)	NEXT	← step 1 pattern = 000			
	(DEF K0000)	J 9	I 8	B 1	C 2	NEXT
	(DEF K0000)	C 2	I 8	J 9	E 4	NEXT
	(DEF K0000)	E 4	E 4	H 7	G 6	NEXT
	(DEF K0000)	F 5	B 1	G 6	J 9	NEXT
	(DEF K0000)	J 9	D 3	E 4	D 3	NEXT
	(DEF K0000)	E 4	E 4	I 8	G 6	NEXT
	(DEF K0000)	J 9	E 4	F 5	J 9	NEXT
	(DEF K0000)	D 3	I 8	SHFT	A 0	NEXT
	(DEF K0000)	F 5	I 8	G 6	E 4	NEXT
	(DEF K0000)	I 8	E 4	E 4	H 7	NEXT
	(DEF K0000)	NEXT				
	(DEF K0000)	NEXT				
	(DEF K0000)	NEXT	← unused steps			
	(DEF K0000)	NEXT				
16	(DEF K0000)	NEXT				

Last rung

$ STR	GY CNT	E 4	NEXT
SHFT	Y MLS	A 0	NEXT

NOTE: You may use the NXT and PREV keys to skip past entries for unused outputs or steps.

RLL^PLUS^ Stage Programming

CHAPTER 7

In This Chapter:

Introduction to Stage Programming 7–2
Learning to Draw State Transition Diagrams 7–3
Using the Stage Jump Instruction for State Transitions 7–7
Stage Program Example: Toggle On/Off Lamp Controller 7–8
Four Steps to Writing a Stage Program 7–9
Stage Program Example: A Garage Door Opener 7–10
Stage Program Design Considerations 7–15
Parallel Processing Concepts 7–19
RLL^PLUS^ (Stage) Instructions 7–21
Questions and Answers about Stage Programming 7–25

Introduction to Stage Programming

Stage Programming provides a way to organize and program complex applications with relative ease, when compared to purely relay ladder logic (RLL) solutions. Stage programming does not replace or negate the use of traditional boolean ladder programming. This is why Stage Programming is also called RLL^{PLUS}. You won't have to discard any training or experience you already have. Stage programming simply allows you to divide and organize a RLL program into groups of ladder instructions called stages. This allows quicker and more intuitive ladder program development than traditional RLL alone provides.

Overcoming "Stage Fright"

Many PLC programmers in the industry have become comfortable using RLL for every PLC program they write... but often remain skeptical or even fearful of learning new techniques such as stage programming. While RLL is great at solving boolean logic relationships, it has disadvantages as well:

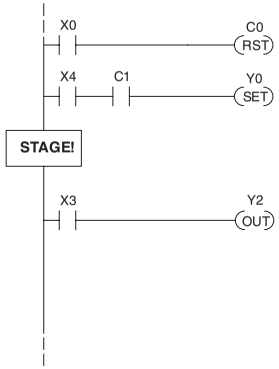

- Large programs can become almost unmanageable, because of a lack of structure.
- In RLL, latches must be tediously created from self-latching relays.
- When a process gets stuck, it is difficult to find the rung where the error occurred.
- Programs become difficult to modify later, because they do not intuitively resemble the application problem they are solving.

It's easy to see that these inefficiencies consume a lot of additional time, and time is money. *Stage programming overcomes these obstacles!* We believe a few moments of studying the stage concept is one of the greatest investments in programming speed and efficiency a PLC programmer can make!

So, we encourage you to study stage programming and add it to your "toolbox" of programming techniques. This chapter is designed as a self-paced tutorial on stage programming. For best results:

- Start at the beginning and do not skip over any sections.
- Study each stage programming concept by working through each example. The examples build progressively on each other.
- Read the Stage Questions and Answers at the end of the chapter for a quick review.

Learning to Draw State Transition Diagrams

Introduction to Process States

Those familiar with ladder program execution know that the CPU must scan the ladder program repeatedly, over and over. Its three basic steps are:

1. Read the inputs
2. Execute the ladder program
3. Write the outputs

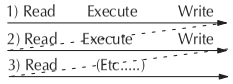

The benefit is that a change at the inputs can affect the outputs in just a few milliseconds.

Most manufacturing processes consist of a series of activities or conditions , each lasting for several seconds, minutes, or even hours. We might call these "process states", which are either active or inactive at any particular time. A challenge for RLL programs is that a particular input event may last for just a brief instant. We typically create latching relays in RLL to preserve the input event in order to maintain a process state for the required duration.

We can organize and divide ladder logic into sections called "stages", representing process states. But before we describe stages in detail, we will reveal **the secret to understanding stage programming:** state transition diagrams.

The Need for State Diagrams

Sometimes we need to forget about the scan nature of PLCs, and focus our thinking toward the states of the process we need to identify. Clear thinking and concise analysis of an application gives us the best chance at writing efficient, bug-free programs. *State diagrams are just a tool to help us draw a picture of our process!* You'll discover that if we can get the picture right, **our program will also be right!**

A 2–State Process

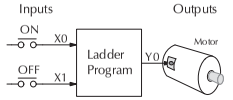

Consider the simple process shown to the right, which controls an industrial motor. We will use a green momentary SPST pushbutton to turn the motor on, and a red one to turn it off. The machine operator will press the appropriate pushbutton for just a second or so. The two states of our process are ON and OFF.

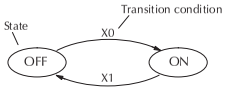

Output equation: Y0 = On

The next step is to draw a state transition diagram, as shown to the right. It shows the two states OFF and ON, with two transition lines in-between. When the event X0 is true, we transition from OFF to ON. When X1 is true, we transition from ON to OFF.

If you're following along, you are very close to grasping the concept and the problem-solving power of state transition diagrams. The output of our controller is Y0, which is true any time we are in the ON state. In a boolean sense, Y0=ON state.

Next, we will implement the state diagram first as RLL, then as a stage program. This will help you see the relationship between the two methods in problem solving.

The state transition diagram to the right is a picture of the solution we need to create. The beauty of it is this: it expresses the problem independently of the programming language we may use to realize it. In other words, *by drawing the diagram we have already solved the control problem!*

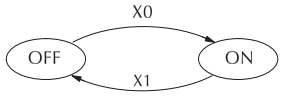

Output equation Y0 = ON

First, we'll translate the state diagram to traditional RLL. Then we'll show how easy it is to translate the diagram into a stage programming solution.

RLL Equivalent

The RLL solution is shown to the right. It consists of a self-latching control relay, C0. When the On pushbutton (X0) is pressed, output coil C0 turns on and the C0 contact on the second row latches itself on. So, X0 **sets the latch** C0 on, and it remains on after the X0 contact opens. The motor output Y0 also has power flow, so the motor is now on.

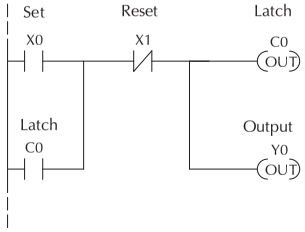

When the Off pushbutton (X1) is pressed, it opens the normally-closed X1 contact, which **resets the latch**. Motor output Y0 turns off when the latch coil C0 goes off.

Stage Equivalent

The stage program solution is shown to the right. The two inline stage boxes S0 and S1 correspond to the two states OFF and ON. The ladder rung(s) below each stage box belong to each respective stage. This means that the PLC only has to scan those rungs when the corresponding stage is active!

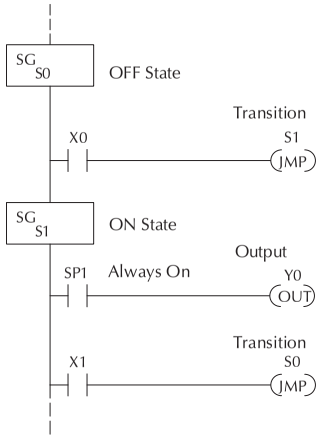

For now, let's assume we begin in the OFF State, so stage S0 is active. When the On pushbutton (X0) is pressed, a stage transition occurs. The JMP S1 instruction executes, which simply turns off the Stage bit S0 and turns on Stage bit S1. So on the next PLC scan, the CPU will not execute Stage S0, but will execute stage S1!

In the On State (Stage S1), we want the motor to always be on. The special relay contact SP1 is defined as always on, so Y0 turns the motor on.

When the Off pushbutton (X1) is pressed, a transition back to the Off State occurs. The JMP S0 instruction executes, which simply turns off the Stage bit S1 and turns on Stage bit S0. On the next PLC scan, the CPU will not execute Stage S1, so the motor output Y0 will turn off. The Off state (Stage 0) will be ready for the next cycle.

Let's Compare

Right now, you may be thinking "I don't see the big advantage to Stage Programming... in fact, the stage program is longer than the plain RLL program". Well, now is the time to exercise a bit of faith. As control problems grow in complexity, stage programming quickly out-performs RLL in simplicity, program size, etc.

For example, consider the diagram below. Notice how easy it is to correlate the OFF and ON states of the state transition diagram below to the stage program at the right. Now, we challenge anyone to easily identify the same states in the RLL program on the previous page!

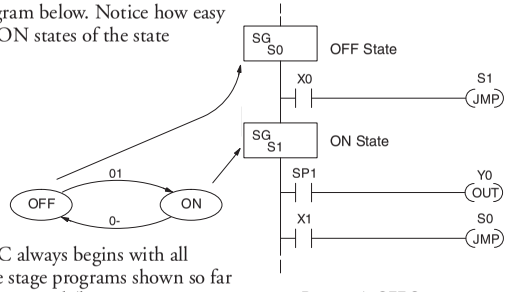

Initial Stages

At powerup and Program-to-Run Mode transitions, the PLC always begins with all normal stages (SG) off. So, the stage programs shown so far have actually had no way to get started (because rungs are not scanned unless their stage is active).

Assume that we want to always begin in the Off state (motor off), which is how the RLL program works. The Initial Stage (ISG) is defined to be active at powerup. In the modified program to the right, we have changed stage S0 to the ISG type. This ensures the PLC will scan contact X0 after powerup, because Stage S0 is active. **After powerup, an Initial Stage (ISG) works just like any other stage!**

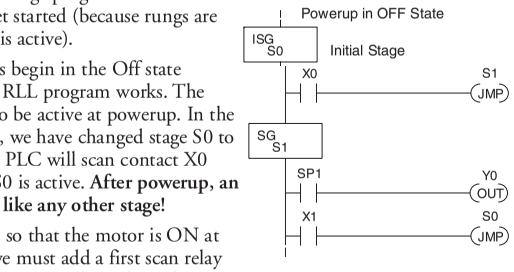

We can change both programs so that the motor is ON at powerup. In the RLL below, we must add a first scan relay SP0, latching C0 on. In the stage example to the right, we simply make Stage S1 an initial stage (ISG) instead of S0.

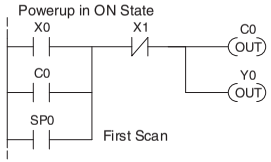

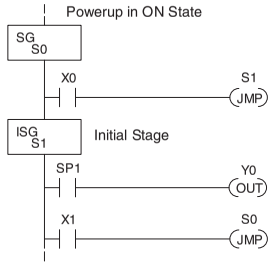

NOTE: If the ISG is within the retentive range for stages, the ISG will remain in the state it was in before power down and will NOT turn itself on during the first scan.

We can mark our desired powerup state as shown to the right, which helps us remember to use the appropriate Initial Stages when creating a stage program. It is permissible to have as many initial stages as the process requires.

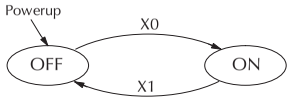

What Stage Bits Do

You may recall that a stage is just a section of ladder program which is either active or inactive at a given moment. All stage bits (S0 to S377) reside in the PLC's image register as individual status bits. Each stage bit is either a boolean 0 or 1 at any time.

Program execution always reads ladder rungs from top to bottom, and from left to right. The drawing below shows the effect of stage bit status. The ladder rungs below the stage instruction continuing until the next stage instruction or the end of program belong to stage 0. Its equivalent operation is shown on the right. When S0 is true, the two rungs have power flow.

- If Stage bit S0 = 0, its ladder rungs *are not scanned* (executed).
- If Stage bit S0 = 1, its ladder rungs are scanned (executed).

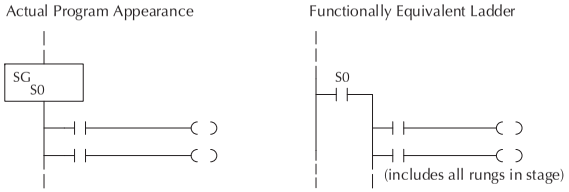

Stage Instruction Characteristics

The inline stage boxes on the left power rail divide the ladder program rungs into stages. Some stage rules are:

- **Execution** – Only logic in active stages are executed on any scan.
- **Transitions** – Stage transition instructions take effect on the next occurrence of the stages involved.
- **Octal numbering** – Stages are numbered in octal, like I/O points, etc. So "S8" is not valid.
- **Total Stages** – The DL05 offers up to 256 stages (S0 to S377 in octal).
- **No duplicates** – Each stage number is unique and can be used just once.
- **Any order** – You can skip numbers and sequence the stage numbers in any order.
- **Last Stage** – the last stage in the ladder program includes all rungs from its stage box until the end coil.

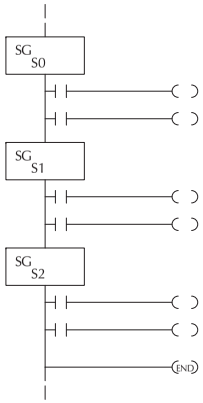

Using the Stage Jump Instruction for State Transitions

Stage Jump, Set, and Reset Instructions

The Stage JMP instruction we have used deactivates the stage in which the instruction occurs, while activating the stage in the JMP instruction. Refer to the state transition shown below. When contact X0 energizes, the state transition from S0 to S1 occurs. The two stage examples shown below are equivalent. So, the Stage Jump instruction is equal to a Stage Reset of the current stage, plus a Stage Set instruction for the stage to which we want to transition.

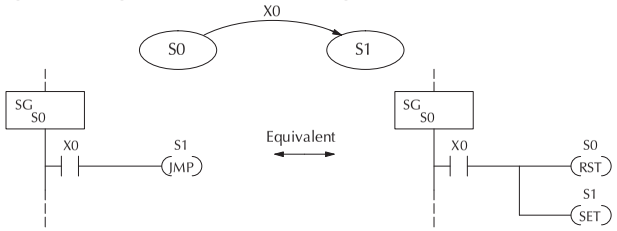

Please Read Carefully – The jump instruction is easily misunderstood. The "jump" does not occur immediately like a GOTO or GOSUB program control instruction when executed. Here's how it works:

- The jump instruction resets the stage bit of the stage in which it occurs. All rungs in the stage still finish executing during the current scan, *even if there are other rungs in the stage below the jump instruction!*
- The reset will be in effect on the following scan, so the stage that executed the jump instruction previously will be inactive and bypassed.
- The stage bit of the stage named in the Jump instruction will be set immediately, so the stage will be executed on its next occurrence. In the left program shown below, stage S1 executes during the same scan as the JMP S1 occurs in S0. In the example on the right, Stage S1 executes on the next scan after the JMP S1 executes, because stage S1 is located above stage S0.

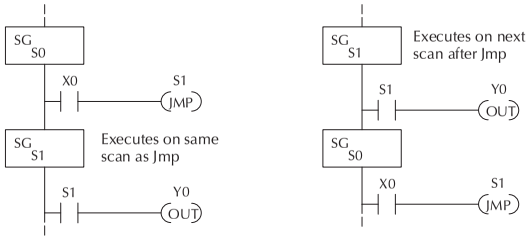

NOTE: Assume we start with Stage 0 active and stage 1 inactive for both examples.

Stage Program Example: Toggle On/Off Lamp Controller

A 4–State Process

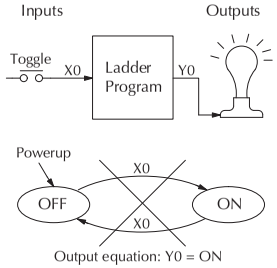

In the process shown to the right, we use an ordinary momentary pushbutton to control a light bulb. The ladder program will latch the switch input, so that we will push and release to turn on the light, push and release again to turn it off (sometimes called toggle function). Sure, we could just buy a mechanical switch with the alternate on/off action built in... However, this example is educational and also fun! Next we draw the state transition diagram.

A typical first approach is to use X0 for both transitions (like the example shown to the right). However, *this is incorrect* (please keep reading).

Note that this example differs from the motor example, because now we have just one pushbutton. When we press the pushbutton, both transition conditions are met. We would just transition around the state diagram at top speed. If implemented in Stage, this solution would flash the light on or off each scan (obviously undesirable)!

The solution is to make the push and the release of the pushbutton separate events. Refer to the new state transition diagram below. At powerup we enter the OFF state. When switch X0 is pressed, we enter the Press-ON state. When it is released, we enter the ON state. Note that X0 with the bar above it denotes X0 NOT.

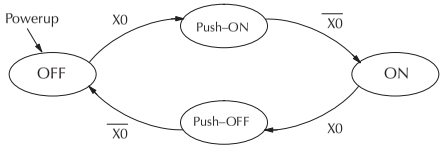

When in the ON state, another push and release cycle similarly takes us back to the OFF state. Now we have two unique states (OFF and ON) used when the pushbutton is released, which is what was required to solve the control problem.

The equivalent stage program is shown to the right. The desired powerup state is OFF, so we make S0 an initial stage (ISG). In the ON state, we add special relay contact SP1, which is always on.

Note that even as our programs grow more complex, it is still easy to correlate the state transition diagram with the stage program!

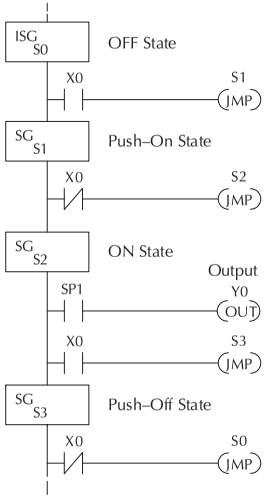

Four Steps to Writing a Stage Program

By now, you've probably noticed that we follow the same steps to solve each example problem. The steps will probably come to you automatically if you work through all the examples in this chapter. It's helpful to have a checklist to guide us through the problem solving. The following steps summarize the stage program design procedure:

1. Write a Word Description of the application.

Describe all functions of the process in your own words. Start by listing what happens first, then next, etc. If you find there are too many things happening at once, try dividing the problem into more than one process. Remember, you can still have the processes communicate with each other to coordinate their overall activity.

2. Draw the Block Diagram.

Inputs represent all the information the process needs for decisions, and outputs connect to all devices controlled by the process.

- Make lists of inputs and outputs for the process.
- Assign I/O point numbers (X and Y) to physical inputs and outputs.

3. Draw the State Transition Diagram.

The state transition diagram describes the central function of the block diagram, reading inputs and generating outputs.

- Identify and name the states of the process.
- Identify the event(s) required for each transition between states.
- Ensure the process has a way to re-start itself, or is cyclical.
- Choose the powerup state for your process.
- Write the output equations.

4. Write the Stage Program.

Translate the state transition diagram into a stage program.

- Make each state a stage. Remember to number stages in octal. Up to 256 total stages are available in the DL05, numbered 0 to 377 in octal.
- Put transition logic inside the stage which originates each transition (the stage each arrow points away from).
- Use an initial stage (ISG) for any states that must be active at powerup.
- Place the outputs or actions in the appropriate stages.

You'll notice that Steps 1 through 3 just prepare us to write the stage program in Step 4. However, the program virtually writes itself because of the preparation beforehand. Soon you'll be able to start with a word description of an application and create a stage program in one easy session!

Stage Program Example: A Garage Door Opener

Garage Door Opener Example

In this next stage programming example we'll create a garage door opener controller. Hopefully most readers are familiar with this application, and we can have fun besides!

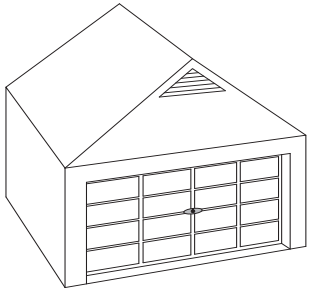

The first step we must take is to describe how the door opener works. We will start by achieving the basic operation, waiting to add extra features later. Stage programs are very easy to modify.

Our garage door controller has a motor which raises or lowers the door on command. The garage owner pushes and releases a momentary pushbutton once to raise the door. After the door is up, another push-release cycle will lower the door.

In order to identify the inputs and outputs of the system, it's sometimes helpful to sketch its main components, as shown in the door side view to the right. The door has an up limit and a down limit switch. Each limit switch closes only when the door has reach the end of travel in the corresponding direction. In the middle of travel, neither limit switch is closed.

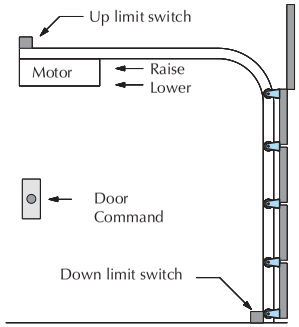

The motor has two command inputs: raise and lower. When neither input is active, the motor is stopped. The door command is just a simple pushbutton. Whether wall-mounted as shown, or a radio-remote control, all door control commands logical OR together as one pair of switch contacts.

Draw the Block Diagram

The block diagram of the controller is shown to the right. Input X0 is from the pushbutton door control. Input X1 energizes when the door reaches the full up position. Input X2 energizes when the door reaches the full down position. When the door is positioned between fully up or down, both limit switches are open.

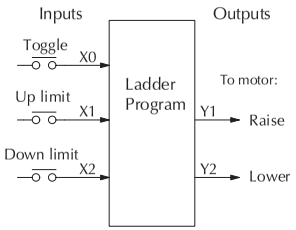

The controller has two outputs to drive the motor. Y1 is the up (raise the door) command, and Y2 is the down (lower the door) command.

Draw the State Diagram

Now we are ready to draw the state transition diagram. Like the previous light bulb controller example, this application also has just one switch for the command input. Refer to the figure below.

- When the door is down (DOWN state), nothing happens until X0 energizes. Its push and release brings us to the RAISE state, where output Y1 turns on and causes the motor to raise the door.
- We transition to the UP state when the up limit switch (X1) energizes, and turns off the motor.
- Then nothing happens until another X0 press-release cycle occurs. That takes us to the LOWER state, turning on output Y2 to command the motor to lower the door. We transition back to the DOWN state when the down limit switch (X2) energizes.

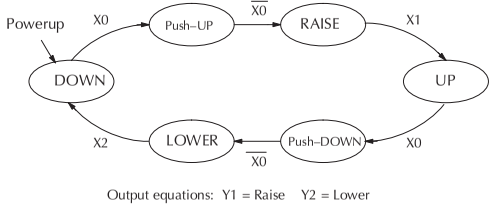

Output equations: Y1 = Raise Y2 = Lower

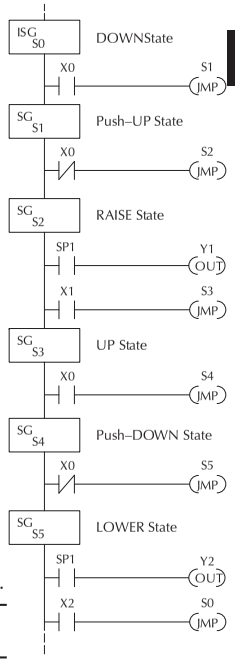

The equivalent stage program is shown to the right. For now, we will assume the door is down at powerup, so the desired powerup state is DOWN. We make S0 an initial stage (ISG). Stage S0 remains active until the door control pushbutton activates. Then we transition (JMP) to Push-UP stage, S1.

A push-release cycle of the pushbutton takes us through stage S1 to the RAISE stage, S2. We use the always-on contact SP1 to energize the motor's raise command, Y1. When the door reaches the fully-raised position, the up limit switch X1 activates. This takes us to the UP Stage S3, where we wait until another door control command occurs.

In the UP Stage S3, a push-release cycle of the pushbutton will take us to the LOWER Stage S5, where we activate Y2 to command the motor to lower the door. This continues until the door reaches the down limit switch, X2. When X2 closes, we transition from Stage S5 to the DOWN stage S0, where we began.

NOTE: *The only special thing about an initial stage (ISG) is that it is automatically active at powerup. Afterwards, it is just like any other.*

Add Safety Light Feature

Next we will add a safety light feature to the door opener system. It's best to get the main function working first as we have done, then adding the secondary features.

The safety light is standard on many commercially-available garage door openers. It is shown to the right, mounted on the motor housing. The light turns on upon any door activity, remaining on for approximately 3 minutes afterwards.

This part of the exercise will demonstrate the use of parallel states in our state diagram. Instead of using the JMP instruction, we'll use the set and reset commands.

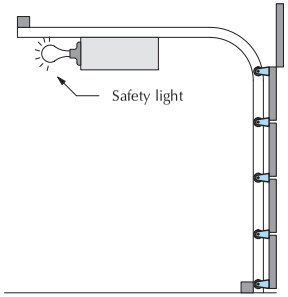

7

Modify the Block Diagram and State Diagram

To control the light bulb, we add an output to our controller block diagram, shown to the right, Y3 is the light control output.

In the diagram below, we add an additional state called "LIGHT". Whenever the garage owner presses the door control switch and releases, the RAISE or LOWER state is active *and the LIGHT state is simultaneously active*. The line to the Light state is dashed, because it is not the primary path.

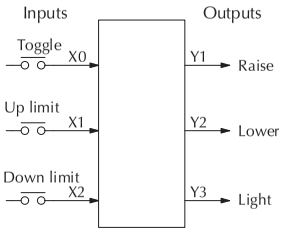

We can think of the Light state as a parallel process to the raise and lower state. The paths to the Light state are not a transition (Stage JMP), but a State Set command. In the logic of the Light stage, we will place a three-minute timer. When it expires, timer bit T0 turns on and resets the Light stage. The path out of the Light stage goes nowhere, indicating the Light stage just becomes inactive, and the light goes out!

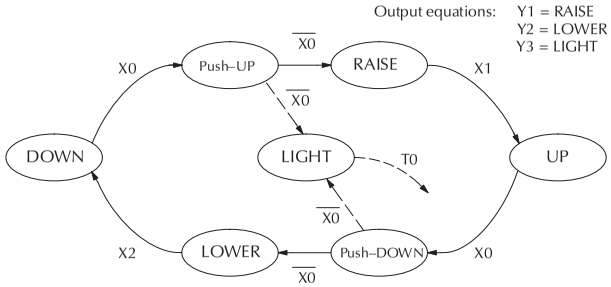

Using a Timer Inside a Stage

The finished modified program is shown to the right. The shaded areas indicate the program additions.

In the Push-UP stage S1, we add the Set Stage Bit S6 instruction. When contact X0 opens, we transition from S1 and go to two new active states: S2 and S6. In the Push-DOWN state S4, we make the same additions. So, any time someone presses the door control pushbutton, the light turns on.

Most new stage programmers would be concerned about where to place the Light Stage in the ladder, and how to number it. The good news is that it doesn't matter!

- Just choose an unused Stage number, and use it for the new stage and as the reference from other stages.
- Placement in the program is not critical, so we place it at the end.

You might think that each stage has to be directly under the stage that transitions to it. While it is good practice, it is not required (that's good, because our two locations for the Set S6 instruction make that impossible). Stage numbers and how they are used determines the transition paths.

In stage S6, we turn on the safety light by energizing Y3. Special relay contact SP1 is always on. Timer T0 times at 0.1 second per count. To achieve 3 minutes time period, we calculate:

$$K = \frac{3 \text{ min.} \times 60 \text{ sec/min}}{0.1 \text{ sec/count}}$$

$$K = 1800 \text{ counts}$$

The timer has power flow whenever stage S6 is active. The corresponding timer bit T0 is set when the timer expires. So three minutes later, T0=1 and the instruction Reset S6 causes the stage to be inactive.

While Stage S6 is active and the light is on, stage transitions in the primary path continue normally and independently of Stage 6. That is, the door can go up, down, or whatever, but the light will be on for precisely 3 minutes.

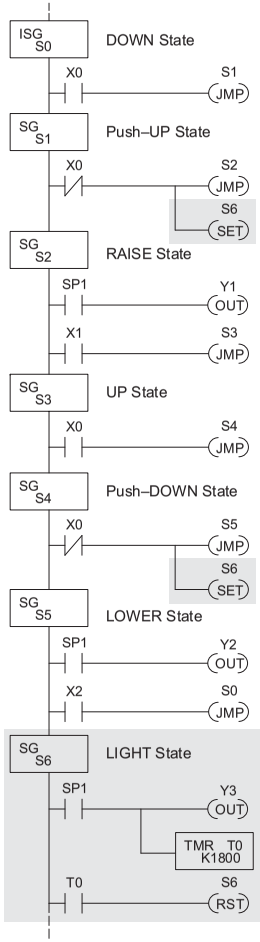

7

Add Emergency Stop Feature

Some garage door openers today will detect an object under the door. This halts further lowering of the door. Usually implemented with a photocell ("electric-eye"), a door in the process of being lowered will halt and begin raising. We will define our safety feature to work in this way, adding the input from the photocell to the block diagram as shown to the right. X3 will be on if an object is in the path of the door.

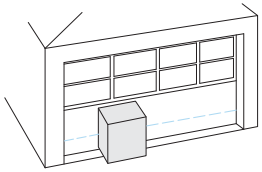

Next, we make a simple addition to the state transition diagram, shown in shaded areas in the figure below. Note the new transition path at the top of the LOWER state. If we are lowering the door and detect an obstruction (X3), we then jump to the Push-UP State. We do this instead of jumping directly to the RAISE state, to give the Lower output Y2 one scan to turn off, before the Raise output Y1 energizes.

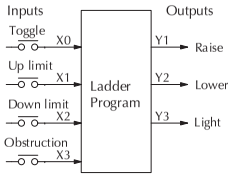

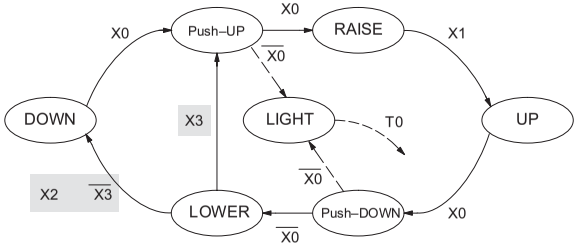

Exclusive Transitions

It is theoretically possible that the down limit (X2) and the obstruction input (X3) could energize at the same moment. In that case, we would "jump" to the Push-UP and DOWN states simultaneously, which does not make sense.

Instead, we give priority to the obstruction by changing the transition condition to the DOWN state to [X2 AND NOT X3]. This ensures the obstruction event has the priority. The modifications we must make to the LOWER Stage (S5) logic are shown to the right. The first rung remains unchanged. The second and third rungs implement the transitions we need. Note the opposite relay contact usage for X3, which ensures the stage will execute only one of the JMP instructions.

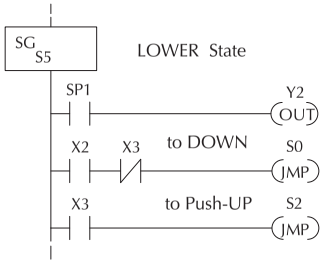

Stage Program Design Considerations

Stage Program Organization

The examples so far in this chapter used one self-contained state diagram to represent the main process. However, we can have multiple processes implemented in stages, all in the same ladder program. New stage programmers sometimes try to turn a stage on and off each scan, based on the false assumption that only one stage can be on at a time. For ladder rungs that you want to execute each scan, just put them in a stage that is always on.

The following figure shows a typical application. During operation, the primary manufacturing activity Main Process, Powerup Initialization, E-Stop and Alarm Monitoring, and Operator Interface are all running. At powerup, three initial stages shown begin operation.

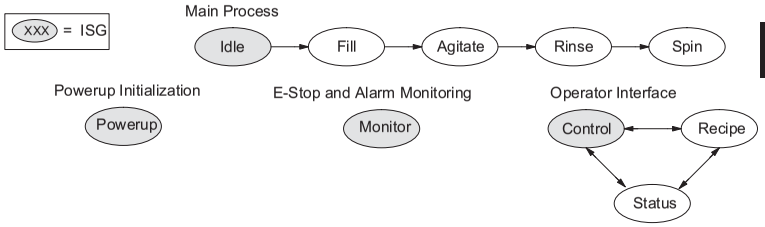

In a typical application, the separate stage sequences above operate as follows:

- **Powerup Initialization** – This stage contains ladder rung tasks done just once at powerup. Its last rung resets the stage, so this stage is only active for one scan (or only as many scans that are required).
- **Main Process** – this stage sequence controls the heart of the process or machine. One pass through the sequence represents one part cycle of the machine, or one batch in the process.
- **E-Stop and Alarm Monitoring** – This stage is always active because it is watching for errors that could indicate an alarm condition or require an emergency stop. It is common for this stage to reset stages in the main process or elsewhere, in order to initialize them after an error condition.
- **Operator Interface** – this is another task that must always be active and ready to respond to an operator. It allows an operator interface to change modes, etc. independently of the current main process step.

Although we have separate processes, there can be coordination among them. For example, in an error condition, the Status Stage may want to automatically switch the operator interface to the status mode to show error information as shown to the right. The monitor stage could set the stage bit for Status and Reset the stages Control and Recipe.

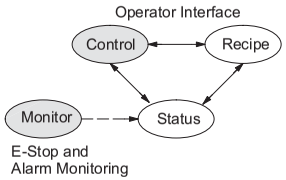

How Instructions Work Inside Stages

We can think of states or stages as simply dividing up our ladder program as depicted in the figure below. Each stage contains only the ladder rungs which are needed for the corresponding state of the process. The logic for transitioning out of a stage is contained within that stage. It's easy to choose which ladder rungs are active at powerup by using an "initial" stage type (ISG).

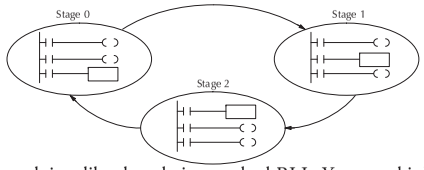

Most all instructions work just like they do in standard RLL. You can think of a stage just like a miniature RLL program which is either active or inactive.

Output Coils – As expected, output coils in active stages will turn on or off outputs according to power flow into the coil. However, note the following:

- Outputs work as usual, provided each output reference (such as "Y3") is used in only one stage.
- An output can be referenced from more than one stage, as long as only one of the stages is active at a time.
- If an output coil is controlled by more than one stage simultaneously, the active stage nearest the bottom of the program determines the final output status during each scan. Therefore, use the OROUT instruction instead when you want multiple stages to have a logical OR control of an output.

One-Shot or PD coils – Use care if you must use a Positive Differential coil in a stage. Remember that the input to the coil must make a 0–1 transition. If the coil is already energized on the first scan when the stage becomes active, the PD coil will not work. This is because the 0–1 transition did not occur.

PD coil alternative: If there is a task which you want to do only once (on 1 scan), it can be placed in a stage which transitions to the next stage on the same scan.

Counter – In using a counter inside a stage, the stage must be active for one scan before the input to the counter makes a 0–1 transition. Otherwise, there is no real transition and the counter will not count.

The ordinary Counter instruction does have a restriction inside stages: it may not be reset from other stages using the RST instruction for the counter bit. However, the special Stage counter provides a solution (see next paragraph).

Stage Counter – The Stage Counter has the benefit that its count may be globally reset from other stages by using the RST instruction. It has a count input, but no reset input. This is the only difference from a standard counter.

Drum – Realize that the drum sequencer is its own process, and is a different programming method than stage programming. If you need to use a drum with stages, be sure to place the drum instruction in an ISG stage that is always active.

Using a Stage as a Supervisory Process

You may recall the light bulb on-off controller example from earlier in this chapter. For the purpose of illustration, suppose we want to monitor the "productivity" of the lamp process, by counting the number of on-off cycles which occurs. This application will require the addition of a simple counter, but the key decision is in where to put the counter.

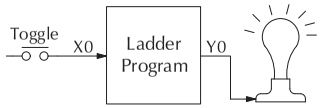

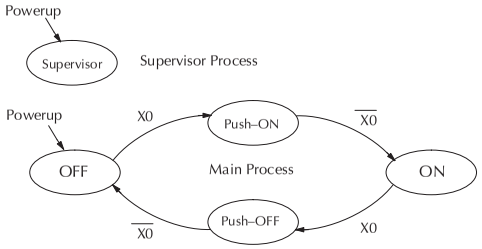

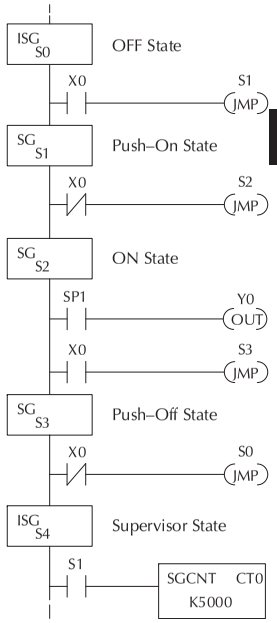

New stage programming students will typically try to place the counter inside one of the stages of the process they are trying to monitor. The problem with this approach is that the stage is active only part of the time. In order for the counter to count, the count input must transition from off to on at least one scan after its stage activates. Ensuring this requires extra logic that can be tricky.

In this case, we only need to add another supervisory stage as shown above, to "watch" the main process. The counter inside the supervisor stage uses the stage bit S1 of the main process as its count input. *Stage bits used as a contact let us monitor a process!*

NOTE: Both the Supervisor stage and the OFF stage are initial stages. The supervisor stage remains active indefinitely.

Stage Counter

The counter in the above example is a special Stage Counter. Note that it does not have a reset input. The count is reset by executing a Reset instruction, naming the counter bit (CT0 in this case). The Stage Counter has the benefit that its count may be globally reset from other stages. The standard Counter instruction does not have this global reset capability. You may still use a regular Counter instruction inside a stage... however, the reset input to the counter is the only way to reset it.

Power Flow Transition Technique

Our discussion of state transitions has shown how the Stage JMP instruction makes the current stage inactive and the next stage (named in the JMP) active. As an alternative way to enter this in *Direct*SOFT 5, you may use the power flow method for stage transitions.

The main requirement is that the current stage be located directly above the next (jump-to) stage in the ladder program. This arrangement is shown in the diagram below, by stages S0 and S1, respectively.

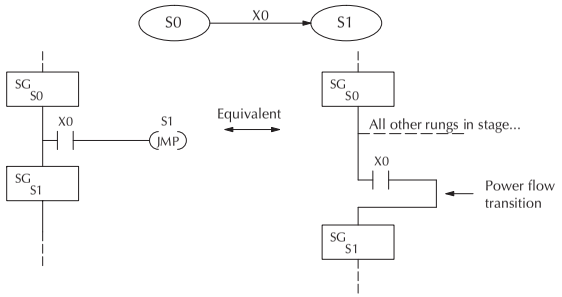

Recall that the Stage JMP instruction may occur anywhere in the current stage, and the result is the same. However, power flow transitions (shown above) must occur as the last rung in a stage. All other rungs in the stage will precede it. The power flow transition method is also achievable on the handheld programmer, by simply following the transition condition with the Stage instruction for the next stage.

The power flow transition method does eliminate one Stage JMP instruction, its only advantage. However, it is not as easy to make program changes as using the Stage JMP. Therefore, we advise using Stage JMP transitions for most programmers.

Stage View in *Direct*SOFT 5

The Stage View option in *Direct*SOFT 5 will let you view the ladder program as a flow chart. The figure below shows the symbol convention used in the diagrams. You may find the stage view useful as a tool to verify that your stage program has faithfully reproduced the logic of the state transition diagram you intend to realize.

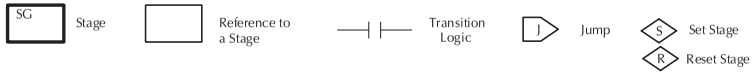

The following diagram is a typical stage view of a ladder program containing stages. Note the left-to-right direction of the flow chart.

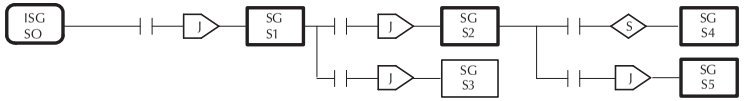

Parallel Processing Concepts

Parallel Processes

Previously in this chapter we discussed how a state may transition to either one state or another, called an *exclusive transition*. In other cases, we may need to branch simultaneously to two or more parallel processes, as shown below. It is acceptable to use all JMP instructions as shown, or we could use one JMP and a Set Stage bit instruction(s) (at least one must be a JMP, in order to leave S1). Remember that all instructions in a stage execute, even when it transitions (the JMP is not a GOTO).

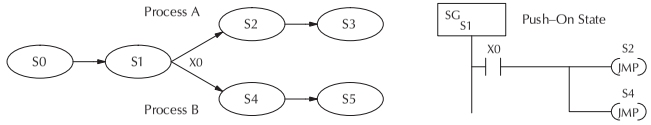

Note that if we want Stages S2 and S4 to energize exactly on the same scan, both stages must be located below or above Stage S1 in the ladder program (see the explanation at the bottom of page 7–7). Overall, parallel branching is easy!

Converging Processes

Now we consider the opposite case of parallel branching, which is converging processes. This simply means we stop doing multiple things and continue doing one thing at a time. In the figure below, processes A and B converge when stages S2 and S4 transition to S5 at some point in time. So, S2 and S4 are *Convergence Stages*.

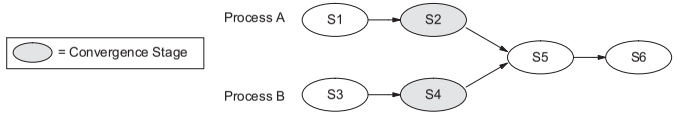

Convergence Stages (CV)

While the converging principle is simple enough, it brings a new complication. As parallel processing completes, the multiple processes almost never finish at the same time. In other words, how can we know whether Stage S2 or S4 will finish last? This is an important point, because we have to decide how to transition to Stage S5.

The solution is to coordinate the transition condition out of convergence stages. We accomplish this with a stage type designed for this purpose: the Convergence Stage (type CV). In the example to the right, convergence stages S2 and S4 are required to be grouped together as shown. **No logic is permitted between CV stages!** The transition condition (X3 in this case) must be located in the last convergence stage. The transition condition only has power flow when all convergence stages in the group are active.

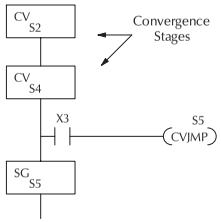

Convergence Jump (CVJMP)

Recall the last convergence stage only has power flow when all CV stages in the group are active. To complement the convergence stage, we need a new jump instruction. The Convergence Jump (CVJMP) shown to the right will transition to Stage S5 when X3 is active (as one might expect), but it also *automatically resets all convergence stages in the group*. This makes the CVJMP jump a very powerful instruction. Note that this instruction may only be used with convergence stages.

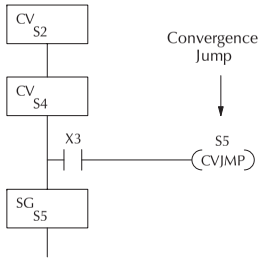

Convergence Stage Guidelines

The following summarizes the requirements in the use of convergence stages, including some tips for their effective application:

- A convergence stage is to be used as the last stage of a process which is running in parallel to another process or processes. A transition to the convergence stage means that a particular process is through, and represents a waiting point until all other parallel processes also finish.
- The maximum number of convergence stages which make up one group is 16. In other words, a maximum of 16 stages can converge into one stage.
- Convergence stages of the same group must be placed together in the program, connected on the power rail without any other logic in between.
- Within a convergence group, the stages may occur in any order, top to bottom. It does not matter which stage is last in the group, because all convergence stages have to be active before the last stage has power flow.
- The last convergence stage of a group may have ladder logic within the stage. However, this logic will not execute until all convergence stages of the group are active.
- The convergence jump (CVJMP) is the intended method to be used to transition from the convergence group of stages to the next stage. The CVJMP resets all convergence stages of the group, and energizes the stage named in the jump.
- The CVJMP instruction must only be used in a convergence stage, as it is invalid in regular or initial stages.
- Convergence Stages or CVJMP instructions may not be used in subroutines or interrupt routines.

7

RLL^{PLUS} (Stage) Instructions

Stage (SG)

The Stage instructions are used to create structured RLL^{PLUS} programs. Stages are program segments which can be activated by transitional logic, a jump or a set stage that is executed from an active stage. Stages are deactivated one scan after transitional logic, a jump, or a reset stage instruction is executed.

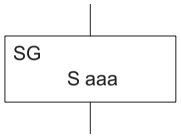

Operand Data Type	DL05 Range
	aaa
Stage S	0–377

The following example is a simple RLL^{PLUS} program. This program utilizes an initial stage, stage, and jump instructions to create a structured program.

7

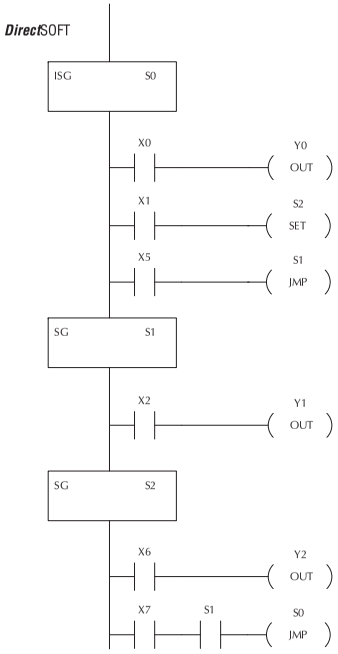

Handheld Programmer Keystrokes

U ISG	→	A 0	ENT		
$ STR	→	A 0	ENT		
GX OUT	→	A 0	ENT		
$ STR	→	B 1	ENT		
X SET	→	SHFT	S RST	C 2	ENT
$ STR	→	F 5	ENT		
K JMP	→	B 1	ENT		
2 SG	→	B 1	ENT		
$ STR	→	C 2	ENT		
GX OUT	→	B 1	ENT		
2 SG	→	C 2	ENT		
$ STR	→	G 6	ENT		
GX OUT	→	C 2	ENT		
$ STR	→	H 7	ENT		
V AND	→	SHFT	S RST	B 1	ENT
K JMP	→	A 0	ENT		

Initial Stage (ISG)

The Initial Stage instruction is normally used as the first segment of an RLL[PLUS] program. Multiple Initial Stages are allowed in a program. They will be active when the CPU enters the Run mode allowing for a starting point in the program. Initial Stages are also activated by transitional logic, a jump or a set stage executed from an active stage.

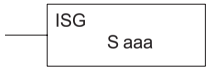

Operand Data Type	DL05 Range
	aaa
Stage ..... S	0–377

NOTE: If the ISG is within the retentive range for stages, the ISG will remain in the state it was in before power down and will NOT turn itself on during the first scan.

7

JUMP (JMP)

The Jump instruction allows the program to transition from an active stage containing the jump instruction to another stage (specified in the instruction). The jump occurs when the input logic is true. The active stage containing the Jump will deactivate 1 scan later.

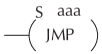

Operand Data Type	DL05 Range
	aaa
Stage ..... S	0–377

Not Jump (NJMP)

The Not Jump instruction allows the program to transition from an active stage which contains the jump instruction to another which is specified in the instruction. The jump will occur when the input logic is off. The active stage that contains the Not Jump will be deactivated 1 scan after the Not Jump instruction is executed.

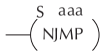

Operand Data Type	DL05 Range
	aaa
Stage ..... S	0–377

In the following example, only stage ISG0 will be active when program execution begins. When X1 is on, program execution will jump from Initial Stage 0 to Stage 1.

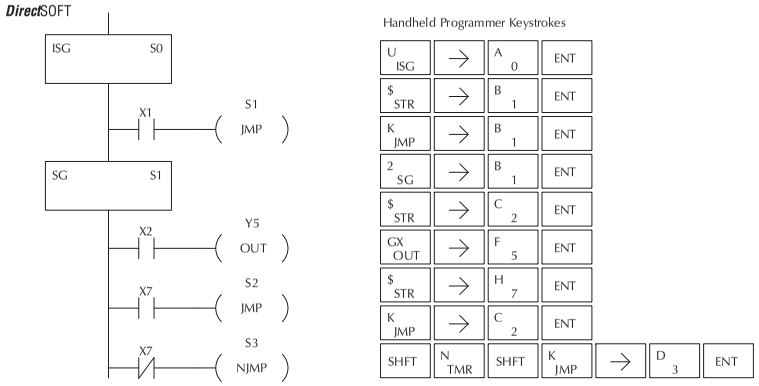

7

Converge Stage (CV) and Converge Jump (CVJMP)

The Converge Stage instruction is used to group certain stages together by defining them as Converge Stages.

When all of the Converge Stages within a group become active, the CVJMP instruction (and any additional logic in the final CV stage) will be executed. All preceding CV stages must be active before the final CV stage logic can be executed. All Converge Stages are deactivated one scan after the CVJMP instruction is executed.

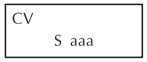

Additional logic instructions are only allowed following the last Converge Stage instruction and before the CVJMP instruction. Multiple CVJUMP instructions are allowed.

Converge Stages must be programmed in the main body of the application program. This means they cannot be programmed in Subroutines or Interrupt Routines.

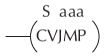

Operand Data Type	DL05 Range
	aaa
Stage ..... S	0–377

In the following example, when Converge Stages S10 and S11 are both active the CVJMP instruction will be executed when X4 is on. The CVJMP will deactivate S10 and S11, and activate S20. Then, if X5 is on, the program execution will jump back to the initial stage, S0.

*Direct*SOFT

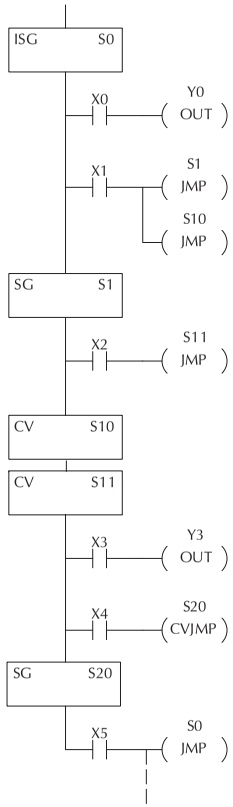

Handheld Programmer Keystrokes

U ISG	→	A 0	ENT					
$ STR	→	A 0	ENT					
GX OUT	→	A 0	ENT					
$ STR	→	B 1	ENT					
K JMP	→	B 1	ENT					
K JMP	→	B 1	A 0	ENT				
2 SG	→	B 1	ENT					
$ STR	→	C 2	ENT					
K JMP	→	B 1	B 1	ENT				
SHFT	C 2	V AND	→	B 1	A 0	ENT		
SHFT	C 2	V AND	→	B 1	B 1	ENT		
$ STR	→	D 3	ENT					
GX OUT	→	D 3	ENT					
$ STR	→	E 4	ENT					
SHFT	C 2	V AND	SHFT	K JMP	→	C 2	A 0	ENT
2 SG	→	C 2	A 0	ENT				
$ STR	→	F 5	ENT					
K JMP	→	A 0	ENT					

Questions and Answers about Stage Programming

We include the following commonly-asked questions about Stage Programming as an aid to new students. All question topics are covered in more detail in this chapter.

Q. What does stage programming do that I can't do with regular RLL programs?

A. Stages allow you to identify all the states of your process before you begin programming. This approach is more organized, because you divide up a ladder program into sections. As stages, these program sections are active only when they are actually needed by the process. Most processes can be organized into a sequence of stages, connected by event-based transitions.

Q. What are Stage Bits?

A. A stage bit is just a single bit in the CPU's image register, representing the active/inactive status of the stage in real time. For example, the bit for Stage 0 is referenced as "S0". If S0 = 0, then the ladder rungs in Stage 0 are bypassed (not executed) on each CPU scan. If S0 = 1, then the ladder rungs in Stage 0 are executed on each CPU scan. Stage bits, when used as contacts, allow one part of your program to monitor another part by detecting stage active/inactive status.

Q. How does a stage become active?

A. There are three ways:

- If the Stage is an initial stage (ISG), it is automatically active at powerup.
- Another stage can execute a Stage JMP instruction naming this stage, which makes it active upon its next occurrence in the program.
- A program rung can execute a Set Stage Bit instruction (such as Set S0).

Q. How does a stage become inactive?

A. There are three ways:

- Standard Stages (SG) are automatically inactive at powerup.
- A stage can execute a Stage JMP instruction, resetting its Stage Bit to 0.
- Any rung in the program can execute a Reset Stage Bit instruction (such as Reset S0).

Q. What about the power flow technique of stage transitions?

A. The power flow method of connecting adjacent stages (directly above or below in the program) actually is the same as the Stage Jump instruction executed in the stage above, naming the stage below. Power flow transitions are more difficult to edit in *Direct*SOFT 5, we list them separately from two preceding questions.

Q. Can I have a stage which is active for only one scan?

A. Yes, but this is not the intended use for a stage. Instead, just make a ladder rung active for 1 scan by including a stage Jump instruction at the bottom of the rung. Then the ladder will execute on the last scan before its stage jumps to a new one.

Q. Isn't a Stage JMP just like a regular GOTO instruction used in software?

A. No, it is very different. A GOTO instruction sends the program execution immediately to the code location named by the GOTO. A Stage JMP simply resets the Stage Bit of the current stage, while setting the Stage Bit of the stage named in the JMP instruction. Stage bits are 0 or 1, determining the inactive/active status of the corresponding stages. A stage JMP has the following results:

- When the JMP is executed, the remainder of the current stage's rungs are executed, even if they reside past(under) the JMP instruction. On the following scan, that stage is not executed, because it is inactive.
- The Stage named in the Stage JMP instruction will be executed upon its next occurrence. If located past (under) the current stage, it will be executed on the same scan. If located before (above) the current stage, it will be executed on the following scan.

Q. How can I know when to use stage JMP, versus a Set Stage Bit or Reset Stage Bit?

A. These instructions are used according to the state diagram topology you have derived:

- Use a Stage JMP instruction for a state transition... moving from one state to another.
- Use a Set Stage Bit instruction when the current state is spawning a new parallel state or stage sequence, or when a supervisory state is starting a state sequence under its command.
- Use a Reset Bit instruction when the current state is the last state in a sequence and its task is complete, or when a supervisory state is ending a state sequence under its command.

Q. What is an initial stage, and when do I use it?

A. An initial stage (ISG) is automatically active at powerup. Afterwards, it works just like any other stage. You can have multiple initial stages, if required. Use an initial stage for ladder that must always be active, or as a starting point.

Q. Can I have place program ladder rungs outside of the stages, so they are always on?

A. It is possible, but it's not good software design practice. Place ladder that must always be active in an initial stage, and do not reset that stage or use a Stage JMP instruction inside it. It can start other stage sequences at the proper time by setting the appropriate Stage Bit(s).

Q. Can I have more than one active stage at a time?

A. Yes, and this is a normal occurrence for many programs. However, it is important to organize your application into separate processes, each made up of stages. And a good process design will be mostly sequential, with only one stage on at a time. However, all the processes in the program may be active simultaneously.

PID Loop Operation

In This Chapter:

DL05 PID Control 8–2
Introduction to PID Control 8–4
Introducing DL05 PID Control 8–6
PID Loop Operation 8–9
Ten Steps to Successful Process Control 8–16
PID Loop Setup 8–18
PID Loop Tuning 8–40
Using the Special PID Features 8–51
Ramp/Soak Generator 8–56
*Direct*SOFT 5 Ramp/Soak Example 8–61
Cascade Control 8–63
Time-Proportioning Control 8–66
Feedforward Control 8–68
PID Example Program 8–70
Troubleshooting Tips 8–72
Glossary of PID Loop Terminology 8–74
Bibliography 8–76

DL05 PID Control

DL05 PID Control Features

Along with control functions discussed in this manual, the DL05 PLC features PID process control capability. The DL05 PID process control loops offer the same features offered in much larger PLCs. The primary features are:

- Up to 4 PID loops, individual programmable sample rates
- Manual, Automatic and Cascade loop operation modes
- Two types of bumpless transfer available
- Full-featured alarms
- Ramp/soak generator with up to 16 segments
- Auto Tuning

The DL05 CPU has process control loop capability in addition to ladder program execution. Up to four loops can be selected and configured. All sensor and actuator wiring connects directly to DL05 analog I/O modules. All process variables, gain values, alarm levels, etc., associated with each loop reside in a Loop Variable Table in the CPU. The DL05 CPU reads process variable (PV) inputs during each scan. Then it makes PID loop calculations during a dedicated time slice on each PLC scan, updating the control output value. The control loops use a Proportional-Integral-Derivative (PID) algorithm to generate the control output. This chapter describes how the loops operate, and how to configure and tune the loops.

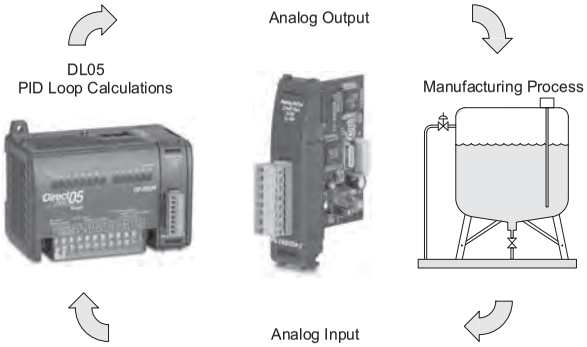

*Direct*SOFT 5 programming software, release 5, or later, is used for configuring analog control loops in the DL05. *Direct*SOFT 5 uses Intelligent boxes (IBoxes) to help you set up the individual loops. After completing the setup, you can use *Direct*SOFT 5's PID Trend View to tune each loop. The configuration and tuning selections you make are stored in the DL05's V-memory (RAM). The loop parameters also may be saved to disk for recall later.

PID Loop Feature	Specifications
Number of loops	Selectable, 4 maximum
CPU V-memory needed	32 words (V locations) per loop selected, 64 words if using ramp/soak
PID algorithm	Position or Velocity form of the PID equation
Control Output polarity	Selectable direct-acting or reverse-acting
Error term curves	Selectable as linear, square root of error, and error squared
Loop update rate (time between PID calculation)	0.05 to 99.99 seconds, user programmable
Minimum loop update rate	0.05 seconds for 1 to 4 loops
Loop modes	Automatic, Manual (operator control), or Cascade control
Ramp/Soak Generator	Up to 8 ramp/soak steps (16 segments) per loop with indication of ramp/soak step number
PV curves	Select standard linear, or square-root extract (for flow meter input)
Set Point Limits	Specify minimum and maximum setpoint values
Process Variable Limits	Specify minimum and maximum Process Variable values
Proportional Gain	Specify gains of 0.01 to 99.99
Integrator (Reset)	Specify reset time of 0.1 to 999.8 in units of seconds or minutes
Derivative (Rate)	Specify the derivative time from 0.01 to 99.99 seconds
Rate Limits	Specify derivative gain limiting from 1 to 20
Bumpless Transfer I	Automatically initialized bias and setpoint when control switches from manual to automatic
Bumpless Transfer II	Automatically set the bias equal to the control output when control switches from manual to automatic
Step Bias	Provides proportional bias adjustment for large setpoint changes
Freeze Bias (Anti-windup)	For position form of PID, this inhibits integrator action when the control output reaches 0% or 100 % (speeds up loop recovery when output recovers from saturation)
Error Deadband	Specify a tolerance (plus and minus) for the error term (SP–PV), so that no change in control output value is made

Alarm Feature	Specifications
PV Alarm Hysteresis	Specify 1 to 200 (word/binary) does not affect all alarms, such as, PV Rate-of-Change Alarm
PV Alarm Points	Select PV alarm settings for Low–low, Low, High, and High-high conditions
PV Deviation	Specify alarms for two ranges of PV deviation from the setpoint value
Rate of Change	Detect when PV exceeds a rate of change limit you specify

Introduction to PID Control

What is PID Control?

In this discussion, we will explain why PID control is used in process control instead of trying to provide control by simply using an analog input and a discrete output.

There are many types of analog controllers available, and the proper selection will depend upon the particular application. There are two types of analog controllers that are used throughout industry:

1. The ON-OFF controller, sometimes referred to as an open loop controller.
2. The PID controller, sometimes called a closed loop controller.

Regardless of type, analog controllers require input signals from electronic sensors such as pressure, differential pressure, level, flow meter or thermocouples. As an example, one of the most common analog control applications is located in your house for controlling either heat or air conditioning, the thermostat.

You wish for your house to be at a comfortable temperature so you set a thermostat to a desired temperature (setpoint). You then select the "comfort" mode, either heat or A/C. A temperature sensing device, normally a thermistor, is located within the thermostat. If the thermostat is set for heat and the setpoint is set for 69°, the furnace will be turned on to provide heat at, normally, 2° below the setpoint. In this case, it would turn on at 67°. When the temperature reaches 71°, 2° above setpoint, the furnace will turn off. In the opposite example, if the thermostat is set for A/C (cooling), the thermostat will turn the A/C unit on/off opposite the heat setting. For instance, if the thermostat is set to cool at 76°, the A/C unit will turn on when the sensed temperature reaches 2° above the setpoint or 78°, and turn off when the temperature reaches 74°. This would be considered to be an ON-OFF controller. The waveform below shows the action of the heating cycle. Note that there is a slight overshoot at the turn-off point, also a slight undershoot at the turn-on point.

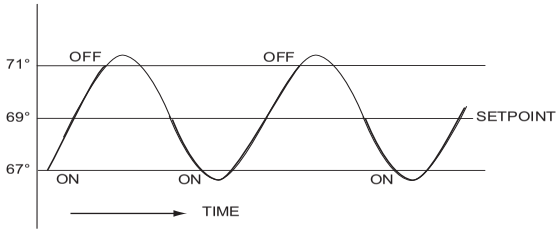

The ON-OFF controller is used in some industrial control applications, but is not practical in the majority of industrial control processes.

The most common process controller that is used in industry is the PID controller.

The PID controller controls a continuous feedback loop that keeps the process output (control variable) flowing normally by taking corrective action whenever there is a deviation from the desired value (setpoint) of the process variable (PV) such as, rate of flow, temperature, voltage, etc. An "error" occurs when an operator manually changes the setpoint or when an event (valve opened, closed, etc.) or a disturbance (cold water, wind, etc.) changes the load, thus causing a change in the process variable.

The PID controller receives signals from sensors and computes corrective action to the actuator from a computation based on the error (Proportional), the sum of all previous errors (Integral) and the rate of change of the error (Derivative).

We can look at the PID controller in more simple terms. Take the cruise control on an automobile as an example. Let's say that we are cruising on an interstate highway in a car equipped with cruise control. The driver decides to engage the cruise control by turning it ON, then he manually brings the car to the desired cruising speed, say 70 miles per hour. Once the cruise speed is reached, the SET button is pushed fixing the speed at 70 mph, the setpoint. Now, the car is cruising at a steady 70 mph until it comes to a hill to go up. As the car goes up the hill, it tends to slow down. The speed sensor senses this and causes the throttle to increase the fuel to the engine. The vehicle speeds up to maintain 70 mph without jerking the car and it reaches the top at the set speed. When the car levels out after reaching the top of the hill it will speed up. The speed sensor senses this and signals the throttle to provide less fuel to the engine, thus, the engine slows down allowing the car to maintain the 70 mph speed. How does this application apply to PID control? Lets look at the function of P, I and D terms:

- **Proportional** - is commonly referred to as Proportional Gain. The proportional term is the corrective action which is proportional to the error, that is, the change of the manipulated variable is equal to the proportional gain multiplied by the error (the activating signal). In mathematical terms:

  Proportional action = proportional gain X error
  Error = Setpoint (SP) - Process Variable (PV)

  Applying this to the cruise control, the speed was set at 70 mph which is the Setpoint. The speed sensor senses the actual speed of the car and sends this signal to the cruise controller as the Process Variable (PV). When the car is on a level highway, the speed is maintained at 70 mph, thus, no error since the error would be SP - PV = 0. When the car goes up the hill, the speed sensor detected a slow down of the car, SP-PV = error. The proportional gain would cause the output of the speed controller to bring the car back to the setpoint of 70 mph. This would be the Controlled Output.
- **Integral** - this term is often referred to as Reset action. It provides additional compensation to the control output, which causes a change in proportion to the value of the error over a period of time. In other words, the reset term is the integral sum of the error values over a period of time.
- **Derivative** - this term is referred to as rate. The Rate action adds compensation to the control output, which causes a change in proportion to the rate of change of error. Its job is to anticipate the probable growth of the error and generate a contribution to the output in advance.

Introducing DL05 PID Control

The DL05 is capable of controlling a process variable such as those already mentioned. As previously mentioned, the control of a variable, such as temperature, at a given level (setpoint) as long as there are no disturbances (cold water) in the process.

The DL05 PLC has the ability to directly accept signals from electronic sensors, such as thermocouples, pressure, VFDs, etc. These signals may be used in mathematically derived control systems.

In addition, the DL05 has built-in PID control algorithms that can be implemented. The basic function of PID closed loop process control is to maintain certain process characteristics at desired setpoints. As a rule, the process deviates from the desired setpoint reference as a result of load material changes and interaction with other processes. During this control, the actual condition of the process characteristics (liquid level, temperature, motor control, etc.) is measured as a *process variable* (PV) and compared with the target setpoint (SP). When deviations occur, an error is generated by the difference between the process variable (actual value) and the setpoint (desired value). Once an error is detected, the function of the control loop is to modify the control output in order to force the error to zero.

The DL05 PID control provides feedback loops using the PID algorithm. The control output is computed from the measured process variable as follows:

Let:

K_c = proportional gain

T_i = Reset or integral time

T_d = Derivative time or rate

SP = Setpoint

PV(t) = Process Variable at time "t"

e(t) = SP-PV(t) = PV deviation from setpoint at time "t" or PV error.

Then:

M(t) = Control output at time "t"

$$M(t) = Kc \left[e(t) + 1/T_i \int_0^t e(x)\, dx + T_d\, d/dt\, e(t) \right] + M_o$$

The analog input module receives the process variable in analog form along with an operator entered setpoint; the CPU computes the error. The error is used in the algorithm computation to provide corrective action at the control output. The function of the control action is based on an output control, which is proportional to the instantaneous error value. The *integral control action* (reset action) provides additional compensation to the control output, which causes a change in proportion to the value of the change of error over a period of time. The *derivative control action* (rate change) adds compensation to the control output, which causes a change in proportion to the rate of change of error. These three modes are used to provide the desired control action in Proportional (P), Proportional-Integral (PI), or Proportional-Integral-Derivative (PID) control fashion.

Standard DL05/06 analog input modules are used to interface to field transmitters to obtain the PV. These transmitters normally provide a 4-20mA current or an analog voltage of various ranges for the control loop.

For temperature control, thermocouple or RTD can be connected directly to the appropriate module. The PID control algorithm, residing in the CPU memory, receives information from the user program, primarily control parameters and setpoints. Once the CPU makes the PID calculation, the result may be used to directly control an actuator connected to a 4-20mA current output module to control a valve.

With ***Direct***SOFT 5, additional ladder logic programming, both time proportioning (eg. heaters for temperature control) and position actuator (eg. reversible motor on a valve) type of control schemes can be easily implemented. This chapter will explain how to set up the PID control loop, how to implement the software and how to tune the loop.

The following block diagram shows the key parts of a PID control loop. The path from the PLC to the manufacturing process and back to the PLC is the closed loop control.

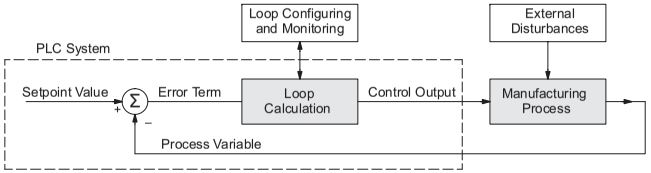

Process Control Definitions

Manufacturing Process – the set of actions that adds value to raw materials. The process can involve physical changes and/or chemical changes to the material. The changes render the material more useful for a particular purpose, ultimately used in a final product.

Process Variable – The controlled variable part of the process that you wish to control. It may be temperature, pressure, level, flow, composition, density, the ratio of two streams, etc. Also known as the actual value.

Setpoint – This is the target for the process variable. When all conditions of the process are correct, the process variable will equal the setpoint.

Control Output – The result of the loop calculation, which becomes a command for the process (such as the heater level in an oven). This is sometimes referred to as control variable.

Error Term – The algebraic difference between the process variable and the setpoint. This is the control loop error, and is equal to zero when the process variable is equal to the setpoint (desired) value. A well-behaved control loop is able to maintain a small error term magnitude.

Manipulated Variable – This is what is used to effect the controlled variable. For example, the fuel used in a furnace might be manipulated in order to control the temperature.

Disturbance – Something in the system that changes such that corrective action is required. For instance, when controlling a flow and the upstream pressure drops, the control valve must open wider in order to keep flow constant. The drop in upstream pressure is the disturbance.

Final Control Element – This is the physical device used to control the manipulated variable. Valves are probably the most widely used final control element.

Lag Time – The time it takes for the process to respond to a change in manipulated variable. This is also known as the capacitance of the system. When you're in the shower and you turn up the hot water a little, the time it takes before the water gets hot is the lag time.

Dead Time – The time it takes for a change in the process to be recognized. Composition analyzers and quality control are usually sources of significant dead time.

Loop Configuring – Operator-initiated selections which set up and optimize the performance of a control loop. The loop calculation function uses the configuration parameters in real time to adjust gains, offsets, etc.

Loop Monitoring – The function which allows an operator to observe the status and performance of a control loop. This is used in conjunction with the loop configuring to optimize the performance of a loop (minimize the error term).

PID Loop Operation

The Proportional–Integral–Derivative (PID) algorithm is widely used in process control. The PID method of control adapts well to electronic solutions, whether implemented in analog or digital (CPU) components. The DL05 CPU implements the PID equations digitally by solving the basic equations in software. I/O modules serve only to convert electronic signals into digital form (or vice versa).

The DL05 uses two types of PID controls: "position" and "velocity". These terms usually refer to motion control situations, but here we use them in a different sense:

- PID *Position* Algorithm – The control output is calculated so it responds to the displacement (position) of the PV from the SP (error term).
- PID *Velocity* Algorithm – The control output is calculated to represent the rate of change (velocity) for the PV to become equal to the SP.

Position Form of the PID Equation

Referring to the control output equation on page 8-6, the DL05 CPU approximates the output M(t) using a discrete position form of the PID equation.

Let:

Ts = Sample rate
Kc = Proportional gain
Ki = Kc * (Ts/Ti) = Coefficient of integral term
Kr = Kc * (Td/Ts) = Coefficient of derivative term
Ti = Reset or integral time
Td = Derivative time or rate
SP = Setpoint
PV_n = Process variable at n^{th} sample
$en = SP - PV_n$ = Error at n^{th} sample
M_o = Value to which the controller output has been initialized

Then:

M_n = Control output at n^{th} sample

$$M_n = Kc * e_n + Ki \sum_{i=1}^{n} e_i + Kr\,(e_n - e_{n-1}) + M_o$$

This form of the PID equation is referred to as the position form since the actual actuator position is computed. The velocity form of the PID equation computes the change in actuator position. The CPU modifies the standard equation slightly to use the derivative of the process variable instead of the error as follows:

$$M_n = Kc * e_n + Ki \sum_{i=1}^{n} e_i + Kr\,(PV_n - PV_{n-1}) + M_o$$

These two forms are equivalent unless the setpoint is changed. In the original equation, a large step change in the setpoint will cause a correspondingly large change in the error resulting in a bump to the process due to derivative action. This bump is not present in the second form of the equation.

The DL05 also combines the integral sum and the initial output into a single term called the bias (Mx). This results in the following set of equations:

$$Mx_o = M_o$$

$$Mx = Ki * e_n + Mx_{n-1}$$

$$M_n = Kc * e_n - Kr(PV_n - PV_{n-1}) + Mx_n$$

The DL05 by default will keep the normalized output M in the range of 0.0 to 1.0. This is done by clamping M to the nearer of 0.0 or 1.0 whenever the calculated output falls outside this range. The DL05 also allows you to specify the minimum and maximum output limit values (within the range 0 to 4095 in binary if using 12 bit unipolar).

NOTE: The equations and algorithms , or parts of, in this chapter are only for references. Analysis of these equations can be found in most good text books about process control.

Reset Windup Protection

Reset windup can occur if reset action (integral term) is specified and the computation of the bias term Mx is:

$$Mx = Ki * e_n + Mx_{n-1}$$

For example, assume the output is controlling a valve and the PV remains at some value greater than the setpoint. The negative error (e_n) will cause the bias term (Mx) to constantly decrease until the output M goes to 0 closing the valve. However, since the error term is still negative, the bias will continue to decrease becoming ever more negative. When the PV finally does come back down below the SP, the valve will stay closed until the error is positive for long enough to cause the bias to become positive again. This will cause the process variable to undershoot.

One way to solve the problem is to simply clamp the normalized bias between 0.0 and 1.0. The DL05 CPU does this. However, if this is the only thing that is done, then the output will not move off 0.0 (thus opening the valve) until the PV has become less than the SP. This will also cause the process variable to undershoot.

The DL05 CPU is programmed to solve the overshoot problem by either freezing the bias term, or by adjusting the bias term.

Freeze Bias

If the "Freeze Bias" option is selected when setting up the PID loop (discussed later) then the CPU simply stops changing the bias (Mx) whenever the computed normalized output (M) goes outside the interval 0.0 to 1.0.

$$Mx = Ki * e_n + Mx_{n-1}$$

$$M = Kc * e_n - Kr(PV_n - PV_{n-1}) + Mx$$

$M_n = 0$ "if M < 0"
$M_n = M$ "if $0 \leq M \leq 1$"
$M_n = 1$ "if M > 1"

$Mx_n = Mx$ "if $0 \leq M \leq 1$"
$Mx_n = Mx_{n-1}$ "otherwise"

Thus in this example, the bias will probably not go all the way to zero so that, when the PV does begin to come down, the loop will begin to open the valve sooner than it would have if the bias had been allowed to go all the way to zero. This action has the effect of reducing the amount of overshoot.

Adjusting the Bias

The normal action of the CPU is to adjust the bias term when the output goes out of range as shown below.

$$Mx = Ki * e_n + Mx_{n-1}$$

$$M = Kc * e_n - Kr(PV_n - PV_{n-1}) + Mx$$

$M_n = 0$ "if M < 0"
$M_n = M$ "if $0 \leq M \leq 1$"
$M_n = 1$ "if M > 1"

$Mx_n = Mx$ "if $0 \leq M \leq 1$"
$Mx_n = M_n - Kc * e_n - Kr(PV_n - PV_{n-1})$ "otherwise"

By adjusting the bias, the valve will begin to open as soon as the PV begins to come down. If the loop is properly tuned, overshoot can be eliminated entirely. If the output went out of range due to a setpoint change, then the loop probably will oscillate because we must wait for the bias term to stabilize again.

The choice of whether to use the default loop action or to freeze the bias is dependent on the application. **If large, step changes to the setpoint are anticipated, then it is probably better to select the freeze bias option** (see page 8-34).

Step Bias Proportional to Step Change in SP

This feature reduces oscillation caused by a step change in setpoint when the adjusting bias feature is used.

$Mx = Mx * SP_n / SP_{n-1}$ "if the loop is direct acting"

$Mx = Mx * SP_{n-1} / SP_n$ "if the loop is reverse acting"

$Mx_n = 0$ "if $Mx < 0$"
$Mx_n = Mx$ "if $0 \leq Mx \leq 1$"
$Mx_n = 1$ "if $M > 1$"

Eliminating Proportional, Integral or Derivative Action

It is not always necessary to run a full three mode PID control loop. Most loops require only the PI terms or just the P term. Parts of the PID equation may be eliminated by choosing appropriate values for the gain (Kc), reset (Ti) and rate (Td) yielding a P, PI, PD, I and even an ID and a D loop.

Eliminating Integral Action The effect of integral action on the output may be eliminated by setting Ti = 9999 or 0000. When this is done, the user may then manually control the bias term (Mx) to eliminate any steady-state offset.

Eliminating Derivative Action The effect of derivative action on the output may be eliminated by setting Td = 0 (most loops do not require a D parameter; it may make the loop unstable).

Eliminating Proportional Action Although rarely done, the effect of proportional term on the output may be eliminated by setting Kc = 0. Since Kc is also normally a multiplier of the integral coefficient (Ki) and the derivative coefficient (Kr), the CPU makes the computation of these values conditional on the value of Kc as follows:

$Ki = Kc * (Ts / Ti)$ "if $Kc \neq 0$"

$Ki = Ts / Ti$ "if Kc = 0 (I or ID only)"

$Kr = Kc * (Td / Ts)$ "if $Kc \neq 0$"

$Kr = Td / Ts$ "if Kc = 0 (ID or D only)"

Velocity Form of the PID Equation

The standard position form of the PID equation computes the actual actuator position. An alternative form of the PID equation computes the change in actuator position. This form of the equation is referred to as the velocity PID equation and is obtained by subtracting the equation at time "n" from the equation at time "n-1".

The velocity equation is given by:

$$\Delta M_n = M - M_{n-1}$$

$$\Delta M_n = Kc * (e_n - e_{n-1}) + Ki * (PV_n - 2 * PV_{n-1} + PV_{n-2})$$

Bumpless Transfer

The DL05 loop controller provides for bumpless mode changes. A bumpless transfer from manual mode to automatic mode is achieved by preventing the control output from changing immediately after the mode change.

When a loop is switched from Manual mode to Automatic mode, the setpoint and Bias are initialized as follows:

Position PID Algorithm	Velocity PID Algorithm
SP = PV	SP = PV
Mx = M (Control Output)	

The bumpless transfer feature of the DL05 is available in two types: Bumpless I and Bumpless II (see page 8-26). The transfer type is selected when the loop is set up.

Loop Alarms

The DL05 allows the user to specify alarm conditions that are to be monitored for each loop. Alarm conditions are reported to the CPU by setting up the alarms in ***Direct***SOFT 5 using the PID setup alarm dialog when the loop is setup. The alarm features for each loop are:

- **PV Limit** – Specify up to four PV alarm points.

  High-High PV rises above the programmed High-High Alarm Limit.
  High PV rises above the programmed High Alarm Limit.
  Low PV fails below the Low Alarm Limit.
  Low-Low PV fails below the Low-Low Limit.

- **PV Deviation Alarm** – Specify an alarm for High and Low PV deviation from the setpoint (Yellow Deviation). An alarm for High High and Low Low PV deviation from the setpoint (Orange Deviation) may also be specified. When the PV is further from the setpoint than the programmed Yellow or Orange Deviation Limit the corresponding alarm bit is activated.
- **Rate of Change** – This alarm is set when the PV changes faster than a specified rate-of-change limit.
- **PV Alarm Hysteresis** – The PV Limit Alarms and PV Deviation Alarms are programmed using threshold values. When the absolute value or deviation exceeds the threshold, the alarm status becomes true. Real-world PV signals have some noise on them, which can cause some fluctuation in the PV value in the CPU. As the PV value crosses an alarm threshold, its fluctuations will cause the alarm to be intermittent and annoy process operators. The solution is to use the PV Alarm Hysteresis feature.

Loop Operating Modes

The DL05 loop controller operates in one of two modes, either *Manual* or *Automatic*.

Manual

In manual mode, the control output is determined by the operator, not the loop controller. While in manual mode, the loop controller will still monitor all of the alarms including High-High, High, Low, Low-Low, Yellow deviation, Orange deviation and Rate-of-Change.

Automatic

In automatic mode, the loop controller computes the control output based on the programmed parameters stored in V-memory. All alarms are monitored while in automatic.

Cascade

Cascade mode is an option with the DL05 PLC and is used in special control applications. If the cascade feature is used, the loop will operate as it would if in automatic mode except for the fact that a cascaded loop has a setpoint which is the control output from another loop.

Special Loop Calculations

Reverse Acting Loop

Although the PID algorithm is used in a direct, or forward, acting loop controller, there are times when a reverse acting control output is needed. The DL05 loop controller allows a loop to operate as reverse acting. With a reverse acting loop, the output is driven in the opposite direction of the error. For example, if SP > PV, then a reverse acting controller will decrease the output to increase the PV.

$$Mx = -Ki * e_n + Mx_{n-1}$$

$$M = -Kc * e_n + Kr(PV_n - PV_{n-1}) + Mx_n$$

Square Root of the Process Variable

Square root is selected whenever the PV is from a device such as an orifice meter which requires this calculation.

Error Squared Control

Whenever error squared control is selected, the error is calculated as:

$$e_n = (SP - PV_n) * ABS(SP - PV_n)$$

A loop using the error squared is less responsive than a loop using just the error, however, it will respond faster with a large error. The smaller the error, the less responsive the loop. Error squared control would typically be used in a PH control application.

Error Deadband Control

With error deadband control, no control action is taken if the PV is within the specified deadband area around the setpoint. The error deadband is the same above and below the setpoint.

Once the PV is outside of the error deadband around the setpoint, the entire error is used in the loop calculation.

$e_n = 0$ "SP - Deadband_Below_SP < PV < SP - Deadband_Above_SP"
$e_n = P - PV_n$ "otherwise"

The error will be squared first if both Error Squared and Error Deadband is selected.

Derivative Gain Limiting

When the coefficient of the derivative term, Kr, is a large value, noise introduced into the PV can result in erratic loop output. This problem is corrected by specifying a derivative gain limiting coefficient, Kd. Derivative gain limiting is a first order filter applied to the derivative term computation, Y_n, as shown below.

$$Y_n = Y_{n-1} + \frac{Ts}{Ts + (\frac{Td}{Kd})} * (PV_n - Y_{n-1})$$

Position Algorithm

$$Mx = Ki * e_n + Mx_{n-1}$$

$$M = Kc * e_n - Kr * (Y_n - Y_{n-1}) + Mx$$

Velocity Algorithm

$$\Delta M = Kc * (e_n - e_{n-1}) + Ki * e_n - Kr * (Y_n - 2 * Y_{n-1} + Y_{n-2})$$

Ten Steps to Successful Process Control

Controllers such as the DL05 PLC provide sophisticated process control features. Automated control systems can be difficult to debug, because a given symptom can have many possible causes. We recommend a careful, step-by-step approach to bringing new control loops online:

Step 1: Know the Recipe

The most important knowledge is – how to produce your product. This knowledge is the foundation for designing an effective control system. A good process *recipe* will do the following:

- Identify all relevant Process Variables, such as temperature, pressure, or flow rates, etc. which need precise control.
- Plot the desired Setpoint values for each process variables for the duration of one process cycle.

Step 2: Plan Loop Control Strategy

This simply means choosing the method the machine will use to maintain control over the Process Variables to follow their Setpoints. This involves many issues and trade-offs, such as energy efficiency, equipment costs, ability to service the machine during production, and more. You must also determine how to generate the Setpoint value during the process, and whether a machine operator can change the SP.

Step 3: Size and Scale Loop Components

Assuming the control strategy is sound, it is still crucial to *properly size the actuator and properly scale the sensors.*

- Choose an actuator (heater, pump. etc.) which matches the size of the load. An oversized actuator will have an overwhelming effect on your process after a SP change. However, an undersized actuator will allow the PV to lag or drift away from the SP after a SP change or process disturbance.
- Choose a PV sensor which matches the range of interest (and control) for our process. Decide the resolution of control you need for the PV (such as within 2°C), and make sure the sensor input value provides the loop with at least 5 times that resolution (at LSB level). However, an over-sensitive sensor can cause control oscillations, etc. The DL05 provides 12–bit and 15–bit unipolar and bipolar data format options, and a 16–bit unipolar option. This selection affects SP, PV, Control Output and Integrator sum.

Step 4: Select I/O Modules

After deciding the number of loops, PV variables to measure, and SP values, you can choose the appropriate I/O module. Refer to the figure on the next page. In many cases, you will be able to share input or output modules, or use a analog I/O combination module, among several control loops. The example shown sends the PV and Control Output signals for two loops through the same set of modules.

AutomationDirect offers DL05 analog input modules with 4 channels per module that accept 0 – 20mA or 4 – 20mA signals. Also, analog input and output combination modules are now available. Thermocouple and RTD modules can also be used to maintain temperatures to a 10th of a degree. Refer to the sales catalog for further information on these modules, or find the modules on our website, **www.automationdirect.com.**

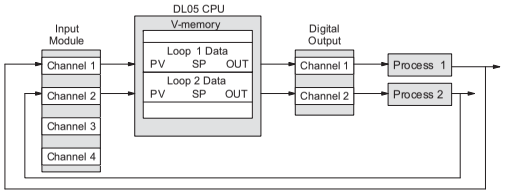

Step 5: Wiring and Installation

After selection and procurement of all loop components and I/O module(s), you can perform the wiring and installation. Refer to the wiring guidelines in Chapter 2 of this manual, and to the **D0–OPTIONS–M** manual. The most common wiring errors when installing PID loop controls are:

- Reversing the polarity of sensor or actuator wiring connections.
- Incorrect signal ground connections between loop components.

Step 6: Loop Parameters

After wiring and installation, choose the loop setup parameters. The easiest method for programming the loop tables is using *Direct*SOFT 5 (5.0 or later). This software provides PID Setup using dialog boxes to simplify the task. **Note: It is important to understand the meaning of all loop parameters mentioned in this chapter before choosing values to enter.**

Step 7: Check Open Loop Performance

With the sensor and actuator wiring done, and loop parameters entered, we must manually and carefully check out the new control system using the Manual mode).

- Verify that the PV value from the sensor is correct.
- If it is safe to do so, gradually increase the control output up above 0%, and see if the PV responds (and moves in the correct direction!).

Step 8: Loop Tuning

If the Open Loop Test (page 8–40) shows the PV reading is correct and the control output has the proper effect on the process; you can follow the closed loop tuning procedure (see page 8–46). In this step, the loop is tuned so the PV automatically follows the SP.

Step 9: Run Process Cycle

If the closed loop test shows the PV will follow small changes in the SP, consider running an actual process cycle. You will need to have completed the programming which will generate the desired SP in real time. In this step, you may want to run a small test batch of product through the machine, watching the SP change according to the recipe.

WARNING: Be sure the Emergency Stop and power-down provision is readily accessible, in case the process goes out of control. Damage to equipment and/or serious injury to personnel can result from loss of control of some processes.

Step 10: Save Parameters

When the loop tests and tuning sessions are complete, be sure to save all loop setup parameters to disk.

PID Loop Setup

Some Things to Do and Know Before Starting

Have your analog module installed and operational before beginning the loop setup (refer to the DL05/06 Option Modules User Manual, D0-OPTIONS-M). The DL05 PLC gets its PID loop processing instructions from V-memory tables. There isn't a PID instruction that can be used in RLL, such as a block, to setup the PID loop control. Instead, the CPU reads the setup parameters from system V-memory locations. These locations are shown in the table below for reference only; they can be used in a RLL program if needed.

Address	Setup Parameter	Data type	Ranges	Read/Write
V7640	Loop Parameter Table Pointer	Octal	V1200 – V7340 V10000 – V17740	write
V7641	Number of Loops	BCD	1 – 8	write
V7642	Loop Error Flags	Bit	0 or 1	read

NOTE: The V-memory data is stored in SRAM memory. If power is removed from the CPU for an extended period of time, the PID Setup Parameters will be lost. It is recommended to use the MOV instruction, which places the data in non-volatile memory, when setting up the parameters in the ladder program.

8

PID Error Flags

The CPU reports any programming errors of the setup parameters in V7640 and V7641. It does this by setting the appropriate bits in V7642 on program-to-run mode transitions.

If you use the ***Direct***SOFT 5 loop setup dialog box, its automatic range checking prohibits possible setup errors. However, the setup parameters may be written using other methods such as RLL, so the error flag register may be helpful in those cases. The following table lists the errors reported in V7642.

Bit	Error Description (0 = no error, 1 = error)
0	The starting address (in V7640) is out of the lower V-memory range.
1	The starting address (in V7640) is out of the upper V-memory range.
2	The number of loops selected (in V7641) is greater than 8.
3	The loop table extends past (straddles) the boundary at V7377. Use an address closer to V1200.

NOTE: As a quick check, if the CPU is in Run mode and V7642=0000, there are no programming errors.

Establishing the Loop Table Size and Location

On a PROGRAM-to-RUN mode transition, the CPU reads the loop setup parameters as pictured below. At that moment, the CPU learns the location of the loop table and the number of loops it configures. Then during the ladder program scan, the PID Loop task uses the loop data to perform calculations, generate alarms, and so on. There are some loop table

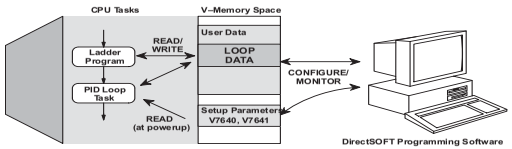

parameters the CPU will read or write on every loop calculation.

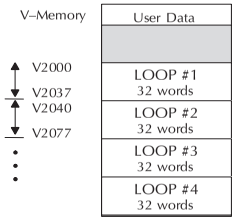

The Loop Table contains data for only the number of loops that are selected. The address for the table is stored in V7641. Each loop configuration occupies 32 words (0 to 37 octal) in the loop table.

For example, consider an application with 4 loops, and V2000 has been chosen as the starting location. The Loop Parameter will occupy V2000 – V2037 for loop 1, V2040 – V2077 for loop 2 and so on. Loop 4 occupies V2140 - V2177.

Determine the block of V-memory to be used for each PID loop. Besides being the beginning of the PID parameter memory block, the first address will be the start of loop 1 parameters. Remember, there are 32 words (0 to 37 octal) needed for each loop. Once you have determined the beginning V-memory address to be used, you can setup and store the PID parameters either directly in your RLL program or by the using PID Setup in ***Direct***SOFT 5.

NOTE: Whether one or more loops are being setup, this block of V-memory will only be used for the PID loop parameters, ***do not use this block of memory for anything else in your program.***

8

Using ***Direct***SOFT 5 is the simplest way to setup the parameters. The PID parameters can be setup either offline or online while developing the user program. The parameters can only be entered in PID setup when the PLC is in the Program mode. Once the parameters have been entered and saved for each loop, changes made through the PID setup can be made, but only in Program Mode. You can type the beginning address in the PID Table Address dialog found when the PID Setup is opened in ***Direct***SOFT 5. This can be seen in the diagram below. After the address has been entered, the memory range will appear. Also, entering the number of PID loops (1 to 8) will set the total V-memory range for the number of loops entered. After the V-memory address has been entered, the necessary PID parameters for a basic loop

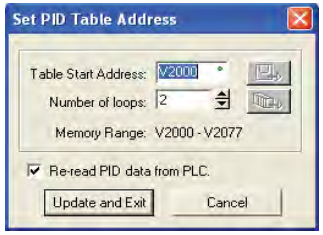

operation for each loop can be setup with the dialogs made available.

NOTE: Have an edited program open, then click on PLC > Setup > PID to access the Setup PID dialog.

Loop Table Word Definitions

These are the loop parameters associated with each of the four loops available in the DL05. The parameters are listed in the following table. The address offset is in octal, to help you locate specific parameters in the loop table. For example, if a table begins at V2000, then the location for the reset (integral) term is Addr+11, or V2011. Do not use the Word # (in the first column) to calculate addresses.

Word #	Address+Offset	Description	Format	Read on-the- fly***
1	Addr + 0	PID Loop Mode Setting 1	bits	Yes
2	Addr + 1	PID Loop Mode Setting 2	bits	Yes
3	Addr + 2	Setpoint Value (SP)	word/binary	Yes
4	Addr + 3	Process Variable (PV)	word/binary	Yes
5	Addr + 4	Bias (Integrator) Value	word/binary	Yes
6	Addr + 5	Control Output Value	word/binary	Yes
7	Addr + 6	Loop Mode and Alarm Status	bits	–
8	Addr + 7	Sample Rate Setting	word/BCD	Yes
9	Addr + 10	Gain (Proportional) Setting	word/BCD	Yes
10	Addr + 11	Reset (Integral) Time Setting	word/BCD	Yes
11	Addr + 12	Rate (Derivative) Time Setting	word/BCD	Yes
12	Addr + 13	PV Value, Low-low Alarm	word/binary	No*
13	Addr + 14	PV Value, Low Alarm	word/binary	No*
14	Addr + 15	PV Value, High Alarm	word/binary	No*
15	Addr + 16	PV Value, High-high Alarm	word/binary	No*
16	Addr + 17	PV Value, deviation alarm (YELLOW)	word/binary	No*
17	Addr + 20	PV Value, deviation alarm (RED)	word/binary	No*
18	Addr + 21	PV Value, rate-of-change alarm	word/binary	No*
19	Addr + 22	PV Value, alarm hysteresis setting	word/binary	No*
20	Addr + 23	PV Value, error deadband setting	word/binary	Yes
21	Addr + 24	PV low-pass filter constant	word/BCD	Yes
22	Addr + 25	Loop derivative gain limiting factor setting	word/BCD	No**
23	Addr + 26	SP value lower limit setting	word/binary	Yes
24	Addr + 27	SP value upper limit setting	word/binary	Yes
25	Addr + 30	Control output value lower limit setting	word/binary	No**
26	Addr + 31	Control output value upper limit setting	word/binary	No**
27	Addr + 32	Remote SP Value V-Memory Address Pointer	word/hex	Yes
28	Addr + 33	Ramp/Soak Setting Flag	bit	Yes
29	Addr + 34	Ramp/Soak Programming Table Starting Address	word/hex	No**
30	Addr + 35	Ramp/Soak Programming Table Error Flags	bits	No**
31	Addr + 36	PV direct access, channel number	word/hex	Yes
32	Addr + 37	Control output direct access, channel number	word/hex	Yes

* Read data only when alarm enable bit transitions from 0 to 1.
** Read data only on PLC Mode change.
*** Read on-the-fly means that the content of V-memory can be changed while the PID loop is in operation.

PID Mode Setting 1 Bit Descriptions (Addr + 00)

The individual bit definitions of the PID Mode Setting 1 word (Addr+00) are listed in the following table.

Bit	PID Mode Setting 1 Description	Read/Write	Bit=0	Bit=1
0	Manual Mode Loop Operation request	write	–	01 request
1	Automatic Mode Loop Operation request	write	–	01 request
2	Cascade Mode Loop Operation request	write	–	01 request
3	Bumpless Transfer select	write	Mode I	Mode II
4	Direct or Reverse-Acting Loop select	write	Direct	Reverse
5	Position / Velocity Algorithm select	write	Position	Velocity
6	PV Linear / Square Root Extract select	write	Linear	Sq. root
7	Error Term Linear / Squared select	write	Linear	Squared
8	Error Deadband enable	write	Disable	Enable
9	Derivative Gain Limit select	write	Off	On
10	Bias (Integrator) Freeze select	write	Off	On
11	Ramp/Soak Operation select	write	Off	On
12	PV Alarm Monitor select	write	Off	On
13	PV Deviation alarm select	write	Off	On
14	PV rate-of-change alarm select	write	Off	On
15	Loop mode is independent from CPU mode when set	write	Loop with CPU mode	Loop Independent of CPU mode

PID Mode Setting 2 Bit Descriptions (Addr + 01)

The individual bit definitions of the PID Mode Setting 2 word (Addr+01) are listed in the following table.

Bit	PID Mode 2 Word Description	Read/Write	Bit=0	Bit=1
0	Input (PV) and Control Output Range Unipolar/Bipolar select (See Notes 1 and 2)	write	unipolar	bipolar
1	Input/Output Data Format select (See Notes 1 and 2)	write	12 bit	15 bit
2	Analog Input filter	write	off	on
3	SP Input limit enable	write	disable	enable
4	Integral Gain (Reset) units select	write	seconds	minutes
5	Select Auto tune PID algorithm	write	closed loop	open loop
6	Auto tune selection	write	PID	PI only (rate = 0)
7	Auto tune start (See Note 1)	read/write	auto tune cancel/done	force start
8	PID Scan Clock (internal use)	read	–	–
9	Input/Output Data Format 16-bit select (See Notes 2 and 3)	write	not 16 bit	select 16 bit
10	Select separate data format for input and output (See Notes 3, and 4)	write	same format	separate formats
11	Control Output Range Unipolar/Bipolar select See Notes 3, and 4)	write	unipolar	bipolar
12	Output Data Format select (See Notes 3, and 4)	write	12 bit	15 bit
13	Output data format 16-bit select (See Notes 3, and 4)	write	not 16 bit	select16 bit
14–15	Reserved for future use	–	–	–

NOTE 1: Bit 7 can be used to cancel Autotune mode by setting it to 0.

NOTE 2: If the value in bit 9 is 0, then the values in bits 0 and 1 are read. If the value in bit 9 is 1, then the values in bits 0 and 1 are not read, and bit 9 defines the data format (the range is automatically unipolar).

NOTE 3: If the value in bit 10 is 0, then the values in bits 0, 1, and 9 define the input and output ranges and data formats (the values in bits 11, 12, and 13 are not read). If the value in bit 10 is 1, then the values in bits 0, 1, and 9 define only the input range and data format, and bits 11, 12, and 13 are read and define the output range and data format.

NOTE 4: If bit 10 has a value of 1 and bit 13 has a value of 0, then bits 11 and 12 are read and define the output range and data format. If bit 10 and bit 13 each have a value of 1, then bits 11 and 12 are not read, and bit 13 defines the data format (the output range is automatically unipolar).

Mode/Alarm Monitoring Word (Addr + 06)

The individual bit definitions of the Mode / Alarm monitoring (Addr+06) word is listed in the following table.

Bit	Mode/Alarm Bit Description	Read/Write	Bit=0	Bit=1
0	Manual Mode Indication	read	–	Manual
1	Automatic Mode Indication	read	–	Auto
2	Cascade Mode Indication	read	–	Cascade
3	PV Input LOW–LOW Alarm	read	Off	On
4	PV Input LOW Alarm	read	Off	On
5	PV Input HIGH Alarm	read	Off	On
6	PV Input HIGH–HIGH Alarm	read	Off	On
7	PV Input YELLOW Deviation Alarm	read	Off	On
8	PV Input RED Deviation Alarm	read	Off	On
9	PV Input Rate-of-Change Alarm	read	Off	On
10	Alarm Value Programming Error	read	–	Error
11	Loop Calculation Overflow/Underflow	read	–	Error
12	Loop in Auto-Tune indication	read	Off	On
13	Auto-Tune error indication	read	–	Error
14–15	Reserved for Future Use	–	–	–

Ramp/Soak Table Flags (Addr + 33)

The individual bit definitions of the Ramp/Soak Table Flag (Addr+33) word is listed in the following table.

Bit	Ramp/Soak Flag Bit Description	Read/Write	Bit=0	Bit=1
0	Start Ramp / Soak Profile	write	–	01 Start
1	Hold Ramp / Soak Profile	write	–	01 Hold
2	Resume Ramp / soak Profile	write	–	01 Resume
3	Jog Ramp / Soak Profile	write	–	01 Jog
4	Ramp / Soak Profile Complete	read	–	Complete
5	PV Input Ramp / Soak Deviation	read	Off	On
6	Ramp / Soak Profile in Hold	read	Off	On
7	Reserved	read	–	–
8–15	Current Step in R/S Profile	read	decode as byte (hex)	

Bits 8–15 must be read as a byte to indicate the current segment number of the Ramp/Soak generator in the profile. This byte will have the values 1, 2, 3, 4, 5, 6, 7, 8, 9, A, B, C, D, E, F, and 10, which represent segments 1 to 16 respectively. If the byte=0, then the Ramp/Soak table is not active.

Ramp/Soak Table Location (Addr + 34)

Each loop that you configure has the option of using a built-in Ramp/Soak generator dedicated to that loop. This feature generates SP values that follow a profile. To use the Ramp Soak feature, you must program a separate table of 32 words with appropriate values. A *Direct*SOFT 5 dialog box makes this easy to do.

In the loop table, the Ramp/Soak Table Pointer at Addr+34 must point to the start of the ramp/soak data for that loop. This may be anywhere in user memory, and does not have to adjoin to the Loop Parameter table, as shown to the left. Each R/S table requires 32 words, regardless of the number of segments programmed.

The ramp/soak table parameters are defined in the table below. Further details are in the section on Ramp/Soak Operation in chapter 8.

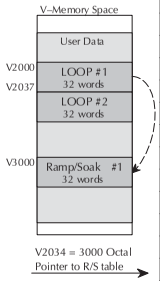

Addr Offset	Step	Description	Addr Offset	Step	Description
+ 00	1	Ramp End SP Value	+ 20	9	Ramp End SP Value
+ 01	1	Ramp Slope	+ 21	9	Ramp Slope
+ 02	2	Soak Duration	+ 22	10	Soak Duration
+ 03	2	Soak PV Deviation	+ 23	10	Soak PV Deviation
+ 04	3	Ramp End SP Value	+ 24	11	Ramp End SP Value
+ 05	3	Ramp Slope	+ 25	11	Ramp Slope
+ 06	4	Soak Duration	+ 26	12	Soak Duration
+ 07	4	Soak PV Deviation	+ 27	12	Soak PV Deviation
+ 10	5	Ramp End SP Value	+ 30	13	Ramp End SP Value
+ 11	5	Ramp Slope	+ 31	13	Ramp Slope
+ 12	6	Soak Duration	+ 32	14	Soak Duration
+ 13	6	Soak PV Deviation	+ 33	14	Soak PV Deviation
+ 14	7	Ramp End SP Value	+ 34	15	Ramp End SP Value
+ 15	7	Ramp Slope	+ 35	15	Ramp Slope
+ 16	8	Soak Duration	+ 36	16	Soak Duration
+ 17	8	Soak PV Deviation	+ 37	16	Soak PV Deviation

Ramp/Soak Table Programming Error Flags (Addr + 35)

The individual bit definitions of the Ramp/Soak Table **Programming Error Flags** word (Addr+35) is listed in the following table. Further details are given in the PID Loop Mode section and in the PV Alarm section later in chapter 8.

Bit	R/S Error Flag Bit Description	Read/Write	Bit=0	Bit=1
0	Starting Addr out of lower V-memory range	read	–	Error
1	Starting Addr out of upper V-memory range	read	–	Error
2–3	Reserved for Future Use	–	–	–
4	Starting Addr in System Parameter V-memory Range	read	–	Error
5–15	Reserved for Future Use	–	–	–

Configure the PID Loop

Once the PID table is established in V-memory, configuring the PID loop continues with the *Direct*SOFT 5 PID setup configuration dialog. You will need to check and fill in the data required to control the PID loop. Select Configure and the following dialog will appear for this process.

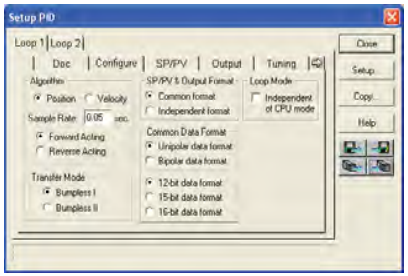

Select the Algorithm Type

Chose either *Position* or *Velocity*. The default algorithm is Position. This is the choice for most applications which include heating and cooling loops as well as most position an level control loops. A typical velocity control will consist of a process variable such as a flow totalizer in a flow control loop.

Enter the Sample Rate

The main tasks of the CPU fall into categories as shown to the right. The list represents the tasks done when the CPU is in Run Mode, on each PLC scan. Note that PID loop calculations occur after the ladder logic task.

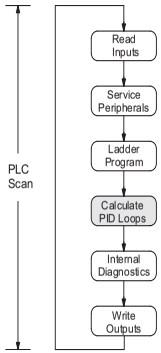

The *sample rate* of a control loop is simply the frequency of the PID calculation. Each calculation generates a new control output value. With the DL05 CPU, you can set the sample rate of a loop from 50 ms to 99.99 seconds. Most loops do not require a fresh PID calculation on every PLC scan. Some loops may need to be calculated only once in 1000 scans.

Enter 0.05 sec., or the sample rate of your choice, for each loop, and the CPU automatically schedules and executes PID calculations on the appropriate scans.

Select Forward/Reverse

It is important to know which direction the control output will respond to the error (SP-PV), either *forward* or *reverse*. A forward (direct) acting control loop means that whenever the control output increases, the process variable will also increase. The control output of most PID loops are forward acting, such as a heating control loop. An increase in heat applied will increase the PV (temperature).

A reverse acting control loop is one where an increase in the control output results in a decrease in the PV. A common example of this would be a refrigeration system, where an increase in the cooling input causes a decrease in the PV (temperature).

The Transfer Mode

Choose either Bumpless I or Bumpless II to provide a smooth transition of the control output from Manual Mode to Auto Mode. Choosing Bumpless I will set the SP equal to the PV when the control output is switched from Manual to Auto. If this is not desired, choose BumplessII.

The characteristics of Bumpless I and II transfer types are listed in the chart below. Note that their operation also depends on which PID algorithm you are using, the position or velocity form of the PID equation. Note that you must use Bumpless Transfer type I when using the velocity form of the PID algorithm.

8

TransferType	Transfer Select Bit 3	PID Algorithm	Manual-to-Auto Transfer Action	Auto-to-Cascade Transfer Action
Bumpless Transfer I	0	Position	Forces Bias = Control Output Forces SP = PV	Forces Major Loop Output = Minor Loop PV
		Velocity	Forces SP = PV	Forces Major Loop Output = Minor Loop PV
Bumpless Transfer II	1	Position	Forces Bias = Control Output	none
		Velocity	none	none

The transfer type can also be selected in a RLL program by setting bit 3 of PID Mode 1, V+00 setting as shown.

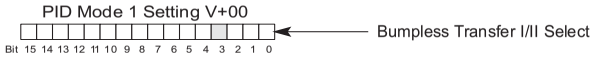

SP/PV & Output Format

This block allows you to select either *Common format* or *Independent format*. Common format is the default and is most commonly used. With this format both SP/PV and Output will have the same data structure. Both will have the same number of bits and either bipolar or unipolar. If Independent format is selected, the data structure selections will be grayed out. The reason for this is that they become independently selectable in the *SP/PV* and the *Output* dialogs.

Common Data Format

Select either *Unipolar data format* (which is positive data only) in 12 bit (0 to 4095), 15 bit (0 to 32767) or 16 bit (0 to 65535) format, or *Bipolar data format* which ranges from negative to positive (-4095 to 4095 or -32767 to 32767) and requires a sign bit. Bipolar selection displays input/output as magnitude plus sign, not two's compliment. The bipolar selection is not available when 16-bit data format is selected.

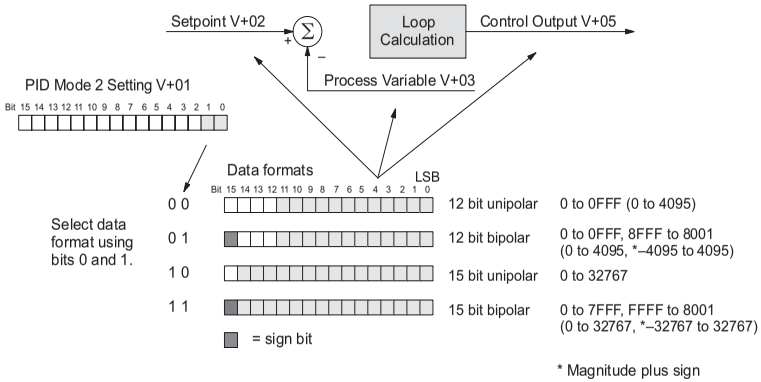

The data format determines the numerical interface between the PID loop and the PV sensor, and the control output device. This selects the data format for both the SP and the PV.

8

Loop Mode

Loop Mode is a special feature that allows the PID loop controller to perform closed-loop control while the CPU is in the Program Mode. Careful thought must be taken before using this feature called *Independent of CPU mode* in the dialog. Before continuing with the PID setup, a knowledge of the three PID loop modes will be helpful.

The DL05 provides the three standard control modes: *Manual, Automatic,* and *Cascade*. The sources of the three basic variables SP, PV and control output are different for each mode.

In Manual Mode, the loop is not executing PID calculations (however, loop alarms are still active). With regard to the loop table, the CPU stops writing values to location V+05 (control output) for that loop. *It is expected that an operator or other intelligent source* is manually controlling the output by observing the PV and writing data to the control output as necessary to keep the process under control. The drawing below shows the equivalent schematic diagram of manual mode operation.

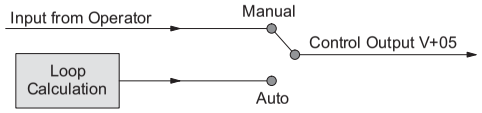

In Automatic Mode, the loop operates normally and generates new control output values. It calculates the PID equation and writes the result in location V+05 every sample period of that loop. The equivalent schematic diagram is shown below.

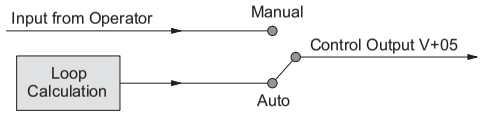

In Cascade Mode, the loop operates as it does in Automatic Mode, with one important difference. The data source for the SP changes from its normal location at V+02 to using the control output value, V+05, from another loop. So in Auto or Manual modes, the loop calculation uses the data at V+02. In Cascade Mode, the loop calculation reads the control output from another loop's parameter table, V+05.

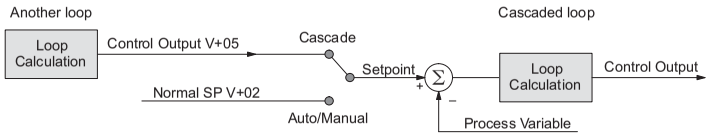

As pictured below, a loop can be changed from one mode to another, but *cannot go from Manual Mode directly to Cascade, or vice versa*. This mode change is prohibited because a loop would be changing two data sources at the same time, and could cause a loss of control.

8

Once the CPU is operating in the Run Mode, the normal operation of the PID loop controller is to read the loop data and perform calculations on each scan of the RLL program. When the CPU is placed in the Program Mode, the RLL program halts operation and all PID loops are automatically put into the Manual Mode. The PID parameters can then be changed if desired. Similarly, by placing the CPU in the Run mode, the PID loops are returned to the operational mode which they were previously in, i.e., Manual, Automatic and Cascade. With this selection you automatically affect the modes by changing the CPU mode.

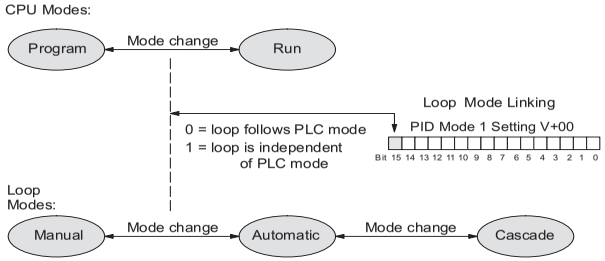

If bit 15 is set to one, then the loops will run independent of the CPU mode. It is like having two independent processors in the CPU...one is running the RLL program and the other is running the process loops.

Having the ability to run loops independently of the RLL program makes it feasible to make a ladder logic change while the process is still running. This is especially beneficial for large-mass continuous processes that are difficult or costly to interrupt. The independent of CPU is the feature used for this.

If you need to operate the PID loops while the RLL program is halted, in Program Mode, either select the Independent of CPU mode in the dialog or edit your program to set and reset bit 15 of PID Mode 1 word (V+00) in your RLL program. If the bit is set to a zero, the loop will follow the CPU mode, then when the CPU is placed in the Program Mode, all loops will be forced into the Manual Mode.

When Independent of CPU mode is used, you should also set the PV to be read directly from an analog input module. This can easily be done in the PID setup dialog, SP/PV.

The SP/PV dialog has a block entitled *Process Variable*. There is a block within this block called *Auto Transfer From* (from analog input) with the information grayed out. Checking the box to the left of the Auto Transfer From will high-light the information. There are two choices to select for the auto transfer. The first choice is *I/O Module*. If this is selected, the Slot number "F" and the Channel number will automatically appear. Since there is only one option slot in the DL05, the letter F represents the default option slot. Also, select the analog input channel of your choice.

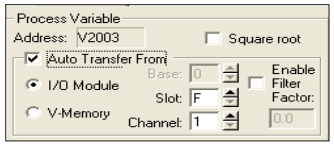

8

The second choice is *V-Memory*. When this is selected, the V-memory address from where the PV is transferred from must be specified.

Whichever method of auto transfer is used, it is recommended to check the *Enable Filter Factor* (a low pass filter) and specify the coefficient.

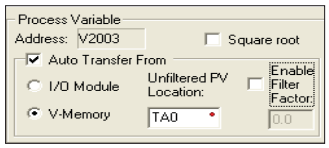

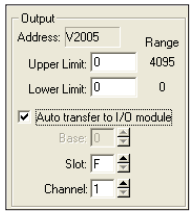

You should also select the analog output for the control output to be transferred to. This is done in the PID setup *Output* dialog shown here. The block of information in this dialog is "grayed-out" until the box next to *Auto transfer to I/O module* is checked. Once checked, the slot number defaults to "F" like the input, and the analog output channel can be selected.

NOTE: To make changes to any loop table parameters, the PID loop must be in Manual mode and the PLC must be stopped. If you have selected to operate the PID loop independent of the CPU mode, then you must take certain steps to make it possible to make loop parameter changes. You can temporarily make the loops follow the CPU mode by changing bit 15 to 0. Then you will be able to place the loop into Manual Mode using ***Direct****SOFT 5. After you change the loop's parameter settings, just restore bit 15 to a value of 1 to re-establish PID operation independent of CPU.*

You may optionally configure each loop to access its analog I/O (PV and control output) by placing proper values in the associated loop table registers in your RLL program. The following figure shows the loop table parameters at V+36 and V+37 and their auto transfer role to access the analog values directly.

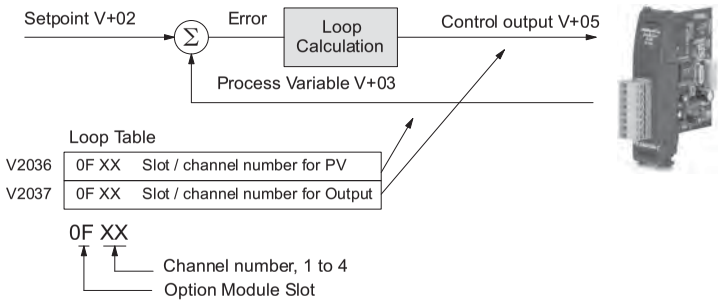

When these loop table parameters are programmed directly, a value of "0F02" in register V2036 directs the loop controller to read the PV data from channel 1 of the analog input. A value of "0000" in either register tells the loop controller not to access the corresponding analog value directly. In that case, ladder logic must be used to transfer the value between the analog input and the loop table.

NOTE: When auto transfer to/from I/O is used, the analog data for all of the channels on the analog module cannot be accessed by any other method, i.e., pointer or multiplex.

SP/PV Addresses

An SP/PV dialog will be made available to setup how the setpoint (SP) and the process variable (PV) will be used in the loop. If this loop is the minor loop of a cascaded pair, enter that control output address in the *Remote SP from Cascaded Loop Output* area. It is sometimes desirable to limit the range of setpoint values allowed to be entered. To activate this feature, check the box next to *Enable Limiting*. This will activate the *Upper* and *Lower* fields for the values to be entered. Set the limits around the SP value to prevent an operator from entering a

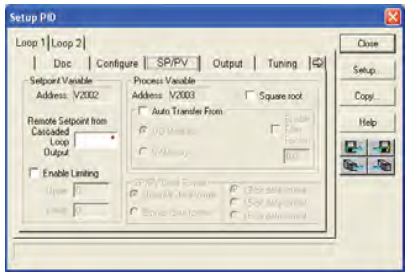

setpoint value outside of a safe range. The *Square root* box is only checked for certain PID loops, such as a flow control loop. If the *Auto transfer from I/O module* is selected, a first-order low-pass filter can be used by checking the *Enable Filter* box. The filter coefficient is user specified. The use of this filter is recommended during closed loop auto-tuning. If the Independent format had been checked previously, make the Data format selections here.

NOTE: The SP/PV dialog can be left as it first appears for basic PID operation.

Set Control Output Limits

Another dialog that will be available in the PID setup will be the Output dialog. The control output address, V+05, (determined by the PID loop table beginning address) will be in view. Enter the output range limits, *Upper Limit* and *Lower Limit,* that will meet the requirement of the process and which will agree with the data format that has been selected. For a basic PID operation using a 12 bit output module, set the Upper Limit to 4095 and leave the

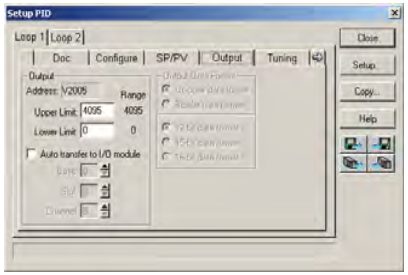

Lower Limit set to 0. Check the box next for *Auto transfer to I/O module* if there is a need to send the control output to a certain analog output module, as in the case of using the Loop Mode independent of CPU Mode; otherwise, the PID output signal cannot control the analog output when the PLC is not in RUN Mode. If the *Auto transfer to I/O module* feature is checked, all channels of the module must be used for PID control outputs. If Independent format has been previously chosen, the *Output Data Format* will need to be setup here, that is, select Unipolar or Bipolar format and the bit structure. This area is not available and is grayed out if *Common format* has been chosen (see page 8-26).

WARNING: If the Upper Limit is set to zero, the output will never get above zero. In effect, there will be no control output.

Enter PID Parameters

Another PID setup dialog, Tuning, is for entering the PID parameters shown as: Gain (Proportional Gain), Reset (Integral Gain) and Rate (Derivative Gain).

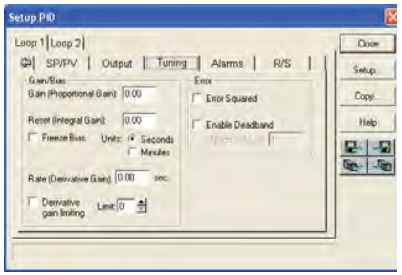

Recall the position and velocity forms of the PID loop equations which were introduced earlier. The equations basically show the three components of the PID calculation: Proportional Gain (P), Integral Gain (I) and Derivative Gain (D). The following diagram shows a form of the PID calculation in which the control output is the sum of the proportional gain, integral gain and derivative gain. With each calculation of the loop, each term receives the same error signal value.

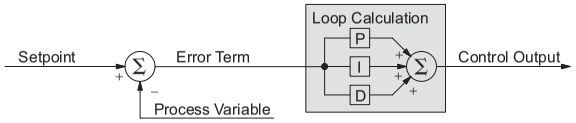

The P, I and D gains are 4-digit BCD numbers with values from 0000 to 9999. They contain an implied decimal point in the middle, so the values are actually 00.00 to 99.99. Some gain values have units – Proportional gain has no unit, Integral gain may be selected in seconds or in minutes, and Derivative gain is in seconds.

Gain (Proportional Gain) – This is the most basic gain of the three. Values range from 0000 to 9999, but they are used internally as xx.xx. An entry of "0000" effectively removes the proportional term from the PID equation. This accommodates applications which need integral-only loops.

Reset (Integral Gain) – Values range from 0001 to 9998, but they are used internally as xx.xx. An entry of "0000" or "9999" causes the integral gain to be "∞", effectively removing the integrator term from the PID equation. This accommodates applications which need proportional-only loops. The units of integral gain may be either seconds or minutes, as shown in the above dialog.

Rate (Derivative Gain) – Values which can be entered range from 0001 to 9999, but they are used internally as XX.XX. An entry of "0000" allows removal of the derivative term from the PID equation (a common practice). This accommodates applications which require only proportional and/or integral loops. Most control loops will operate as a PI loop.

*NOTE: You may elect to leave the tuning dialog blank and enter the tuning parameters in the **Direct**SOFT 5 PID View.*

Derivative Gain Limiting

The derivative gain (rate) has an optional gain-limiting feature. This is provided because the derivative gain reacts badly to PV signal noise or other causes of sudden PV fluctuations. The function of the gain-limiting is shown in the diagram below.

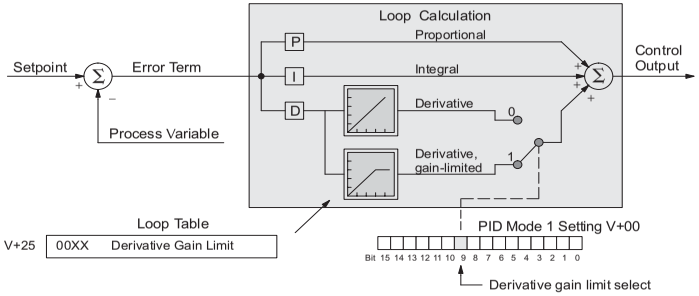

The gain limit can be particularly useful during loop tuning. Most loops can tolerate only a little derivative gain without going into uncontrolled oscillations.

If this option is checked, a unit of 0 to 20 for *Limit* must also be entered.

*NOTE: When first configuring a loop, it's best to use the standard error term until after the loop is tuned. Once the loop is tuned, you will be able to tell if these functions will enhance control. The Error Squared and/or Enable Deadband can be selected later in the PID setup. Also, values are not required to be entered in the Tuning dialog, but they can set later in the **Direct**SOFT 5 PID View.*

Error Term Selection

The error term is internal to the CPUs PID loop controller, and is generated again in each PID calculation. Although its data is not directly accessible, you can easily calculate it by subtracting: Error = (SP–PV). The PID calculation operates on this value linearly to give the result. However, a few applications can benefit from non-linear control. The Error-squared methnod of non-linear control exaggerates large errors and diminishes small error.

Error Squared – When selected, the squared error function simply squares the error term (but preserves the original algebraic sign), which is used in the calculation. This affects the Control Output by diminishing its response to smaller error values, but maintaining its response to larger errors. Some situations in which the error squared term might be useful:

- Noisy PV signal – using a squared error term can reduce the effect of low-frequency electrical noise on the PV, which will make the control system jittery. A squared error maintains the response to larger errors.
- Non-linear process – some processes (such as chemical pH control) require non-linear controllers for best results. Another application is surge tank control, where the Control Output signal must be smooth.

Enable Deadband – When selected, the enable deadband function takes a range of small error values near zero, and simply substitutes zero as the value of the error. If the error is larger than the deadband range, then the error value is used normally.

Freeze Bias

The term *reset windup* refers to an undesirable characteristic of integrator behavior which occurs naturally under certain conditions. Refer to the figure below. Suppose the PV signal becomes disconnected, and the PV value goes to zero. While this is a serious loop fault, it is made worse by reset windup. Notice the bias (reset) term keeps integrating normally during the PV disconnect, until its upper limit is reached. When the PV signal returns, the bias value is saturated (windup) and takes a long time to return to normal. The loop output consequently has an extended recovery time. Until recovery, the output level is wrong and causes further problems.

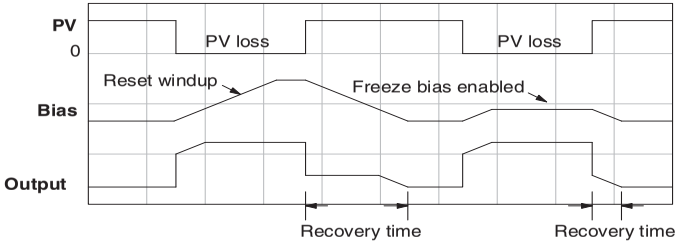

In the second PV signal loss episode in the figure, the freeze bias feature is enabled. It causes the bias value to freeze when the control output goes to its range limit. Much of the reset windup is thus avoided, and the output recovery time is much less.

For most applications, the freeze bias feature will work with the loop as described above. It is suggested to enable this feature by selecting it in the dialog. Bit 10 of PID Mode 1 Setting (V+00) word can also be set in RLL.

NOTE: The freeze bias feature stops the bias term from changing when the control output reaches the end of the data range. If you have set limits on the control output other than the range (i.e, 0–4095 for a unipolar/12bit loop), the bias term still uses the end of range for the stopping point and bias freeze will not work.

Setup the PID Alarms

Although the setup of the PID alarms is optional, you surely would not want to operate a process without monitoring it. The performance of a process control loop may generally be measured by how closely the process variable matches the setpoint. Most process control loops in industry operate continuously, and will eventually lose control of the PV due to an error condition. Process alarms are vital in early discovery of a loop error condition and can alert plant personnel to manually control a loop or take other measures until the error condition has been repaired.

The alarm thresholds are fully programmable, and each type of alarm may be independently enabled and monitored. The following diagram shows the Alarm dialog in the PID setup which simplifies the alarm setup.

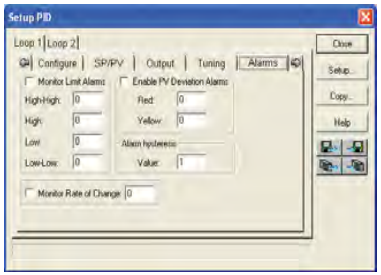

Monitor Limit Alarms

Checking this box will allow all of the PV limit alarms to be monitored once the limits are entered. The PV absolute value alarms are organized as two upper and two lower alarms. The alarm status is false as long as the PV value remains in the region between the upper and lower alarms, as shown below. The alarms nearest the safe zone are named *High Alarm* and *Low Alarm*. If the loop loses control, the PV will cross one of these thresholds first. Therefore, you can program the appropriate alarm threshold values in the loop table locations shown below to the right. The data format is the same as the PV and SP (12-bit or 15-bit). The threshold values for these alarms should be set to give an operator an early warning if the process loses control.

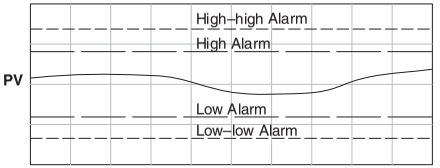

Loop Table

V+16	XXXX	High-high Alarm
V+15	XXXX	High Alarm
V+14	XXXX	Low Alarm
V+13	XXXX	Low-low Alarm

*NOTE: The Alarm dialog can be left as it first appears, without alarm entries. The alarms can then be setup in the **Direct**SOFT 5 PID View.*

If the process remains out of control for some time, the PV will eventually cross one of the outer alarm thresholds, named High-high alarm and Low-low alarm. Their threshold values are programmed using the loop table registers listed above. A High-high or Low-low alarm indicates a serious condition exists, and needs the immediate attention of the operator.

The PV Absolute Value Alarms are reported in the four bits in the PID Mode and Alarm Status word in the loop table, as shown to the right. We highly recommend using ladder logic to monitor these bits. The bit-of-word instructions make this easy to do. Additionally, you can monitor PID alarms using *Direct*SOFT 5.

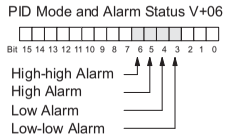

PV Deviation Alarms

The PV Deviation Alarms monitor the PV deviation with respect to the SP value. The deviation alarm has two programmable thresholds, and each threshold is applied equally above and below the current SP value. In the figure below, the smaller deviation alarm is called the "Yellow Deviation", indicating a cautionary condition for the loop. The larger deviation alarm is called the "Red Deviation", indicating a strong error condition for the loop. The threshold values use the loop parameter table locations V+17 and V+20 as shown.

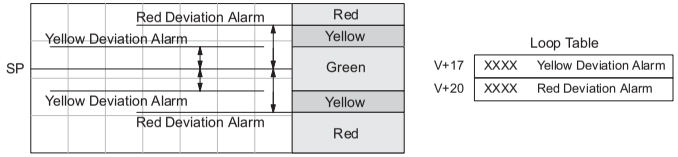

The thresholds define zones, which fluctuate with the SP value. The green zone which surrounds the SP value represents a safe (no alarm) condition. The yellow zones lie outside the green zone, and the red zones are beyond those.

The PV Deviation Alarms are reported in the two bits in the PID Mode and Alarm Status word in the loop table, as shown to the right. We highly recommend using ladder logic to monitor these bits. The bit-of-word instructions make this easy to do. Additionally, you can monitor PID alarms using *Direct*SOFT 5.

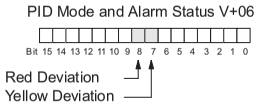

The PV Deviation Alarm can be independently enabled and disabled from the other PV alarms, using bit 13 of the PID Mode 1 Setting V+00 word.

Remember the alarm hysteresis feature works in conjunction with both the deviation and absolute value alarms, and is discussed at the end of this section.

PV Rate-of-Change Alarm

An excellent way to get an early warning of a process fault is to monitor the *rate-of-change* of the PV. Most batch processes have large masses and slowly-changing PV values. A relatively fast-changing PV will result from a broken signal wire for either the PV or control output, a SP value error, or other causes. If the operator responds to a PV Rate-of-Change Alarm quickly and effectively, the PV absolute value will not reach the point where the material in process would be ruined.

The DL05 loop controller provides a programmable PV Rate-of-Change Alarm, as shown below. The rate-of-change is specified in PV units change per loop sample time. This value is programmed into the loop table location V+21.

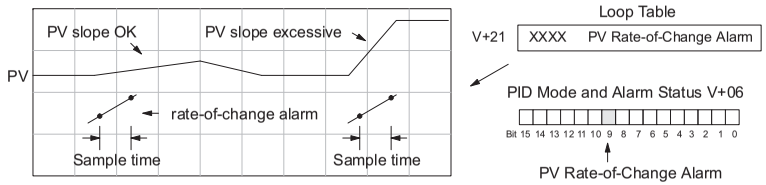

As an example, suppose the PV is the temperature for your process, and you want an alarm whenever the temperature changes faster than 15 degrees/minute. The PV counts per degree and the loop sample rate must be known. Then, suppose the PV value (in V+03 location) represents 10 counts per degree, and the loop sample rate is 2 seconds. Use the formula below to convert our engineering units to counts/sample period:

$$\text{Alarm Rate-of-Change} = \frac{15 \text{ degrees}}{1 \text{ minute}} \times \frac{10 \text{ counts / degree}}{30 \text{ loop samples / min.}} = \frac{150}{30} = 5 \text{ counts / sample period}$$

From the calculation result, you would program the value 5 in the loop table for the rate-of-change. The PV Rate-of-Change Alarm can be independently enabled and disabled from the other PV alarms, using bit 14 of the PID Mode 1 Setting V+00 word.

The alarm hysteresis feature (discussed next) does not affect the Rate-of-Change Alarm.

PV Alarm Hysteresis

The PV Absolute Value Alarm and PV Deviation Alarm are programmed using threshold values. When the absolute value or deviation exceeds the threshold, the alarm status becomes true. Real-world PV signals have some noise on them, which can cause some fluctuation in the PV value in the CPU. As the PV value crosses an alarm threshold, its fluctuations cause the alarm to be intermittent and annoy process operators. The solution is to use the PV Alarm Hysteresis feature.

The PV Alarm Hysteresis amount is programmable from 1 to 200 (binary/decimal). When using the PV Deviation Alarm, the programmed hysteresis amount must be less than the programmed deviation amount. The figure below shows how the hysteresis is applied when the PV value goes past a threshold and descends back through it.

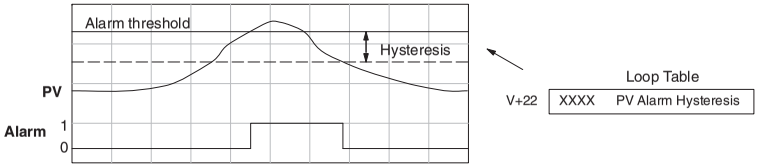

The hysteresis amount is applied after the threshold is crossed, and toward the safe zone. In this way, the alarm activates immediately above the programmed threshold value. It delays turning off until the PV value has returned through the threshold by the hysteresis amount.

Alarm Programming Error

The PV Alarm threshold values must have certain mathematical relationships to be valid. The requirements are listed below. If not met, the Alarm Programming Error bit will be set, as indicated to the right.

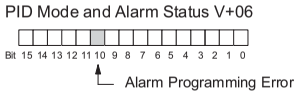

- PV Absolute Alarm value requirements:
  Low-low < Low < High < High-high
- PV Deviation Alarm requirements:
  Yellow < Red

Loop Calculation Overflow/Underflow Error

This error occurs whenever the output reaches its upper or lower limit and the PV does not reach the setpoint. A typical example might be when a valve is stuck, the output is at its limit, but the PV has not reached setpoint.

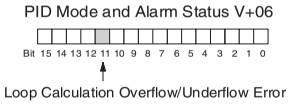

NOTE: Overflow/underflow can be alarmed in PID View. The optional C-more IO panel (see the automationdirect.com website) can also be set up to read these error bits using the PID Faceplate templates.

Ramp/Soak

R/S (Ramp/Soak) is the last dialog available in the PID setup. The basic PID does not require any entries to be made in order to operate the PID loop. Ramp/Soak will be discussed in another section.

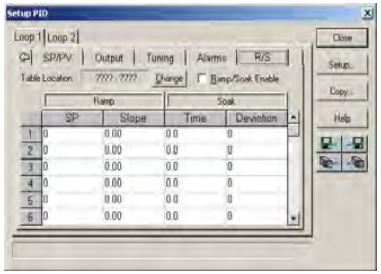

Complete the PID Setup

Once you have filled in the necessary information for the basic PID setup, the configuration should be saved. The icons on the Setup PID dialog will allow you to save the configuration to the PLC and to disk. The save to icons have the arrow pointing to the PLC and disk. The read from icons have the arrows pointing away from the PLC and disk.

An optional feature is available with the Doc tab in the Setup PID window. You enter a name and description for the loop. This is useful if there is more than one PID loop in your application.

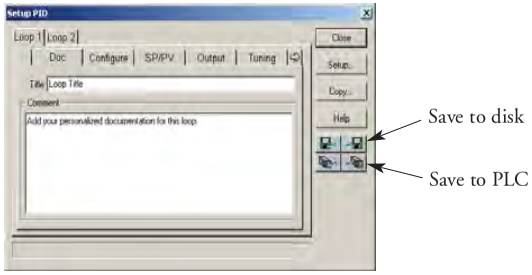

*NOTE: It is good practice to save your project after setting up the PID loop by selecting **File** from the menu toolbar, then **Save project > to disk**. In addition to saving your entire project, all the PID parameters are also saved.*

PID Loop Tuning

Once you have set up a PID loop, it must be tuned in order for it to work. The goal of loop tuning is to adjust the loop gains so the loop has optimal performance in dynamic conditions. The quality of a loop's performance may generally be judged by how well the PV follows the SP after a SP step change. It is important to keep in mind that understanding the process is fundamental to getting a well designed control loop. Sensors must be in appropriate locations and valves must be sized correctly with appropriate trim. **PID control does not have *typical* values**. There isn't one control process that is identical to another.

Manual Tuning vs. Auto Tuning

You may enter the PID gain values to tune your loops (manual tuning), or you can rely on the PID processing "engine" in the CPU to automatically calculate the gain values (auto tuning). Most experienced process engineers will have a favorite method; the DL05 will accommodate either preference. The use of auto tuning can eliminate much of the trial-and-error of the manual tuning approach, especially if you do not have a lot of loop tuning experience. However, performing the auto tuning procedure will get the gains close to optimal values, but additional manual tuning can get the gain values to their optimal values.

8

WARNING: Only authorized personnel fully familiar with all aspects of the process should make changes that affect the loop tuning constants. Using the loop auto tune procedures will affect the process, including inducing large changes in the control output value. Make sure you thoroughly consider the impact of any changes to minimize the risk of injury to personnel or damage to equipment. The auto tune in the DL05 is not intended to be used as a replacement for your process knowledge.

Open-Loop Test

Whether you use manual or auto tuning, it is very important to verify basic characteristics of a newly-installed process before attempting to tune it. With the loop in Manual Mode, verify the following items for each new loop.

- **Setpoint** – verify that the SP source can generate a setpoint. Put the PLC in Run Mode and leave the loop in Manual Mode, then monitor the loop table location V+02 to see the SP value(s). (If you are using the ramp/soak generator, test it now).
- **Process Variable** – verify that the PV value is an accurate measurement, and the PV data arriving in the loop table location V+03 is correct. If the PV signal is very noisy, consider filtering the input either through hardware (RC low-pass filter), or using the filter in this chapter.
- **Control Output** – if it is safe to do so, manually change the output a small amount (perhaps 10%) and observe its affect on the process variable. Verify the process is direct-acting or reverse acting, and check the setting for the control output (inverted or non-inverted). Make sure the control output upper and lower limits are not equal to each other.
- **Sample Rate** – while operating open-loop, this is a good time to find the ideal sample rate (procedure given earlier in this chapter). However, if you are going to use auto tuning, the auto tuning procedure will automatically calculate the sample rate in addition to the PID gains.

Manual Tuning Procedure

It is not necessary to try to obtain the best values for the P, I and D parameters in the PID loop by trial and error. Following is a typical procedure for tuning a temperature control loop which you may use to tune your loop.

Monitor the values of SP, PV and CV with a loop trending instrument or use the PID View feature in ***Direct***SOFT 5 (see page 8-48).

NOTE: We recommend using the PID View Tuning and Trending window to select manual for the vertical scale feature, for both SP/PV area and Bias/Control Output areas. The auto scaling feature would otherwise change the vertical scale on the process parameters and add confusion to the loop tuning process.

- Adjust the gains so the Proportional Gain = 0.5 or 1.0 (1.0 is a good value based on experience), Integral Gain = 9999 (this basically eliminates reset) and Derivative Gain =0000. This disables the integrator and derivative terms, and provides some proportional gain.
- Check the bias value in the PID View and set it to zero.
- Set the SP to a value equal to 50% of the full range.
- Now, select Auto Mode. If the loop will not stay in Auto Mode, check the troubleshooting tips at the end of this chapter. Allow the PV to stabilize around the 50% point of the range.
- Change the SP to the 60% point of the range.

8

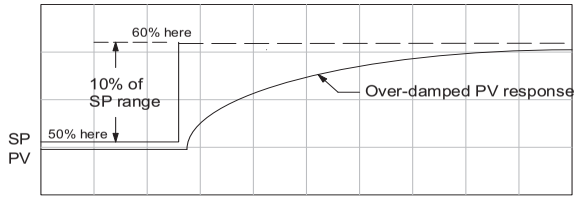

The response may take awhile, but you will see that there isn't any oscillation. This response is not desirable since it takes a long time to correct the error; also, there is a difference between the SP and the PV.

- Increase the Proportional gain, for example to 2.0. The control output will be greater and the response time will be quicker. The trend should resemble the figure below.

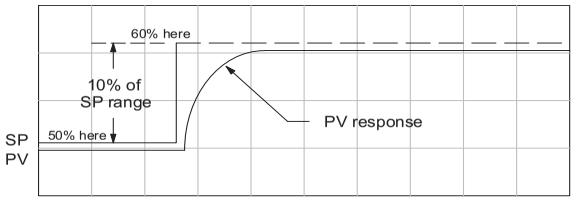

- Increase the Proportional gain in small increments, such as 4, 6, 7, etc. until the control output response begins to oscillate. This is the Proportional gain that should be recorded.

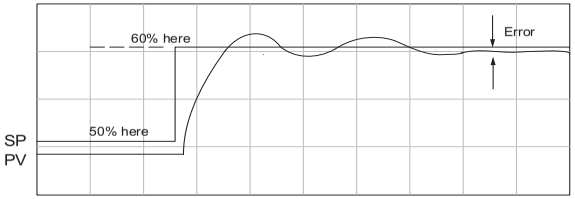

- Now, return the Proportional gain to the stable response, for example, 9.7. The error, SP-PV, should be small, but not at zero.
- Next, add a small amount of Integral gain (reset) in order for the error to reach zero. Begin by using 80 seconds (adjust in minutes if necessary). The error should get smaller.
- Set the Integral gain to a lower value, such as 50 for a different response. If there is no response, continue to decrease the reset value until the response becomes unstable. See the figure below.

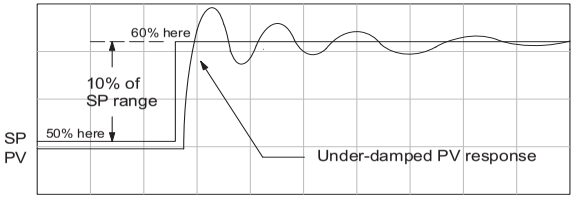

- For discussion, let us say that a reset value of 35 made the control output unstable. Return the reset value to the stable value, such as 38. **Be careful with this adjustment since the oscillation can destroy the process.**
- The control output response should be optimal now, without a Derivative gain. The example recorded values are: Proportional gain = 9.7 and Integral gain = 38 seconds. Note that the error has been minimized.

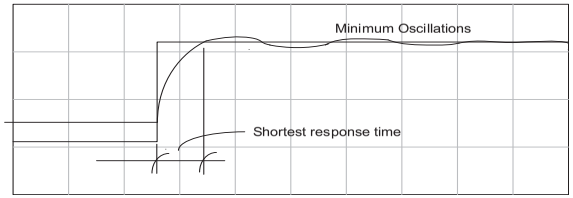

The foregone method is the most common method used to tune a PID loop. Derivative gain is almost never used in a temperature control loop. This method can also be used for other control loops, but other parameters may need to be added for a stable control output.

Test your loop for a high PV of 80% and again for a low PV of 20%, and correct the values if necessary. Small adjustments of the parameters can make the control output more precise or more unstable. It is sometimes acceptable to have a small overshoot to make the control output react quicker.

The derivative gain can be helpful for those control loops which are not controlling temperature. For these loops, try adding a value of 0.5 for the derivative gain and see if this improves the control output. If there is little or no response, increase the derivative by increments of 0.5 until there is an improvement to the output trend. Recall that the derivative gain reacts with a rate of change of the error.

Auto Tuning Procedure

The auto tuning feature for the DL05 loop controller will only run once each time it is enabled in the PID table. Therefore, auto tuning does not run continuously during operation (this would be *adaptive* control). Whenever there is a substantial change in loop dynamics, such as mass of process, size of actuator, etc., the tuning process will need to be repeated in order to derive new gains required for optimal control.

WARNING: Only authorized personnel fully familiar with all aspects of the process should make changes that affect the loop tuning constants. Using the loop auto tuning procedures will affect the process, including inducing large changes in the control output value. Make sure you thoroughly consider the impact of any changes to minimize the risk of injury to personnel or damage to equipment. The auto tune in the DL05 is not intended to be used as a replacement for your process knowledge.

Once the physical loop components are connected to the PLC, auto tuning can be initiated within ***Direct***SOFT 5 (see the ***Direct***SOFT 5 Programming Software Manual), and it can be used to establish initial PID parameter values. Auto tuning is the best "guess" the CPU can do after some trial tests.

8

The loop controller offers both closed-loop and open-loop methods. The following sections describe how to use the auto tuning feature, and what occurs in open and closed-loop auto tuning.

The controls for the auto tuning function use three bits in the PID Mode 2 word V+01, as shown below. ***Direct***SOFT 5 will manipulate these bits automatically when you use the auto tune feature within ***Direct***SOFT 5. Or, you may have your ladder logic access these bits directly for allowing control from another source such as a dedicated operator interface. The individual control bits allow you to start the auto tune procedure, select PID or PI tuning and select closed-loop or open-loop tuning. If you select PI tuning, the auto tune procedure leaves the derivative gain at 0. The Loop Mode and Alarm Status word V+06 reports the auto tune status as shown. Bit 12 will be on (1) during the auto tune cycle, automatically returning to off (0) when done.

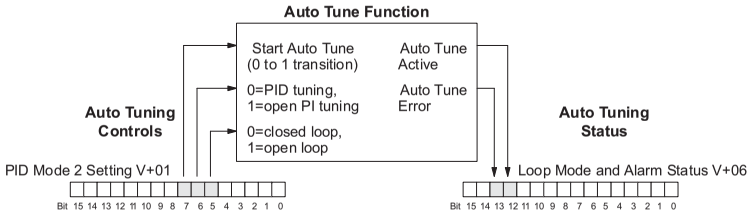

Open-Loop Auto Tuning

During an open-loop auto tuning cycle, the loop controller operates as shown in the diagram below. Before starting this procedure, place the loop in Manual Mode and ensure the PV and control output values are in the middle of their ranges (away from the end points).

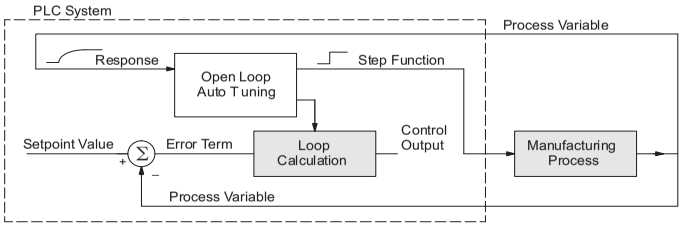

NOTE: In theory, the SP value does not matter in this case, because the loop is not closed. However, the requirement of the firmware is that the SP value must be more than 5% of the PV range from the actual PV before starting the auto tune cycle (for the DL05, 12 bit PV should be 205 counts or more below the SP for forward-acting loops, or 205 counts or more above the SP for reverse-acting loops).

8

When auto tuning, the loop controller induces a step change on the output and simply observes the response of the PV. From the PV response, the auto tune function calculates the gains and the sample time. It automatically places the results in the corresponding registers in the loop table.

The following timing diagram shows the events which occur in the open-loop auto tuning cycle. The auto tune function takes control of the control output and induces a 10%-of-span step change. If the PV change which the loop controller observes is less than 2%, then the step change on the output is increased to 20%-of-span.

* When Auto Tune starts, step change output m=10%
* During Auto Tune, the controller output reached the full scale positive limit. Auto Tune stopped and the Auto Tune Error bit in the Alarm word bit turned on.
* When PV change is under 2%, output is changed at 20%. Open Loop Auto Tune Cycle Wave: Step Response Method

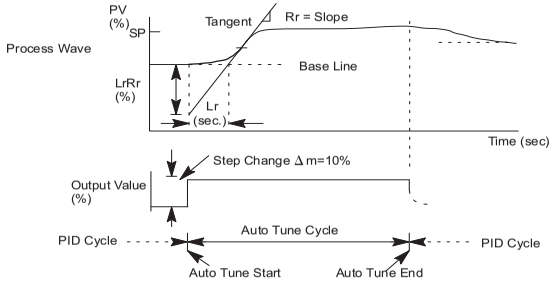

When the loop tuning observations are complete, the loop controller computes Rr (maximum slope in %/sec.) and Lr (dead time in sec). The auto tune function computes the gains according to the Zeigler-Nichols equations, shown below:

PID Tuning	PI Tuning
P = 1.2*Δm/LrRr	P = 0.9*Δm/LrRr
I = 2.0* Lr	I = 3.33* Lr
D = 0.5* Lr	D = 0
Sample Rate = 0.056* Lr	Sample Rate = 0.12*Lr
Δm = Output step change (10% = 0.1, 20% = 0.2)	

We highly recommend using *Direct*SOFT 5 for the auto tuning interface. The duration of each auto tuning cycle will depend on the mass of the process. A slowly-changing PV will result in a longer auto tune cycle time. When the auto tuning is complete, the proportional, integral, and derivative gain values are automatically updated in loop table locations V+10, V+11, and V+12 respectively. The sample time in V+07 is also updated automatically. You can test the validity of the values the auto tuning procedure yields by measuring the closed-loop response of the PV to a step change in the output. The instructions on how to do this are in the section on the manual tuning procedure (located prior to this auto tuning section).

8

Closed-Loop Auto Tuning

During a closed-loop auto tuning cycle the loop controller operates as shown in the diagram below.

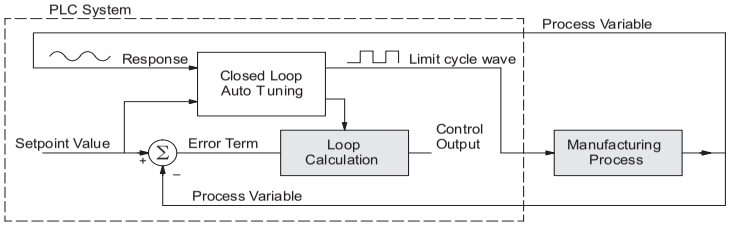

When auto tuning, the loop controller imposes a square wave on the output. Each transition of the output occurs when the PV value crosses over/under the SP value. Therefore, the frequency of the limit cycle is roughly proportional to the mass of the process. From the PV response, the auto tune function calculates the gains and the sample time. It automatically places the results in the corresponding registers in the loop table.

The following timing diagram shows the events which occur in the closed-loop auto tuning cycle. The auto tune function examines the direction of the offset of the PV from the SP. The auto tune function then takes control of the control output and induces a full-span step change in the opposite direction. Each time the sign of the error (SP – PV) changes, the output changes full-span in the opposite direction. This proceeds through three full cycles.

Closed Loop Auto Tune Cycle Wave: Limit Cycle Method

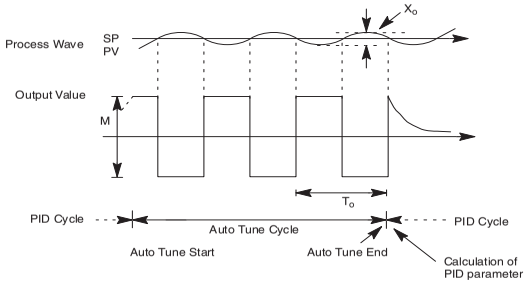

8

*Mmax = Output Value upper limit setting. Mmin = Output Value lower limit setting.

* This example is direct–acting.

When set to reverse–acting, the output will be inverted. When the loop tuning observations are complete, the loop controller computes To (bump period) and Xo (amplitude of the PV). Then it uses these values to compute Kpc (sensitive limit) and Tpc (period limit). From these values, the loop controller auto tune function computes the PID gains and the sample rate according to the Zeigler-Nichols equations shown below:

Kpc = 4M / (π *X0) Tpc = 0	
M = Amplitude of output	
PID Tuning	**PI Tuning**
P = 0.45*Kpc	P = 0.30*Kpc
I = 0.60*Tpc	I = 1.00*Tpc
D = 0.10*Tpc	D = 0
Sample Rate = 0.014*Tpc	Sample Rate = 0.03*Tpc

Auto tuning error

If the auto tune error bit (bit 13 of loop Mode/Alarm status word V+06) is on, please verify the PV and SP values are at least 5% of full scale difference, as required by the auto tune function.

NOTE: If your PV fluctuates rapidly, you probably need to use the built-in analog filter (see page 8–53) or create a filter in ladder logic (see example on page 8–54).

Use *Direct*SOFT 5 Data View with PID View

The **Data View** window is a very useful tool which can be used to help tune your PID loop. You can compare the variables in the **PID View** with the actual values in the V-memory location with Data View.

Open a New Data View Window

A new Data View window can be opened in any one of three ways; the menu bar **Debug > Data View > New**, the keyboard shortcut **Ctrl + Shift + F3** or the **Data** button on the Status toolbar. By default, the Data View window is assigned Data1 as the default name. This name can be changed for the current view using the Options dialog. The following diagram is an example of a newly opened Data View. The window will open next to the Ladder View by default.

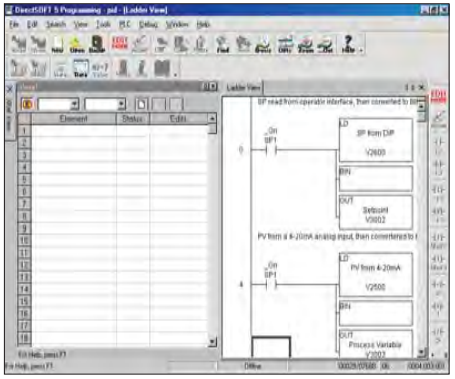

The Data View window can be used just as it is shown above for troubleshooting your PID logic, and it can be most useful when tuning the PID loop.

Open PID View

The PID View can only be opened after a loop has been setup in your ladder program and the programming computer is connected to the PLC (online). PID View is opened by selecting it from the View submenu on the Menu bar, **View > PID View**. The PID View can also be opened by clicking on the PID View button from the PLC Setup toolbar if it is in view.

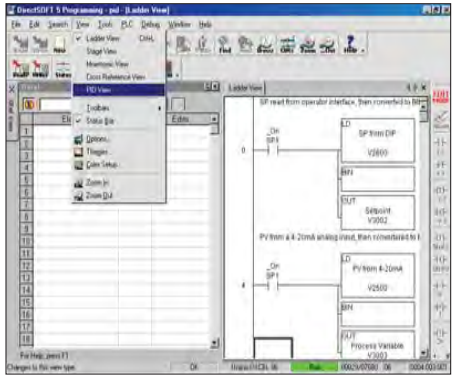

The PID View will open and appear over the Ladder View which can be brought into view by clicking on its tab. When using the Data View and the PID View together, each view can be sized for better use as shown on the facing page.

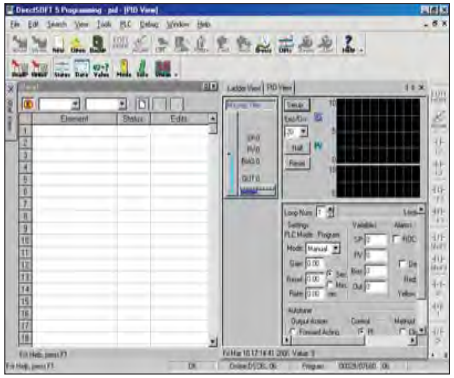

The two views are now ready to be used to tune your loop. You will be able to see where the PID values have been set and see the process that it is controlling.

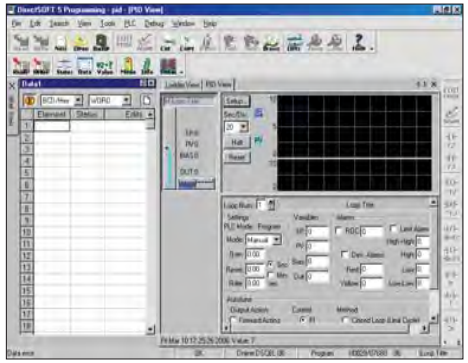

With both windows positioned in this manner, you are able to see where the PID values have been set and see the process that it is controlling. In the diagram below, you can see the current SP, PV and Output values, along with the other PID addresses. Refer to the Loop Table Word Definitions (page 8-20) for details for each word in the table. This is also a good data type reference for each word in the table.

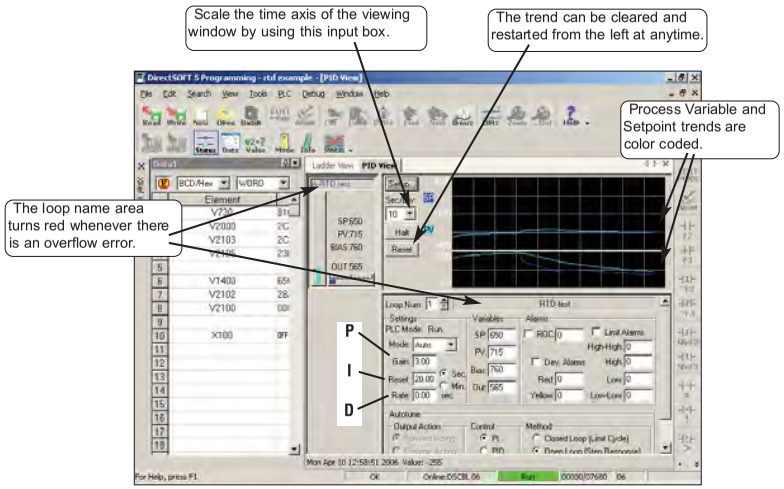

Using Other PID Features

It's a good idea to understand the special features of the DL05 and how to use them. You may want to incorporate some of these features for your PID.

How to Change Loop Modes

The first three bits of the PID Mode 1 word (V+00) request the operating mode of the corresponding loop. Note: These bits are mode change *requests*, not commands (certain conditions can prohibit a particular mode change – see next page).

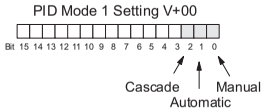

The normal state of these mode request bits is "000". To request a mode change, you must SET the corresponding bit to a "1", using a one-shot. The PID loop controller automatically resets the bits back to "000" after it reads the mode change request. Methods of requesting mode changes are:

- ***Direct***SOFT 5's **PID View** – this is the easiest method. Use the drop-down menu, or click on one of the radio buttons, and the appropriate bit will get set.
- **Ladder program**– ladder logic can request any loop mode when the PLC is in Run Mode. This will be necessary after application startup if mode changes are part of the application.

Use the rung shown to the right to SET the mode bit (do not use an OUT coil). On a 0–1 transition of X0, the rung sets the Auto bit equal to 1. The loop controller resets it.

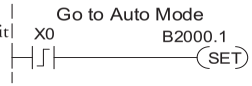

- **Operator panel** – interface the operator's panel to ladder logic using standard methods, then use the logic to the right to set the mode bit.

Since mode changes can only be *requested*, the PID loop controller will decide when to permit mode changes and provide the loop mode status. It reports the current mode on bits 0, 1, and 2 of the Loop Mode/Alarm Status word, location V+06 in the loop table. The parallel request/monitoring functions are shown in the figure below. The figure also shows the two possible mode-dependent SP sources, and the two possible Control Output sources.

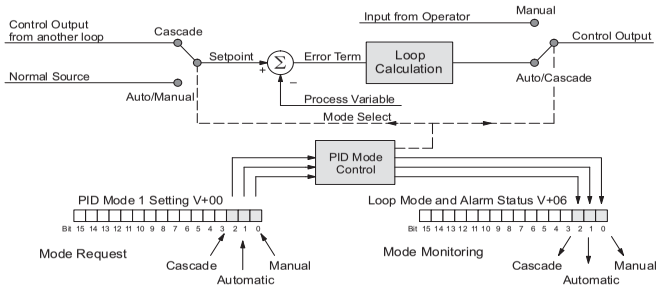

Operator Panel Control of PID Modes

Since the modes Manual, Auto and Cascade are the most fundamental and important PID loop controls, you may want to "hard-wire" mode control switches to an operator's panel. Most applications will need only Manual and Auto selections (Cascade is used in special applications). Remember that mode controls are really *mode request* bits, and the actual loop mode is indicated elsewhere.

The following figure shows an operator's panel using momentary push-buttons to request PID mode changes. The panel's mode indicators do not connect to the switches, but interface to the corresponding data locations.

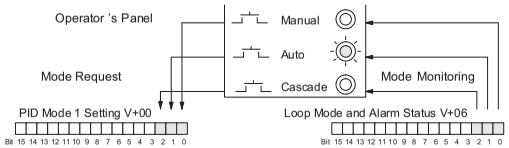

8

PLC Modes Effect on Loop Modes

If you have selected the option for the loops to follow the PLC mode, the PLC modes (Program, Run) interact with the loops as a group. The following summarizes this interaction:

- When the PLC is in Program Mode, all loops are placed in Manual Mode and no loop calculations occur. However, note that output modules (including analog outputs) turn off in PLC Program Mode. So, actual manual control is not possible when the PLC is in Program Mode.
- The only time the CPU will allow a loop mode change is during PLC Run Mode operation. As such, the CPU records the modes of all 4 loops as the desired mode of operation. If power failure and restoration occurs during PLC Run Mode, the CPU returns all loops to their prior mode (which could be Manual, Auto, or Cascade).
- On a Program-to-Run mode transition, the CPU forces each loop to return to its prior mode recorded during the last PLC Run Mode.
- You can add and configure new loops only when the PLC is in Program Mode. New loops automatically begin in Manual Mode.

Loop Mode Override

In normal conditions, the mode of a loop is determined by the request to V+00, bits 0, 1, and 2. However, some conditions exist which will prevent a requested mode change from occurring:

- A loop that is not set independent of PLC mode cannot change modes when the PLC is in Program mode.
- A major loop of a cascaded pair of loops cannot go from Manual to Auto until its minor loop is in Cascade mode.

In other situations, the PID loop controller will automatically change the mode of the loop to ensure safe operation:

- A loop which develops an error condition automatically goes to Manual.
- If the minor loop of a cascaded pair of loops leaves Cascade Mode for any reason, its major loop automatically goes to Manual Mode.

PV Analog Filter

A noisy PV signal can make tuning difficult and can cause the control output to be more extreme than necessary, as the output tries to respond to the peaks and valleys of the PV. There are two equivalent methods of filtering the PV input to make the loop more stable. The first method is accomplished using the DL05's built-in filter. The second method achieves a similar result using ladder logic.

The DL05 Built-in Analog Filter

The DL05 provides a selectable first-order low-pass PV input filter. **We only recommend the use of a filter during auto tuning or PID control if there is noise on the input signal.** You may disable the filter after auto tuning is complete, or continue to use it if the PV input signal is noisy.

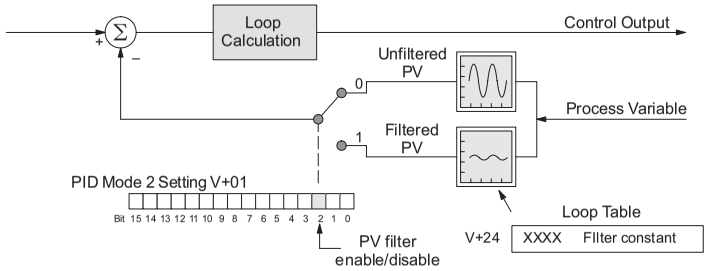

8

Bit 2 of PID Mode Setting 2 provides the enable/disable control for the low-pass PV filter (0=disable, 1=enable). The roll-off frequency of the single-pole low-pass filter is controlled by using register V+24 in the loop parameter table, the filter constant. The data format of the filter constant value is BCD, with an implied decimal point 00X.X, as follows:

- The filter constant has a valid range of 000.1 to 001.0.
- ***Direct***SOFT 5 converts values above the valid range to 001.0 and values below this range to 000.1
- Values close to 001.0 result in higher roll-off frequencies, while values closer to 000.1 result in lower roll-off frequencies.

We highly recommend using ***Direct***SOFT 5 for the auto tuning interface. The duration of each auto tuning cycle will depend on the mass of your process. A slowly-changing PV will result in a longer auto tune cycle time.

When the auto tuning is complete, the proportional and integral gain values are automatically updated in loop table locations V+10 and V+11 respectively. The derivative is calculated if you autotune for PID and updated in loop table location V+12. The sample time in V+07 is also updated automatically. You can test the validity of the values the auto tuning procedure yields by measuring the closed-loop response of the PV to a step change in the output. The instructions on how to do this are in the section on the manual tuning procedure.

The algorithm which the built-in filter follows is:

$$y_i = k\,(x_i - y_{i-1}) + y_{i-1}$$

y_i is the current output of the filter
x_i is the current input to the filter
y_{i-1} is the previous output of the filter
k is the PV Analog Input Filter Factor

Creating an Analog Filter in Ladder Logic

A similar algorithm can be built in your ladder program. Your analog inputs can be filtered effectively using either method. The following programming example describes the ladder logic you will need. Be sure to change the example memory locations to those that fit your application.

Filtering can induce a 1 part in 1000 error in your output because of "rounding." If your process cannot tolerate a 1 part in 1000 error, do not use filtering. Because of the rounding error, you should not use zero or full scale as alarm points. Additionally, the smaller the filter constant the greater the smoothing effect, but the slower the response time. Be sure a slower response is acceptable in controlling your process.

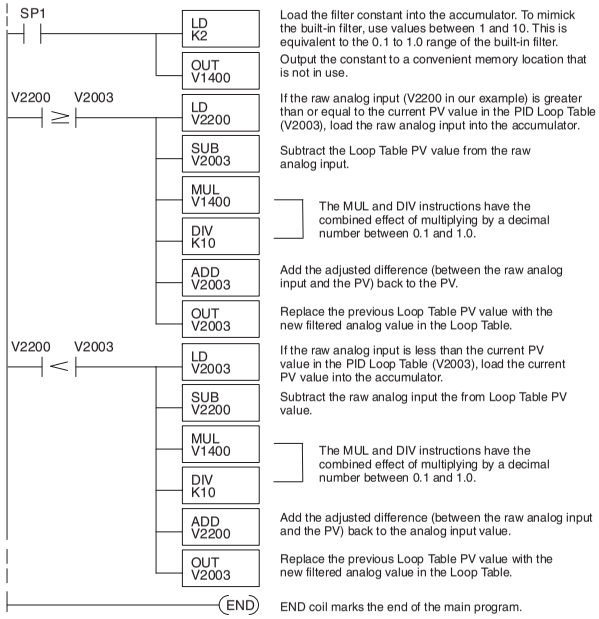

Use the *Direct*SOFT 5 Filter Intelligent Box Instruction

For those who are using *Direct*SOFT 5, you have the opportunity to use Intelligent Box (IBox) instruction IB-402, Filter Over Time in Binary (decimal). This IBox will perform a first-order filter on the Raw Data on a defined time interval. The equation is,

New = Old + [(Raw - Old)/FDC] where

New =New Filtered Value

Old = Old Filtered Value

FDC = Filter Divisor Constant

Raw = Raw Data

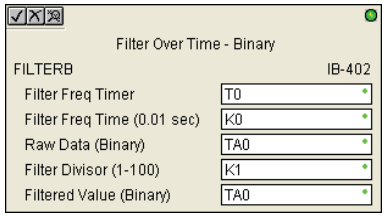

The Filter Divisor Constant is an integer in the range K1 to K100, such that if it equaled K1, then no filtering is performed.

The rate at which the calculation is performed is specified by time in hundredths of a second (0.01 seconds) as the Filter Freq Time parameter. Note that this Timer instruction is embedded in the IBox and must NOT be used any other place in your program. Power flow controls whether the calculation is enabled. If it is disabled, the Filter Value is not updated. On the first scan from Program to Run mode, the Filter Value is initialized to 0 to give the calculation a consistent starting point.

Since the following binary filter example does not write directly to the PID PV location, the BCD filter could be used with BCD values and then converted to BIN.

FilterB Example

Following is an example of how the FilterB IBox is used in a ladder program. The instruction is used to filter a binary value that is in V2000. Timer (T1) is set to 0.5 seconds, the rate at which the filter calculation will be performed. The filter constant is set to 3.0. A larger value will increase the smoothing effect of the filter. A value of 1 results with no filtering. The filtered value will be placed in V2100.

See Chapter 5, page 138, for more detailed information.

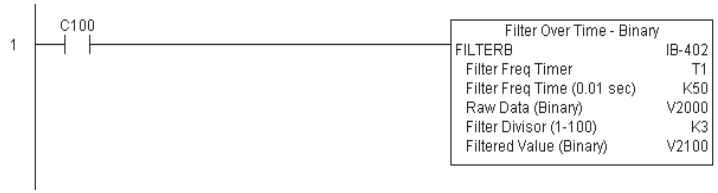

Ramp/Soak Generator

Introduction

Our discussion of basic loop operation noted the setpoint for a loop will be generated in various ways, depending on the loop operating mode and programming preferences. In the figure below, the ramp/soak generator is one of the ways the SP may be generated. It is the responsibility of your ladder program to ensure only one source attempts to write the SP value at V+02 at any particular time.

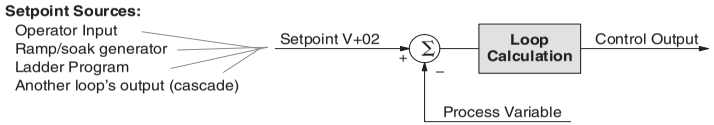

If the SP for your process rarely changes or can tolerate step changes, you probably will not need to use the ramp/soak generator. However, some processes require precisely-controlled SP value changes. *The ramp/soak generator can greatly reduce the amount of programming required for these applications.*

The terms "ramp" and "soak" have special meanings in the process control industry, and refer to desired setpoint (SP) values in temperature control applications. In the figure to the right, the setpoint increases during the ramp segment. It remains steady at one value during the soak segment.

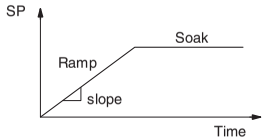

Complex SP profiles can be generated by specifying a series of ramp/soak segments. The ramp segments are specified in SP units per second. The soak time is also programmable in minutes.

It is instructive to view the ramp/soak generator as a dedicated function to generate SP values, as shown below. It has two categories of inputs which determine the SP values generated. The ramp/soak table must be programmed in advance, containing the values that will define the ramp/soak profile. The loop reads from the table during each PID calculation as necessary. The ramp/soak controls are bits in a special loop table word that control the real-time start/stop functionality of the ramp/soak generator. The ladder program can monitor the status of the ramp soak profile (current ramp/segment number).

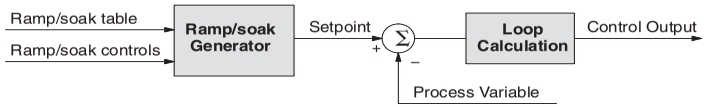

Now that we have described the general ramp/soak generator operation, we list its specific features:

- Each loop has its own ramp/soak generator (use is optional).
- You may specify up to eight ramp/soak steps (16 segments).
- The ramp soak generator can run anytime the PLC is in Run mode. Its operation is independent of the loop mode (Manual or Auto).
- Ramp/soak real-time controls include Start, Hold, Resume, and Jog.
- Ramp/soak monitoring includes Profile Complete, Soak Deviation (SP minus PV), and current ramp/soak step number.

The following figure shows a SP profile consisting of ramp/soak segment pairs. The segments are individually numbered as steps from 1 to 16. The slope of each of the ramp may be either increasing or decreasing. The ramp/soak generator automatically knows whether to increase or decrease the SP based on the relative values of a ramp's end points. These values come from the ramp/soak table.

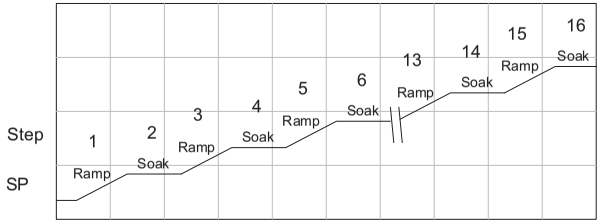

Ramp/Soak Table

The parameters which define the ramp/soak profile for a loop are in a ramp/soak table. Each loop may have its own ramp/soak table, but it is optional. Recall the Loop Parameter table consists a 32-word block of memory for each loop, and together they occupy one contiguous memory area. However, the ramp/soak table for a loop is individually located, because it is optional for each loop. An address pointer in location V+34 in the loop table specifies the starting location of the ramp/soak table.

In the example to the right, the loop parameter tables for Loop #1 and #2 occupy contiguous 32-word blocks as shown. Each has a pointer to its ramp/soak table, independently located elsewhere in user V-memory. Of course, you may locate all the tables in one group, as long as they do not overlap.

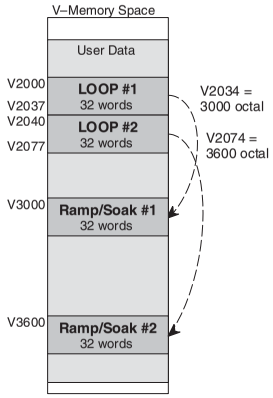

The parameters in the ramp/soak table must be user-defined. the most convenient way is to use *Direct*SOFT 5, which features a special editor for this table. Four parameters are required to define a ramp and soak segment pair, as pictured below.

- **Ramp End Value** – specifies the destination SP value for the end of the ramp. Use the same data format for this number as you use for the SP. It may be above or below the beginning SP value, so the slope could be up or down (we don't have to know the starting SP value for ramp #1).
- **Ramp Slope** – specifies the SP increase in counts (units) per second. It is a BCD number from 00.00 to 99.99 (uses implied decimal point).
- **Soak Duration** – specifies the time for the soak segment in minutes, ranging from 000.1 to 999.9 minutes in BCD (implied decimal point).
- **Soak PV Deviation** – (optional) specifies an allowable PV deviation above and below the SP value during the soak period. A PV deviation alarm status bit is generated by the ramp/soak generator.

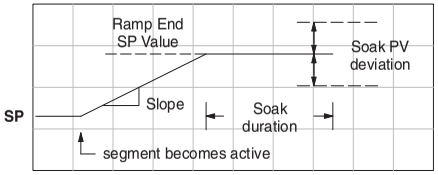

Ramp/Soak Table

V+00	XXXX	Ramp End SP Value
V+01	XXXX	Ramp Slope
V+02	XXXX	Soak Duration
V+03	XXXX	Soak PV Deviation

The ramp segment becomes active when the previous soak segment ends. If the ramp is the first segment, it becomes active when the ramp/soak generator is started, and automatically assumes the present SP as the starting SP.

Offset	Step	Description	Offset	Step	Description
+ 00	1	Ramp End SP Value	+ 20	9	Ramp End SP Value
+ 01	1	Ramp Slope	+ 21	9	Ramp Slope
+ 02	2	Soak Duration	+ 22	10	Soak Duration
+ 03	2	Soak PV Deviation	+ 23	10	Soak PV Deviation
+ 04	3	Ramp End SP Value	+ 24	11	Ramp End SP Value
+ 05	3	Ramp Slope	+ 25	11	Ramp Slope
+ 06	4	Soak Duration	+ 26	12	Soak Duration
+ 07	4	Soak PV Deviation	+ 27	12	Soak PV Deviation
+ 10	5	Ramp End SP Value	+ 30	13	Ramp End SP Value
+ 11	5	Ramp Slope	+ 31	13	Ramp Slope
+ 12	6	Soak Duration	+ 32	14	Soak Duration
+ 13	6	Soak PV Deviation	+ 33	14	Soak PV Deviation
+ 14	7	Ramp End SP Value	+ 34	15	Ramp End SP Value
+ 15	7	Ramp Slope	+ 35	15	Ramp Slope
+ 16	8	Soak Duration	+ 36	16	Soak Duration
+ 17	8	Soak PV Deviation	+ 37	16	Soak PV Deviation

Many applications do not require all 16 R/S steps. Use all zeros in the table for unused steps. The R/S generator ends the profile when it finds ramp slope = 0.

Ramp/Soak Table Flags

The individual bit definitions of the Ramp/Soak Table Flag (Addr+33) word is listed in the following table.

Bit	Ramp/Soak Flag Bit Description	Read/Write	Bit=0	Bit=1
0	Start Ramp / Soak Profile	write	–	01 Start
1	Hold Ramp / Soak Profile	write	–	01 Hold
2	Resume Ramp / soak Profile	write	–	01 Resume
3	Jog Ramp / Soak Profile	write	–	01 Jog
4	Ramp / Soak Profile Complete	read	–	Complete
5	PV Input Ramp / Soak Deviation	read	Off	On
6	Ramp / Soak Profile in Hold	read	Off	On
7	Reserved	read	Off	On
8–15	Current Step in R/S Profile	read	decode as byte (hex)	

Ramp/Soak Generator Enable

The main enable control to permit ramp/soak generation of the SP value is accomplished with bit 11 in the PID Mode 1 Setting V+00 word, as shown to the right. The other ramp/soak controls in V+33 shown in the table above will not operate unless this bit=1 during the entire ramp/soak process.

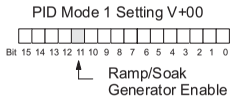

Ramp/Soak Controls

The four main controls for the ramp/soak generator are in bits 0 to 3 of the ramp/soak settings word in the loop parameter table. *Direct*SOFT 5 controls these bits directly from the ramp/soak settings dialog. However, you must use ladder logic to control these bits during program execution. We recommend using the bit-of-word instructions.

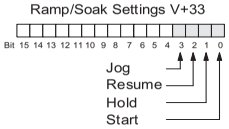

Ladder logic must set a control bit to a "1" to command the corresponding function. When the loop controller reads the ramp/soak value, it automatically turns off the bit for you. Therefore, a reset of the bit is not required when the CPU is in Run Mode.

The example program rung to the right shows how an external switch X0 can turn on and the PD contact uses the leading edge to set the proper control bit to start the ramp soak profile. This uses the Set Bit-of-word instruction.

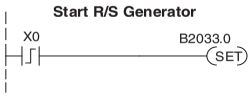

The normal state for the ramp/soak control bits is all zeros. Ladder logic must set only one control bit at a time.

- **Start** – a 0 to 1 transition will start the ramp soak profile. The CPU must be in Run Mode, and the loop can be in Manual or Auto Mode. If the profile is not interrupted by a Hold or Jog command, it finishes normally.
- **Hold** – a 0 to 1 transition will stop the ramp/soak profile in its current state, and the SP value will be frozen.
- **Resume** – a 0 to 1 transition cause the ramp/soak generator to resume operation if it is in the hold state. The SP values will resume from their previous value.
- **Jog** – a 0 to 1 transition will cause the ramp/soak generator to truncate the current segment (step), and go to the next segment.

Ramp/Soak Profile Monitoring

You can monitor the Ramp/Soak profile status using other bits in the Ramp/Soak Settings V+33 word, shown to the right.

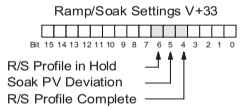

- R/S Profile Complete – =1 when the last programmed step is done.
- Soak PV Deviation – =1 when the error (SP–PV) exceeds the specified deviation in the R/S table.
- R/S Profile in Hold – =1 when the profile was active but is now in hold. Ramp/Soak Settings V+33

The number of the current step is available in the upper 8 bits of the Ramp/Soak Settings V+33 word. The bits represent a 2-digit hex number, ranging from 1 to 10. Ladder logic can monitor these to synchronize other parts of the program with the ramp/soak profile. Load this word to the accumulator and shift right 8 bits, and you have the step number.

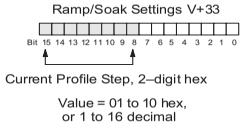

Ramp/Soak Programming Errors

The starting address for the ramp/soak table must be a valid location. If the address points outside the range of user V-memory, one of the bits to the right will turn on when the ramp/soak generator is started. We recommend using *Direct*SOFT 5 to configure the ramp/soak table. It automatically range checks the addresses for you.

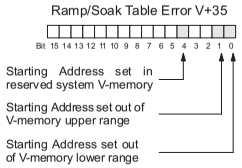

Testing Your Ramp/Soak Profile

It's a good idea to test your ramp/soak profile before using it to control the process. This is easy to do, because the ramp/soak generator will run even when the loop is in Manual Mode. Using *Direct*SOFT 5's PID View will be a real time-saver, because it will draw the profile on-screen for you. Be sure to set the trending timebase slow enough to display completed ramp-soak segment pairs in the waveform window.

*Direct*SOFT 5 Ramp/Soak Example

The following example will step you through the Ramp/Soak setup.

Setup the Profile in PID Setup

The first step is to use Setup PID in *Direct*SOFT 5 to set the profile of your process. Open the Setup PID window and select the R/S tab, and then enter the Ramp and Soak data.

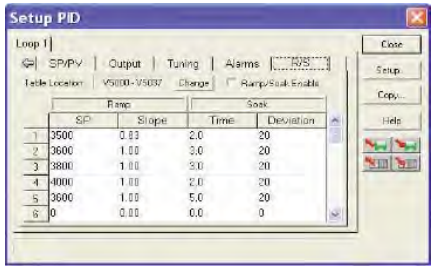

Program the Ramp/Soak Control in Relay Ladder

Refer to the Ramp/Soak Flag Bit Description table on page 8-59 when adding the control rungs to your program similar to the ladder rungs below. For the example below, PID parameters begin at V7000. The Ramp/Soak bit flags are located at V7033.

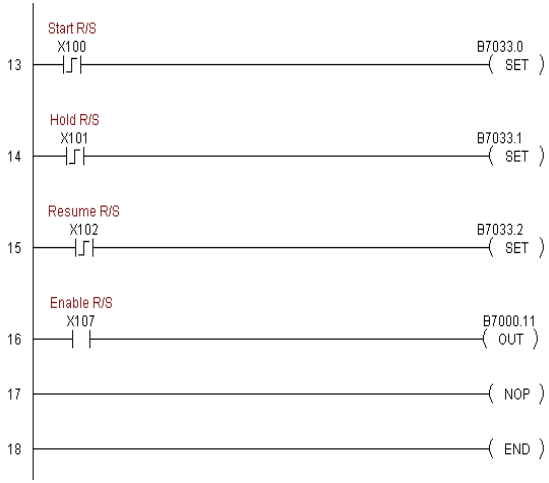

Test the Profile

After the Ramp/Soak program has been developed in RLL, test the program. Check your profile by using PID View. If there are any changes to be made in the profile, they are made in the PID Setup R/S profile. Make the chages in Program mode then start the Ramp/Soak process again.

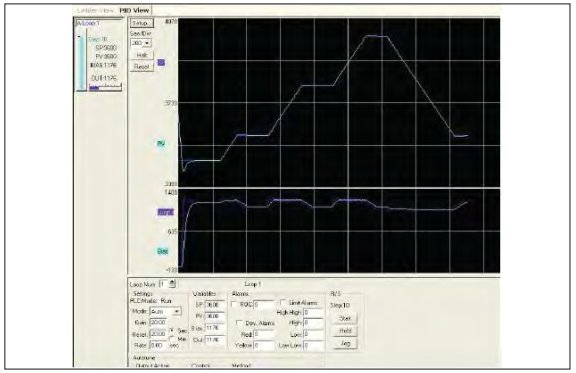

Cascade Control

Introduction

Cascaded loops are an advanced control technique that is superior to individual loop control in certain situations. As the name implies, cascade means that one loop is connected to another loop. In addition to Manual (open loop) and Auto (closed loop) Modes, the DL05 also provides Cascaded Mode.

NOTE: Cascaded loops are an advanced process control technique. Therefore we recommend their use only for experienced process control engineers.

When a manufacturing process is complex and contains a lag time from control input to process variable output, even the most perfectly tuned single loop around the process may yield slow and inaccurate control. It may be the actuator operates on one physical property, which eventually affects the process variable, measured by a different physical property. Identifying the intermediate variable allows us to divide the process into two parts as shown in the following figure.

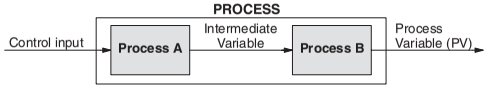

The principle of cascaded loops is simply that we add another process loop to more precisely control the intermediate variable! This separates the source of the control lag into two parts, as well.

The diagram below shows a cascade control system, showing that it is simply one loop nested inside another. The inside loop is called the minor loop, and the outside loop is called the major loop. For overall stability, the minor loop must be the fastest responding loop of the two (try a factor of 10 for a better response time). We do have to add the additional sensor to measure the intermediate variable (PV for process A). Notice the setpoint for the minor loop is automatically generated for us, by using the output of the major loop. Once the cascaded control is programmed and debugged, we only need to deal with the original setpoint and process variable at the system level. The cascaded loops behave as one loop, but with improved performance over the previous single-loop solution.

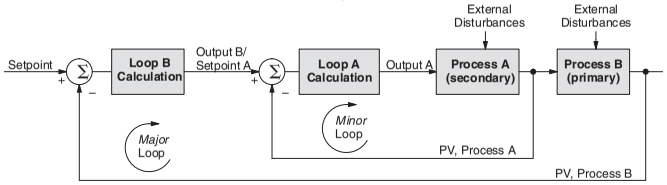

One of the benefits to cascade control can be seen by examining its response to external disturbances. Remember the minor loop is faster acting than the major loop. Therefore, if a disturbance affects process A in the minor loop, the Loop A PID calculation can correct the resulting error before the major loop sees the effect.

Cascaded Loops in the DL05 CPU

In the use of the term "cascaded loops", we must make an important distinction. Only the minor loop will actually be in the Cascade Mode. In normal operation, the major loop must be in Auto Mode. If you have more than two loops cascaded together, the outer-most (major) loop must be in Auto Mode during normal operation, and all inner loops in Cascade Mode.

NOTE: Technically, both major and minor loops are "cascaded" in strict process control terminology. Unfortunately, we are unable to retain this convention when controlling loop modes. Remember that all minor loops will be in Cascade Mode, and only the outer-most (major) loop will be in Auto Mode.

You can cascade together as many loops as necessary on the DL05, and you may have multiple groups of cascaded loops. For proper operation on cascaded loops you must use the same data range (12/15 bit) and unipolar/bipolar settings on the major and minor loop.

To prepare a loop for Cascade Mode operation as a minor loop, you must program its remote Setpoint Pointer in its loop parameter table location V+32, as shown below. The pointer must be the address of the V+05 location (control output) of the major loop. In Cascade Mode, the minor loop will ignore the its local SP register (V+02), and read the major loop's control output as its SP instead.

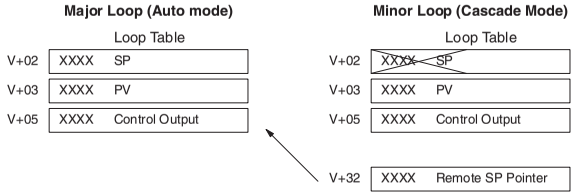

When using *Direct*SOFT 5's PID View to watch the SP value of the minor loop, *Direct*SOFT 5 automatically reads the major loop's control output and displays it for the minor loop's SP. The minor loop's normal SP location, V+02, remains unchanged.

Now, we use the loop parameter arrangement above and draw its equivalent loop schematic, shown below.

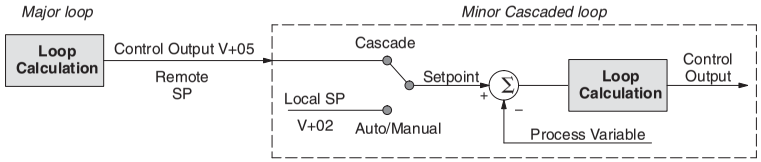

Remember that a major loop goes to Manual Mode automatically if its minor loop is taken out of Cascade Mode.

Tuning Cascaded Loops

When tuning cascaded loops, you will need to de-couple the cascade relationship and tune the minor loop using one of the loop tuning procedures previously covered. Once this has been done, have the minor loop in cascade mode and auto tune the major loop (see Step 4).

1. If you are not using auto tuning, then find the loop sample rate for the minor loop, using the method discussed earlier in this chapter. Then set the sample rate of the major loop slower than the minor loop by a factor of 10. Use this as a starting point.
2. Tune the minor loop first. Leave the major loop in Manual Mode, and you will need to generate SP changes for the minor loop manually as described in the loop tuning procedure.
3. Verify the minor loop gives a critically-damped response to a 10% SP change while in Auto Mode. Then we are finished tuning the minor loop.
4. In this step, you will need to get the minor loop in Cascade Mode, and then the Major loop in Auto Mode. We will be tuning the major loop with the minor loop treated as a series component its overall process. Therefore, do not go back and tune the minor loop again while tuning the major loop.
5. Tune the major loop, following the standard loop tuning procedure in this section. The response of the major loop PV is actually the overall response of the cascaded loops together.

Time-Proportioning Control

The PID loop controller in the DL05 CPU generates a smooth control output signal across a numerical range. The control output value is suitable to drive an analog output module, which connects to the process. In the process control field, this is called *continuous control*, because the output is on (at some level) continuously.

While continuous control can be smooth and robust, the cost of the loop components (such as actuator, heater amplifiers) can be expensive. A simpler form of control is called *time-proportioning control*. This method uses actuator which are either on or off (no in-between). Loop components for on/off-based control systems are lower cost than their continuous control counterparts.

In this section, we will show you how to convert the control output of a loop to time-proportioning control for the applications that need it. Let's take a moment to review how

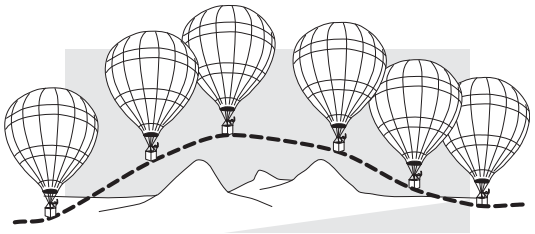

alternately turning a load on and off can control a process. The diagram below shows a hot-air balloon following a path across some mountains. The desired path is the *setpoint*. The balloon pilot turns the burner on and off alternately, which is his *control output*. The large mass of air in the balloon effectively averages the effect of the burner, converting the bursts of heat into a continuous effect, slowly changing balloon temperature and ultimately the altitude, which is the *process variable*.

Time-proportioning control approximates continuous control by virtue of its duty-cycle – the ratio of ON time to OFF time. The following figure shows an example of how duty-cycle approximates a continuous level when it is averaged by a large process mass.

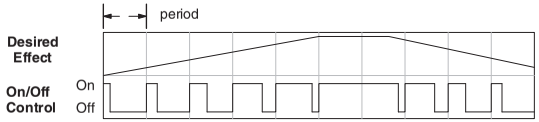

If we were to plot the on/off times of the burner in the hot-air balloon, we would probably see a very similar relationship to its effect on balloon temperature and altitude.

On/Off Control Program Example

The following ladder segment provides a time proportioned on/off control output. It converts the continuous output in V2005 to on/off control using the output coil, Y0.

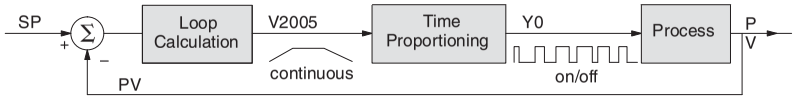

The example program uses two timers to generate On/Off control. It makes the following **assumptions**, which you can alter to fit your application:

- The loop table starts at V2000, so the control output is at V2005.
- The data format of the control output is 12-bit, unipolar (0 – FFF).
- The time base (one full cycle) for the On/Off waveform is 10 seconds. We use a fast timer (0.01 sec/tick), counting to 1000 ticks (10 seconds).
- The On/Off control output is Y0.

The time proportioning program must match the resolution of the PID output (1 part in 1000) to the resolution of the time base of T0 (also 1 part in 1000).

NOTE: Some processes change too fast for time proportioning control. Consider the speed of your process when you choose this control method. Use continuous control for processes that change too fast for time proportioning control. Also, consider using a solid state switch for a longer switch life instead of a relay.

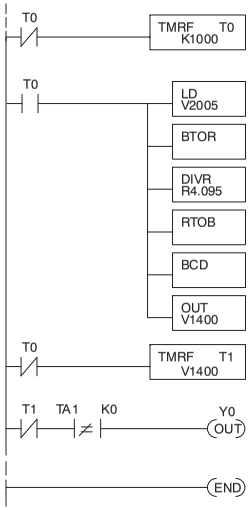

A fast timer (0.01 sec. timebase) establishes the primary time interval. The constant, K1000, sets the preset at 10 seconds (1,000 ticks). The N.C. enabling contact, T0, makes the timer self-resetting. T0 is on for one scan each 10 seconds, when it resets itself and T1.

At the end of the 10 second period, T0 turns on, and loads the control output value (binary) from the loop table V+05 location (V2005).

The BTOR instruction changes the number in the accumulator to a real number.

Dividing the control output by 4.095, converts the 0 – 4095 range to 0 – 1000, which "matchs" the preset time for TMRF T0.

This instruction converts the real number back to binary. This step prepares the number for conversion to BCD. There is no real-to-BCD instruction.

Convert the number in the accumulator to BCD format. This satisfies the timer preset format requirement.

Output the result to V1400. In our example, this is the location of the timer preset for the second timer.

The second fast timer also counts in increments of .01 seconds, so its range is variable from 0 to a maximum of 1000 ticks, or 10 seconds. This timer's output, T1, turns off the output coil, Y0, when the preset is reached.

The N.C. T1 contact, inverts the T1 timer output. The control output is on at the beginning of the 10-second time interval. Y0 turns off when T1 times out. The STRNE contact prevents Y0 from energizing during the one scan when T0 resets T1. Y0 is the actual control output.

END coil marks the end of the main program.

Feedforward Control

Feedforward control is an enhancement to standard closed-loop control. It is most useful for diminishing the effects of a *quantifiable and predictable* loop disturbance or sudden change in setpoint. Use of this feature is an option available to you on the DL05. However, it's best to implement and tune a loop without feedforward, and adding it only if better loop performance is still needed. The term "feed-forward" refers to the control technique involved, shown in the diagram below. The incoming setpoint value is fed forward around the PID equation, and summed with the output.

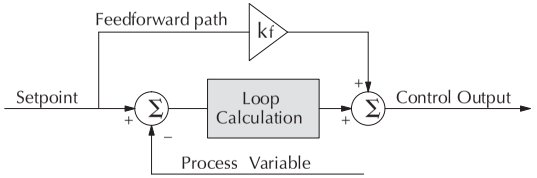

In the previous section on the bias term, we said that "the bias term value establishes a "working region" or operating point for the control output. *When the error fluctuates around its zero point, the output fluctuates around the bias value.*" Now, when there is a change in setpoint, an error is generated and the output must change to a new operating point. This also happens if a disturbance introduces a new offset in the loop. The loop does not really "know its way" to the new operating point... the integrator (bias) must increment/decrement until the error disappears, and then the bias has found the new operating point.

Suppose that we are able to know a sudden setpoint change is about to occur (common in some applications). We can avoid much of the resulting error in the first place, if we can quickly change the output to the new operating point. If we know (from previous testing) what the operating point (bias value) will be after the setpoint change, we can artificially change the output directly (which is feedforward). The benefits from using feedforward are:

- The SP–PV error is reduced during predictable setpoint changes or loop offset disturbances.
- Proper use of feedforward will allow us to reduce the integrator gain. Reducing integrator gain gives us an even more stable control system.

Feedforward is very easy to use in the DL05 loop controller, as shown below. The bias term has been made available to the user in a special read/write location, at PID Parameter Table location V+04.

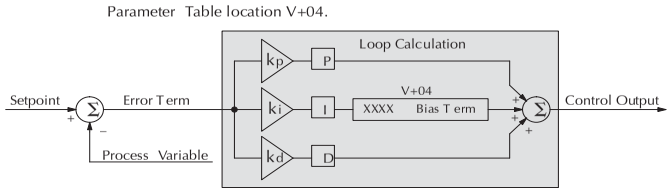

To change the bias (operating point), ladder logic only has to write the desired value to V+04. The PID loop calculation first reads the bias value from V+04 and modifies the value based on the current integrator calculation. Then it writes the result back to location V+04. This arrangement creates a sort of "transparent" bias term. All you have to do to implement feed forward control is write the correct value to the bias term at the right time (see the following example).

NOTE: When writing the bias term, one must be careful to design ladder logic to write the value only once, at the moment when the new bias operating point is to occur. If ladder logic writes the bias value on every scan, the loop's integrator is effectively disabled.

Feedforward Example

How do we know when to write to the bias term, and what value to write? Suppose we have an oven temperature control loop, and we have already tuned the loop for optimal performance. Refer to the figure below. We notice that when the operator opens the oven door, the temperature sags a bit while the loop bias adjusts to the heat loss. Then when the door closes, the temperature rises above the SP until the loop adjusts again. Feedforward control can help diminish this effect.

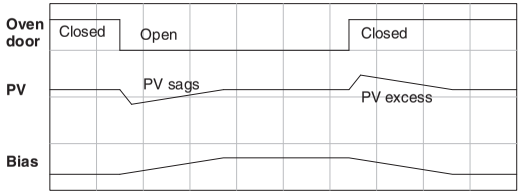

First, we record the amount of bias change the loop controller generates when the door opens or closes. Then, we write a ladder program to monitor the position of an oven door limit switch. When the door opens, our ladder program reads the current bias value from V+04, adds the desired change amount, and writes it back to V+04. When the door closes, we duplicate the procedure, but subtracting desired change amount instead. The following figure shows the results.

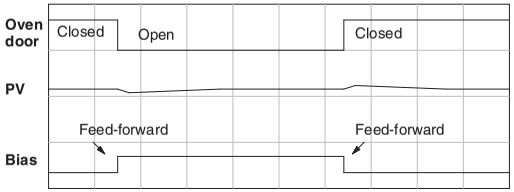

The step changes in the bias are the result of our two feed-forward writes to the bias term. We can see the PV variations are greatly reduced. The same technique may be applied for changes in setpoint.

PID Example Program

Program Setup for the PID Loop

After the PID loop, or loops, have been setup with *Direct*SOFT 5, you will need to edit your RLL program to include the rungs needed to setup the analog I/O module to be used by the PID loop(s).

The following example program shows how an analog combination module, F0-2AD2DA-2, is setup. This example assumes that the PID table for loop 1 has a beginning address of V2100.

All of the analog I/O modules used with the DL05 are setup in a similar manner. Refer to the DL05/DL06 Options Manual for the setup information for the particular module that you will be using.

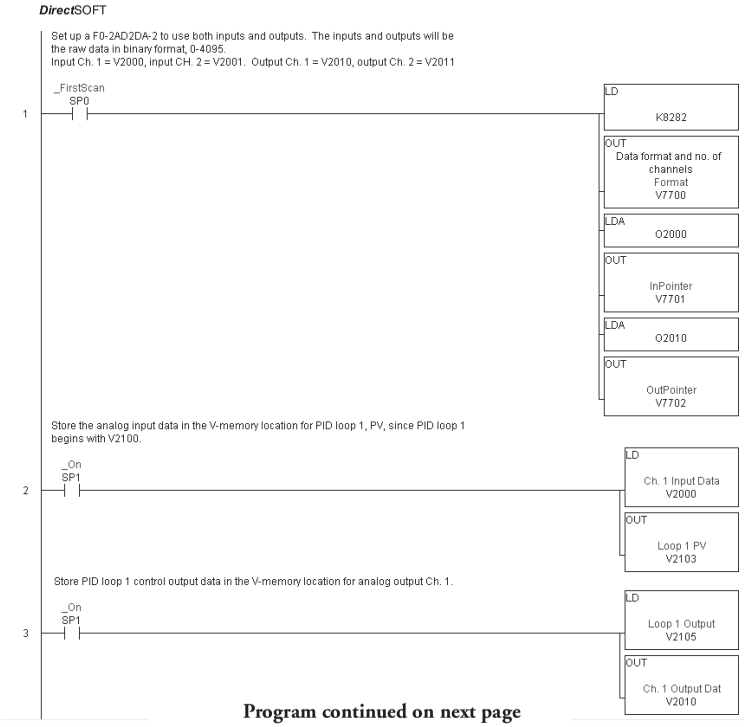

Program continued on next page

Example program continued

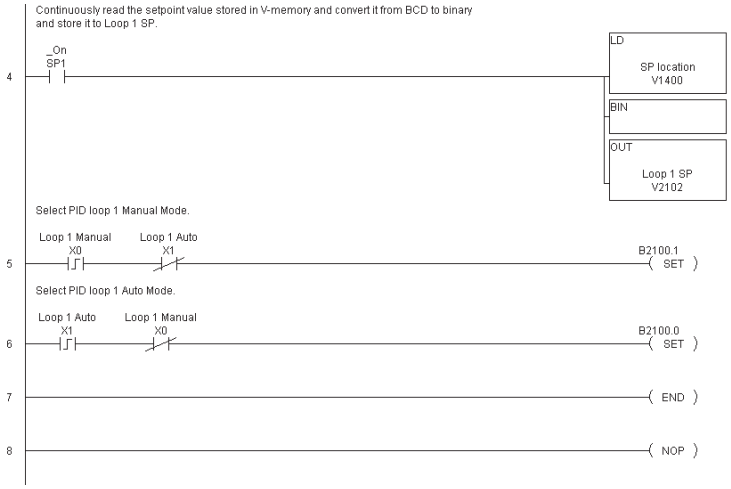

Note that the module used in this example was set up for binary format. It could have been setup for BCD format. In the later case, the BCD data would have to be converted to binary format before being stored to the setpoint and process variable, and the control output would have to be converted from binary to BCD before being stored to the analog output.

By following the steps outlined in this chapter, you should be able to setup workable PID control loops.

For a step-by-step tutorial, go to the Technical Support section located on our website, **www.automationdirect.com**. Once you are at the website, click on Technical Support Home. After this page opens, find and select **Technical and Application Notes** located under the **Using Your Products** column. When the Technical Notes page opens, select **General** then locate the document number, AN-MISC-012, titled "**PID tutorial - Powerpoint slide show**". This a Windows Power Point documentation. The Power Point Viewer can be downloaded from our website if you do not have Power Point to view the tutorial.

Troubleshooting Tips

Q. The loop will not go into Automatic Mode.

A. Check the following for possible causes:

- A PV alarm exists, or a PV alarm programming error exists.
- The loop is the major loop of a cascaded pair, and the minor loop is not in Cascade Mode.

Q. The Control Output stays at zero constantly when the loop is in Automatic Mode.

A. Check the following for possible causes:

- The Control Output upper limit in loop table location V+31 is zero.
- The loop is driven into saturation, because the error never goes to zero value and changes (algebraic) sign.

Q. The Control Output value is not zero, but it is incorrect.

A. Check the following for possible causes:

- The gain values are entered improperly. Remember, gains are entered in the loop table in BCD, while the SP and PV are in binary. If you are using *Direct*SOFT 5, PID View will display the SP, PV, Bias and Control output in decimal (BCD), converting it to binary before updating the loop table.

Q. The Ramp/Soak Generator does not operate when I activate the Start bit.

A. Check the following for possible causes:

- The Ramp/Soak enable bit is off. Check the status of bit 11 of loop parameter table location V+00. It must be set =1.
- The hold bit or other bits in the Ramp/Soak control are on.
- The beginning SP value and the first ramp ending SP value are the same, so first ramp segment has no slope and consequently has no duration. The ramp/soak generator moves quickly to the soak segment, giving the illusion the first ramp is not working.
- The loop is in Cascade Mode, and is trying to get the SP remotely.
- The SP upper limit value in the loop table location V+27 is too low.
- Check your ladder program to verify it is not writing to the SP location (V+02 in the loop table). A quick way to do this is to temporarily place an end coil at the beginning of your program, then go to PLC Run Mode, and manually start the ramp/soak generator.

Q. The PV value in the table is constant, even though the analog module receives the PV signal.

A. Your ladder program must read the analog value from the module successfully and write it into the loop table V+03 location. Verify the analog module is generating the value, and the ladder is working.

Q. The Derivative gain doesn't seem to have any affect on the output.

A. The derivative limit is probably enabled (see section on derivative gain limiting).

Q. The loop Setpoint appears to be changing by itself.

A. Check the following for possible causes:

- The Ramp/Soak generator is enabled, and is generating setpoints.
- If this symptom occurs on loop Manual-to-Auto Mode changes, the loop automatically sets the SP=PV if set to bumless transfer mode 1 (bumpless transfer feature).
- Check your ladder program to verify it is not writing to the SP location (V+02 in the loop table). A quick way to do this is to temporarily place an end coil at the beginning of your program, then go to PLC Run Mode.

Q. The SP and PV values I enter with *Direct*SOFT 5 work okay, but these values do not work properly when the ladder program writes the data.

A. The PID View in *Direct*SOFT 5 lets you enter SP, PV, and Bias values in decimal, and displays them in decimal for your convenience. For example, when the data format is 12 bit unipolar, the values range from 0 to 4095. However, the loop table actually requires these to be in hex, so *Direct*SOFT 5 converts them for you. Your ladder program must convert constant values from their BCD format (when entered as Kxxxx) to binary with the BIN instruction or you must enter them in the constant field (Kxxxx) as the hex equivalent of the decimal value.

Q. The loop seems unstable and impossible to tune, no matter what gains I use.

A. Check the following for possible causes:

- The loop sample time is set too long. Refer to the section near the front of this chapter on selecting the loop update time.
- The gains are too high. Start out by reducing the derivative gain to zero. Then reduce the integral gain by increasing the integral time value and the proportional gain if necessary.
- There is too much transfer lag in your process. This means the PV reacts sluggishly to control output changes. There may be too much "distance" between actuator and PV sensor, or the actuator may be weak in its ability to transfer energy into the process.
- There may be a process disturbance that is over-powering the loop. Make sure the PV is relatively steady when the SP is not changing.

Glossary of PID Loop Terminology

Automatic Mode An operational mode of a loop, in which it makes PID calculations and updates the loop's control output.

Bias Freeze A method of preserving the bias value (operating point) for a control output, by inhibiting the integrator when the output goes out-of-range. The benefit is a faster loop recovery.

Bias Term In the position form of the PID equation, it is the sum of the integrator and the initial control output value.

Bumpless Transfer A method of changing the operation mode of a loop while avoiding the usual sudden change in control output level. This consequence is avoided by artificially making the SP and PV equal, or the bias term and control output equal at the moment of mode change.

Cascaded Loops A cascaded loop receives its setpoint from the output of another loop. Cascaded loops have a major/minor relationship, and work together to ultimately control one PV.

Cascade Mode An operational mode of a loop, in which it receives its SP from another loop's output.

Continuous Control Control of a process done by delivering a smooth (analog) signal as the control output.

Control Output The numerical result of a PID equation which is sent by the loop with the intention of nulling out the current error.

Derivative Gain A constant that determines the magnitude of the PID derivative term in response to the current error.

Direct-Acting Loop A loop in which the PV increases in response to a control output increase. In other words, the process has a positive gain.

Error The difference in value between the SP and PV, Error = SP – PV.

Error Deadband An optional feature which makes the loop insensitive to errors when they are small. You can specify the size of the deadband.

Error Squared An optional feature which multiplies the error by itself, but retains the original algebraic sign. It reduces the effect of small errors, while magnifying the effect of large errors.

Feedforward A method of optimizing the control response of a loop when a change in setpoint or disturbance offset is known and has a quantifiable effect on the bias term.

Integral Gain A constant that determines the magnitude of the PID integral term in response to the current error.

Major Loop In cascade control, it is the loop that generates a setpoint for the cascaded loop.

Manual Mode An operational mode of a loop, it which the PID calculations are stopped. The operator must manually control the loop by writing to the control output value directly.

Minor Loop In cascade control, the minor loop is the subordinate loop that receives its SP from the major loop.

On/Off Control A simple method of controlling a process, through on/off application of energy into the system. The mass of the process averages the on/off effect for a relatively smooth PV. A simple ladder program can convert the DL05's continuous loop output to on/off control.

PID Loop A mathematical method of closed-loop control involving the sum of three terms based on proportional, integral, and derivative error values. The three terms have independent gain constants, allowing one to optimize (tune) the loop for a particular physical system.

Position Algorithm The control output is calculated so it responds to the displacement (position) of the PV from the SP (error term).

Process A manufacturing procedure which adds value to raw materials. Process control particularly refers to inducing chemical changes to the material in process.

Process Variable (PV) A quantitative measurement of a physical property of the material in process, which affects final product quality and is important to monitor and control.

Proportional Gain A constant that determines the magnitude of the PID proportional term in response to the current error.

PV Absolute Alarm A programmable alarm that compares the PV value to alarm threshold values.

PV Deviation Alarm A programmable alarm that compares the difference between the SP and PV values to a deviation threshold value.

Ramp/Soak Profile A set of SP values called a profile, which is generated in real time upon each loop calculation. The profile consists of a series of ramp and soak segment pairs, greatly simplifying the task of programming the PLC to generate such SP sequences.

Rate Also called differentiator, the rate term responds to the changes in the error term.

Remote Setpoint The location where a loop reads its setpoint when it is configured as the minor loop in a cascaded loop topology.

Reset Also called integrator, the reset term adds each sampled error to the previous, maintaining a running total called the bias.

Reset Windup A condition created when the loop is unable to find equilibrium, and the persistent error causes the integrator (reset) sum to grow excessively (windup). Reset windup causes an extra recovery delay when the original loop fault is remedied.

Reverse-Acting Loop A loop in which the PV increases in response to a control output decrease. In other words, the process has a negative gain.

Sampling time The time between PID calculations. The CPU method of process control is called a sampling controller, because it samples the SP and PV only periodically.

Setpoint (SP) The desired value for the process variable. The setpoint (SP) is the input command to the loop controller during closed loop operation.

Soak Deviation The soak deviation is a measure of the difference between the SP and PV during a soak segment of the Ramp/Soak profile, when the Ramp/Soak generator is active.

Step Response The behavior of the process variable in response to a step change in the SP (in closed loop operation), or a step change in the control output (in open loop operation).

Transfer To change from one loop operational mode to another (between Manual, Auto, or Cascade). The word "transfer" probably refers to the transfer of control of the control output or the SP, depending on the particular mode change.

Velocity Algorithm The control output is calculated to represent the rate of change (velocity) for the PV to become equal to the SP.

Bibliography

Fundamentals of Process Control Theory, Second Edition Author: Paul W. Murrill Publisher: Instrument Society of America ISBN 1–55617–297–4	Application Concepts of Process Control Author: Paul W. Murrill Publisher: Instrument Society of America ISBN 1–55617–080–7
PID Controllers: Theory, Design, and Tuning, 2nd Edition Author: K. Astrom and T Hagglund Publisher: Instrument Society of America ISBN 1–55617–516–7	Fundamentals of Temperature, Pressure, and Flow Measurements, Third edition Author: Robert P. Benedict Publisher: John Wiley and Sons ISBN 0–471–89383–8
Process / Industrial Instruments & Controls Handbook, Fourth Edition Author (Editor-in-Chief): Douglas M. Considine Publisher: McGraw-Hill, Inc ISBN 0-07-012445-0	pH Measurement and Control, Second Edition Author: Gregory K. McMillan Publisher: Instrument Society of America ISBN 1–55617–483–7
Programmable Controllers Concepts and Applications, First Edition Authors: C.T. Jones and L.A. Bryan Publisher: International Programmable Controls ISBN 0-915425-00-9	Fundamentals of Programmable Logic Controllers, Sensors, and Communications Author: Jon Stenerson Publisher: Prentice Hall ISBN 0-13-726860-2
Process Control, Third Edition Instrument Engineer's Handbook Author (Editor-in-Chief): Bela G. Liptak Publisher: Chilton. . . . . ISBN 0–8019–8242–1	Process Measurement and Analysis, Third Edition Instrument Engineer's Handbook Author (Editor-in-Chief): Bela G. Liptak Publisher: Chilton. . . . . ISBN 0–8019–8197–2

Maintenance and Troubleshooting

Chapter 9

In This Chapter:

Hardware System Maintenance 9–2
Diagnostics 9–2
CPU Indicators 9–6
Communications Problems 9–7
I/O Point Troubleshooting 9–8
Noise Troubleshooting 9–10
Machine Startup and Program Troubleshooting 9–11

Hardware System Maintenance

Standard Maintenance

No regular or preventative maintenance is required for this product (there are no internal batteries); however, a routine maintenance check (about every one or two months) of your PLC and control system is good practice, and should include the following items:

- Air Temperature – Check the air temperature in the control cabinet, so the operating temperature range of any component is not exceeded.
- Air Filter – If the control cabinet has an air filter, clean or replace it periodically as required.
- Fuses or breakers – Verify that all fuses and breakers are intact.
- Cleaning the Unit – Check that all air vents are clear. If the exterior case needs cleaning, disconnect the input power, and carefully wipe the case using a damp cloth. Do not let water enter the case through the air vents and do not use strong detergents because this may discolor the case.

Diagnostics

Diagnostics

Your DL05 Micro PLC performs many pre-defined diagnostic routines with every CPU scan. The diagnostics can detect various errors or failures in the PLC. The two primary error classes are fatal and non-fatal.

Fatal Errors

Fatal errors are errors which may cause the system to function improperly, perhaps introducing a safety problem. The CPU will automatically switch to Program Mode if it is in Run Mode. (Remember, in Program Mode all outputs are turned off.) If the fatal error is detected while the CPU is in Program Mode, the CPU will not allow you to transition to Run Mode until the error has been corrected.

Some examples of fatal errors are:

- Power supply failure
- Parity error or CPU malfunction
- Particular programming errors

Non-fatal Errors

Non-fatal errors are errors that need your attention, but should not cause improper operation. They do not cause or prevent any mode transitions of the CPU. The application program can use special relay contacts to detect non-fatal errors, and even take the system to an orderly shutdown or switch the CPU to Program Mode if desired. An example of a non-fatal error is:

- Particular programming errors The programming devices will notify you of an error if one occurs while online.
- *Direct*SOFT 5 provides the error number and an error message.
- The handheld programmer displays error numbers and short descriptions of the error.

Appendix B has a complete list of error messages in order by error number. Many error messages point to supplemental V-memory locations which contain related information. Special relays (SP contacts) also provide error indications.

V-memory Error Code Locations

The following table names the specific memory locations that correspond to certain types of error messages.

Error Class	Error Category	Diagnostic V-memory
User-Defined	Error code used with FAULT instruction	V7751
System Error	Fatal Error code	V7755
	Major Error code	V7756
	Minor Error code	V7757
Grammatical	Address where syntax error occurs	V7763
	Error Code found during syntax check	V7764
CPU Scan	Number of scans since last Program to Run Mode transition	V7765
	Current scan time (ms)	V7775
	Minimum scan time (ms)	V7776
	Maximum scan time (ms)	V7777

Special Relays (SP) Corresponding to Error Codes

The special relay table also includes status indicators which can indicate errors. For a more detailed description of each of these special relays refer to Appendix D.

CPU Status Relays	
SP11	Forced Run mode
SP12	Terminal Run mode
SP13	Test Run mode
SP15	Test stop mode
SP16	Terminal Program mode
SP17	Forced stop
SP20	STOP instruction was executed
SP22	Interrupt enabled
System Monitoring Relays	
SP36	Override setup
SP37	Scan control error
SP40	Critical error
SP41	Non-critical error
SP42	Diagnostics error
SP44	Program memory error
SP45	I/O error
SP46	Communications error
SP50	Fault instruction was executed
SP51	Watchdog timeout
SP52	Syntax error
SP53	Cannot solve the logic
SP54	Communication error
SP56	Table instruction overrun

Accumulator Status Relays	
SP60	Acc. is less than value
SP61	Acc. is equal to value
SP62	Acc. is greater than value
SP63	Acc. result is zero
SP64	Half borrow occurred
SP65	Borrow occurred
SP66	Half carry occurred
SP67	Carry occurred
SP70	Result is negative (sign)
SP71	Pointer reference error
SP73	Overflow
SP75	Data is not in BCD
SP76	Load zero

DL05 Micro PLC Error Codes

These errors can be generated by the CPU or by the Handheld Programmer, depending on the actual error. Appendix B provides a more complete description of the error codes.

The errors can be detected at various times. However, most of them are detected at power-up, on entry to Run Mode, or when a Handheld Programmer key sequence results in an error or an illegal request.

Error Code	Description
E003	Software time-out
E004	Invalid instruction(RAM parity error in the CPU)
E104	Write failed
E151	Invalid command
E311	Communications error 1
E312	Communications error 2
E313	Communications error 3
E316	Communications error 6
E320	Time out
E321	Communications error
E360	HP Peripheral port time-out
E501	Bad entry
E502	Bad address
E503	Bad command
E504	Bad reference / value
E505	Invalid instruction
E506	Invalid operation
E520	Bad operation – CPU in Run
E521	Bad operation – CPU in Test Run
E523	Bad operation – CPU in Test Program
E524	Bad operation – CPU in Program
E525	Mode Switch not in Term position

Error Code	Description
E526	Unit is offline
E527	Unit is online
E528	CPU mode
E540	CPU locked
E541	Wrong password
E542	Password reset
E601	Memory full
E602	Instruction missing
E604	Reference missing
E620	Out of memory
E621	EEPROM Memory not blank
E622	No Handheld Programmer EEPROM
E624	V-memory only
E625	Program only
E627	Bad write operation
E628	Memory type error (should be EEPROM)
E640	Mis-compare
E650	Handheld Programmer system error
E651	Handheld Programmer ROM error
E652	Handheld Programmer RAM error

Program Error Codes

The following table lists program syntax and runtime error codes. Error detection occurs during a Program-to-Run mode transition, or when you use AUX 21 – Check Program. The CPU will also turn on SP52 and store the error code in V7755. Appendix B provides a more complete description of the error codes.

Error Code	Description
E4**	No Program in CPU
E401	Missing END statement
E402	Missing LBL
E403	Missing RET
E404	Missing FOR
E405	Missing NEXT
E406	Missing IRT
E412	SBR / LBL >64
E421	Duplicate stage reference
E422	Duplicate SBR/LBL reference
E423	HP Peripheral port time-out
E431	Invalid ISG/SG address
E433	Invalid ISG / SG address
E434	Invalid RTC
E435	Invalid RT
E436	Invalid INT address
E437	Invalid IRTC

Error Code	Description
E438	Invalid IRT address
E440	Invalid Data Address
E441	ACON/NCON
E451	Bad MLS/MLR
E453	Missing T/C
E454	Bad TMRA
E455	Bad CNT
E456	Bad SR
E461	Stack Overflow
E462	Stack Underflow
E463	Logic Error
E464	Missing Circuit
E471	Duplicate coil reference
E472	Duplicate TMR reference
E473	Duplicate CNT reference
E499	Print instruction

CPU Indicators

The DL05 Micro PLCs have indicators on the front to help you determine potential problems with the system. In normal runtime operation only, the RUN and PWR indicators are on. The table below is a quick reference to potential problems.

Indicator Status	Potential Problems
PWR (LED off)	1. System voltage incorrect
	2. PLC power supply faulty
RUN (LED off)	1. CPU programming error
	2. CPU in program mode
RUN (LED blinking)	A firmware upgrade is needed
CPU (LED on)	1. Electrical noise interference
	2. Internal CPU defective

PWR Indicator

In general there are three reasons for the CPU power status LED (PWR) to be OFF:

1. Power to the unit is incorrect or is not applied.
2. PLC power supply is faulty.
3. Other component(s) have the power supply shut down.

If the voltage to the power supply is not correct, the PLC may not operate properly or may not operate at all. Use the following guidelines to correct the problem.

WARNING: To minimize the risk of electrical shock, always disconnect the system power before inspecting the physical wiring.

1. First, disconnect the external power.
2. Verify that all external circuit breakers or fuses are still intact.
3. Check all incoming wiring for loose connections. If you're using a separate termination block, check those connections for accuracy and integrity.
4. If the connections are acceptable, reconnect the system power and verify the voltage at the DL05 power input is within specification. If the voltage is not correct shut down the system and correct the problem.
5. If all wiring is connected correctly and the incoming power is within the specifications, the PLC internal supply may be faulty.

The best way to check for a faulty PLC is to substitute a known good one to see if this corrects the problem. The removable connectors on the DL05 make this relatively easy. If there has been a major power surge, it is possible the PLC internal power supply has been damaged. If you suspect this is the cause of the power supply damage, consider installing an AC line conditioner to attenuate damaging voltage spikes in the future.

NOTE: See Chapter 2 for suppressing the DL05 outputs.

RUN Indicator

If the CPU will not enter the Run mode (the RUN indicator is off), the problem is usually in the application program, unless the CPU has a fatal error. If a fatal error has occurred, the CPU LED should be on. You can use a programming device to determine the cause of the error.

The RUN indicator is blinking: the PLC firmware needs to be upgraded.

Both of the programming devices, Handheld Programmer and *Direct*SOFT 5, will return an error message describing the problem. Depending on the error, there may also be an AUX function you can use to help diagnose the problem. The most common programming error is "Missing END Statement". All application programs require an END statement for proper termination. A complete list of error codes can be found in Appendix B.

CPU Indicator

If the CPU indicator is on, a fatal error has occurred in the CPU. Generally, this is not a programming problem but an actual hardware failure. You can power cycle the system to clear the error. If the error clears, you should monitor the system and determine what caused the problem. You will find this problem is sometimes caused by high frequency electrical noise introduced into the CPU from an outside source. Check your system grounding and install electrical noise filters if the grounding is suspected. If power cycling the system does not reset the error, or if the problem returns, you should replace the CPU.

Communications Problems

If you cannot establish communications with the CPU, check for these problems:

- The cable is disconnected.
- The cable has a broken wire or has been wired incorrectly.
- The cable is improperly terminated or grounded.
- The device connected is not operating at the correct baud rate (9600 baud).
- The device connected to the port is sending data incorrectly.
- A grounding difference exists between the two devices.
- Electrical noise is causing intermittent errors.
- The PLC has a bad communication port and should be replaced.

For problems in communicating with *Direct*SOFT 5 on a personal computer, refer to the *Direct*SOFT 5 manual. It includes a troubleshooting section that can help you diagnose PC problems in communications port setup, address or interrupt conflicts, etc.

I/O Point Troubleshooting

Possible Causes

If you suspect an I/O error, there are several things that could be causing the problem.

- High-Speed I/O configuration error
- A blown fuse in your machine or panel (the DL05 does not have internal I/O fuses)
- A loose terminal block
- The auxiliary 24 VDC supply has failed
- The Input or Output Circuit has failed

Some Quick Steps

When troubleshooting the DL05 Micro PLCs there are a few facts you should be aware of. These facts may assist you in quickly correcting an I/O problem.

- HSIO configuration errors are commonly mistaken for I/O point failure during program development. If the I/O point in question is in X0–X2, or Y0–Y1, check all parameter locations listed in Chapter 3 that apply to the HSIO mode you have selected.
- The output circuits cannot detect shorted or open output points. If you suspect one or more faulty points, measure the voltage drop from the common to the suspect point. Remember when using a Digital Volt Meter, leakage current from an output device such as a triac or a transistor must be considered. A point which is off may appear to be on if no load is connected the point.
- The I/O point status indicators are logic-side indicators. This means the LED which indicates the on or off status reflects the status of the point with respect to the CPU. On an output point the status indicators could be operating normally while the actual output device (transistor, triac etc.) could be damaged. With an input point, if the indicator LED is on the input circuitry is probably operating properly. Verify the LED goes off when the input signal is removed.
- Leakage current can be a problem when connecting field devices to an I/O point. False input signals can be generated when the leakage current of an output device is great enough to turn on the connected input device. To correct this, install a resistor in parallel with the input or output of the circuit. The value of this resistor will depend on the amount of leakage current and the voltage applied but usually a 10K to 20K resistor will work. Verify the wattage rating of the resistor is correct for your application.
- Because of the removable terminal blocks on the DL05, the easiest method to determine if an I/O circuit has failed is to replace the unit if you have a spare. However, if you suspect a field device is defective, that device may cause the same failure in the replacement PLC as well. As a point of caution, you may want to check devices or power supplies connected to the failed I/O circuit before replacing the unit with a spare.

Output points can be set on or off in the DL05 series CPUs. If you want to do an I/O check out independent of the application program, follow the procedure below:

Step	Action
1	Use a handheld programmer or ***Direct***SOFT to communicate online to the PLC.
2	Change to Program Mode.
3	Go to address 0.
4	Insert an "END" statement at address 0. (This will cause program execution to occur only at address 0 and prevent the application program from turning the I/O points on or off).
5	Change to Run Mode.
6	Use the programming device to set (turn) on or off the points you wish to test.
7	When you finish testing I/O points delete the "END" statement at address 0.

WARNING: Depending on your application, forcing I/O points may cause unpredictable machine operation that can result in a risk of personal injury or equipment damage. Make sure you have taken all appropriate safety precautions prior to testing any I/O points.

Handheld Programmer Keystrokes Used to Test an Output Point

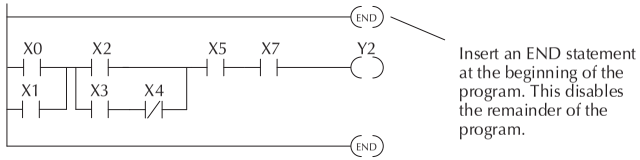

From a clear display, use the following keystrokes

Use the PREV or NEXT keys to select the Y data type

Use arrow keys to select point, then use ON and OFF to change the status

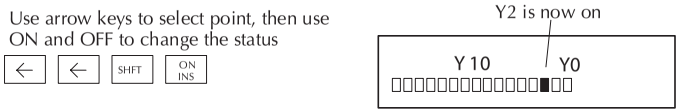

Noise Troubleshooting

Electrical Noise Problems

Noise is one of the most difficult problems to diagnose. Electrical noise can enter a system in many different ways and they fall into one of two categories, conducted or radiated. It may be difficult to determine how the noise is entering the system but the corrective actions for either of the types of noise problems are similar.

- Conducted noise is when the electrical interference is introduced into the system by way of a attached wire, panel connection ,etc. It may enter through an I/O circuit, a power supply connection, the communication ground connection, or the chassis ground connection.
- Radiated noise is when the electrical interference is introduced into the system without a direct electrical connection, much in the same manner as radio waves.

Reducing Electrical Noise

While electrical noise cannot be eliminated, it can be reduced to a level that will not affect the system.

- Most noise problems result from improper grounding of the system. A good earth ground can be the single most effective way to correct noise problems. If a ground is not available, install a ground rod as close to the system as possible. Ensure all ground wires are single point grounds and are not daisy chained from one device to another. Ground metal enclosures around the system. A loose wire can act as a large antenna, introducing noise into the system. Therefore, tighten all connections in your system. Loose ground wires are more susceptible to noise than the other wires in your system. Review Chapter 2 Installation, Wiring, and Specifications if you have questions regarding how to ground your system.
- Electrical noise can enter the system through the power source for the PLC and I/O circuits. Installing an isolation transformer for all AC sources can correct this problem. DC sources should be well-grounded good quality supplies.
- Separate input wiring from output wiring. Never run low-voltage I/O wiring close to high voltage wiring.

Machine Startup and Program Troubleshooting

The DL05 Micro PLCs provide several features that can help you debug your program before and during machine startup. This section discusses the following topics which can be very helpful.

- Program Syntax Check
- Duplicate Reference Check
- Special Instructions
- Run Time Edits
- Forcing I/O Points

Syntax Check

Even though the Handheld Programmer and *Direct*SOFT 5 provide error checking during program entry, you may want to check a program that has been modified. Both programming devices offer a way to check the program syntax. For example, you can use AUX 21, CHECK PROGRAM to check the program syntax from a Handheld Programmer, or you can use the PLC Diagnostics menu option within *Direct*SOFT 5. This check will find a wide variety of programming errors. The following example shows how to use the syntax check with a Handheld Programmer.

Use AUX 21 to perform syntax check

CLR | C 2 | B 1 | AUX | ENT

```
AUX 21 CHECK PRO
1:SYN 2:DUP REF
```

Select syntax check (default selection)

ENT (You may not get the busy display if the program is not very long.)

```
BUSY
```

One of two displays will appear

Error Display (example)

```
$00050 E401
MISSING END
```

(shows location in question)

Syntax OK display

```
NO SYNTAX ERROR
?
```

See the Error Codes Section for a complete listing of programming error codes. If you get an error, just press CLR and the Handheld will display the instruction where the error occurred. Correct the problem and continue running the Syntax check until the NO SYNTAX ERROR message appears.

Special Instructions

There are several instructions that can be used to help you debug your program during machine startup operations.

- END
- PAUSE
- STOP

END Instruction: If you need a way to quickly disable part of the program, just insert an END statement prior to the portion that should be disabled. When the CPU encounters the END statement, it assumes that is the end of the program. The following diagram shows an example.

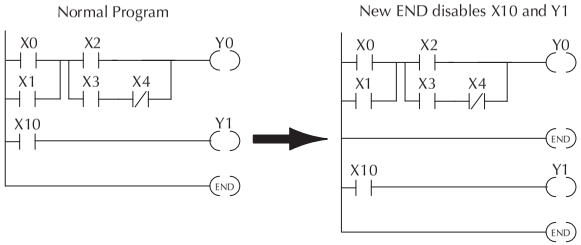

PAUSE Instruction: This instruction provides a quick way to allow the inputs (or other logic) to operate while disabling selected outputs. The output image register is still updated, but the output circuits are not. For example, you could make this conditional by adding an input contact or CR to control the instruction with a switch or a programming device. Or, you could just add the instruction without any conditions so the selected outputs would be disabled at all times.

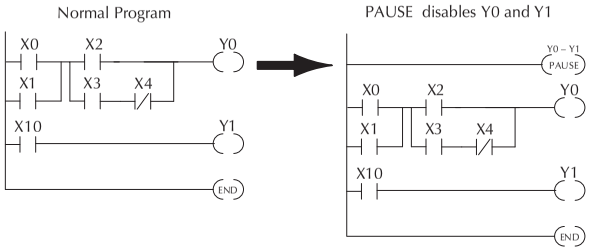

STOP Instruction: Sometimes during machine startup you need a way to quickly turn off all the outputs and return to Program Mode. You can use the STOP instruction. When this instruction is executed the CPU automatically exits Run Mode and enters Program Mode. Remember, all outputs are turned off during Program Mode. The following diagram shows an example of a condition that returns the CPU to Program Mode.

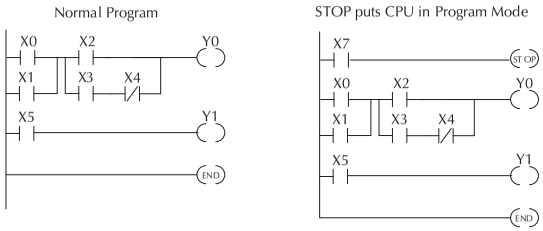

In the example shown above, you could trigger X7 which would execute the STOP instruction. The CPU would enter Program Mode and all outputs would be turned off.

Duplicate Reference Check

You can also check for multiple uses of the same output coil. Both programming devices offer a way to check for this condition.. For example, you can AUX 21, CHECK PROGRAM to check for duplicate references from a Handheld Programmer, or you can use the PLC Diagnostics menu option within ***Direct***SOFT 5. The following example shows how to perform the duplicate reference check with a Handheld Programmer.

Use AUX 21 to perform syntax check

CLR C 2 B 1 AUX ENT

```
AUX 21 CHECK PRO
1:SYN 2:DUP REF
```

Select duplicate reference check

→ ENT (You may not get the busy display if the program is not very long.)

```
BUSY
```

One of two displays will appear

Error Display (example)
(shows location in question)

```
$00024 E471
DUP COIL REF
```

Syntax OK display

```
NO DUP REFS
?
```

If you get an error, just press CLR and the Handheld will display the instruction where the error occurred. Correct the problem and continue running the Duplicate Reference check until no duplicate references are found.

NOTE: You can use the same coil in more than one location, especially in programs containing Stage instructions and/or OROUT instructions. The Duplicate Reference check will find occurrences, even though they are acceptable.

Run Time Edits

The DL05 Micro PLC allows you to make changes to the application program during Run Mode. These edits are not "bumpless." Instead, CPU scan is momentarily interrupted (and the outputs are maintained in their current state) until the program change is complete. This means if the output is off, it will remain off until the program change is complete. If the output is on, it will remain on.

WARNING: Only authorized personnel fully familiar with all aspects of the application should make changes to the program. Changes during Run Mode become effective immediately. Make sure you thoroughly consider the impact of any changes to minimize the risk of personal injury or damage to equipment. There are some important operational changes during Run Time Edits.
1. If there is a syntax error in the new instruction, the CPU will not enter the Run Mode.
2. If you delete an output coil reference and the output was on at the time, the output will remain on until it is forced off with a programming device.
3. Input point changes are not acknowledged during Run Time Edits, so, if you're using a high-speed operation and a critical input comes on, the CPU may not see the change.

Not all instructions can be edited during a Run Time Edit session. The following list shows the instructions that can be edited.

Mnemonic	Description
TMR	Timer
TMRF	Fast timer
TMRA	Accumulating timer
TMRAF	Accumulating fast timer
CNT	Counter
UDC	Up / Down counter
SGCNT	Stage counter
STR, STRN	Store, Store not
AND, ANDN	And, And not
OR, ORN	Or, Or not
STRE, STRNE	Store equal, Store not equal
ANDE, ANDNE	And equal, And not equal
ORE, ORNE	Or equal, Or not equal
STR, STRN	Store greater than or equal Store less than
AND, ANDN	And greater than or equal And less than

Mnemonic	Description
OR, ORN	Or greater than or equal or less than
LD	Load data (constant)
LDD	Load data double (constant)
ADDD	Add data double (constant)
SUBD	Subtract data double (constant)
MUL	Multiply (constant)
DIV	Divide (constant)
CMPD	Compare accumulator (constant)
ANDD	And accumulator (constant)
ORD	Or accumulator (constant)
XORD	Exclusive or accumulator (constant)
LDF	Load discrete points to accumulator
OUTF	Output accumulator to discrete points
SHFR	Shift accumulator right
SHFL	Shift accumulator left
NCON	Numeric constant

We'll use the program logic shown to describe how this process works. In the example, we'll change X0 to C10. Note, the example assumes you have already placed the CPU in Run Mode.

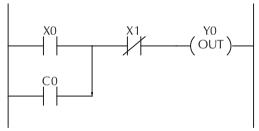

Use the MODE key to select Run Time Edits

MODE NEXT NEXT ENT

```
*MODE CHANGE*
RUN TIME EDIT?
```

Press ENT to confirm the Run Time Edits

ENT (Note, the RUN LED on the D2–HPP Handheld starts flashing to indicate Run Time Edits are enabled.)

```
*MODE CHANGE*
RUNTIME EDITS
```

Find the instruction you want to change (X0).

SHIFT X SET A 0 SHIFT FD REF FIND

```
$00000 STR X0
```

Press the arrow key to move to the X. Then enter the new contact (C10).

→ → SHIFT C 2 B 1 A 0 ENT

```
RUNTIME EDIT?
STR C10
```

Press ENT to confirm the change.

ENT (Note, once you press ENT, the next address is displayed.)

```
OR C0
```

Forcing I/O Points

There are many times, especially during machine startup and troubleshooting, that you need the capability to force an I/O point to be either on or off. Before you use a programming device to force any data type it is important you understand how the DL05 CPUs process the forcing requests.

WARNING: Only authorized personnel fully familiar with the application should make program changes. Do thoroughly consider the impact of any changes to minimize the risk of personal injury or damage to equipment.

Bit Forcing — Bit forcing temporarily changes the status of a discrete bit. For example, you may want to force an input on even though the program has turned it off. This allows you to change the point status stored in the image register. The forced value will be valid until the CPU writes to the image register location during the next scan. This is useful you just need to force a bit on to trigger another event.

The following diagrams show a brief example of how you could use the D2–HPP Handheld Programmer to force an I/O point. The example assumes you have already placed the CPU into Run Mode.

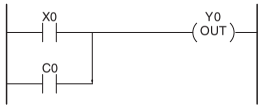

From a clear display, use the following keystrokes

Use the PREV or NEXT keys to select the Y data type. (Once the Y appears, press 0 to start at Y0.)

Use arrow keys to select point, then use ON and OFF to change the status

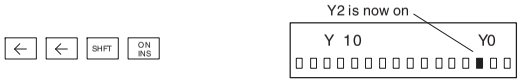

Bit Forcing with Direct Access

From a blank display, use the following keystrokes to force Y7 ON

From a blank display, use the following keystrokes to force Y7 OFF

Memory Cartridge/ Real Time Clock

CHAPTER 10

In This Chapter...

General Information about the D0–01MC 10–2
Setting the Write Enable/Disable Jumper 10–3
Plugging-in the Memory Cartridge 10-4
Software and Firmware Requirements 10–5
Naming the Memory Cartridge 10–6
Setting the Time and Date 10–7
Memory Transfers 10–8
LED Indicator Lights 10–9
Password Protected Programs 10–9
Memory Map and Forwarding Range 10–10
Battery Back-up During AC Power Loss 10–11
Specifications and Agency Approvals 10–12
Clock/Calendar Instructions 10–13
Error Codes 10–18

General Information about the D0–01MC

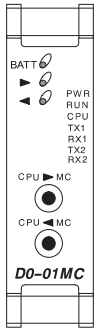

The D0–01MC is a battery-backed RAM memory module with a clock/calendar function that installs only in the DL05 PLC option slot. The MC backs-up the ladder program and data in CMOS RAM. The on–board lithium battery lasts up to three years. The module's V–memory maps one–for–one to the PLC's memory locations.

When the Memory Cartridge is inserted in the option slot, it automatically becomes the source of the controlling program. It is also where the program is accessed. You can choose to overwrite the program residing in the PLC via a pushbutton on the face of the module, but you may chose not to.

You can copy the program from the PLC to the MC or from the MC to the PLC or you can operate directly from the MC. By removing the module, you return control to the PLC's internal program.

Two pushbuttons on the face of the module initiate memory copies. The pushbuttons are clearly marked to indicate the direction of the copy, and a green LED flashes to confirm the direction and success of the memory copy.

WARNING: The D0–01MC will only work in the DL05 PLC, it will not work in the DL06 PLC.

Jumper Selects Write Enable or Disable

A jumper enables/disables the write function in the MC. Write disable prevents overwriting the MC memory. Write enable allows overwriting the MC memory. See page 10–3 for more information.

Low Battery Alert

A red LED alerts you to a low battery condition. If the battery drops below 2.5V the BATT LED comes on, and an internal bit is set. You can use the internal bit to activate alarm functions or to execute an orderly shut–down. See page 10–11 for more information.

Clock/Calendar

The date and time are easily set or accessed using *Direct*SOFT, Version 3.0b or later, programming software. The "year" field contains four digits so it is ready for Y2K and beyond.

Specifications

Environmental specifications for the D0–01MC are the same as for the DL05 PLCs. UL and CE approvals are pending. (Go to **www.automationdirect.com** for the latest UL and CE updates.) See page 10–12 for detailed specifications.

New Ladder Instructions

New ladder instructions are available when using the D0–01MC. See page 10–13 for Date and Time instructions. The MOVMC instruction has the ability to use a constant (K value) when used with the Memory Cartridge.

Error Code Changes

Two Error Codes have expanded definitions when using the Memory Cartridge. (See page 10–18).

Setting the Write Enable/Disable Jumper

The position of jumper J1 determines whether or not the Memory Cartridge can be overwritten. The Write Disable position is used only for transporting a program. With J1 in the Write Disable position the Memory Cartridge program can be copied to the CPU, but the PLC cannot be put in RUN mode. The PLC can only be put in the RUN mode with J1 in the Write Enable position. Write failures will generate the E104 Error Code (for more information see page 10–18).

Write Enable

Set the jumper as shown in Figure 1 if you want the CPU to be able to overwrite the Memory Cartridge.

Figure 1

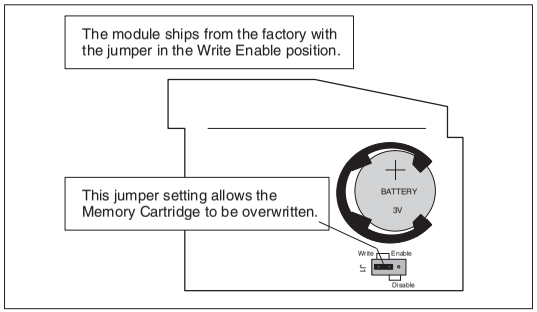

WARNING: Power to the DL05 PLC must be disconnected before inserting or removing the D0–01MC Memory Cartridge. Failure to disconnect power could result in serious damage to the module, the PLC or both.

Write Disable

Set the jumper as shown in Figure 2 if you **do not** want the CPU or *Direct*SOFT 5 to be able to overwrite the Memory Cartridge.

Figure 2

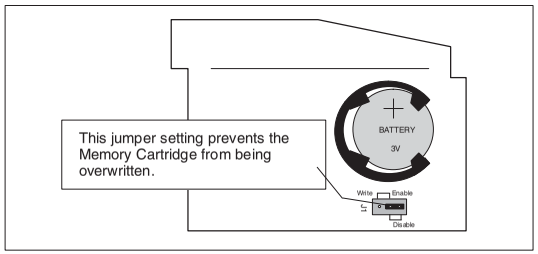

Plugging-in the Memory Cartridge

Remove the Slot Cover

Remove the protective cover from the DL05 option card slot by squeezing the pinch tabs and lifting the cover off.

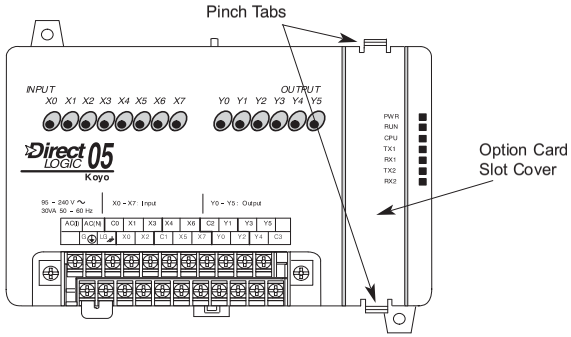

Insert the Memory Cartridge

Insert the D0-01MC module into the open option card slot. The printed markings on the module should be oriented in the same direction as the markings on the PLC. The female connector on the printed circuit board of the module will align with the male connector on the PLC mother board. Press the module into the slot until the front of the module is flush with the front of the PLC.

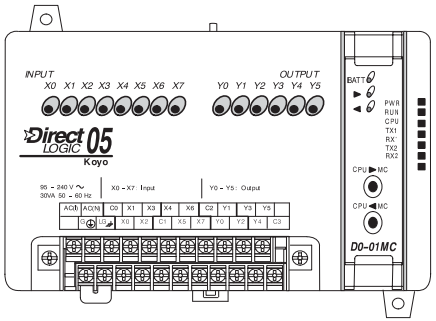

WARNING: Power to the DL05 PLC must be disconnected before inserting or removing the D0-01MC Memory Cartridge/Real Time Clock. Failure to disconnect power could result in serious damage to the module, the PLC or both.

Software and Firmware Requirements

How to Update Your *Direct*SOFT Programming Software

You will need *Direct*SOFT 5 Version 5.0 (or later) to use all features of the D0–01MC. If you have a licensed copy of *Direct*SOFT, contact AutomationDirect about a software upgrade to *Direct*SOFT 5 (PC-DSOFT5).

Your DL05 must have Version 5.10, or later, firmware to operate correctly with all features of the D0–01MC. To determine your firmware revision level, connect to the DL05 with *Direct*SOFT 5 programming software, and click on **PLC > Diagnostics > System Information**. This will bring up the System Information screen.

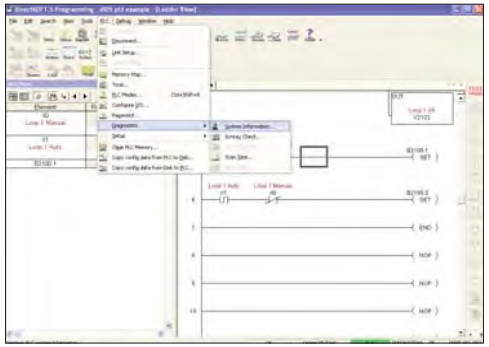

The "CPU Version:" will tell you what firmware revision level is installed in your PLC.

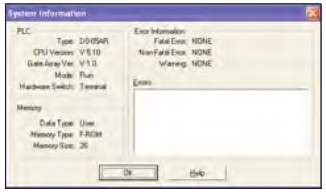

How to Update Your DL05 Firmware

If your DL05 requires new firmware, you may download the latest firmware and upgrade tool from our website. Point your browser to **www.automationdirect.com**, and click on **Technical Support**. There you will find the latest firmware for the DL05 by going to **Downloads**, then **Firmware Upgrades**. Be sure to download the **Koyo Upgrade** tool and the **Firmware Binary** file.

Follow the upgrade instructions contained in the downloaded files. Cycle power after upgrading the firmware in your DL05 PLC, and *Direct*SOFT 5 will recognize the new features available to your PLC.

Naming the Memory Cartridge

*Direct*SOFT 5 allows you to name your Memory Cartridge. Use this feature to identify a specific machine, a version number for your ladder logic program, etc.

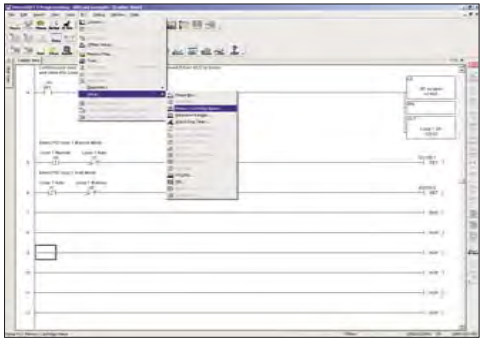

Up to 8 Alphanumeric Characters

Within *Direct*SOFT 5, click on PLC/Setup/Memory Cartridge Name to create a name for the Memory Cartridge. You can use up to 8 alphanumeric or special characters.

When you type a name in the "Cartridge Name" field, you can save the name to disk by clicking on the button with the arrow pointing to the disk, which will store the name in the *Direct*SOFT 5 project folder. You can also read the name from the project folder (if the Memory Cartridge was previously named) by clicking on the button with the arrow coming from the disk.

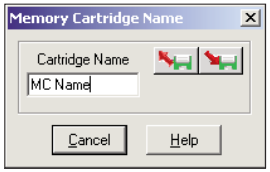

If the PC is connected to the PLC, the PLC-icon buttons will become active. When the PLC-icon buttons are active, you can also transfer the name to the PLC or transfer an existing name from the PLC into *Direct*SOFT 5. Transfering the Memory Cartridge name into the PLC transfers the name directly to the Memory Cartridge.

Name is Retained in Cartridge Memory and Project Folder

Naming the Memory Cartridge is independent of the ladder logic program – although the name is stored in the *Direct*SOFT 5 project folder. It is also stored in the battery-backed memory on-board the Memory Cartridge. Transferring a program from the PLC does **not** change the name of the Memory Cartridge even if the program in the PLC originated as a program in another Memory Cartridge that has a different name.

If you require the name of your Memory Cartridge to change, you must change it using the screen shown.

Setting the Time and Date

Use *Direct*SOFT 5 to set the date and time in your Memory Cartridge, connect to the DL05. Inside the Project Window, click on PLC/Setup/Calendar to bring up the Calendar window.

NOTE: You can also use ladder instructions to set the date and time. See Clock/Calendar Instructions beginning on page 10–13.

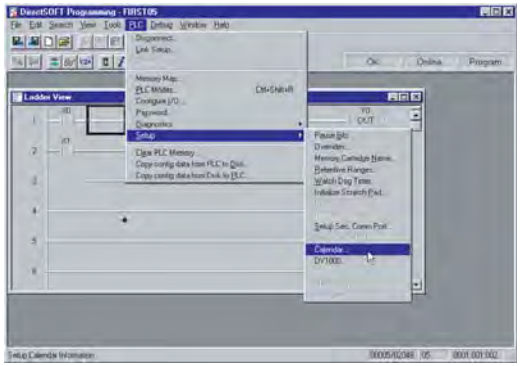

The first time you view the Calendar window, you will see the factory settings for date and time, as shown below. You can either change each field individually, or you can click on the "Get PC Time" button. If you click on the "Get PC Time" button, you will see the values change in all fields. Note, the values will not continue to update. In order to save this new time, you need to click on the "Write to PLC" button.

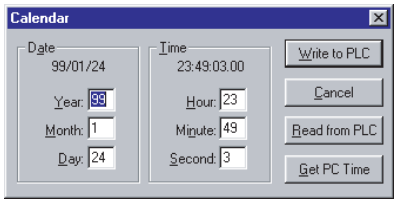

The clock and calendar functions are stored in the following V-memory locations:

V7766	Seconds	2 digits BCD	00 - 59
V7767	Minutes	2 digits BCD	00 - 59
V7770	Hours	2 digits BCD	00 - 23
V7771	Day of the Week (00=Sun, 01=Mon, etc.)	2 digits BCD	00 - 06
V7772	Day of the Month	2 digits BCD	01 - 31
V7773	Month	2 digits BCD	01 - 12
V7774	Year	4 digits BCD	1970 - 2069

Memory Transfers

CPU to MC

With system supply power on and the Memory Cartridge installed, put the PLC in STOP mode. Press and hold the CPU > MC button for about one second, then release. This will transfer the program from the CPU to the Memory Cartridge. To confirm the transfer, the associated LED will blink for a few seconds. If the LED does not blink, the PLC is not in STOP mode. If the LED continues to blink, an error has occurred. To acknowledge the error, press either of the two buttons on the face of the module.

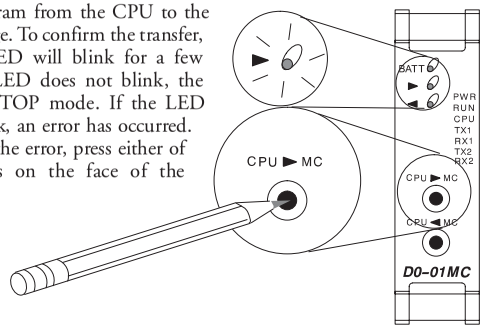

*NOTE: Memory transfer functions cannot be accessed while the PLC is in RUN mode. Use the toggle switch on the DL05 to switch the PLC out of RUN mode, or use **Direct**SOFT 5 programming software to make the change.*

10

MC to CPU

With system supply power on and the Memory Cartridge installed, put the PLC in STOP mode. Press and hold the CPU < MC button for about one second, then release. This will transfer the program from the Memory Cartridge to the CPU. To confirm the transfer, the associated LED will blink for a few seconds. If the LED does not blink, the PLC is not in STOP mode. If the LED continues to blink, an error has occurred.

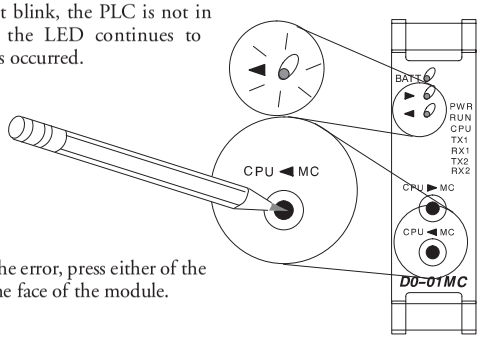

To acknowledge the error, press either of the two buttons on the face of the module.

LED Indicator Lights

The three indicator lights on the face of the Memory Cartridge perform the following functions:

LED Indicator	Condition	Meaning
BATT (red)	On	Replace battery
CPU > MC (green)	Flashes for several seconds (150 msec on; 150 msec off)	Successful completion of transfer
	Does not flash	No memory transfer: change to STOP mode
	Flashes continually with CPU < MC LED steady on	Error: press either button to clear
CPU < MC (green)	Flashes for several seconds (150 msec on; 150 msec off)	Successful completion of transfer
	Does not flash	No memory transfer; change to STOP mode
	Flashes continually with CPU > MC LED steady on	Error: press either button to clear

Password Protected Programs

Password protected programs cannot be transferred from the CPU on-board memory to the Memory Cartridge. Also, password protected programs cannot be transferred from the Memory Cartridge to the CPU on-board memory. Programs can only be transferred in either direction when a password is not used.

10

PLC Mode	Password		CPU > MC	CPU < MC
	DL05	D0-01MC		
RUN	No	No	Disable (No LED ON)	Disable (No LED ON)
	Yes	No	Disable (No LED ON)	Disable (No LED ON)
	No	Yes	Disable (No LED ON)	Disable (No LED ON)
	Yes	Yes	Disable (No LED ON)	Disable (No LED ON)
Program	No	No	Enable (> LED blinks)	Enable (< LED blinks)
	Yes	No	Disable (< LED keeps blinking)	Disable (< LED keeps blinking)
	No	Yes	Disable (> LED keeps blinking)	Disable (> LED keeps blinking)
	Yes	Yes	Disable (> & < LED keeps blinking)	Disable (> & < LED keeps blinking)

Memory Map and Forwarding Range

The Memory Cartridge's on-board memory maps one-for-one to the DL05 PLC. The memory types represented in the table below have the same designated locations in either the Memory Cartridge or the DL05 PLC.

Memory Type	Range
Program memory	2K (all)
V-memory	V00000 - V00177 (128 words) V00200 - V00777 (384 words) V01000 - V01177 (128 words) V01200 - V07377 (3200 words) V07400 - V07577 (128 words) V07600 - V07777 (128 words) V40400 - V40417 (16 words) V40500 - V40517 (16 words) V40600 - V40637 (32 words) V41000 - V41017 (16 words) V41100 - V41107 (8 words) V41140 - V41147 (8 words) V41200 - V41237 (32 words)
System Parameters	0.5K (all)

Battery Back-up During AC Power Loss

What if the Battery Dies?

In the event of AC power loss to the DL05 PLC, the on-board lithium battery will back-up the program logic and data values for a period up to three years.

If the Memory Cartridge's battery voltage drops below approximately 2.5VDC, the red "BATT" LED will illuminate on the face of the module. At the same time, the Special Relay SP43 is set to "1." You can use this internal bit as a contact in your ladder program. Use it to trigger an external alarm – indicating that it is time to change the battery.

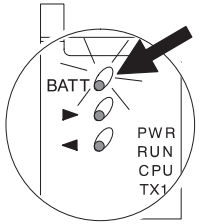

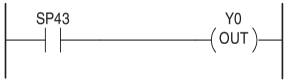

During normal operation, the AC power to the PLC will retain the memory in the Memory Cartridge. If the AC power fails, or is disconnected, a super-capacitor will continue to hold the memory for 4 to 7 days even if the battery is too weak to hold the memory. Only after the capacitor has discharged and the battery has become too weak to retain the memory will program logic and data memory be lost.

Battery Type

When you see the "BATT" indicator light, replace the battery with a CR2032, coin-type 3.0V lithium battery (**Automationdirect.com**, part no. D0–BAT). Do you need to change the battery while retaining the stored program? If the answer is yes, change the battery during the 4 – 7 days that the super-capacitor will retain the program after AC power is disconnected.

NOTE: Be sure your hands are clean and dry before handling the battery. Moisture will corrode the battery surfaces and shorten the life of the battery.

Removing and Replacing the Battery

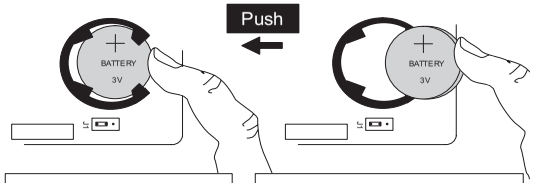

To remove the battery:
Push the battery in the direction indicated. You will feel the battery press against the spring in the battery socket. Fully compress the spring and lift the battery out of the socket.

To replace the battery:
The positive (+) side should be facing out. The battery should enter the socket as shown (at about a 30° angle to the printed circuit board). Push the battery into the socket until the battery snaps into place.

Specifications and Agency Approvals

Specifications	
Ambient Operating Temperature	0 °C to 55 °C (32 °F to 131 °F)
Storage Temperature	-20 °C to 70 °C (-4°F to 158°F)
Ambient Humidity	5% to 95% non-condensing
Atmosphere	No corrosive gases, max. environmental pollution = 2, UL840
Vibration Resistance	MIL STD 810C, method 514.2
Shock Resistance	MIL STD 810C, method 516.2
Noise Immunity	NEMA ICS3-304 Impulse noise 1µs, 1000V FCC Class A RFI (144MHz, 430MHz, 10W, 10cm)
Size	120mm x 95mm x 65mm
Weight	50g
Battery Number	CR2032 (Automationdirect.com part # D0-BAT)
Battery Type	Coin type, 3.0V Lithium Battery, 190mAh
Battery Life	Typ 3 years (at 25°C)
Battery Voltage	Typ 3.0VDC
Battery Abnormal Voltage	Typ < 2.5VDC Indication: illuminates red LED and sets SP43 to "1"
Write Protect	Internal jumper pins
Memory Type	CMOS RAM 32KBytes
Calendar	Frequency accuracy: ±20PPM (25°C) Temperature characteristic: +10/-20PPM (0°- 55°C)
Agency Approvals	UL, CE (pending)

Clock/Calendar Instructions

Date (DATE)

The Date instruction can be used to set the date in the Memory Cartridge. The instruction requires two consecutive V-memory locations (Vaaa) to *set the date*. If the values in the specified locations are not valid, the date will not be set. The current date can be read from four consecutive V-memory locations (V7771–V7774).

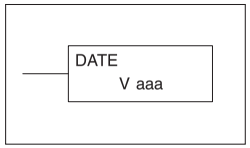

Date	Range	V-Memory Location (BCD) (READ Only)
Year	1970-2069	V7774
Month	1-12	V7773
Day of Month	1-31	V7772
Day of Week	0-06	V7771
The values entered for the day of week are: 0=Sunday, 1=Monday, 2=Tuesday, 3=Wednesday, 4=Thursday, 5=Friday, 6=Saturday		

Operand Data Type		DL05 Range
	A	aaa
V-memory	V	All (See page 10-9)

In the following example, when C0 is on, the constant value (K00010301) is loaded into the accumulator using the Load Double instruction (C0 can be a contact from a one shot (PD) instruction). The value in the accumulator is output to V2000 using the Out Double instruction. The Date instruction uses the value in V2000 to set the date in the CPU. The example loads the date January 3, 2000.

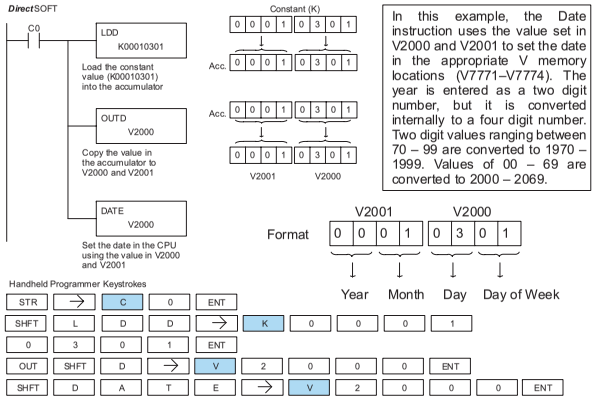

Time (TIME)

The Time instruction can be used to set the time (24 hour clock) in the CPU. The instruction requires two consecutive V-memory locations (Vaaa) which are used to *set the time*. If the values in the specified locations are not valid, the time will not be set. The current time can be read from memory locations V7766–V7770.

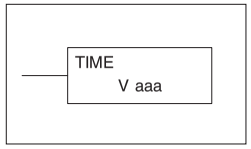

Date	Range	V Memory Location (BCD) (READ Only)
Seconds	0-59	V7766
Minutes	0-59	V7767
Hour	0-23	V7770

Operand Data Type		DL05 Range
	A	aaa
V-memory	V	All (See page 10-9)

In the following example, when C0 is on, the constant value (K73000) is loaded into the accumulator using the Load Double instruction (C0 should be a contact from a one shot (PD) instruction). The value in the accumulator is output to V2000 using the Out Double instruction. The Time instruction uses the value in V2000 to set the time in the CPU.

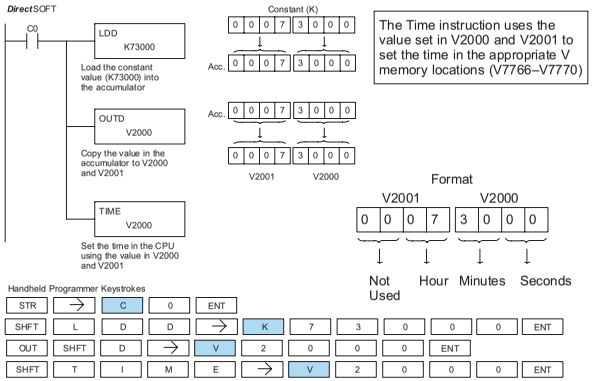

Move Memory Cartridge / Load Label (MOVMC) (LDLBL)

The Move Memory Cartridge instruction is used to copy data between V-memory and program ladder memory. The Load Label instruction is *only* used with the MOVMC instruction when copying data *from* program ladder memory *to* V-memory.

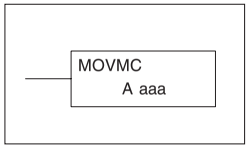

To copy data between V-memory and program ladder memory, the function parameters are loaded into the first two levels of the accumulator stack and the accumulator by two additional instructions. Listed below are the steps necessary to program the Move Memory Cartridge and Load Label functions.

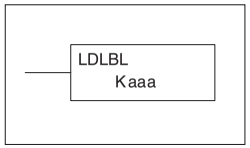

Step 1: Load the number of words to be copied into the second level of the accumulator stack.

Step 2: Load the offset for the data label area in the program ladder memory and the beginning of the V-memory block into the first level of the accumulator stack.

Step 3: Load the *source data label* (LDLBL Kaaa) into the accumulator when copying data from ladder memory to V-memory. Load the *source address* into the accumulator when copying data from V-memory to ladder memory. This is where the value will be copied from. If the source address is a V-memory location, the value must be entered in HEX.

Step 4: Insert the MOVMC instruction which specifies destination (Aaaa). This is where the value will be copied to.

Operand Data Type		DL05 Range
	A	aaa
V-memory	V	All (See page 10-9)
Constant	K	1-FFFF

NOTE: The MOVMC instruction supports K values only when the D0–01MC is installed. Without the D0–01MC installed, the MOVMC instruction supports V-memory values only.

Discrete Bit Flags	Description
SP53	On if there is a table pointer error

Copy Data From a Data Label Area to V-memory

In the following example, data is copied from a Data Label Area to V-memory. When X1 is on, the constant value (K4) is loaded into the accumulator using the Load instruction. This value specifies the length of the table and is placed in the second stack location after the next Load and Load Label (LDLBL) instructions are executed. The constant value (K0) is loaded into the accumulator using the Load instruction. This value specifies the offset for the source and destination data, and is placed in the first stack location after the LDLBL instruction is executed. The source address where data is being copied from is loaded into the accumulator using the LDLBL instruction. The MOVMC instruction specifies the destination starting location and executes the copying of data from the Data Label Area to V-memory.

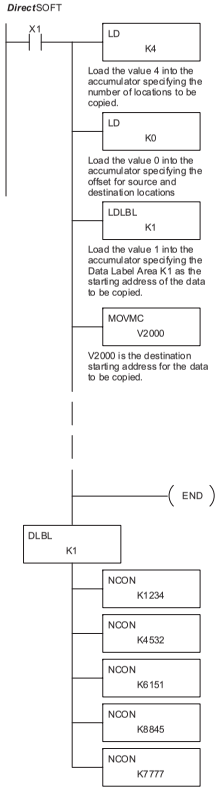

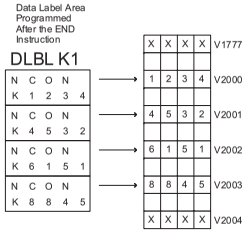

Handheld Programmer Keystrokes

$ STR	→	B 1	ENT										
SHFT	L ANDST	D 3	→	SHFT	K JMP	E 4	ENT						
SHFT	L ANDST	D 3	→	SHFT	K JMP	A 0	ENT						
SHFT	L ANDST	D 3	L ANDST	B 1	L ANDST	→	B 1	ENT					
SHFT	M ORST	O INST#	V AND	M ORST	C 2	→	C 2	A 0	A 0	A 0	ENT		

Copy Data From V-memory to a Data Label Area

In the following example, data is copied from V-memory to a data label area. When X1 is on, the constant value (K4) is loaded into the accumulator using the Load instruction. This value specifies the length of the table and is placed in the second stack location after the next Load and Load Address instructions are executed. The constant value (K2) is loaded into the accumulator using the Load instruction. This value specifies the offset for the source and destination data, and is placed in the first stack location after the Load Address instruction is executed. The source address where data is being copied from is loaded into the accumulator using the Load Address instruction. The MOVMC instruction specifies the destination starting location and executes the copying of data from V-memory to the data label area.

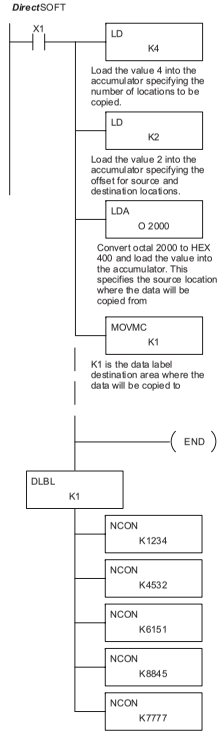

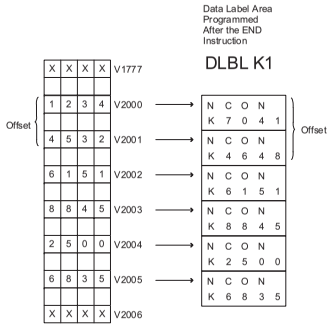

Handheld Programmer Keystrokes

$ STR	→	B 1	ENT										
SHFT	L ANDST	D 3	→	SHFT	K JMP	E 4	ENT						
SHFT	L ANDST	D 3	→	SHFT	K JMP	C 2	ENT						
SHFT	L ANDST	D 3	A 0	→	C 2	A 0	A 0	A 0	ENT				
SHFT	M ORST	O INST#	V AND	M ORST	C 2	→	SHFT	K JMP	B 1	ENT			

Error Codes

The full list of Error Codes associated with the DL05 PLC is contained in Appendix B. The following error codes have different or expanded definitions when associated with the D0–01MC Memory Cartridge. Also see page 10–3 concerning error messages you may encounter when the Memory Cartridge is in the Write Disable position.

DL05 Error Code	Description
E104 WRITE FAILED	A write to the CPU was not successful. Disconnect the power, remove the Memory Cartridge, and make sure the Memory Cartridge is not Write Disabled.
E505 INVALID INSTRUCTION	An invalid instruction was entered into the handheld programmer or a program which includes an instruction which requires the Memory Cartridge (D0-01MC) was run in a DL05 PLC without a Memory Cartridge.

Auxiliary Functions

In This Appendix:

Introduction A–2
AUX 2* — RLL Operations A–4
AUX 3* — V-memory Operations A–4
AUX 4* — I/O Configuration A–4
AUX 5* — CPU Configuration A–5
AUX 6* — Handheld Programmer Configuration A–8
AUX 7* — EEPROM Operations A–8
AUX 8* — Password Operations A–9

Introduction

A

Purpose of Auxiliary Functions

Many CPU setup tasks involve the use of Auxiliary (AUX) Functions. The AUX Functions perform many different operations, including clearing ladder memory, displaying the scan time, and copying programs to EEPROM in the handheld programmer. They are divided into categories that affect different system resources. You can access the AUX Functions from *Direct*SOFT 5 or from the D2–HPP Handheld Programmer. The manuals for those products provide step-by-step procedures for accessing the AUX Functions. Some of these AUX Functions are designed specifically for the Handheld Programmer setup, so they will not be needed (or available) with the *Direct*SOFT 5 package. Even though this Appendix provides many examples of how the AUX functions operate, you should supplement this information with the documentation for your choice of programming device.

NOTE: The Handheld Programmer may have additional AUX functions that are not supported with the DL05 PLCs.

AUX Function and Description		DL05
AUX 2* — RLL Operations		
21	Check Program	*
22	Change Reference	*
23	Clear Ladder Range	*
24	Clear All Ladders	*
AUX 3* — V-Memory Operations		
31	Clear V Memory	*
AUX 4* — I/O Configuration		
41	Show I/O Configuration	*
AUX 5* — CPU Configuration		
51	Modify Program Name	*
53	Display Scan Time	*
54	Initialize Scratchpad	*
55	Set Watchdog Timer	*
56	Set Communication Port 2	*
57	Set Retentive Ranges	*
58	Test Operations	*
59	Override Setup	*
5B	HSIO Interface Configuration	*
5D	Scan Control Setup	*

AUX Function and Description		DL05
AUX 6* — Handheld Programmer Configuration		
61	Show Revision Numbers	*
62	Beeper On / Off	HP
65	Run Self Diagnostics	HP
AUX 7* — EEPROM Operations		
71	Copy CPU memory to HPP EEPROM	HP
72	Write HPP EEPROM to CPU	HP
73	Compare CPU to HPP EEPROM	HP
74	Blank Check (HPP EEPROM)	HP
75	Erase HPP EEPROM	HP
76	Show EEPROM Type (CPU and HPP)	HP
AUX 8* — Password Operations		
81	Modify Password	*
82	Unlock CPU	*
83	Lock CPU	*

*NOTE: * - Supported HP - Handheld Programmer function*

A

Accessing AUX Functions via *Direct*SOFT 5

*Direct*SOFT 5 provides various menu options during both online and offline programming. Some of the AUX functions are only available during online programming, some only during offline programming, and some during both online and offline programming. The following diagram shows an example of the PLC operations menu available within *Direct*SOFT 5.

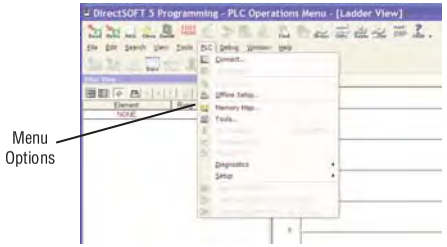

Accessing AUX Functions via the Handheld Programmer

You can also access the AUX functions by using the Handheld Programmer. Plus, remember some of the AUX functions are only available from the HPP. Sometimes the AUX name or description cannot fit on one display. If you want to see the complete description, just press the arrow keys to scroll left and right. Also, depending on the current display, you may have to press CLR more than once.

CLR AUX

```
AUX FUNCTION SELECTION
AUX 2* RLL OPERATIONS
```

Use NXT or PREV to cycle through the menus

NEXT

```
AUX FUNCTION SELECTION
AUX 3* V OPERATIONS
```

Press ENT to select sub-menus

ENT

```
AUX 3* V OPERATIONS
AUX 31 CLR V MEMORY
```

You can also enter the exact AUX number to go straight to the sub-menu.

Enter the AUX number directly

CLR D 3 B 1 AUX

```
AUX 3* V OPERATIONS
AUX 31 CLR V MEMORY
```

AUX 2* — RLL Operations

RLL Operations auxiliary functions allow you to perform various operations on the ladder program.

AUX 21 Check Program

Both the Handheld and *Direct*SOFT 5 automatically check for errors during program entry. However, there may be occasions when you want to check a program that has already been in the CPU. Two types of checks are available:

- Syntax
- Duplicate References

The Syntax check will find a wide variety of programming errors, such as missing END statements. If you perform this check and get an error, see Appendix B for a complete listing of programming error codes. Correct the problem and then continue running the Syntax check until the message, NO SYNTAX ERROR, appears.

Use the Duplicate Reference check to verify you have not used the same output coil reference more than once. Note, this AUX function will also find the same outputs even if they have been used with the OROUT instruction, which is perfectly acceptable.

This AUX function is available on the PLC Diagnostics sub-menu in *Direct*SOFT 5.

AUX 22 Change Reference

There will probably be times when you need to change an I/O address reference or control relay reference. AUX 22 allows you to quickly and easily change all occurrences, (within an address range), of a specific instruction. For example, you can replace every instance of X5 with X10.

AUX 23 Clear Ladder Range

There have been many times when we've taken existing programs and added or removed certain portions to solve new application problems. By using AUX 23 you can select and delete a portion of the program. *Direct*SOFT 5 does not have a menu option for this AUX function, but you can just select the appropriate portion of the program and cut it with the editing tools.

AUX 24 Clear Ladders

AUX 24 clears the entire program from CPU memory. Before you enter a new program, you should always clear ladder memory. This AUX function is available on the PLC/Clear PLC sub-menu within *Direct*SOFT 5.

AUX 3* — V-memory Operations

AUX 31 Clear V-Memory

AUX 31 clears all the information from the V-memory locations available for general use. This AUX function is available on the PLC/Clear PLC sub-menu within *Direct*SOFT 5.

AUX 4* — I/O Configuration

AUX 41 Show I/O Configuration

This AUX function allows you to display the current I/O configuration on the DL05. Both the Handheld Programmer and *Direct*SOFT 5 will show the I/O configuration.

AUX 5* — CPU Configuration

The following auxiliary AUX functions allow you to setup, view, or change the CPU configuration.

AUX 51 Modify Program Name

DL05 PLCs can use a program name for the CPU program or a program stored on EEPROM in the Handheld Programmer (**multiple programs cannot be stored on the EEPROM**). The program name can be up to eight characters in length and can use any of the available characters (A–Z, 0–9). AUX 51 allows you to enter a program name. You can also perform this operation in *Direct*SOFT 5 by using the PLC/Setup sub-menu. Once you've entered a program name, you can only clear the name by using AUX 54 to reset the system memory. Make sure you understand the possible effects of AUX 54 before you use it!

AUX 53 Display Scan Time

AUX 53 displays the current, minimum, and maximum scan times. The minimum and maximum times are the ones that have occurred since the last Program Mode to Run Mode transition. You can also perform this operation from within *Direct*SOFT 5 by using the PLC/Diagnostics sub-menu.

AUX 54 Initialize Scratchpad

The CPU maintains system parameters in a memory area often referred to as the "scratchpad". In some cases, you may make changes to the system setup that will be stored in system memory. For example, if you specify a range of Control Relays (CRs) as retentive, these changes are stored.

NOTE: You may never have to use this feature unless you have made changes that affect system memory. Usually, you'll only need to initialize the system memory if you are changing programs and the old program required a special system setup. You can usually change from program to program without ever initializing system memory.

AUX 54 resets the system memory to the default values. You can also perform this operation from within *Direct*SOFT 5. by using the PLC/Setup sub-menu.

AUX 55 Set Watchdog Timer

DL05 PLCs have a "watchdog" timer that is used to monitor the scan time. The default value set from the factory is 200 ms. If the scan time exceeds the watchdog time limit, the CPU automatically leaves RUN mode and enters PGM mode. The Handheld displays the following message E003 S/W TIMEOUT when the scan overrun occurs.

Use AUX 55 to increase or decrease the watchdog timer value. You can also perform this operation from within *Direct*SOFT 5 by using the PLC/Setup sub-menu.

AUX 56 CPU Network Address

Since the DL05 CPU has an additional communication port, you can use the Handheld to set the network address for port 2 and the port communication parameters. The default settings are:

- Station address 1
- HEX mode
- Odd parity

You can use this port with either the Handheld Programmer, ***Direct***SOFT 5, or, as a communication port for either ***Direct***NET or Modbus. Refer to either ***Direct***NET or Modbus manuals for additional information about communication settings required for network operation.

NOTE: You will only need to use this procedure if you have port 2 connected to a network. Otherwise, the default settings will work fine.

Use AUX 56 to set the network address and communication parameters. You can also perform this operation from within ***Direct***SOFT 5 by using the PLC/Setup sub-menu.

AUX 57 Set Retentive Ranges

DL05 CPUs provide certain ranges of retentive memory by default. Some of the retentive memory locations are backed up by a super-capacitor, and others are in non-volatile FLASH memory. The FLASH memory locations are V7400 to V7577 (may be non-volatile if MOV instruction is used). The default ranges are suitable for many applications, but you can change them if your application requires additional retentive ranges or no retentive ranges at all. The default settings are:

DL05		
Memory Area	**Default Range**	**Available Range**
Control Relays	C400 – C777	C0 – C777
V-Memory	V1400 – V7777	V0 – V7777
Timers	None by default	T0 – T177
Counters	CT0 – CT177	CT0 – CT177
Stages	None by default	S0 – S377

Use AUX 57 to change the retentive ranges. You can also perform this operation from within ***Direct***SOFT 5 by using the PLC/Setup sub-menu.

WARNING: The DL05 CPUs do not have battery-backed RAM. The super-capacitor will retain the values in the event of a power loss, but only up to 3 weeks. (The retention time may be as short as 4 1/2 days in 60°C operating temperature.)

AUX 58 Test Operations

AUX 58 is used to override the output disable function of the Pause instruction. Use AUX 58 to program a single output or a range of outputs which will operate normally even when those points are within the scope of the pause instruction.

AUX 59 Bit Override

Bit override can be enabled on a point-by-point basis by using AUX 59 from the Handheld Programmer or, by a menu option from within ***Direct***SOFT 5. Bit override basically disables any changes to the discrete point by the CPU. For example, if you enable bit override for X1, and X1 is off at the time, then the CPU will not change the state of X1. This means that even if X1 comes on, the CPU will not acknowledge the change. So, if you used X1 in the program, it would always be evaluated as "off" in this case. Of course, if X1 was on when the bit override was enabled, then X1 would always be evaluated as "on".

There is an advantage available when you use the bit override feature. The regular forcing is not disabled because the bit override is enabled. For example, if you enabled the Bit Override for Y0 and it was off at the time, then the CPU would not change the state of Y0. However, you can still use a programming device to change the status. Now, if you use the programming device to force Y0 on, it will remain on and the CPU will not change the state of Y0. If you then force Y0 off, the CPU will maintain Y0 as off. The CPU will never update the point with the results from the application program or from the I/O update until the bit override is removed from the point. The following diagram shows a brief overview of the bit override feature. Notice the CPU does not update the Image Register when bit override is enabled.

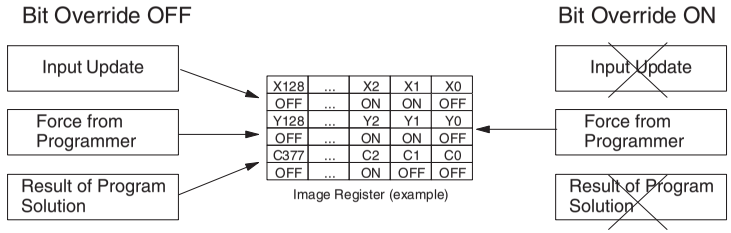

AUX 5B Counter Interface Configuration

AUX 5B is used with the High-Speed I/O (HSIO) function to select the configuration. You can choose the type of counter, set the counter parameters, etc. See Appendix E for a complete description of how to select the various counter features.

AUX 5D Select PLC Scan Mode

The DL05 CPU has two program scan modes: fixed and variable. In fixed mode, the scan time is lengthened to the time you specify (in milliseconds). If the actual scan time is longer than the fixed scan time, then the error code E504 BAD REF/VAL is displayed. In variable scan mode, the CPU begins each scan as soon as the previous scan's activities complete.

AUX 6* — Handheld Programmer Configuration

The following auxiliary functions allow you to setup, view, or change the Handheld Programmer configuration.

AUX 61 Show Revision Numbers

As with most industrial control products, there are cases when additional features and enhancements are made. Sometimes these new features only work with certain releases of firmware. By using AUX 61 you can quickly view the CPU and Handheld Programmer firmware revision numbers. This information (for the CPU) is also available from within *Direct*SOFT 5 from the PLC/Diagnostics sub-menu.

AUX 62 Beeper On/Off

The Handheld has a beeper that provides confirmation of keystrokes. You can use Auxiliary (AUX) Function 62 to turn off the beeper.

AUX 65 Run Self Diagnostics

If you think the Handheld Programmer is not operating correctly, you can use AUX 65 to run a self diagnostics program. You can check the following items.

- Keypad
- Display
- LEDs and Backlight
- Handheld Programmer EEPROM check

AUX 7* — EEPROM Operations

The following auxiliary functions allow you to move the ladder program from one area to another and perform other program maintenance tasks.

Transferrable Memory Areas

Many of these AUX functions allow you to copy different areas of memory to and from the CPU and handheld programmer. The following table shows the areas that may be mentioned.

Option and Memory Type	DL05 Default Range
1: PGM — Program	$00000 – $02047
2: V — V-memory	V00000 – V07777
3: SYS — System	Non-selectable copies system parameters
4: etc (All)— Program, System and non-volatile V-memory only	Non-selectable

AUX 71 CPU to HPP EEPROM

AUX 71 copies information from the CPU memory to an EEPROM installed in the Handheld Programmer. You can copy different portions of EEPROM (HP) memory to the CPU memory as shown in the previous table.

AUX 72 HPP EEPROM to CPU

AUX 72 copies information from the EEPROM installed in the Handheld Programmer to CPU memory in the DL05. You can copy different portions of EEPROM (HPP) memory to the CPU memory as shown in the previous table.

AUX 73 Compare HPP EEPROM to CPU

AUX 73 compares the program in the Handheld programmer (EEPROM) with the CPU program. You can compare different types of information as shown previously.

AUX 74 HPP EEPROM Blank Check

AUX 74 allows you to check the EEPROM in the handheld programmer to make sure it is blank. It's a good idea to use this function anytime you start to copy an entire program to an EEPROM in the handheld programmer.

AUX 75 Erase HPP EEPROM

AUX 75 allows you to clear all data in the EEPROM in the handheld programmer. You should use this AUX function before you copy a program from the CPU.

AUX 76 Show EEPROM Type

You can use AUX 76 to quickly determine what size EEPROM is installed in the Handheld Programmer.

AUX 8* — Password Operations

There are several AUX functions available that you can use to modify or enable the CPU password. You can use these features during on-line communications with the CPU, or, you can also use them with an EEPROM installed in the Handheld Programmer during off-line operation. This will allow you to develop a program in the Handheld Programmer and include password protection.

- AUX 81 — Modify Password
- AUX 82 — Unlock CPU
- AUX 83 — Lock CPU

AUX 81 Modify Password

You can use AUX 81 to provide an extra measure of protection by entering a password that prevents unauthorized machine operations. The password must be an eight-character numeric (0–9) code. Once you've entered a password, you can remove it by entering all zeros (00000000). (This is the default from the factory.)

Once you've entered a password, you can lock the CPU against access. There are two ways to lock the CPU with the Handheld Programmer.

- The CPU is always locked after a power cycle (if a password is present).
- You can use AUX 82 and AUX 83 to lock and unlock the CPU.

You can also enter or modify a password from within *Direct*SOFT 5 by using the PLC/Password sub-menu. This feature works slightly differently in *Direct*SOFT 5. Once you've entered a password, the CPU is automatically locked when you exit the software package. It will also be locked if the CPU is power cycled.

WARNING: Make sure you remember the password before you lock the CPU. Once the CPU is locked you cannot view, change, or erase the password. If you do not remember the password, you have to return the CPU to the factory for password removal. It is the policy of AutomationDirect to clear the PLC memory which includes the password and the program.

NOTE: The DL05 CPUs support multi-level password protection of the ladder program. This allows password protection while not locking the communication port to an operator interface. The multi-level password can be invoked by creating a password with an upper case "A" followed by seven numeric characters (e.g. A1234567).

AUX 82 Unlock CPU

AUX 82 can be used to unlock a CPU that has been password protected. *Direct*SOFT 5 will automatically ask you to enter the password if you attempt to communicate with a CPU that contains a password.

AUX 83 Lock CPU

AUX 83 can be used to lock a CPU that contains a password. Once the CPU is locked, you will have to enter a password to gain access. Remember, this is not necessary with *Direct*SOFT 5 since the CPU is automatically locked whenever you exit the software package.

DL05 Error Codes

APPENDIX B

In This Appendix:

DL05 Error Codes B–1

DL05 Error Code	Description
E003 SOFTWARE TIME-OUT	If the program scan time exceeds the time allotted to the watchdog timer, this error will occur. SP51 will be on and the error code will be stored in V7755. To correct this problem use AUX 55 to extend the time allotted to the watchdog timer.
E004 INVALID INSTRUCTION	The CPU attempted to execute an instruction code, but the RAM contents had a parity error. Performing a program download to the CPU in an electrically noisy environment can corrupt a program's contents. Clear the CPU program memory, and download the program again.
E043 MC BATTERY LOW	The battery in the CMOS RAM cartridge is low and should be replaced.
E104 WRITE FAILED	A write to the CPU was not successful. Disconnect the power, remove the CPU, and make sure the EEPROM is not write protected. If the EEPROM is not write protected, make sure the EEPROM is installed correctly. If both conditions are OK, replace the CPU.
E151 BAD COMMAND	A parity error has occurred in the application program. SP44 will be on and the error code will be stored in V7755 . This problem may possibly be due to electrical noise. Clear the memory and download the program again. Correct any grounding problems. If the error returns replace the Micro PLC.
E263 CONFIGURED I/O ADDRESS OUT OF RANGE	Out of range addresses have been assigned while manually configuring the I/O. Correct the address assignments using AUX46.
E311 HP COMM ERROR 1	A request from the handheld programmer could not be processed by the CPU. Clear the error and retry the request. If the error continues replace the CPU. SP46 will be on and the error code will be stored in V7756.
E312 HP COMM ERROR 2	A data error was encountered during communications with the CPU. Clear between the two devices, replace the handheld programmer, then if necessary replace the CPU. The error code will be stored in V7756.
E313 HP COMM ERROR 3	An address error was encountered during communications with the CPU. Clear the error and retry the request. If the error continues, check the cabling between the two devices, replace the handheld programmer, then if necessary replace the CPU. The error code will be stored in V7756.
E316 HP COMM E ERROR 6	A mode error was encountered during communications with the CPU. Clear the error and retry the request. If the error continues, replace the handheld programmer, then if necessary replace the CPU. The error code will be stored in V7756.
E320 HP COMM TIME-OUT	The CPU did not respond to the handheld programmer communication request. Check to ensure cabling is correct and not defective. Power cycle the system. If the error continues, replace the CPU first and then the handheld programmer, if necessary.
E321 COMM ERROR	A data error was encountered during communication with the CPU. Check to ensure cabling is correct and not defective. Power cycle the system. If the error continues, replace the CPU first and then the handheld programmer, if necessary.

DL05 Error Code	Description
E360 HP PERIPHERAL PORT TIME-OUT	The device connected to the peripheral port did not respond to the handheld programmer communication request. Check to ensure cabling is correct and not defective. The peripheral device or handheld programmer could be defective.
E4** NO PROGRAM	A syntax error exists in the application program. The most common is a missing END statement. Run AUX21 to determine which one of the E4** series of errors is being flagged. SP52 will be on and the error code will be stored in V7755.
E401 MISSING END STATEMENT	All application programs must terminate with an END statement. Enter the END statement in appropriate location in your program. SP52 will be on and the error code will be stored in V7755.
E402 MISSING LBL	A MOVMC or LDLBL instruction was used without the appropriate label. Refer to Chapter 5 for details on these instructions. SP52 will be on and the error code will be stored in V7755.
E403 MISSING RET	A subroutine in the program does not end with the RET instruction. SP52 will be on and the error code will be stored in V7755.
E404 MISSING FOR	A NEXT instruction does not have the corresponding FOR instruction. SP52 will be on and the error code will be stored in V7755.
E405 MISSING NEXT	A FOR instruction does not have the corresponding NEXT instruction. SP52 will be on and the error code will be stored in V7755.
E406 MISSING IRT	An interrupt routine in the program does not end with the IRT instruction. SP52 will be on and the error code will be stored in V7755.
E412 SBR/LBL>64	There is greater than 64 SBR or DLBL instructions in the program. This error is also returned if there are greater than 2 INT instructions used in the program. SP52 will be on and the error code will be stored in V7755.
E421 DUPLICATE STAGE REFERENCE	Two or more SG or ISG labels exist in the application program with the same number. A unique number must be allowed for each Stage and Initial Stage. SP52 will be on and the error code will be stored in V7755.
E422 DUPLICATE LBL REFERENCE	Two or more LBL instructions exist in the application program with the same number. A unique number must be allowed for each and label. SP52 will be on and the error code will be stored in V7755.
E423 NESTED LOOPS	Nested loops (programming one FOR/NEXT loop inside of another) are not allowed. SP52 will be on and the error code will be stored in V7755.
E431 INVALID ISG/SG ADDRESS	An ISG or SG instruction must not be placed after the end statement (such as inside a subroutine). SP52 will be on and the error code will be stored in V7755.

DL05 Error Code	Description
E433 INVALID SBR ADDRESS	An SBR must be programmed after the end statement, not in the main body of the program or in an interrupt routine. SP52 will be on and the error code will be stored in V7755.
E434 INVALID RTC ADDRESS	An RTC must be programmed after the end statement, not in the main body of the program or in an interrupt routine. SP52 will be on and the error code will be stored in V7755.
E435 INVALID RT ADDRESS	An RT must be programmed after the end statement, not in the main body of the program or in an interrupt routine. SP52 will be on and the error code will be stored in V7755.
E436 INVALID INT ADDRESS	An INT must be programmed after the end statement, not in the main body of the program. SP52 will be on and the error code will be stored in V7755.
E437 INVALID IRTC ADDRESS	An IRTC must be programmed after the end statement, not in the main body of the program. SP52 will be on and the error code will be stored in V7755.
E438 INVALID IRT ADDRESS	An IRT must be programmed after the end statement, not in the main body of the program. SP52 will be on and the error code will be stored in V7755.
E440 INVALID DATA ADDRESS	Either the DLBL instruction has been programmed in the main program area (not after the END statement), or the DLBL instruction is on a rung containing input contact(s).
E441 ACON/NCON	An ACON or NCON must be programmed after the end statement, not in the main body of the program. SP52 will be on and the error code will be stored in V7755.
E451 BAD MLS/MLR	MLS instructions must be numbered in ascending order from top to bottom.
E453 MISSING T/C	A timer or counter contact is being used where the associated timer or counter does not exist.
E454 BAD TMRA	One of the contacts is missing from a TMRA instruction.
E455 BAD CNT	One of the contacts is missing from a CNT or UDC instruction.
E456 BAD SR	One of the contacts is missing from the SR instruction.

DL05 Error Code	Description
E461 STACK OVERFLOW	More than nine levels of logic have been stored on the stack. Check the use of OR STR and AND STR instructions.
E462 STACK UNDERFLOW	An unmatched number of logic levels have been stored on the stack. Ensure the number of AND STR and OR STR instructions match the number of STR instructions.
E463 LOGIC ERROR	A STR instruction was not used to begin a rung of ladder logic.
E464 MISSING CKT	A rung of ladder logic is not terminated properly.
E471 DUPLICATE COIL REFERENCE	Two or more OUT instructions reference the same I/O point.
E472 DUPLICATE TMR REFERENCE	Two or more TMR instructions reference the same number.
E473 DUPLICATE CNT REFERENCE	Two or more CNT instructions reference the same number.
E499 PRINT INSTRUCTION	Invalid PRINT instruct usage. Quotations and/or spaces were not entered or entered incorrectly.

DL05 Error Code	Description
E501 BAD ENTRY	An invalid keystroke or series of keystrokes was entered into the handheld programmer.
E502 BAD ADDRESS	An invalid or out of range address was entered into the handheld programmer.
E503 BAD COMMAND	An invalid command was entered into the handheld programmer.
E504 BAD REF/VAL	An invalid value or reference number was entered with an instruction.
E505 INVALID INSTRUCTION	An invalid instruction was entered into the handheld programmer or a program which includes an instruction requiring a Memory Cartridge (D0-01MC) to be installed in the DL05, but was placed in RUN without the MC.
E506 INVALID OPERATION	An invalid operation was attempted by the handheld programmer.
E520 BAD OP–RUN	An operation which is invalid in the RUN mode was attempted by the handheld programmer.
E521 BAD OP–TRUN	An operation which is invalid in the TEST RUN mode was attempted by the handheld programmer.
E523 BAD OP–TPGM	An operation which is invalid in the TEST PROGRAM mode was attempted by the handheld programmer.
E524 BAD OP–PGM	An operation which is invalid in the PROGRAM mode was attempted by the handheld programmer.
E525 MODE SWITCH	An operation was attempted by the handheld programmer while the CPU mode switch was in a position other than the TERM position.
E526 OFF LINE	The handheld programmer is in the OFFLINE mode. To change to the ONLINE mode use the MODE key.
E527 ON LINE	The handheld programmer is in the ON LINE mode. To change to the OFF LINE mode use the MODE key.
E528 CPU MODE	The operation attempted is not allowed during a Run Time Edit.
E540 CPU LOCKED	The CPU has been password locked. To unlock the CPU use AUX82 with the password.
E541 WRONG PASSWORD	The password used to unlock the CPU with AUX82 was incorrect.
E542 PASSWORD RESET	The CPU powered up with an invalid password and reset the password to 00000000. A password may be re-entered using AUX81.
E601 MEMORY FULL	Attempted to enter an instruction which required more memory than is available in the CPU.
E602 INSTRUCTION MISSING	A search function was performed and the instruction was not found.

DL05 Error Code	Description
E603 DATA MISSING	A search function was performed and the data was not found.
E604 REFERENCE MISSING	A search function was performed and the reference was not found.
E620 OUT OF MEMORY	An attempt to transfer more data between the CPU and handheld programmer than the receiving device can hold.
E621 EEPROM NOT BLANK	An attempt to write to a non-blank EEPROM in the handheld programmer was made. Erase the EEPROM and then retry the write.
E622 NO HPP EEPROM	A data transfer was attempted with no EEPROM (or possibly a faulty EEPROM) installed in the handheld programmer.
E623 SYSTEM EEPROM	A function was requested with an EEPROM in the handheld programmer which contains system information only.
E624 V-MEMORY ONLY	A function was requested with an EEPROM in the handheld programmer which contains V-memory data only.
E625 PROGRAM ONLY	A function was requested with an EEPROM in the handheld programmer which contains program data only.
E626 PROM MC	An attempt to transfer data from a tape to a UVPROM Memory Cartridge. This transfer must be made using a CMOS RAM Cartridge.
E627 BAD WRITE	An attempt to write to a write-protected or faulty EEPROM in the handheld programmer was made. Check the write protect jumper and replace the EEPROM if necessary.
E628 EEPROM TYPE ERROR	The wrong size EEPROM is being used in the handheld programmer. This error occurs when the program size is larger than what the HPP can hold.
E640 COMPARE ERROR	A compare between the EEPROM handheld programmer and the CPU was found to be in error.
E641 VOLUME LEVEL	The volume level of the cassette player is not set properly. Adjust the volume and retry the operation.
E642 CHECKSUM ERROR	An error was detected while data was being transferred to the handheld programmer's Memory Cartridge. Check cabling and retry the operation.
E650 HPP SYSTEM ERROR	A system error has occurred in the handheld programmer. Power cycle the handheld programmer. If the error returns replace the handheld programmer.
E651 HPP ROM ERROR	A ROM error has occurred in the handheld programmer. Power cycle the handheld programmer. If the error returns replace the handheld programmer.
E652 HPP RAM ERROR	A RAM error has occurred in the handheld programmer. Power cycle the handheld programmer. If the error returns replace the handheld programmer.

Notes

Instruction Execution Times

Appendix C

In This Appendix:

Introduction C–2
Instruction Execution Times C–3

C

Introduction

This appendix contains several tables that provide the instruction execution times for DL05 Micro PLCs. Many of the execution times depend on the type of data used with the instruction. Registers may be classified into the following types:

- Data (word) Registers
- Bit Registers

V-memory Data Registers

Some V-memory locations are considered data registers, such as timer or counter current values. Standard user V-memory is classified as a V-memory data register. Note that you can load a bit pattern into these types of registers, even though their primary use is for data registers. The following locations are data registers:

Data Registers	DL05
Timer Current Values	V0 - V177
Counter Current Values	V1000 - V1177
User Data Words	V1200 - V7377 V7400 - V7577

V-memory Bit Registers

You may recall that some of the discrete points such as X, Y, C, etc. are automatically mapped into V-memory. The following bit registers contain this data:

How to Read the Tables

Bit Registers	DL05
Input Points (X)	V40400 - V40417
Output Points (Y)	V40500 - V40517
Control Relays (C)	V40600 - V40637
Stages (S)	V41000 - V41017
Timer status Bits	V41100 - V41107
Counter status Bits	V41140 - V41147
Special Relays (SP)	V41200 - V41237

Some instructions can have more than one parameter. For example, the SET instruction shown in the ladder program to the right can set a single point or a range of points.

In these cases, execution times depend on the amount and type of parameters. The execution time tables list execution times for both situations, as shown below:

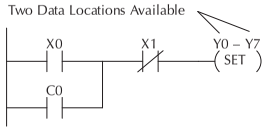

SET	1st #: X, Y, C, 2nd #: X, Y, C, S (N pt)	9.2 µs 9.6 µs + 0.9 V x N
RST	1st #: X, Y, C, 2nd #: X, Y, C, S (N pt)	9.2 µs 9.6 µs + 0.9 V x N

Execution depends on numbers of locations and types of data used

C

Instruction Execution Times

Boolean Instructions

Boolean Instructions		DL05	
Instruction	Legal Data Types	Execute	Not Execute
STR	X, Y, C, T, CT, S, SP	2.0 µs	2.0 µs
STRN	X, Y, C, T, CT, S, SP	2.2 µs	2.2 µs
OR	X, Y, C, T, CT, S, SP	2.5 µs	2.4 µs
ORN	X, Y, C, T, CT, S, SP	2.5 µs	2.4 µs
AND	X, Y, C, T, CT, S, SP	2.2 µs	2.1 µs
ANDN	X, Y, C, T, CT, S, SP	2.3 µs	2.3 µs
ANDSTR	None	1.2 µs	1.2 µs
ORSTR	None	1.2 µs	1.2 µs
OUT	X, Y, C	6.8 µs	7.0 µs
OROUT	X, Y, C	6.7 µs	7.2 µs
NOT	None	1.6 µs	1.6 µs
PD	X, Y, C	55.0 µs	55.0 µs
STRPD	X, Y, C, T, CT, S, SP	20.2 µs	12.9 µs
STRND	X, Y, C, T, CT, S, SP	20.1 µs	13.0 µs
ORPD	X, Y, C, T, CT, S, SP	20.0 µs	12.6 µs
ORND	X, Y, C, T, CT, S, SP	19.8 µs	12.7 µs
ANDPD	X, Y, C, T, CT, S, SP	20.0 µs	12.6 µs
ANDND	X, Y, C, T, CT, S, SP	19.9 µs	12.8 µs
SET	1st #: X, Y, C, S, 2nd #: X, Y, C, S (N pt)	42.0 µs 32.4 µs + 25.6 µs x N	3.7 µs 4.7 µs
RST	1st #: X, Y, C,S 2nd #: X, Y, C,S (N pt)	44.5µs 33.8 µs + 25.7 µs x N	3.9 µs 4.8 µs
	1st #: T, CT 2nd #: T, CT (N pt)	73.0 µs 80.9 µs + 2.6 µs x N	3.7 µs 4.8 µs
PAUSE	1wd: Y 2wd: Y (N pt)	31.6 µs 48.4 µs + 12.1 µs x N	31.1 µs 48.8 µs

C

Comparative Boolean Instructions

Comparative Boolean Instructions			DL05	
Instruction	Legal Data Types		Execute	Not Execute
	1st	*2nd*		
STRE	V: Data Reg.	V:Data Reg.	16.5 µs	16.4 µs
		V:Bit Reg	16.5 µs	16.4 µs
		K:Constant	11.9 µs	11.7 µs
		P:Indir. (Data)	62.9 µs	62.8 µs
		P:Indir. (Bit)	62.9 µs	62.8 µs
	V: Bit Reg	V:Data Reg	16.5 µs	16.4 µs
		V:Bit Reg	16.5 µs	16.4 µs
		K:Constant	11.9 µs	11.7 µs
		P:Indir. (Data)	62.9 µs	62.8 µs
		P:Indir. (Bit)	62.9 µs	62.8 µs
	P: Indir. (Data)	V:Data Reg	63.1 µs	63.0 µs
		V:Bit Reg	63.1 µs	63.0 µs
		K:Constant	57.2 µs	57.1 µs
		P:Indir. (Data)	106.8 µs	106.6 µs
		P:Indir. (Bit)	106.8 µs	106.6 µs
	P: Indir. (Bit)	V:Data Reg	63.1 µs	63.0 µs
		V:Bit Reg	63.1 µs	63.0 µs
		K:Constant	57.2 µs	57.1 µs
		P:Indir. (Data)	106.8 µs	106.6 µs
		P:Indir. (Bit)	106.8 µs	106.6 µs
STRNE	*1st*	*2nd*		
	V: Data Reg	V:Data Reg	16.6 µs	16.7 µs
		V:Bit Reg	16.6 µs	16.7 µs
		K:Constant	12.0 µs	12.1 µs
		P:Indir. (Data)	63.0 µs	63.1 µs
		P:Indir. (Bit)	63.0 µs	63.1 µs
	V: Bit Reg	V:Data Reg	16.6 µs	16.7 µs
		V:Bit Reg	16.6 µs	16.7 µs
		K:Constant	12.0 µs	12.1 µs
		P:Indir. (Data)	63.0 µs	63.1 µs
		P:Indir. (Bit)	63.0 µs	63.1 µs
	P: Indir. (Data)	V:Data Reg	63.3 µs	63.4 µs
		V:Bit Reg	63.3 µs	63.4 µs
		K:Constant	57.4 µs	57.5 µs
		P:Indir. (Data)	106.9 µs	107.0 µs
		P:Indir. (Bit)	106.9 µs	107.0 µs
	P: Indir. (Bit)	V:Data Reg	63.3 µs	63.4 µs
		V:Bit Reg	63.3 µs	63.4 µs
		K:Constant	57.4 µs	57.5 µs
		P:Indir. (Data)	106.9 µs	107.0 µs
		P:Indir. (Bit)	106.9 µs	107.0 µs

C

Comparative Boolean Instructions (cont'd)			DL05	
Instruction	Legal Data Types		Execute	Not Execute
	1st	*2nd*		
ORE	V: Data Reg	V:Data Reg	16.1 µs	16.0 µs
		V:Bit Reg	16.1 µs	16.0 µs
		K:Constant	11.3 µs	11.2 µs
		P:Indir. (Data)	62.4 µs	62.2 µs
		P:Indir. (Bit)	62.4 µs	62.2 µs
	V: Bit Reg	V:Data Reg.	16.1 µs	16.0 µs
		V:Bit Reg	16.1 µs	16.0 µs
		K:Constant	11.3 µs	11.2 µs
		P:Indir. (Data)	62.4 µs	62.2 µs
		P:Indir. (Bit)	62.4 µs	62.2 µs
	P: Indir. (Data)	V:Data Reg	62.6 µs	62.5 µs
		V:Bit Reg	62.6 µs	62.5 µs
		K:Constant	56.8 µs	56.8 µs
		P:Indir. (Data)	106.4 µs	106.2 µs
		P:Indir. (Bit)	106.4 µs	106.2 µs
	P: Indir. (Bit)	V:Data Reg	62.6 µs	62.5 µs
		V:Bit Reg	62.6 µs	62.5 µs
		K:Constant	56.8 µs	56.8 µs
		P:Indir. (Data)	106.4 µs	106.2 µs
		P:Indir. (Bit)	106.4 µs	106.2 µs
ORNE	*1st*	*2nd*		
	V: Data Reg.	V:Data Reg.	16.3 µs	16.3 µs
		V:Bit Reg.	16.3 µs	16.3 µs
		K:Constant	11.5 µs	11.6 µs
		P:Indir. (Data)	62.5 µs	62.6 µs
		P:Indir. (Bit)	62.5 µs	62.6 µs
	V: Bit Reg.	V:Data Reg	16.3 µs	16.3 µs
		V:Bit Reg.	16.3 µs	16.3 µs
		K:Constant	11.5 µs	11.6 µs
		P:Indir. (Data)	62.5 µs	62.6 µs
		P:Indir. (Bit)	62.5 µs	62.6 µs
	P: Indir. (Data)	V:Data Reg.	62.7 µs	62.9 µs
		V:Bit Reg.	62.7 µs	62.9 µs
		K:Constant	57.0 µs	57.1 µs
		P:Indir. (Data)	106.5 µs	106.6 µs
		P:Indir. (Bit)	106.5 µs	106.6 µs
	P: Indir. (Bit)	V:Data Reg.	62.7 µs	62.9 µs
		V:Bit Reg.	62.7 µs	62.9 µs
		K:Constant	57.0 µs	57.1 µs
		P:Indir. (Data)	106.5 µs	106.6 µs
		P:Indir. (Bit)	106.5 µs	106.6 µs

C

Comparative Boolean Instructions (cont'd)			DL05	
Instruction	Legal Data Types		Execute	Not Execute
	1st	*2nd*		
ANDE	V: Data Reg.	V:Data Reg	16.1 µs	16.0 µs
		V:Bit Reg	16.1 µs	16.0 µs
		K:Constant	11.3 µs	11.3 µs
		P:Indir. (Data)	62.4 µs	62.2 µs
		P:Indir. (Bit)	62.4 µs	62.2 µs
	V: Bit Reg.	V:Data Reg	16.1 µs	16.0 µs
		V:Bit Reg	16.1 µs	16.0 µs
		K:Constant	11.3 µs	11.3 µs
		P:Indir. (Data)	62.4 µs	62.2 µs
		P:Indir. (Bit)	62.4 µs	62.2 µs
	P: Indir. (Data)	V:Data Reg	62.6 µs	62.5 µs
		V:Bit Reg	62.6 µs	62.5 µs
		K:Constant	56.9 µs	56.7 µs
		P:Indir. (Data)	106.4 µs	106.2 µs
		P:Indir. (Bit)	106.4 µs	106.2 µs
	P: Indir. (Bit)	V:Data Reg	62.6 µs	62.5 µs
		V:Bit Reg	62.6 µs	62.5 µs
		K:Constant	56.9 µs	56.7 µs
		P:Indir. (Data)	106.4 µs	106.2 µs
		P:Indir. (Bit)	106.4 µs	106.2 µs
	1st	*2nd*		
ANDNE	V: Data Reg.	V:Data Reg.	16.2µs	16.4 µs
		V:Bit Reg.	16.2µs	16.4 µs
		K:Constant	11.5 µs	11.6 µs
		P:Indir. (Data)	62.5 µs	62.7 µs
		P:Indir. (Bit)	62.5 µs	62.7 µs
	V: Bit Reg.	V:Data Reg.	16.2 µs	16.4 µs
		V:Bit Reg	16.2 µs	16.4 µs
		K:Constant	11.5 µs	11.6 µs
		P:Indir. (Data)	62.5 µs	62.7 µs
		P:Indir. (Bit)	62.5 µs	62.7 µs
	P: Indir. (Data)	V:Data Reg.	62.7 µs	62.85 µs
		V:Bit Reg.	62.7 µs	62.85 µs
		K:Constant	57.0 µs	57.1 µs
		P:Indir. (Data)	106.5 µs	106.6 µs
		P:Indir. (Bit)	106.5 µs	106.6 µs
	P: Indir. (Bit)	V:Data Reg.	62.7 µs	62.85 µs
		V:Bit Reg.	62.7 µs	62.85 µs
		K:Constant	57.0 µs	57.10 µs
		P:Indir. (Data)	106.5 µs	106.6 µs
		P:Indir. (Bit)	106.5 µs	106.6 µs

C

Comparative Boolean Instructions (cont'd)			DL05	
Instruction	Legal Data Types		Execute	Not Execute
	1st	*2nd*		
STR	V: T, CT	V:Data Reg.	16.5 µs	16.4 µs
		V:Bit Reg	16.5 µs	16.4 µs
		K:Constant	11.9 µs	11.7 µs
		P:Indir. (Data)	62.9 µs	62.7 µs
		P:Indir. (Bit)	62.9 µs	62.7 µs
	V Data Reg	V:Data Reg.	16.5 µs	16.4 µs
		V:Bit Reg	16.5 µs	16.4 µs
		K:Constant	11.9 µs	11.7 µs
		P:Indir. (Data)	62.9 µs	62.7 µs
		P:Indir. (Bit)	62.9 µs	62.7 µs
	V: Bit Reg.	V:Data Reg.	16.5 µs	16.4 µs
		V:Bit Reg	16.5 µs	16.4 µs
		K:Constant	11.9 µs	11.7 µs
		P:Indir. (Data)	62.9 µs	62.7 µs
		P:Indir. (Bit)	62.9 µs	62.7 µs
	P: Indir. (Data)	V:Data Reg.	63.1 µs	63.0 µs
		V:Bit Reg	63.1 µs	63.0 µs
		K:Constant	56.2µs	57.1 µs
		P:Indir. (Data)	106.8 µs	106.6 µs
		P:Indir. (Bit)	106.8 µs	106.6 µs
	P: Indir. (Bit)	V:Data Reg	63.1 µs	63.0 µs
		V:Bit Reg	63.1 µs	63.0 µs
		K:Constant	56.2 µs	57.1 µs
		P:Indir. (Data)	106.8 µs	106.6 µs
		P:Indir. (Bit)	106.8 µs	106.6 µs
	1st	*2nd*		
STRN	V: T, CT	V:Data Reg.	16.6 µs	16.7 µs
		V:Bit Reg.	16.6 µs	16.7 µs
		K:Constant	12.0 µs	12.1 µs
		P:Indir. (Data)	63.0 µs	63.1 µs
		P:Indir. (Bit)	63.0 µs	63.1 µs
	V: Data Reg.	V:Data Reg.	16.6 µs	16.7 µs
		V:Bit Reg	16.6 µs	16.7 µs
		K:Constant	12.0 µs	12.1 µs
		P:Indir. (Data)	63.0 µs	63.1 µs
		P:Indir. (Bit	63.0 µs	63.1 µs
	V: Bit Reg	V:Data Reg.	16.6 µs	16.7 µs
		V:Bit Reg.	16.6 µs	16.7 µs
		K:Constant	12.0 µs	12.1 µs
		P:Indir. (Data)	63.0 µs	63.1 µs
		P:Indir. (Bit)	63.0 µs	63.1 µs
	P: Indir. (Data)	V:Data Reg.	63.2 µs	63.4 µs
		V:Bit Reg.	63.2 µs	63.4 µs
		K:Constant	57.4 µs	57.5 µs
		P:Indir. (Data)	106.9 µs	107.0 µs
		P:Indir. (Bit)	106.9 µs	107.0 µs
	P: Indir. (Bit)	V:Data Reg.	63.2 µs	63.4 µs
		V:Bit Reg.	63.2 µs	63.4 µs
		K:Constant	57.4 µs	57.5 µs
		P:Indir. (Data)	106.9 µs	107.0 µs
		P:Indir. (Bit)	106.9 µs	107.0 µs

C

Comparative Boolean Instructions (cont'd)			DL05	
Instruction	Legal Data Types		Execute	Not Execute
	1st	*2nd*		
OR	V: T, CT	V Data Reg	16.1 µs	16.0 µs
		V:Bit Reg	16.1 µs	16.0 µs
		K:Constant	11.3 µs	11.2 µs
		P:Indir. (Data)	62.4 µs	62.2 µs
		P:Indir. (Bit)	62.4 µs	62.2 µs
	V: Data Reg.	V:Data Reg.	16.1 µs	16.0 µs
		V:Bit Reg	16.1 µs	16.0 µs
		K:Constant	11.3 µs	11.3 µs
		P:Indir. (Data)	62.4 µs	62.2 µs
		P:Indir. (Bit)	62.4 µs	62.2 µs
	V: Bit Reg.	V:Data Reg.	16.1 µs	16.0 µs
		V:Bit Reg	16.1 µs	16.0 µs
		K:Constant	11.3 µs	11.2 µs
		P:Indir. (Data)	62.4 µs	62.2 µs
		P:Indir. (Bit)	62.4 µs	62.2 µs
	P: Indir. (Data)	V:Data Reg	62.6 µs	62.5 µs
		V:Bit Reg	62.6 µs	62.5 µs
		K:Constant	56.8 µs	56.7 µs
		P:Indir. (Data)	106.4 µs	106.2 µs
		P:Indir. (Bit)	106.4 µs	106.2 µs
	P: Indir. (Bit)	V:Data Reg	62.6 µs	62.5 µs
		V:Bit Reg	62.6 µs	62.5 µs
		K:Constant	56.8 µs	56.7 µs
		P:Indir. (Data	106.4 µs	106.2 µs
		P:Indir. (Bit)	106.4 µs	106.2 µs
	1st	*2nd*		
ORN	V: T, CT	V:Data Reg.	16.2 µs	16.3 µs
		V:Bit Reg	16.2 µs	16.3 µs
		K:Constant	11.5 µs	11.6 µs
		P:Indir. (Data	62.5 µs	62.6 µs
		P:Indir. (Bit)	62.5 µs	62.6 µs
	V: Data Reg	V:Data Reg	16.2 µs	16.3 µs
		V:Bit Reg	16.2 µs	16.3 µs
		K:Constant	11.5 µs	11.6 µs
		P:Indir. (Data)	62.5 µs	62.6 µs
		P:Indir. (Bit)	62.5 µs	62.6 µs
	V: Bit Reg.	V:Data Reg.	16.2 µs	16.3 µs
		V:Bit Reg.	16.2 µs	16.3 µs
		K:Constant	11.5 µs	11.6 µs
		P:Indir. (Data)	62.5 µs	62.6 µs
		P:Indir. (Bit)	62.5 µs	62.6 µs
	P: Indir. (Data)	V:Data Reg.	62.7 µs	62.9 µs
		V:Bit Reg.	62.7 µs	62.9 µs
		K:Constant	57.0 µs	57.1 µs
		P:Indir. (Data)	106.5 µs	106.6 µs
		P:Indir. (Bit)	106.5 µs	106.6 µs
	P: Indir. (Bit)	V:Data Reg.	62.7 µs	62.9 µs
		V:Bit Reg.	62.7 µs	62.9 µs
		K:Constant	57.0 µs	57.1 µs
		P:Indir. (Data)	106.5 µs	106.6 µs
		P:Indir. (Bit)	106.5 µs	106.6 µs

C

Comparative Boolean Instructions (cont'd)			DL05	
Instruction	Legal Data Types		Execute	Not Execute
	1st	*2nd*		
AND	V: T, CT	V Data Reg.	16.1 µs	16.0 µs
		V:Bit Reg	16.1 µs	16.0 µs
		K:Constant	11.3 µs	11.2 µs
		P:Indir. (Data)	62.4 µs	62.2 µs
		P:Indir. (Bit)	62.4 µs	62.2 µs
	V: Data Reg.	V:Data Reg	16.1 µs	16.0 µs
		V:Bit Reg	16.1 µs	16.0 µs
		K:Constant	11.3 µs	11.2 µs
		P:Indir. (Data)	62.4 µs	62.2 µs
		P:Indir. (Bit)	62.4 µs	62.2 µs
	V: Bit Reg.	V:Data Reg.	16.1 µs	16.0 µs
		V:Bit Reg	16.1 µs	16.0 µs
		K:Constant	11.3 µs	11.2 µs
		P:Indir. (Data)	62.4 µs	62.2 µs
		P:Indir. (Bit)	62.4 µs	62.2 µs
	P: Indir. (Data)	V:Data Reg	62.6 µs	62.5 µs
		V:Bit Reg	62.6 µs	62.5 µs
		K:Constant	56.8 µs	56.7 µs
		P:Indir. (Data)	106.4 µs	106.2 µs
		P:Indir. (Bit)	106.4 µs	106.2 µs
	P: Indir. (Bit)	V:Data Reg	62.6 µs	62.5 µs
		V:Bit Reg	62.6 µs	62.5 µs
		K:Constant	56.8 µs	56.7 µs
		P:Indir. (Data)	106.4 µs	106.2 µs
		P:Indir. (Bit)	106.4 µs	106.2 µs
	1st	*2nd*		
ANDN	V: T, CT	V:Data Reg.	16.2 µs	16.4 µs
		V:Bit Reg.	16.2 µs	16.4 µs
		K:Constant	11.5 µs	11.6 µs
		P:Indir. (Data)	62.5 µs	62.6 µs
		P:Indir. (Bit)	62.5 µs	62.6 µs
	V: Data Reg.	V:Data Reg	16.2 µs	16.4 µs
		V:Bit Reg.	16.2 µs	16.4 µs
		K:Constant	11.5 µs	11.6 µs
		P:Indir. (Data)	62.5 µs	62.6 µs
		P:Indir. (Bit)	62.5 µs	62.6 µs
	V: Bit Reg.	V:Data Reg.	16.2 µs	16.4 µs
		V:Bit Reg.	16.2 µs	16.4 µs
		K:Constant	11.5 µs	11.6 µs
		P:Indir. (Data)	62.5 µs	62.6 µs
		P:Indir. (Bit)	62.5 µs	62.6 µs
	P: Indir. (Data)	V:Data Reg.	62.8 µs	62.9 µs
		V:Bit Reg.	62.8 µs	62.9 µs
		K:Constant	57.0 µs	57.1 µs
		P:Indir. (Data)	106.5 µs	106.6 µs
		P:Indir. (Bit)	106.5 µs	106.6 µs
	P: Indir. (Bit)	V:Data Reg.	62.8 µs	62.9 µs
		V:Bit Reg.	62.8 µs	62.9 µs
		K:Constant	57.0 µs	57.1 µs
		P:Indir. (Data)	106.5 µs	106.6 µs
		P:Indir. (Bit)	106.5 µs	106.6 µs

C

Immediate Instructions

Immediate Instructions		DL05	
Instruction	Legal Data Types	Execute	Not Execute
STRI	X	51.87 µs	0.0
STRNI	X	52.0 µs	0.0
ORI	X	51.87 µs	0.0
ORNI	X	51.9 µs	0.0
ANDI	X	51.87 µs	0.0
ANDNI	X	51.9 µs	0.0
OUTI	Y	96.0 µs	0.0
OROUTI	Y	105.0 µs	0.0
SETI	1st #: Y	84.0 µs	0.0
	2nd #: Y (Npt)	147.4 µs + 5 µs x N	0.0
RSTI	1st #: Y	84.0 µs	0.0
	2nd #: Y (Npt)	147.5 µs + 5 µs x N	0.0

Timer, Counter and Shift Register

Timer, Counter, and Shift Register			DL05	
Instruction	Legal Data Types		Execute	Not Execute
TMR	*1st*	*2nd*		
	T	V:Data Reg.	74.23 µs	70.5 µs
		V:Bit Reg.	74.23 µs	70.5 µs
		K:Constant	68.83 µs	64.7 µs
		P:Indir. (Data)	123.0 µs	119.3 µs
		P:Indir. (Bit)	123.0 µs	119.3 µs
TMRF	*1st*	*2nd*		
	T	V:Data Reg.	145.23 µs	70.5 µs
		V:Bit Reg.	145.23 µs	70.5 µs
		K:Constant	109.6 µs	64.5 µs
		P:Indir. (Data)	194.0 µs	119.3 µs
		P:Indir. (Bit)	194.0 µs	119.3 µs
TMRA	*1st*	*2nd*		
	T	V:Data Reg.	118.87 µs	73.4 µs
		V:Bit Reg.	118.87 µs	73.4 µs
		K:Constant	111.33 µs	66.75 µs
		P:Indir. (Data)	166.9 µs	128.1 µs
		P:Indir. (Bit)	166.9 µs	128.1 µs
TMRAF	*1st*	*2nd*		
	T	V:Data Reg.	148.53 µs	73.4 µs
		V:Bit Reg.	148.53 µs	73.4 µs
		K:Constant	142.30 µs	66.7 µs
		P:Indir. (Data)	197.3 µs	128.15 µs
		P:Indir. (Bit)	197.3 µs	128.15 µs
CNT	*1st*	*2nd*		
	T	V:Data Reg.	102.53 µs	81.5 µs
		V:Bit Reg.	102.53 µs	81.5 µs
		K:Constant	97.1 µs	76.1 µs
		P:Indir. (Data)	151.4 µs	130.4 µs
		P:Indir. (Bit)	151.4 µs	130.4 µs

C

Timer, Counter, and Shift Register, (cont,d)			DL05	
Instruction	Legal Data Types		Execute	Not Execute
SGCNT	*1st*	*2nd*		
	CT	V:Data Reg.	100.0 µs	92.4 µs
		V:Bit Reg.	100.0 µs	92.4 µs
		K:Constant	64.6 µs	87.0 µs
		P:Indir. (Data)	148.90 µs	141.30 µs
		P:Indir. (Bit)	148.90 µs	141.30 µs
UDC	*1st*	*2nd*		
	CT	V:Data Reg.	139.87 µs	120.20 µs
		V:Bit Reg.	139.87 µs	120.20 µs
		K:Constant	133.73 µs	114.15 µs
		P:Indir. (Data)	188.80 µs	169.10 µs
		P:Indir. (Bit)	188.80 µs	169.10 µs
SR	C (N points to shift)		49.0 µs + 4.9 µs x N	39.15 µs

Accumulator Data Instructions

Accumulator / Stack Load and Output Data Instructions			DL05	
Instruction	Legal Data Types		Execute	Not Execute
LD		V:Data Reg.	47.0 µs	3.9 µs
		V:Bit Reg.	47.0 µs	3.9 µs
		K:Constant	41.37 µs	3.3 µs
		P:Indir. (Data)	93.3 µs	3.2 µs
		P:Indir. (Bit)	93.3 µs	3.2 µs
LDD		V:Data Reg.	46.6 µs	3.35 µs
		V:Bit Reg.	46.6 µs	3.35 µs
		K:Constant	41.5 µs	3.35 µs
		P:Indir. (Data)	93.8 µs	3.4 µs
		P:Indir. (Bit)	93.8 µs	3.4 µs
LDF	*1st*	*2nd*		
	X, Y, C, S,T, CT,SP	K:Constant (N pt)	78.0 µs + 3.3 µs x N	4.4 µs
LDA	O: (Octal constant for address)		41.37 µs	3.3 µs
OUT		V:Data Reg.	14.4 µs	3.2 µs
		V:Bit Reg.	14.4 µs	3.2 µs
		P:Indir. (Data)	61.6 µs	3.3 µs
		P:Indir. (Bit)	61.6 µs	3.3 µs
OUTD		V:Data Reg.	17.3 µs	3.4 µs
		V:Bit Reg.	17.3 µs	3.4 µs
		P:Indir. (Data)	65.27 µs	3.35 µs
		P:Indir. (Bit)	65.27 µs	3.35 µs
OUTF	*1st*	*2nd*		
	X, Y, C	K:Constant (N pt)	49.8 µs + 5.4 µs x N	4.3 µs
POP	None		42.3 µs	2.2 µs

C

Logical Instructions

Logical (Accumulator) Instructions		DL05	
Instruction	Legal Data Types	Execute	Not Execute
AND	V:Data Reg. V:Bit Reg. P:Indir. (Data) P:Indir. (Bit)	23.63 µs 23.63 µs 68.1 µs 68.1 µs	3.4 µs 3.4 µs 3.4 µs 3.4 µs
ANDD	V:Data Reg. V:Bit Reg. K:Constant P:Indir. (Data) P:Indir. (Bit)	23.4 µs 23.4 µs 19.27 µs 70.0 µs 70.0 µs	3.25 µs 3.25 µs 3.35 µs 3.4 µs 3.4 µs
OR	V:Data Reg. V:Bit Reg. P:Indir. (Data) P:Indir. (Bit)	23.50 µs 23.50 µs 69.77 µs 69.77 µs	3.25 µs 3.25 µs 3.2 µs 3.2 µs
ORD	V:Data Reg. V:Bit Reg. K:Constant P:Indir. (Data) P:Indir. (Bit)	23.9 µs 23.9 µs 19.13 µs 69.8 µs 69.8 µs	3.35 µs 3.35 µs 3.3 µs 3.25 µs 3.25 µs
XOR	V:Data Reg V:Bit Reg. P:Indir. (Data) P:Indir. (Bit)	23.6 µs 23.6 µs 69.83 µs 69.83 µs	3.3 µs 3.3 µs 3.4 µs 3.4 µs
XORD	V:Data Reg. V:Bit Reg. K:Constant P:Indir. (Data) P:Indir. (Bit)	23.4 µs 23.4 µs 19.27 µs 71.0 µs 71.0 µs	3.25 µs 3.25 µs 3.4 µs 3.4 µs 3.4 µs
CMP	V:Data Reg. V:Bit Reg. P:Indir. (Data) P:Indir. (Bit)	22.5 µs 22.5 µs 68.67 µs 68.67 µs	3.3 µs 3.3 µs 3.2 µs 3.2 µs
CMPD	V:Data Reg. V:Bit Reg. K:Constant P:Indir. (Data) P:Indir. (Bit)	37.9 µs 37.7 µs 33.4 µs 84.23 µs 84.23 µs	3.4 µs 3.4 µs 3.25 µs 3.3 µs 3.3 µs

Math Instructions

Math Instructions (Accumulator)		DL05	
Instruction	Legal Data Types	Execute	Not Execute
ADD	V:Data Reg. V:Bit Reg. P:Indir. (Data) P:Indir. (Bit)	168.4 µs 168.4 µs 213.08 µs 213.08 µs	3.9 µs 3.9 µs 3.9 µs 3.9 µs
ADDD	V:Data Reg. V:Bit Reg. K:Constant P:Indir. (Daa) P:Indir. (Bit)	177.3 µs 177.3 µs 151.8 µs 222.2 µs 222.2 µs	3.8 µs 3.8 µs 3.9 µs 3.8 µs 3.8 µs
SUB	V:Data Reg. V:Bit Reg P:Indir. (Data) P:Indir. (Bit)	175.3 µs 175.3 µs 219.9 µs 219.9 µs	3.9 µs 3.9 µs 3.9 µs 3.9 µs

C

Math Instructions (Accumulator) (cont'd)		DL05	
Instruction	Legal Data Types	Execute	Not Execute
SUBD	V:Data Reg. V:Bit Reg. K:Constant P:Indir. (Data) P:Indir. (Bit)	187.4 µs 187.4 µs 158.5 µs 229.1 µs 229.1 µs	3.8 µs 3.8 µs 3.8 µs 3.9 µs 3.9 µs
MUL	V:Data Reg. V:Bit Reg. K:Constant P:Indir. (Data) P:Indir. (Bit)	483.55 µs 483.55 µs 473.30 µs 542.30 µs 542.30 µs	3.8 µs 3.8 µs 3.9 µs 3.8 µs 3.8 µs
MULD	V:Data Reg. V:Bit Reg. P:Indir. (Data) P:Indir. (Bit)	1594.0 µs 1594.0 µs 1656.0 µs 1656.0 µs	3.8 µs 3.8 µs 3.8 µs 3.8 µs
DIV	V:Data Reg. V:Bit Reg K:Constant P:Indir. (Data) P:Indir. (Bit)	707.1 µs 707.1 µs 688.3 µs 751.6 µs 751.6 µs	3.9 µs 3.9 µs 3.8 µs 3.8 µs 3.8 µs
DIVD	V:Data Reg. V:Bit Reg. P:Indir. (Data) P:Indir. (Bit)	712.1 µs 712.1 µs 754.6 µs 754.6 µs	3.8 µs 3.8 µs 3.8 µs 3.8 µs
INC	V:Data Reg V:Bit Reg P:Indir. (Data) P:Indir. (Bit)	66.4 µs 66.4 µs 109.9 µs 109.9 µs	3.8 µs 3.8 µs 3.8 µs 3.8 µs
DEC	V:Data Reg. V:Bit Reg. P:Indir. (Data) P:Indir. (Bit)	68.2 µs 68.2 µs 112.7 µs 112.7 µs	3.8 µs 3.8 µs 3.8 µs 3.8 µs
ADDB	V:Data Reg. V:Bit Reg. K:Constant P:Indir. (Data) P:Indir. (Bit)	70.0 µs 70.0 µs 82.9 µs 113.9 µs 113.9 µs	3.7 µs 3.7 µs 3.8 µs 3.8 µs 3.8 µs
SUBB	V:Data Reg. V:Bit Reg. K:Constant P:Indir. (Data) P:Indir. (Bit)	70.25 µs 70.25 µs 68.3 µs 114.0 µs 114.0 µs	3.8 µs 3.8 µs 3.8 µs 3.8 µs 3.8 µs
MULB	V:Data Reg. V:Bit Reg. K:Constant P:Indir. (Data) P:Indir. (Bit)	23.9 µs 23.9 µs 20.3 µs 67.9 µs 67.9 µs	3.8 µs 3.8 µs 3.8 µs 3.8 µs 3.8 µs
DIVB	V:Data Reg. V:Bit Reg. K:Constant P:Indir. (Data) P:Indir. (Bit)	80.9 µs 80.9 µs 77.25 µs 124.9 µs 124.9 µs	3.8 µs 3.8 µs 3.8 µs 3.8 µs 3.8 µs

C

Math Instructions (Accumulator) (cont'd)		DL05	
Instruction	Legal Data Types	Execute	Not Execute
INCB	V:Data Reg. V:Bit Reg. P:Indir. (Data) P:Indir. (Bit)	23.4 µs 23.4 µs 66.5 µs 66.5 µs	3.9 µs 3.9 µs 3.8 µs 3.8 µs
DECB	V:Data Reg. V:Bit Reg. P:Indir. (Data) P:Indir. (Bit)	23.2 µs 23.2 µs 67.2 µs 67.2 µs	3.8 µs 3.8 µs 3.9 µs 3.9 µs

Bit Instructions

Bit Instructions (Accumulator)		DL05	
Instruction	Legal Data Types	Execute	Not Execute
SUM	None	26.9 µs	2.6 µs
SHFL	V:Data Reg. (N bits) V:Bit Reg. (N bits) K:Constant (N bits)	21.8 µs 21.8 µs 19.5 µs	2.1 µs 2.1 µs 2.1 µs
SHFR	V:Data Reg. (N bits) V:Bit Reg. (N bits) K:Constant (N bits)	21.5 µs 21.5 µs 19.6 µs	2.1 µs 2.1 µs 2.1 µs
ENCO	None	382.0 µs	2.7 µs
DECO	None	16.4 µs	2.7 µs

Number Conversion Instructions

Number Conversion Instructions (Accumulator)		DL05	
Instruction	Legal Data Types	Execute	Not Execute
BIN	None	159.9 µs	2.6 µs
BCD	None	175.0 µs	2.6 µs
INV	None	6.7 µs	2.6 µs
ATH	None	319.0 µs	3.7 µs
HTA	None	301.6 µs	3.9 µs
GRAY	None	213.4 µs	2.7 µs
SFLDGT	None	259.1 µs	2.7 µs

Table Instructions

Table Instructions		DL05	
Instruction	Legal Data Types	Execute	Not Execute
MOV	V: Data/Bit Reg. to Vdata/Bit Reg (N pt)	136.1 µs + 20.8 µs x N	3.25 µs
MOVMC	V: Data/Bit Reg <=> E^2 (N pt)	86.0 µs + 30.7 µs x N	0
LDLBL	K: Constant	33.2 µs	0

C

CPU Control Instructions

CPU Control Instructions		DL05	
Instruction	Legal Data Types	Execute	Not Execute
NOP	None	1.0 µs	1.0 µs
END	None	21.8 µs	0.0
STOP	None	2.6 µs	1.15 µs
RSTWDT	None	6.3 µs	2.6 µs
NOT	None	1.6 µs	1.6 µs

Program Control Instructions

Program Control Instructions		DL05	
Instruction	Legal Data Types	Execute	Not Execute
FOR	V, K	202.9 µs	15.0 µs
NEXT	None	62.27 µs	-
GTS	K: Constant	27.6 µs	15.3 µs
SBR	K: Constant	1.6 µs	0.0
RTC	None	25.7 µs	12.1 µs
RT	None	21.6 µs	0.0
MLS	K: Constant	35.6 µs	35.6 µs
MLR	K: Constant	15.4 µs	15.4 µs

Interrupt Instructions

Interrupt Instructions		DL05	
Instruction	Legal Data Types	Execute	Not Execute
ENI	None	23.8 µs	2.2 µs
DISI	None	9.4 µs	2.3 µs
INT	0	7.5 µs	0
IRT	None	6.6 µs	0
IRTC	None	0.9 µs	1.3 µs

Network Instructions

Network Instructions		DL05	
Instruction	Legal Data Types	Execute	Not Execute
RX	X, Y, C, T, CT, SP, S,V V:Data Reg. V:Bit Reg. P:Indir. (Data) P:Indir. (Bit)	1639.0 µs 1639.0 µs 1639.0 µs 1674.0 µs 1674.0 µs	4.2 µs 4.2 µs 4.2 µs 4.2 µs 4.2 µs
WX	X, Y, C, T, CT, SP, S, V V:Data Reg. V:Bit Reg. P:Indir. (Data) P:Indir. (Bit)	1691.0 µs 1691.0 µs 1691.0 µs 1726.0 µs 1726.0 µs	4.2 µs 4.2 µs 4.2 µs 4.2 µs 4.2 µs

C

Message Instructions

Message Instructions		DL05	
Instruction	Legal Data Types	Execute	Not Execute
FAULT	V:Data Reg. V:Bit Reg. K:Constant	163.5 µs 163.5 µs 204.4 µs	4.2 µs 4.2 µs 4.3 µs
DLBL	K: Constant	–	0.0
NCON	K: Constant	–	0.0
ACON	K: Constant	–	0.0
PRINT		817.23 µs	3.8 µs

RLL *PLUS* Instructions

RLL*PLUS* Instructions		DL05	
Instruction	Legal Data Types	Execute	Not Execute
ISG	S	57.27 µs	54.4 µs
SG	S	57.25 µs	54.4 µs
JMP	S	109.2 µs	8.9 µs
NJMP	S	109.2 µs	8.9 µs
CV	S	38.9 µs	38.9 µs
CVJMP	S	26.0 µs	26.0 µs

Drum Instructions

Drum Instructions		DL05	
Instruction	Legal Data Types	Execute	Not Execute
DRUM	CT	1204.0 µs	398.2 µs
EDRUM	CT	989.2 µs	421.05 µs

C

Word Bit Instructions

Word Bit Instructions		DL05	
Instruction	Legal Data Types	Execute	Not Execute
STRB	V:Data Reg. V:Bit Reg. P:Indir. (Data) P:Indir. (Bit)	5.6 µs 5.6 µs 30.8 µs 64.4 µs	5.6 µs 5.6 µs 30.8 µs 64.4 µs
STRNB	V:Data Reg. V:Bit Reg. P:Indir. (Data) P:Indir. (Bit)	5.6 µs 5.5 µs 30.7 µs 64.4 µs	5.6 µs 5.5 µs 30.7 µs 64.4 µs
ORB	V:Data Reg. V:Bit Reg. P:Indir. (Data) P:Indir. (Bit)	5.5 µs 5.5 µs 30.9 µs 64.5 µs	5.5 µs 5.5 µs 30.9 µs 64.5 µs
ORNB	V:Data Reg. V:Bit Reg. P:Indir. (Data) P:Indir. (Bit)	5.6 µs 5.5 µs 30.9 µs 64.5 µs	5.6 µs 5.5 µs 30.9 µs 64.5 µs
ANDB	V:Data Reg V:Bit Reg. P:Indir. (Data) P:Indir. (Bit)	5.6 µs 5.5 µs 30.9 µs 64.5 µs	5.6 µs 5.5 µs 30.9 µs 64.5 µs
ANDNB	V:Data Reg. V:Bit Reg. P:Indir. (Data) P:Indir. (Bit)	5.6 µs 5.6 µs 30.9 µs 64.6 µs	5.6 µs 5.6 µs 30.9 µs 64.5 µs
OUTB	V:Data Reg. V:Bit Reg. P:Indir. (Data) P:Indir. (Bit)	11.4 µs 11.4 µs 36.7 µs 70.2 µs	11.5 µs 11.5 µs 36.7 µs 70.4 µs
SETB	V:Data Reg. V:Bit Reg. P:Indir. (Data) P:Indir. (Bit)	9.5 µs 9.5 µs 34.7 µs 68.4 µs	4.7 µs 4.8 µs 30.0 µs 63.7 µs
RSTB	V:Data Reg. V:Bit Reg. P:Indir. (Data) P:Indir. (Bit)	9.8 µs 9.8 µs 35.1 µs 68.7 µs	4.8 µs 4.7 µs 30.0 µs 63.7 µs

Notes

Special Relays

In This Appendix:

DL05 PLC Special Relays D–2

DL05 PLC Special Relays

"Special Relays" are contacts which are set by the CPU operating system to indicate a particular system event has occurred. These contacts are available for use in your ladder program. Knowing just the right special relay contact to use for a particular situation can save a lot of programming time. Since the CPU operating system sets and clears special relay contacts, the ladder program only has to use them as inputs in ladder logic.

D

Startup and Real Time Relays		
SP0	First scan	On for the first scan after a power cycle or program to run transition only. The relay is reset to off on the second scan. It is useful where a function needs to be performed only on program startup.
SP1	Always ON	Provides a contact to insure an instruction is executed every scan.
SP2	Always OFF	Provides a contact that is always off.
SP3	1 minute clock	On for 30 seconds and off for 30 seconds.
SP4	1 second clock	On for 0.5 second and off for 0.5 second.
SP5	100 ms clock	On for 50 ms. and off for 50 ms.
SP6	50 ms clock	On for 25 ms. and off for 25 ms.
SP7	Alternate scan	On every other scan.

CPU Status Relays		
SP11	Forced run mode	On when the mode switch is in the run position and the CPU is running.
SP12	Terminal run mode	On when the CPU is in the run mode.
SP13	Test run mode	On when the CPU is in the test run mode.
SP15	Test stop mode	On when the CPU is in the test stop mode.
SP16	Terminal PGM mode	On when the mode switch is in the TERM position and the CPU is in program mode.
SP17	Forced stop	On when the mode switch is in the STOP position.
SP20	Forced stop mode	On when the STOP instruction is executed.
SP22	Interrupt enabled	On when interrupts have been enabled using the ENI instruction.

D

System Monitoring		
SP36	Override setup relay	On when the override function is used.
SP37	Scan controller	On when the actual scan time runs over the prescribed scan time.
SP40	Critical error	On when a critical error such as I/O communication loss has occurred.
SP41	Warning	On when a non critical error has occurred.
SP42	Diagnostics error	On when a diagnostics error or a system error occurs.
SP44	Program memory error	On when a memory error such as a memory parity error has occurred.
SP45	I/O error	On when an I/O error such as a blown fuse occurs.
SP46	Communication error	On when a communication error occurs on any of the CPU ports.
SP50	Fault instruction	On when a Fault Instruction is executed.
SP51	Watch Dog timeout	On if the CPU Watch Dog timer times out.
SP52	Grammatical error	On if a grammatical error has occurred either while the CPU is running or if the syntax check is run. V7755 will hold the exact error code.
SP53	Solve logic error	On if CPU cannot solve the logic.
SP54	Communication error	On when RX, WX, RD, WT instructions are executed with the wrong parameters.
SP56	Table instruction overrun	On if a table instruction with a pointer is executed and the pointer value is outside the table boundary.

Accumulator Status		
SP60	Value less than	On when the accumulator value is less than the instruction value.
SP61	Value equal to	On when the accumulator value is equal to the instruction value.
SP62	Greater than	On when the accumulator value is greater than the instruction value
SP63	Zero	On when the result of the instruction is zero (in the accumulator.)
SP64	Half borrow	On when the 16 bit subtraction instruction results in a borrow.
SP65	Borrow	On when the 32 bit subtraction instruction results in a borrow.
SP66	Half carry	On when the 16 bit addition instruction results in a carry.
SP67	Carry	On when the 32 bit addition instruction results in a carry.
SP70	Sign	On anytime the value in the accumulator is negative.
SP71	Pointer reference error	On when the V-memory specified by a pointer (P) is not valid.
SP73	Overflow	On if overflow occurs in the accumulator when a signed addition or subtraction results in an incorrect sign bit.
SP75	Data error	On if a BCD number is expected and a non–BCD number is encountered.
SP76	Load zero	On when any instruction loads a value of zero into the accumulator.

HSIO Pulse Output Relay		
SP104	Profile Complete	On when the pulse output profile is completed. (Mode 30)

Communication Monitoring Relay		
SP116	CPU port busy Port 2	On when port 2 is the master and sending data.
SP117	Communication error Port 2	On when port 2 is the master and has a communication error.
SP120	Communication busy	Option card slot
SP121	Communication error	Option card slot

Equal Relays for HSIO Mode 10 Counter Presets		
SP540	Current = target value	On when the counter current value equals the value in V2320 / V2321.
SP541	Current = target value	On when the counter current value equals the value in V2322 / V2323.
SP542	Current = target value	On when the counter current value equals the value in V2324 / V2325.
SP543	Current = target value	On when the counter current value equals the value in V2326 / V2327.
SP544	Current = target value	On when the counter current value equals the value in V2330 / V2331.
SP545	Current = target value	On when the counter current value equals the value in V2332 / V2333.
SP546	Current = target value	On when the counter current value equals the value in V2334 / V2335.
SP547	Current = target value	On when the counter current value equals the value in V2336 / V2337.
SP550	Current = target value	On when the counter current value equals the value in V2340 / V2341.
SP551	Current = target value	On when the counter current value equals the value in V2342 / V2343.
SP552	Current = target value	On when the counter current value equals the value in V2344 / V2345.
SP553	Current = target value	On when the counter current value equals the value in V2346 / V2347.
SP554	Current = target value	On when the counter current value equals the value in V2350 / V2351.
SP555	Current = target value	On when the counter current value equals the value in V2352 / V2353.
SP556	Current = target value	On when the counter current value equals the value in V2354 / V2355.
SP557	Current = target value	On when the counter current value equals the value in V2356 / V2357.
SP560	Current = target value	On when the counter current value equals the value in V2360 / V2361.
SP561	Current = target value	On when the counter current value equals the value in V2362 / V2363.
SP562	Current = target value	On when the counter current value equals the value in V2364 / V2365.
SP563	Current = target value	On when the counter current value equals the value in V2366 / V2367.
SP564	Current = target value	On when the counter current value equals the value in V2370 / V2371.
SP565	Current = target value	On when the counter current value equals the value in V2372 / V2373.
SP566	Current = target value	On when the counter current value equals the value in V2374 / V2375.
SP567	Current = target value	On when the counter current value equals the value in V2376 / V2377.

High-speed Input and Pulse Output Features

Appendix E

In This Chapter:

Introduction E–2
Choosing the HSIO Operating Mode E–4
Mode 10: High-Speed Counter E–6
Mode 20: Quadrature Counter E–18
Mode 30: Pulse Output E–24
Trapezoidal Profile Operation E–31
Registration Profile Operation E–34
Velocity Profile Operation E–39
Mode 40: High-Speed Interrupts E–44
Mode 50: Pulse Catch Input E–49
Mode 60: Discrete Inputs with Filter E–52

Introduction

Built-in Motion Control Solution

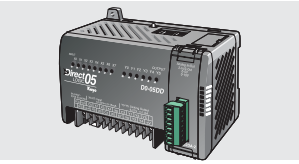

Many machine control applications require various types of simple high-speed monitoring and control. These applications usually involve some type of motion control, or high-speed interrupts for time-critical events. The DL05 Micro PLC solves this traditionally expensive problem with built-in CPU enhancements. Let's take a closer look at the available high-speed I/O features.

The available **high-speed input features** are:

- High Speed Counter (5 kHz max.) with up to 24 counter presets and built-in interrupt subroutine, counts up only, with reset
- Quadrature encoder inputs to measure counts and clockwise or counter clockwise direction (5 kHz max.), counts up or down, with reset
- High-speed interrupt input for immediate response to critical or time-sensitive tasks
- Pulse catch feature to monitor one input point, having a pulse width as small as 100 µs (0.1ms)
- Programmable discrete filtering (both on and off delay up to 99ms) to ensure input signal integrity (this is the default mode for inputs X0–X2)

The available **pulse output features** are:

- Single-axis programmable pulse output (7 kHz max.) with three profile types, including trapezoidal moves, registration, and velocity control

Availability of HSIO Features

IMPORTANT: Please note the following restrictions on availability of features:

- High-speed input options are available only on DL05s with DC inputs.
- Pulse output options are available only on DL05s with DC outputs.
- Only one HSIO feature may be in use at one time. You cannot use a high–speed input feature and the pulse output at the same time.

Specifications				
DL05 Part Number	Discrete Input Type	Discrete Output Type	High-Speed Input	Pulse Output
D0–05AR	AC	Relay	No	No
D0–05DR	DC	Relay	Yes	No
D0–05AD	AC	DC	No	Yes
D0–05DD	DC	DC	Yes	Yes
D0–05AA	AC	AC	No	No
D0–05DA	DC	AC	Yes	No
D0–05DR–D	DC	Relay	Yes	No
D0–05DD–D	DC	DC	Yes	Yes

Dedicated High- Speed I/O Circuit

The internal CPU's main task is to execute the ladder program and read/write all I/O points during each scan. In order to service high-speed I/O events, the DL05 includes a special circuit which is dedicated to a portion of the I/O points. Refer to the DL05 block diagram in the figure below.

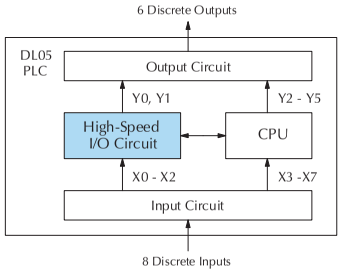

The high-speed I/O circuit (HSIO) is dedicated to the first three inputs (X0 – X2) and the first two outputs (Y0 – Y1). We might think of this as a "CPU helper". In the default operation (called "Mode 60") the HSIO circuit just passes through the I/O signals to or from the CPU, so that all eight inputs behave equally and all six outputs behave equally. When the CPU is configured in any other HSIO Mode, the HSIO circuit imposes a specialized function on the portion of inputs and outputs shown. The HSIO circuit *operates independently of the CPU program scan*. This provides accurate measurement and capturing of high-speed I/O activity while the CPU is busy with ladder program execution.

Wiring Diagrams for Each HSIO Mode

After choosing the appropriate HSIO mode for your application, you'll need to refer to the section in this chapter for that specific mode. Each section includes wiring diagram(s) to help you connect the High-Speed I/O points correctly to field devices. An example of the quadrature counter mode diagram is shown below.

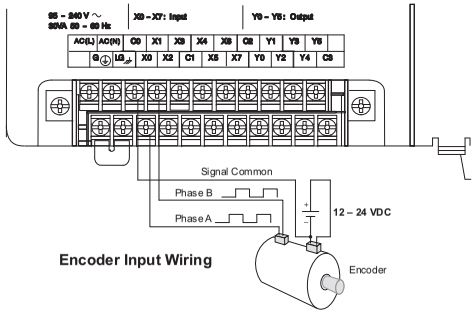

Choosing the HSIO Operating Mode

Understanding the Six Modes

The High-Speed I/O circuit operates in one of the 6 basic modes as listed in the table below. The number in the left column is the mode number (later, we'll use these numbers to configure the PLC). Choose one of the following modes according to the primary function you want from the dedicated High-Speed I/O circuit. You can simply use all eight inputs and six outputs as regular I/O points with Mode 60.

High Speed I/O Basic Modes

Mode Number	Mode Name	Mode Features
10	High-Speed Counter	5 kHz counter with 24 presets and reset input, counts up only, causes interrupt on preset
20	Quadrature Counter	Channel A / Channel B 5 kHz quadrature input, counts up and down
30	Pulse Output	Stepper control – pulse and direction signals, programmable motion profile (7kHz max.)
40	High-Speed Interrupt	Generates an interrupt based on input transition or time
50	Pulse Catch	Captures narrow pulses on a selected input
60	Discrete/Filtered Input	Rejects narrow pulses on selected inputs

In choosing one of the six high-speed I/O modes, the I/O points listed in the table below operate only as the function listed. If an input point is not specifically used to support a particular mode, it usually operates as a filtered input by default. Similarly, output points operate normally unless Pulse Output mode is selected.

Physical I/O Point Usage

	DC Input Points		DC Output Points		
Mode	X0	X1	X2	Y0	Y1
High-Speed Counter	Counter clock	Filtered Input	Filtered Input or Reset Cnt	Regular Output	Regular Output
Quadrature Counter	Phase A Input	Phase B Input	Filtered Input or Reset Cnt	Regular Output	Regular Output
High-Speed Interrupt	Interrupt Input	Filtered Input	Filtered Input	Regular Output	Regular Output
Pulse Catch	Pulse Input	Filtered Input	Filtered Input	Regular Output	Regular Output
Pulse Output	Filtered Input	Filtered Input	Filtered Input	Pulse or CW Pulse	Direction or CCW Pulse
Filtered Input	Filtered Input	Filtered Input	Filtered Input	Regular Output	Regular Output

Default Mode

Mode 60 (Filtered Inputs) is the default mode. The DL05 is initialized to this mode at the factory, and any time you reset V-memory scratchpad. In the default condition, X0–X2 are filtered inputs (10 ms delay) and Y0–Y1 are standard outputs

Configuring the HSIO Mode

If you have chosen a mode suited to the high-speed I/O needs of your application, we're ready to proceed to configure the PLC to operate accordingly. In the block diagram below, notice the V-memory detail in the expanded CPU block. V-memory location V7633 determines the functional mode of the high-speed I/O circuit. *This is the most important V-memory configuration value for HSIO functions!*

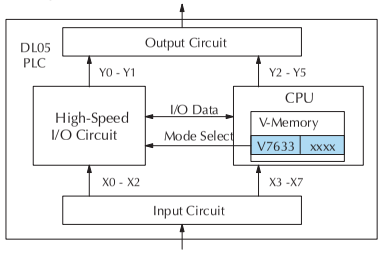

The contents of V7633 is a 16-bit word, to be entered in binary–coded decimal. The figure below defines what each 4-bit BCD digit of the word represents.

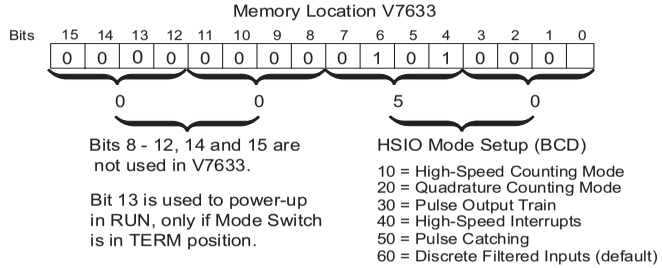

Bits 0 – 7 define the mode number 10, 20.. 60 previously referenced in this chapter. The example data "2050" shown selects Mode 50 – Pulse Catch (BCD = 50). The DL05 PLC ignores bits 8 - 12, 14 and 15 in V7633 (see System V-memory Map on page E-26).

Configuring Inputs X0 – X2

In addition to configuring V7633 for the HSIO mode, you'll need to program the next three locations in certain modes according to the desired function of input points X0 – X2. Other memory locations may require configuring, depending on the HSIO mode (see the corresponding section for particular HSIO modes).

	V-Memory	
Mode	V7633	xxxx
X0	V7634	xxxx
X1	V7635	xxxx
X2	V7636	xxxx

Mode 10: High-Speed Counter

Purpose

The HSIO circuit contains one high-speed counter. A single pulse train from an external source (X0) clocks the counter on each signal leading edge. The counter counts only upwards, from 0 to 99999999. The counter compares the current count with up to 24 preset values, which you define. The purpose of the presets is to quickly cause an action upon arrival at specific counts, making it ideal for such applications as cut-to-length. It uses counter registers CT76 and CT77 in the CPU.

Functional Block Diagram

Refer to the block diagram below. When the lower byte of HSIO Mode register V7633 contains a BCD "10", the high-speed up counter in the HSIO circuit is enabled. X0 automatically becomes the "clock" input for the high-speed counter, incrementing it upon each off-to-on transition. The external reset input on X2 is the default configuration for Mode 10. Input X1 is the filtered input, available to the ladder program.

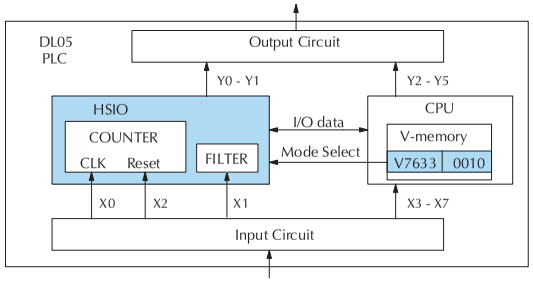

Instead of using X2 as a dedicated reset input, you can configure X2 as a normal filtered input. In this way, the counter reset must be generated in ladder logic.

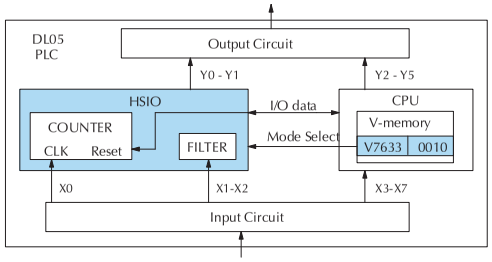

Next, we will discuss how to program the high-speed counter and its presets.

Wiring Diagram

A general wiring diagram for counters/encoders to the DL05 in HSIO Mode 10 is shown below. Many types of pulse-generating devices may be used, such as proximity switches, single-channel encoders, magnetic or optical sensors, etc. Devices with sinking outputs (NPN open collector) are probably the best choice for interfacing. If the counter sources to the inputs, it must output 12 to 24 VDC. Note that devices with 5V sourcing outputs will not work with DL05 inputs.

Interfacing to Counter Inputs

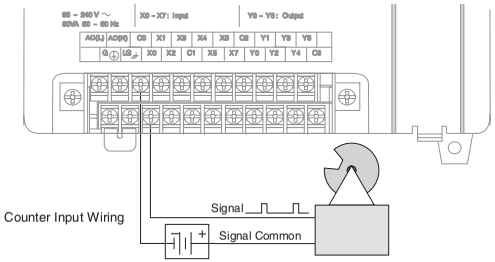

Interfacing to Counter Outputs

The DL05's DC inputs are flexible in that they detect current flow in either direction, so they can be wired to a counter with either sourcing or sinking outputs. In the following circuit, a counter has open-collector NPN transistor outputs. It sinks current from the PLC input point, which sources current. The power supply can be the FA–24PS or another supply (+12VDC or +24VDC), as long as the input specifications are met.

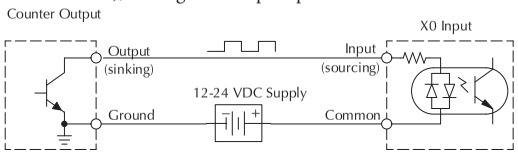

In the next circuit, an encoder has open-emitter PNP transistor outputs. It sources current to the PLC input point, which sinks the current back to ground. Since the encoder sources current, no additional power supply is required. However, note that the encoder output must be 12 to 24 volts (5V encoder outputs will not work).

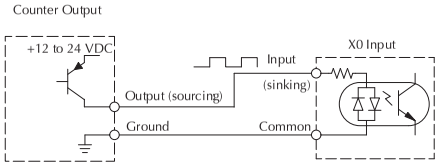

Setup for Mode 10

Recall that V7633 is the HSIO Mode Select register. Refer to the diagram below. Use BCD 10 in the lower byte of V7633 to select the High-Speed Counter Mode. The DL05 does not use bits 8 - 12, 14 and 15 in V7633.

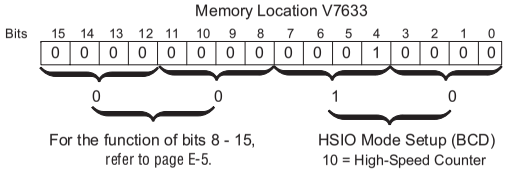

Choose the most convenient method of programming V7633 from the following:

- Include load and out instructions in your ladder program
- *Direct*SOFT 5's memory editor or Data View
- Use the Handheld Programmer D2–HPP

We recommend using the first method above so that the HSIO setup becomes an integral part of your application program. An example program later in this section shows how to do this.

Presets and Special Relays

The goal of counting is to do a special action when the count reaches a preset value. Refer to the figure below. The counter features 24 presets, which you can program. A preset is a number you derive and store so that the counter will constantly compare the current count with the preset. When the two are equal, a special relay contact is energized and program execution jumps to the interrupt routine. We recommend using the special relay(s) in the interrupt service routine to cause any immediate action you desire. After the interrupt service routine is complete, the CPU returns to the ladder program, resuming program execution from the point of interruption. The compare function is ready for the next preset event.

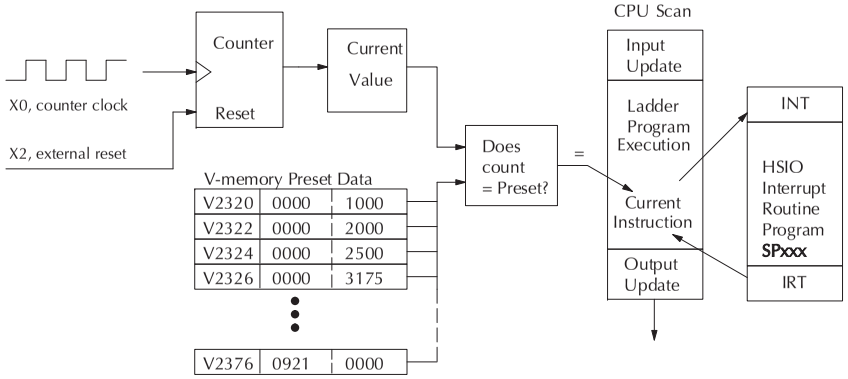

Preset Data Starting Location

V7630 is a pointer location which points to the beginning of the Preset Data Table. The default starting location for the Preset Data Table is V2320 (default after initializing scratchpad V-memory). However, you may change this by programming a different value in V7630. Use the LDA and OUT instructions as shown:

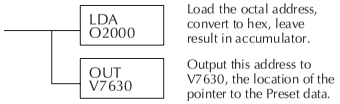

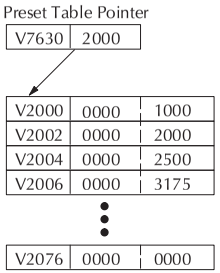

Using Fewer than 24 Presets

When using fewer than 24 preset registers, the HSIO looks for "0000 FFFF" (use LDD Kffff) in the next preset location to indicate the last preset has been reached. The example to the right uses four presets. The 0000 FFFF in V2331-V2330 indicates the previous preset was the last.

V2320	0000	1000
V2322	0000	2000
V2324	0000	2500
V2326	0000	3175
V2330	0000	FFFF

NOTE: Each successive preset must be greater than the previous preset value. If a preset value is less than a lower-numbered preset value, the CPU cannot compare for that value, since the counter can only count upwards.

Equal Relay Numbers

The following table lists all 24 preset register default locations. Each occupies two 16-bit V-memory registers. The corresponding special relay contact number is in the next column. We might also call these "equal" relay contacts, because they are true (closed) when the present high-speed counter value is equal to the preset value. Each contact remains closed until the counter value equals the next preset value.

Preset Register Table

Preset	Preset V-memory Register	Special Relay Number	Preset	Preset V-memory Register	Special Relay Number
1	V2321 / V2320	SP540	13	V2351 / V2350	SP554
2	V2323 / V2322	SP541	14	V2353 / V2352	SP555
3	V2325 / V2324	SP542	15	V2355 / V2354	SP556
4	V2327 / V2326	SP543	16	V2357 / V2356	SP557
5	V2331 / V2330	SP544	17	V2361 / V2360	SP560
6	V2333 / V2332	SP545	18	V2363 / V2362	SP561
7	V2335 / V2334	SP546	19	V2365 / V2364	SP562
8	V2337 / V2336	SP547	20	V2367 / V2366	SP563
9	V2341 / V2340	SP550	21	V2371 / V2370	SP564
10	V2343 / V2342	SP551	22	V2373 / V2372	SP565
11	V2345 / V2344	SP552	23	V2375 / V2374	SP566
12	V2347 / V2346	SP553	24	V2377 / V2376	SP567

Calculating Your Preset Values

The preset values occupy two data words each. They can range in value from 0000 0000 to 9999 9999, just like the high-speed counter value. All 24 values are absolute values, meaning that each one is an offset from the counter zero value.

The preset values must be individually derived for each application. In the industrial lathe diagram below, the PLC monitors the position of the lead screw by counting pulses. At points A, B, and C along the linear travel, the cutter head pushes into the work material and cuts a groove.

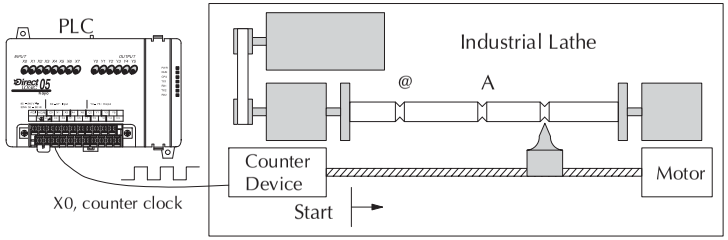

The timing diagram below shows the duration of each equal relay contact closure. Each contact remains on until the next one closes. All go off when the counter resets.

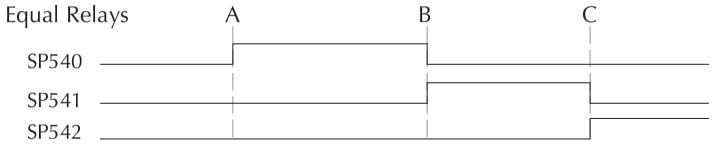

NOTE: Each successive preset must be two numbers greater than the previous preset value. In the industrial lathe example, B>A+1 and C>B+1.

X Input Configuration

The configurable discrete input options for High-Speed Counter Mode are listed in the table below. Input X0 is dedicated for the counter clock input. Input X1 can be a normal or filtered input. The section on Mode 60 operation at the end of this chapter describes programming the filter time constants. Input X2 can be configured as the counter reset, with or without the interrupt option. The interrupt option allows the reset input (X2) to cause an interrupt like presets do, but there is no SP relay contact closure (instead, X2 will be on during the interrupt routine, for 1 scan). Or finally, X2 may be left simply as a filtered input.

Input Options			
Input	**Configuration Register**	**Function**	**Hex Code Required**
X0	V7634	Counter Clock	0001
X1	V7635	Filtered Input	xx06, xx = filter time 0 - 99 ms (BCD)
X2	V7636	Counter Reset (no interrupt)	0007* (default) 0207*
		Counter Reset (with interrupt)	0107* 0307*
		Filtered Input	xx06, xx= filter time 0 - 99 ms (BCD)

*With the counter reset, you have the option of a normal reset or a faster reset. However, the fast reset does not recognize changed preset values during program execution. When '0007' or '0107' are set in V7636 and preset values are changed during program execution, the DL05 recognizes the changed preset values at the time of the reset. When '0207' or '0307' are set in V7636 the CPU does not check for changed preset values, so the DL05 has a faster reset time.

Writing Your Control Program

You may recall that the counter instruction is a standard instruction in the DL05 instruction set. Refer to the figure below. The mnemonic for the counter is UDC (up-down counter).The DL05 can have up to 128 counters, labeled CT0 through CT177. The high speed counter in the HSIO circuit is accessed in ladder logic by using UDC CT76. It uses counter registers CT76 and CT77 exclusively when the HSIO mode 10 is active (otherwise, CT76 and CT77 are available for standard counter use). The HSIO counter needs two registers because it is a double-word counter. It has three inputs as shown. The first input (Enable) allows counting when active. The middle input is a dummy and has no function other than it is required by the built-in compiler. The bottom signal is the reset. The Dummy Input must be off while the counter is counting.

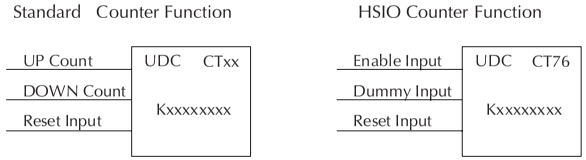

Counts UP and DOWN
Preload counter by write to value
Reset input is internal only

Counts UP only
Can use Dummy Input to change count
Reset may be internal or external

The next figure shows how the HSIO counter will appear in a ladder program. Note that the Enable Interrupt (ENI) command must execute before the counter value reaches the first preset value. We do this at powerup by using the first scan relay. When using the counter but not the presets and interrupt, we can omit the ENI.

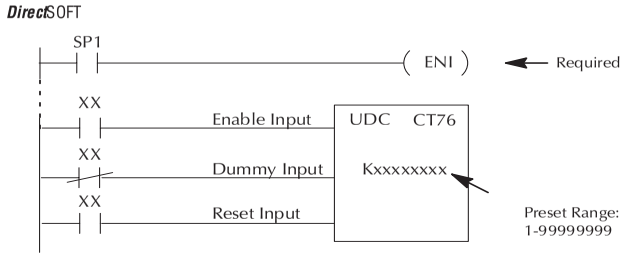

When the enable input is energized, the high-speed counter will respond to pulses on X0 and increment the counter at CT76 – CT77. The reset input contact behaves in a logical OR fashion with the physical reset input X2 (when selected). So, the high speed counter can receive a reset from either the contact(s) on the reset rung in the ladder, OR the external reset X2 if you have configured X2 as an external reset.

Program Example: Counter Without Preset

The following example is the simplest way to use the high-speed counter, which does not use the presets and special relays in the interrupt routine. The program configures the HSIO circuit for Mode 10 operation, so X0 is automatically the counter clock input. It uses the Compare-double (CMPD) instruction to cause action at certain count values. Note that this allows you to have more than 24 "presets". Then it configures X2 to be the external reset of the counter.

Program Example (cont'd)

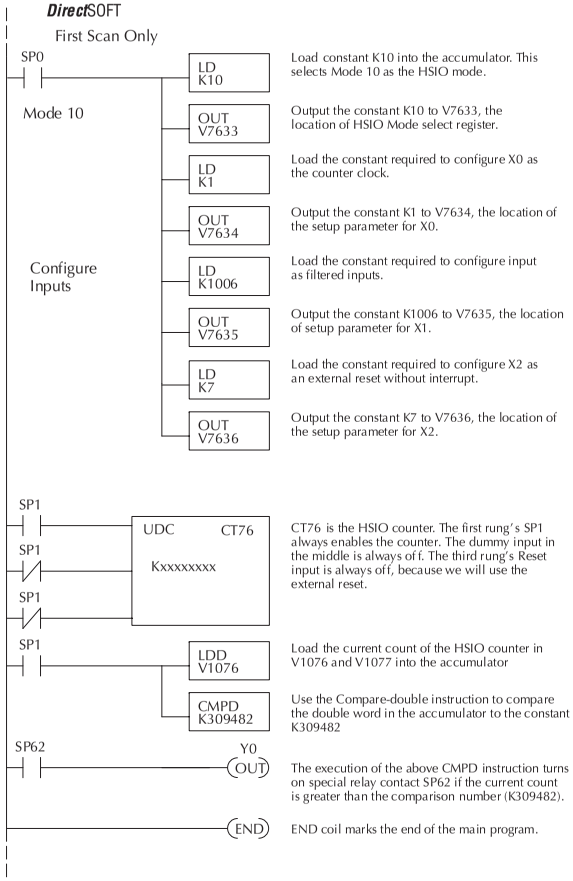

The compare double instruction above uses the current count of the HSIO counter to turn on Y0. This technique can make more than 24 comparisons, but it is scan-time dependent. However, use the 24 built-in presets with the interrupt routine if your application needs a very fast response time, as shown in the next example.

Counter With Presets Program Example

The following example shows how to program the HSIO circuit to trigger on three preset values. You may recall the industrial lathe example from the beginning of this chapter. This example program shows how to control the lathe cutter head to make three grooves in the work-piece at precise positions. When the lead screw turns, the counter device generates pulses which the DL05 can count. The three preset variables A, B, and C represent the positions (number of pulses) corresponding to each of the three grooves.

Preset Data

A	V2320	0000	1500
B	V2322	0000	3780
C	V2324	0000	4850
	V2326	0000	FFFF

I/O Assignments
X3 - Cutter head extended
X4 - Cutter head retracted
Y0 - Lead screw motor
Y1 - Cutter head solenoid

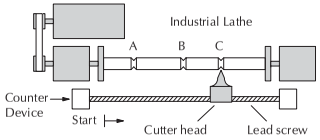

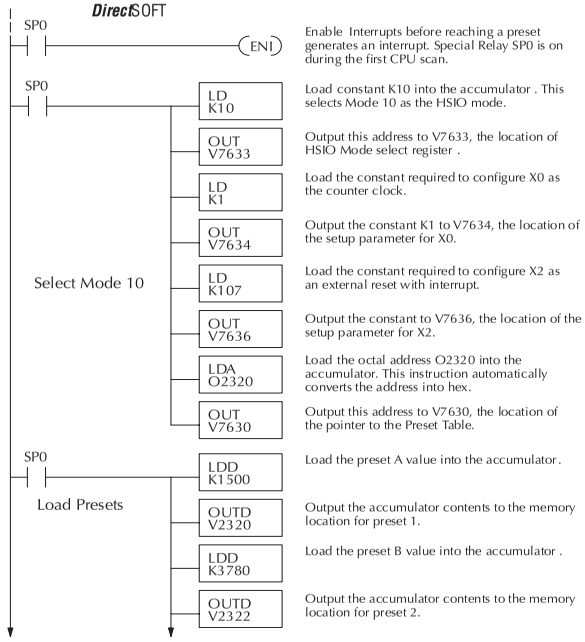

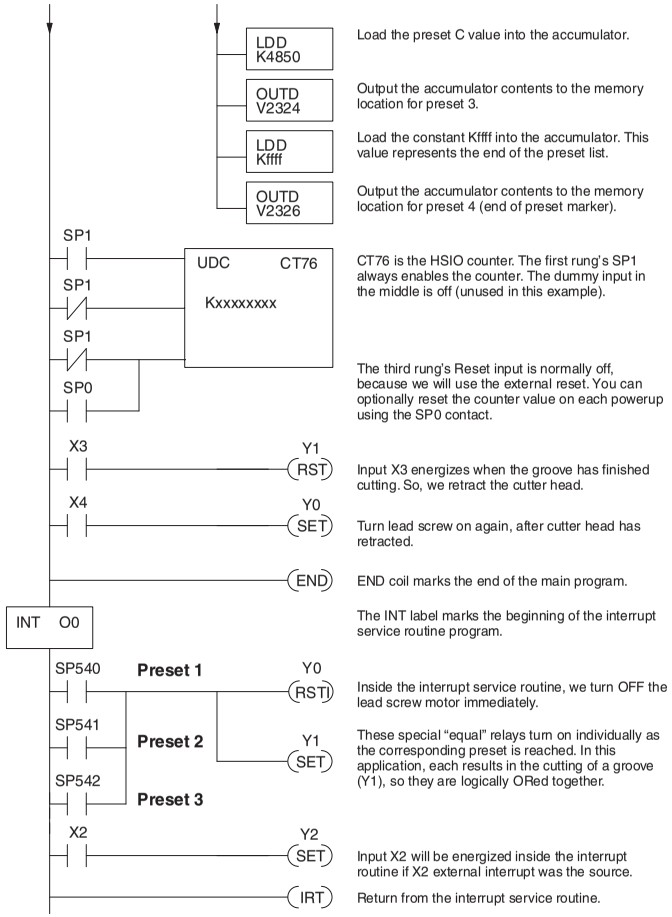

Some applications will require a different type of action at each preset. It is possible for the interrupt routine to distinguish one preset event from another, by turning on a unique output for each equal relay contact SPxxx. We can determine the source of the interrupt by examining the equal relay contacts individually, as well as X2. The X2 contact will be on (inside the interrupt routine only) if the interrupt was caused by the external reset, X2 input.

Counter With Preload Program Example

The following example shows how you can preload the current count with another value. When the preload command input (X4 in this example) is energized, we disable the counter from counting with C0. Then we write the value K3000 to the count register (V1076-V1077). We preload the current count of the counter with K3000. When the preload command (X4) is turned off, the counter resumes counting any pulses, but now starting from a count of 3000.

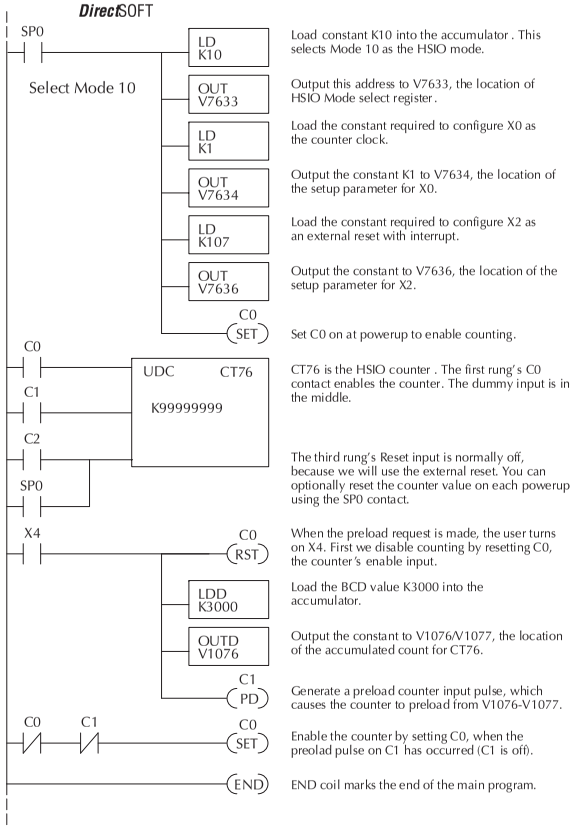

Troubleshooting Guide for Mode 10

If you're having trouble with Mode 10 operation, please study the following symptoms and possible causes. The most common problems are listed below.

Symptom: The counter does not count.

Possible causes:

1. **Field sensor and wiring** – Verify that the encoder, proximity switch, or counter actually turns on and illuminates the status LED for X0. The problem could be due to sinking-sourcing wiring problem, etc. Remember to check the signal ground connection. Also verify that the pulse on-time is long enough for the PLC to recognize it.
2. **Configuration** – use the Data View window to check the configuration parameters. V7633 must be set to 10, and V7634 must be set to 1 to enable the HSIO counter mode.
3. **Stuck in reset** – check the input status of the reset input, X2. If X2 is on, the counter will not count because it is being held in reset.
4. **Ladder program** – make sure you are using counter CT76 in your program. The top input is the enable signal for the counter. It must be on before the counter will count. The middle input is the dummy input. The bottom input is the counter reset, and must be off during counting.

Symptom: The counter counts but the presets do not function.

Possible causes:

1. **Configuration** – Ensure the preset values are correct. The presets are 32-bit BCD values having a range of 0 to 99999999. Make sure you write all 32 bits to the reserved locations by using the LDD and OUTD instructions. Use only even–numbered addresses, from V2320 to V2376. If using less than 24 presets, be sure to place "0000FFFF" in the location after the last preset used.
2. **Interrupt routine** – Only use Interrupt #0. Make sure the interrupt has been enabled by executing an ENI instruction prior to needing the interrupt. The interrupt routine must be placed after the main program, using the INT label and ending with an interrupt return IRT.
3. **Special relays** – Check the special relay numbers in your program. Use SP540 for Preset 1, SP541 for Preset 2, etc. Remember that only one special equal relay contact is on at a time. When the counter value reaches the next preset, the SP contact which is on now goes off and the next one turns on.

Symptom: The counter counts up but will not reset.

Possible causes:

1. Check the LED status indicator for X2 to make sure it is active when you want a reset. Or, if you are using an internal reset, use the status mode of *Direct*SOFT 5 to monitor the reset input to the counter.

Mode 20: Quadrature Counter

Purpose

The counter in the HSIO circuit can count two quadrature signal pulses instead of a single pulse train (mode 10 operation). Quadrature signals are commonly generated from incremental encoders, which may be rotary or linear. The quadrature counter has two ranges from 0 to 99999999 or -8388608 to 8388607. Using CT76 and CT77, the quadrature counter can count at up to a 5 kHz rate. Unlike Mode 10 operation, Mode 20 operation can count UP or DOWN, but does not feature automated preset values or "interrupt on external reset" capability. However, you have the standard ladder instruction preset of CT76.

Functional Block Diagram

The diagram below shows HSIO functionality in Mode 20. When the lower byte of HSIO Mode register V7633 contains a BCD "20", the quadrature counter in the HSIO circuit is enabled. Input X0 is dedicated to the Phase A quadrature signal, and input X1 receives Phase B signal. X2 is dedicated to reset the counter to zero value when energized.

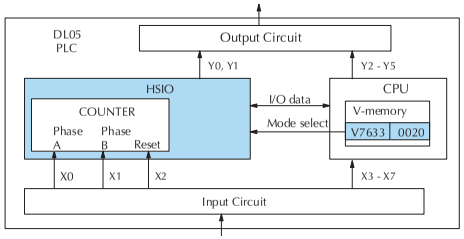

Quadrature Encoder Signals

Quadrature encoder signals contain position and direction information, while their frequency represents speed of motion. Phase A and B signals shown below are phase-shifted 90 degrees, thus the quadrature name. When the rising edge of Phase A precedes Phase B's leading edge (indicates clockwise motion by convention), the HSIO counter counts UP. If Phase B's rising edge precedes Phase A's rising edge (indicates counter-clockwise motion), the counter counts DOWN.

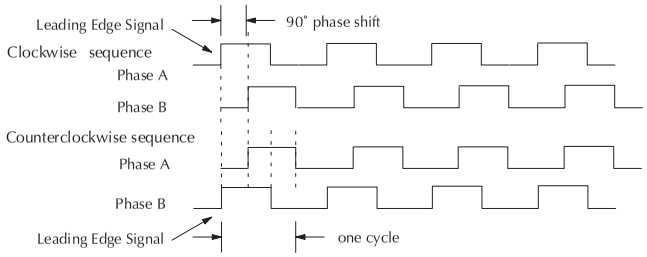

Wiring Diagram

A general wiring diagram for encoders to the DL05 in HSIO Mode 20 is shown below. Encoders with sinking outputs (NPN open collector) are probably the best choice for interfacing. If the encoder sources to the inputs, it must output 12 to 24 VDC. Note that encoders with 5V sourcing outputs will not work with DL05 inputs.

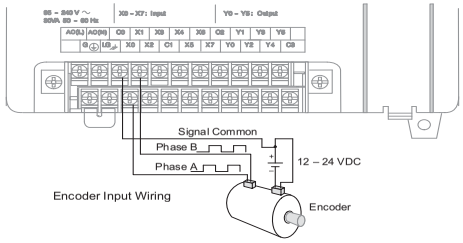

Interfacing to Encoder Outputs

The DL05's DC inputs are flexible in that they detect current flow in either direction, so they can be wired to an encoder with either sourcing or sinking outputs. In the following circuit, an encoder has open-collector NPN transistor outputs. It sinks current from the PLC input point, which sources current. The power supply can be the +24VDC auxiliary supply or another supply (+12VDC or +24VDC), as long as the input specifications are met.

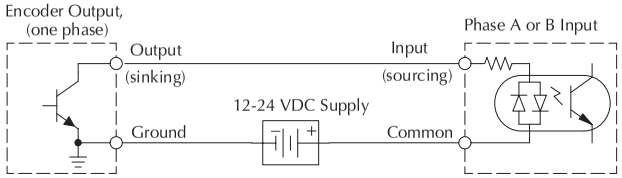

In the next circuit, an encoder has open-emitter PNP transistor outputs. It sources current to the PLC input point, which sinks the current back to ground. Since the encoder sources current, no additional power supply is required. However, note that the encoder output must be 12 to 24 volts (5V encoder outputs will not work).

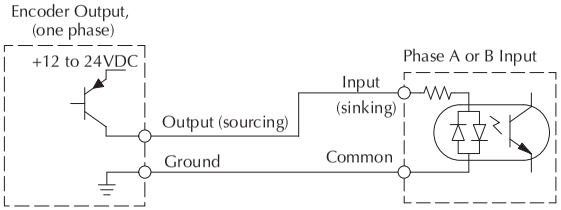

Setup for Mode 20

Recall that V7633 is the HSIO Mode Select register. Refer to the diagram below. Use BCD 20 in the lower byte of V7633 to select the High-Speed Counter Mode. The DL05 does not use bits 8 - 12, 14 and 15 in V7633.

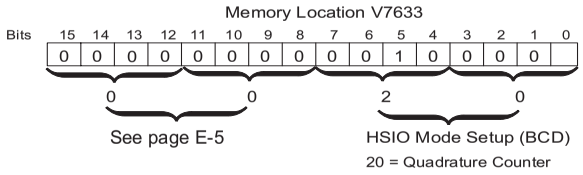

Choose the most convenient method of programming V7633 from the following:

- Include load and out instructions in your ladder program
- *Direct*SOFT 5's memory editor
- Use the Handheld Programmer D2–HPP

We recommend using the first method above so that the HSIO setup becomes an integral part of your application program. An example program later in this section shows how to do this.

X Input Configuration

The configurable discrete input options for High-Speed Counter Mode are listed in the table below. Input X0 is dedicated for Phase A, and input X1 is for Phase B. Input X2 is the reset input to the quadrature counter, but it does not cause an interrupt. The section on Mode 60 operation at the end of this chapter describes programming the filter time constants.

Input	Configuration Register	Function	Hex Code Required
X0	V7634	Phase A	0002 (default) quadrature, absolute 0 to 99999999
			0012 quadrature, absolute -8388608 to 8388607
X1	V7635	Phase B	0000
X2	V7636	Counter Reset (no interrupt)	0007
		Discrete filtered input	1006

Writing Your Control Program

You may recall that the Up-Down counter instruction is standard in the DL05 instruction set. Refer to the figure below. The mnemonic for the counter is **UDC** (up-down counter). The DL05 can have up to 128 counters, labeled CT0 through CT177. The quadrature counter in the HSIO circuit is accessed in ladder logic by using UDC CT76. It uses counter registers CT76 and CT77 exclusively when the HSIO mode 20 is active (otherwise, CT76 and CT77 are available for standard counter use). The HSIO counter needs two registers because it is a double-word counter. It also has three inputs as shown, but they are redefined. The first input is the enable signal, the middle is a preload (write), and the bottom is the reset. The enable input must be on before the counter will count. The enable input must be off during a preload.

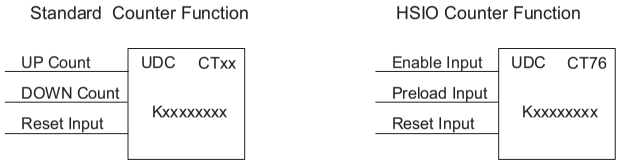

Counts UP and DOWN	Counts UP and DOWN (from X0, X1)
Preload counter by write to value	Can use Preload Input to change count
Reset input is internal only	Reset input may be internal or external

The next figure shows the how the HSIO quadrature counter will appear in a ladder program.

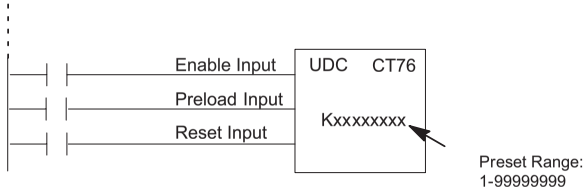

When the enable input is energized, the counter will respond to quadrature pulses on X0 and X1, incrementing or decrementing the counter at CT76 – CT77. The reset input contact behaves in a logical OR fashion with the physical reset input X2. This means the quadrature counter can receive a reset from either the contact(s) on the reset rung in the ladder, OR the external reset X2.

Quadrature Counter w/Preload Program Example

Since presets are not available in quadrature counting, this mode is best suited for simple counting and measuring. The example program on the following page shows how to configure the quadrature counter. The program configures the HSIO circuit for Mode 20 operation, so X0 is Phase A and X1 is Phase B clock inputs. Counter w/Preload

Program Example (cont'd)

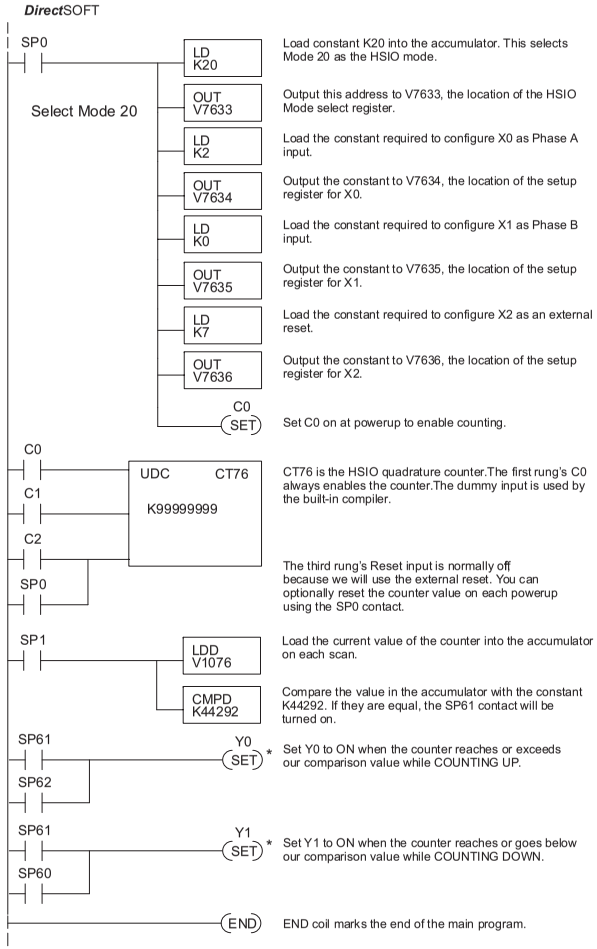

** **NOTE:** You can reset Y0 and Y1 at a convenient stage in the program by using the RST instruction.*

Counter Preload Program Example

To preload the counter, just add the following example rungs to the program above.

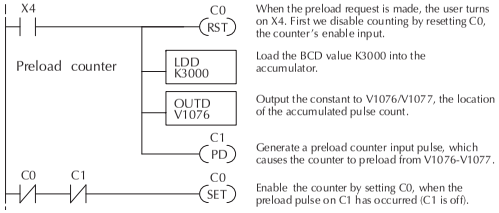

Troubleshooting Guide for HSIO Mode 20

If you're having trouble with Mode 20 operation, please study the following symptoms and possible causes. The most common problems are listed below.

Symptom: The counter does not count.

Possible causes:

1. **Field sensor and wiring** – Verify that the encoder or other field device inputs actually turn on and illuminates the status LEDs for X0 and X1. A standard incremental encoder will visibly, alternately turn on the LEDs for X0 and X1 when rotating slowly (1 RPM). Or, the problem could be due to a sinking-sourcing wiring problem, etc. Remember to check the signal ground connection. Also verify that the pulse on-time, duty cycle, voltage level, and frequency are within the input specifications.
2. **Configuration** – make sure all of the configuration parameters are correct. V7633 must be set to 20, and V7634 must be set to "0002" to enable the Phase A input, and V7635 must be set to "0000" to enable the Phase B input.
3. **Stuck in reset** – check the input status of the reset input, X2. If X2 is on, the counter will not count because it is being held in reset.
4. **Ladder program** – make sure you are using counter CT76 in your program. The top input is the enable signal for the counter. It must be on before the counter will count. The middle input is the dummy input and must be off for the counter to count. The bottom input is the counter reset, and must be off during counting.

Symptom: The counter counts in the wrong direction (up instead of down, and visa-versa).

Possible causes:

1. **Channel A and B assignment** – It's possible that Channel A and B assignments of the encoder wires are backwards from the desired rotation/counting orientation. Just swap the X0 and X1 inputs, and the counting direction will be reversed.

Symptom: The counter counts up and down but will not reset.

Possible causes:

1. Check the LED status indicator for X2 to make sure it is active when you want a reset. Also verify the configuration register V7636 for X2 is set to 7. Or, if you are using an internal reset, use the status mode of *Direct*SOFT 5 to monitor the reset input to the counter.

Mode 30: Pulse Output

Purpose

The HSIO circuit in Mode 30 generates output pulse trains suitable for open-loop control of a single-axis motion positioning system. It generates pulse (stepper increment) and direction signals which you can connect to motor drive systems and perform various types of motion control. Using Mode 30 Pulse Output, you can select from three profile types detailed later in this chapter:

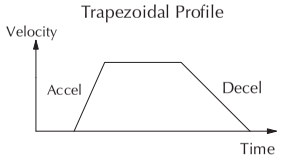

- **Trapezoidal** – Accel Slope to Target Velocity to Decel Slope
- **Registration** – Velocity to Position Control on Interrupt (also used for home search moves)
- **Velocity Control** – Speed and Direction only

The HSIO circuit becomes a high-speed pulse generator (up to 7 kHz) in Mode 30. By programming acceleration and deceleration values, position and velocity target values, the HSIO function automatically calculates the entire motion profile. The figure below shows the DL05 generating pulse and direction signals to the drive amplifier of a stepper positioning system. The pulses accomplish the profile independently and without interruption to ladder program execution in the CPU.

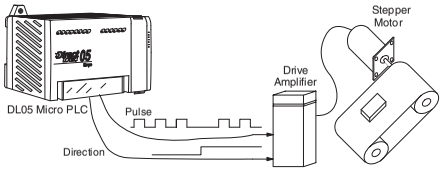

In the figure above, the DL05 generates pulse and direction signals. Each pulse represents the smallest increment of motion to the positioning system (such as one step or micro-step to a stepper system). Alternatively, the HSIO Pulse Output Mode may be configured to deliver counter clock-wise (CCW) and clock-wise (CW) pulse signals as shown to the right.

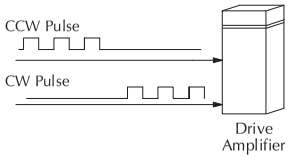

NOTE: The pulse output is designed for open loop stepper motor systems. This, plus its minimum velocity of 40 pps make it unsuitable for servo motor control.

Functional Block Diagram

The diagram below shows HSIO functionality in Mode 30. When the lower byte of HSIO Mode register V7633 contains a BCD "30", the pulse output capability in the HSIO circuit is enabled. The pulse outputs use Y0 and Y1 terminals on the output connector. Remember that the outputs can only be DC type to operate.

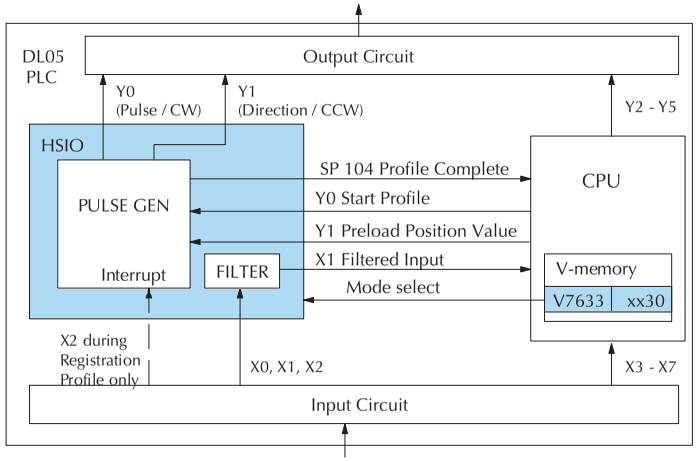

IMPORTANT NOTE: In Pulse Output Mode, Y0 and Y1 references are redefined or are used differently in two ways. Physical references refer to terminal screws, while logical references refer to I/O references in the ladder program. Please read the items below to understand this very crucial point.

Notice the I/O point assignment and usage in the above diagram:

- X0 and X1 can only be filtered inputs in Pulse Output Mode, and they are available as an input contacts to the ladder program.
- X2 behaves as an external interrupt to the pulse generator for registration profiles. In other profile modes, it can be used as a filtered input just like X1 (registration mode configuration shown above).
- References "Y0" and "Y1" are used in two different ways. At the discrete output connector, Y0 and Y1 terminals deliver the pulses to the motion system. The ladder program uses logical references Y0 and Y1 to initiate "Start Profile" and "Load Position Value" HSIO functions in Mode 30.

Hopefully, the above discussion will explain why some I/O reference names have dual meanings in Pulse Output Mode. **Please read the remainder of this section with care,** to avoid confusion about which actual I/O function is being discussed.

Wiring Diagram

The generalized wiring diagram below shows pulse outputs Y0 and Y1 connected to the drive amplifier inputs of a motion control system.

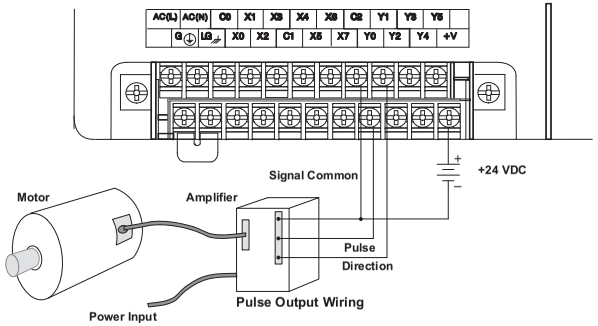

Interfacing to Drive Inputs

The pulse signals from Y0 and Y1 outputs will typically go to drive input circuits as shown above. Remember that the DL05's DC outputs are sinking-only. It will be helpful to locate equivalent circuit schematics of the drive amplifier. The following diagram shows how to interface to a sourcing drive input circuit.

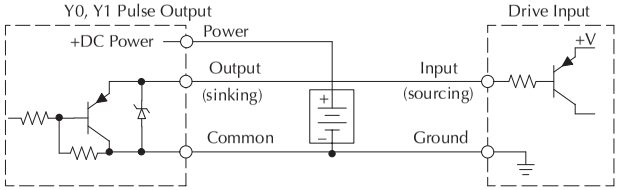

The following circuit shows how to interface to a sinking drive input using a pullup resistor. Please refer to Chapter 2 to learn how to calculate and install Rpullup.

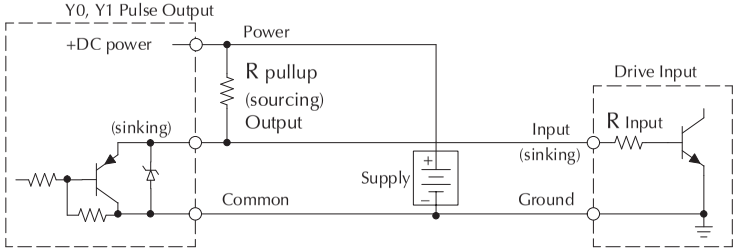

Motion Control Profile Specifications

The motion control profiles generated in Pulse Output Mode have the following specifications:

Motion Control Profile Specifications	
Parameter	**Specification**
Profiles	Trapezoidal – Accel Slope / Target Velocity / Decel Slope
	Registration – Velocity to Position Control on Interrupt
	Velocity Control – Speed and Direction only
Position Range	–8388608 to 8388607
Positioning	Absolute / relative command
Velocity Range	40 Hz to 7 kHz
V-memory registers	V2320 to V2325 (Profile Parameter Table)
Current Position	CT76 and CT77 (V1076 and V1077)

Physical I/O Configuration

The configurable discrete I/O options for Pulse Output Mode are listed in the table below. The CPU uses SP 104 contact to sense "profile complete". V7637 is used to select pulse/direction or CCW/CW modes for the pulse outputs. Input X2 is dedicated as the external interrupt for use in registration mode.

Physical I/O Configuration			
Physical Input	**Configuration Register**	**Function**	**Hex Code Required**
–	V7637	Y0 = Pulse Y1 = Direction	0103
		Y0 = CW Pulse Y1 = CCW Pulse	0003
X0	V7634	Discrete filtered input	xx06, xx = filter time 0 99 (BCD)
X1	V7635	Discrete filtered input	
X2	V7636	Discrete filtered input	

Logical I/O Functions

The following logical I/O references define functions that allow the HSIO to communicate with the ladder program.

Logical I/O/ Functions	
Logical I/O	**Function**
SP 104	Profile Complete – the HSIO turns on SP104 to the CPU when the profile completes. Goes back off when Start Profile (Y0) turns on.
Y0	Start Profile – the ladder program turns on Y0 to start motion. If turned off before the move completes, motion stops. Turning it on again will start another profile, unless the current position equals the target position.
Y1	Preload Position Value – if motion is stopped and Start Profile is off, you can load a new value in CT76/CT77, and turn on Y1. At that transition, the value in CT76/CT77 becomes the current position.

Setup for Mode 30

Recall that V7633 is the HSIO Mode Select register. Refer to the diagram below. Use BCD 30 in the lower byte of V7633 to select the High-Speed Counter Mode. The DL05 does not use bits 8 - 12, 14 and 15 in V7633.

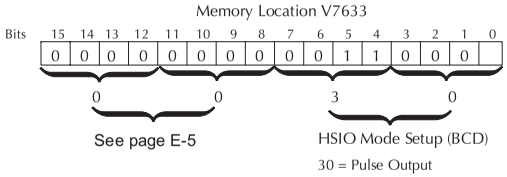

Choose the most convenient method of programming V7633 from the following:

- Include load and out instructions in your ladder program
- *Direct*SOFT 5's memory editor
- Use the Handheld Programmer D2–HPP

We recommend using the first method above so that the HSIO setup becomes an integral part of your application program. An example program later in this section shows how to do this.

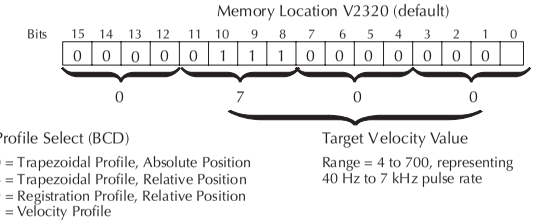

Profile / Velocity Select Register

The first location in the Profile Parameter Table stores two key pieces of information. The upper four bits (12–15) select the type of profile required. The lower 12 bits (0-11) select the Target Velocity.

The ladder program must program this location before initiating any of the three profiles. The LD and OUT instruction will write all 16 bits, so be sure to fully specify the full four-digit BCD value for the Position/Velocity Select Register each time.

The absolute and relative selection determines how the HSIO circuit will interpret your specified target position. Absolute position targets are referenced to zero. Relative position targets are referenced to the current position (previous target position). You may choose whichever reference method that is most convenient for your application.

Profile Parameter Table

V7630 is a pointer location which points to the beginning of the Profile Parameter Table. The default starting location for the profile parameter table is V2320. However, you may change this by programming a different value in V7630. Remember to use the LDA (load address) instruction, converting octal into hex.

The HSIO uses the next V-memory register past the bottom of the profile parameter table to indicate profile errors. See the error table at the end of this section for error code definitions.

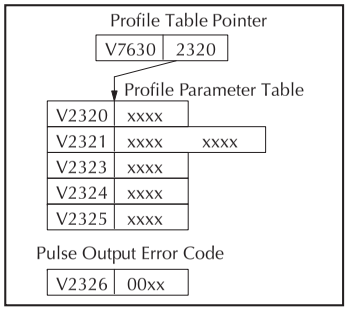

Trapezoidal Profile

V-Memory	Function	Range	Units
V2320, bits 12 – 15	Trapezoidal Profile	0=absolute, 8=relative	–
V2320,	Target Velocity Value	4 to 700	x 10 pps
V2321/ 2322	Target Position Value *	–8388608 to 8388607	Pulses
V2323	Starting Velocity	4 to 100	x 10 pps
V2324	Acceleration Time	1 to 100	x 100 ms
V2325	Deceleration Time	1 to 100	x 100 ms
V2326	Error Code	(see end of section)	–

* To set a negative number, put 8 in the most significant digit. For example: 8388608 is 88388608 in V2321 and V2322.

Registration Profile

V-Memory	Function	Range	Units
V2320, bits 12 – 15	Registration Profile	9=relative	–
V2320, bits 0 – 11	Target Velocity Value	4 to 700	x 10 pps
V2321/ 2322	Target Position Value*	–8388608 to 8388607	Pulses
V2323	Starting Velocity	4 to 100	x 10 pps
V2324	Acceleration Time	1 to 100	x 100 ms
V2325	Deceleration Time	1 to 100	x 100 ms
V2326	Error Code	(see end of section)	–

* To set a negative number, put 8 in the most significant digit. For example: 8388608 is 88388608 in V2321 and V2322.

Velocity Profile

V-Memory	Function	Range	Units
V2320	Velocity Profile	2000 only	–
V2321/ 2322	Direction Select	80000000=CCW, 0=CW	Pulses
V2323	Velocity	4 to 700	x 10 pps
V2326	Error Code	(see end of section)	–

E

Choosing the Profile Type

Pulse Output Mode generates three types of motion profiles. Most applications use one type for most moves. However, each move can be different if required.

- Trapezoidal – Accel Slope to Target Velocity to Decel Slope
- Registration – Velocity to Position Control on Interrupt
- Velocity Control – Speed and Direction only

Trapezoidal Profile Defined

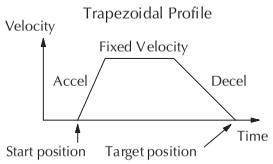

The trapezoidal profile is the most common positioning profile. It moves the load to a pre-defined target position by creating a move profile. The acceleration slope is applied at the starting position. The deceleration slope is applied backwards from the target position. The remainder of the move in the middle is spent traveling at a defined velocity.

Trapezoidal profiles are best for simple point-to-point moves, when the distance between the starting and ending positions of the move is known in advance.

Registration profiles solve a class of motion control problems. In some applications, product material in work moves past a work tool such as a drill station. Shown to the right, registration marks on the scrap area of the work-piece allow a machine tool to register its position relative to the rectangle, to drill properly.

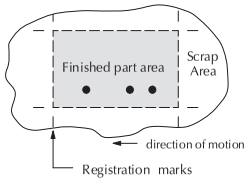

Home search moves allow open-loop motion systems to re-calibrate (preload) the current position value at powerup.

Registration and Home Search Profiles Defined

Registration profiles are a combination of velocity and position control modes. The move begins by accelerating to a programmed velocity. The velocity is sustained and the move is of indefinite duration. When an external interrupt signal occurs (due to registration sensing), the profile switches from velocity to position control. The move ends by continuing motion a pre-defined distance past the interrupt point (such as a drill hole location). The deceleration ramp is applied in advance of the target position.

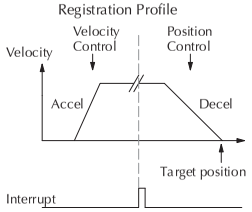

Velocity Profile Defined

The velocity profile controls only the direction and speed of motion. There is no target position specified, so the move can be of indefinite length. Only the first velocity value needs to be defined. The remaining velocity values can be created while motion is in progress. Arrows in the profile shown indicate velocity changes.

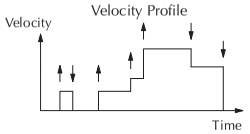

E

Trapezoidal Profile Operation

Trapezoidal Profile Applications

The trapezoidal profile is best suited for simple point-to-point moves, when the target position is known in advance. Starting velocities must be within the range of 40 pps to 1k pps. The remainder of the profile parameters are in the profile parameter table.

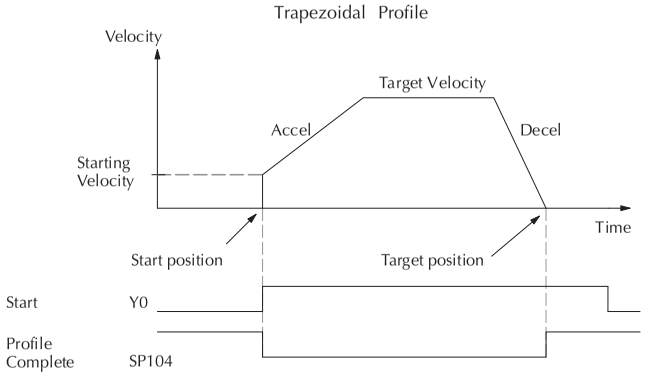

The time line of signal traces below the profile indicates the order of events. The HSIO uses logical output Y0 as the Start input to the HSIO, which starts the profile. Immediately the HSIO turns off the Profile Complete signal (SP104), so the ladder program can monitor the progress of the move. Typically a ladder program will monitor this bit so it knows when to initiate the next profile move.

If you are familiar with motion control, you'll notice that we do not have to specify the direction of the move. The HSIO function examines the target position relative to the current position, and automatically outputs the correct direction information to the motor drive.

Notice that the motion accelerates immediately to the starting velocity. This segment is useful in stepper systems so we can jump past low speed areas when low-torque problems or a resonant point in the motor might cause a stall. (When a stepper motor stalls, we have lost the position of the load in open-loop positioning systems). However, it is preferable not to make the starting velocity too large, because the stepper motor will also "slip" some pulses due to the inertia of the system.

When you need to change the current position value, use logical Y1 output coil to load a new value into the HSIO counter. If the ladder program loads a new value in CT76/CT77 (V1076/V1077), then energizing Y1 will copy that value into the HSIO circuit counter. This must occur before the profile begins, because the HSIO ignores Y1 during motion.

Trapezoidal Profile Program Example

The trapezoidal profile we want to perform is drawn and labeled in the following figure. It consists of a non-zero starting velocity, and moderate target velocity.

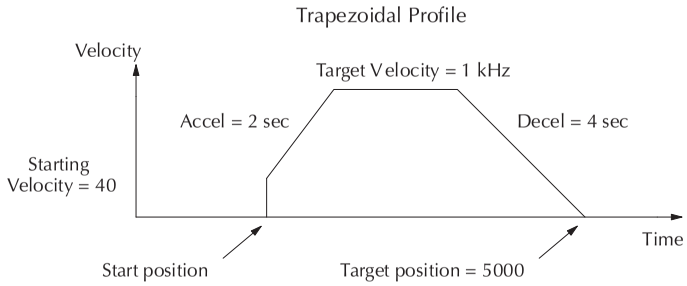

The following program will realize the profile drawn above, when executed. The beginning of the program contains all the necessary setup parameters for Pulse Output Mode 30. We only have to do this once in the program, so we use first-scan contact SP0 to trigger the setup.

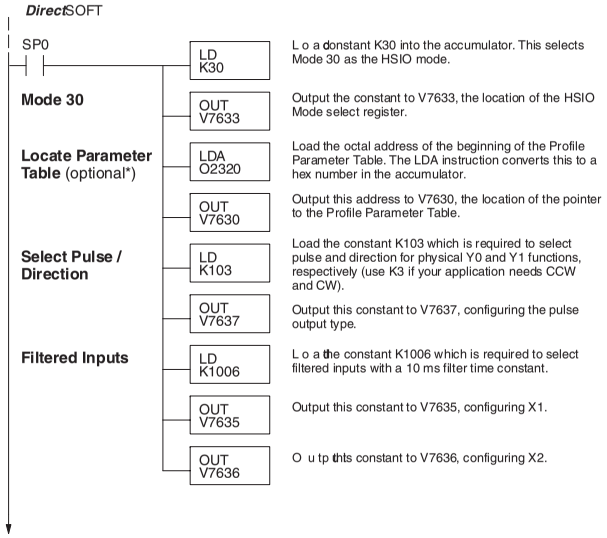

* If the Locate Parameter Table is not used you must remove both the LDA function and the OUT function below it.

Program Example (cont'd)

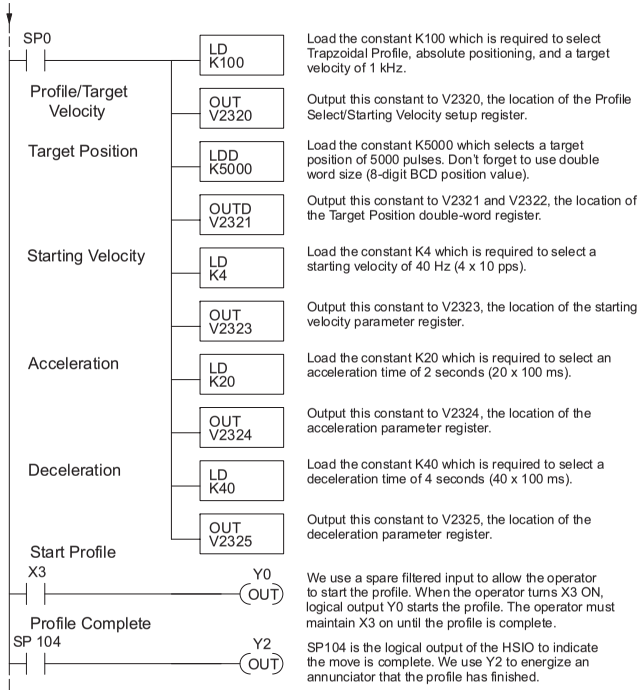

Preload Position Value

At any time you can write (preload) a new position into the current position value. This often done after a home search (see the registration example programs).

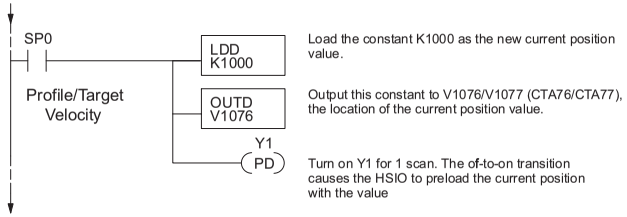

Registration Profile Operation

Registration Applications

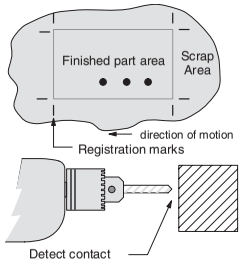

1. In a typical application shown to the right, product material in work moves past a work tool such as a drill. Registration marks on the scrap area of the work-piece allow a machine tool to register its position relative to the rectangle, to drill properly.

2. In other examples of registration, the work piece is stationary and the tool moves. A drill bit may approach the surface of a part in work, preparing to drill a hole of precise depth. However, the drill bit length gradually decreases due to tool wear. A method to overcome this is to detect the moment of contact with the part surface on each drill, moving the bit into the part a constant distance after contact.

3. The home search move allows a motion system to calibrate its position on startup. In this case, the positioning system makes an indefinite move and waits for the load to pass by a home limit switch. This creates an interrupt at the moment when the load is in a known position. We then stop motion and preload the position value with a number which equates to the physical "home position".

The registration profile begins with only velocity control. When an interrupt pulse occurs on physical input X2, the starting position is declared to be the present count (current load position). The velocity control switches to position control, moving the load to the target position. Note that the minimum starting velocity is 40 pps. This instantaneous velocity accommodates stepper motors that can stall at low speeds.

The time line of signal traces below the profile indicates the order of events. The CPU uses

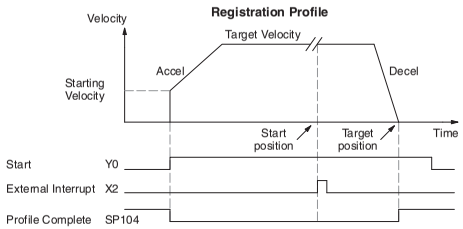

logical output Y0 to start the profile. Immediately the HSIO turns off the Profile Complete signal (SP104), so the ladder program can monitor the move's completion by sensing the signal's on state.

Registration Profile Program Example

The registration profile we want to perform is drawn and labeled in the following figure. It consists of a non-zero starting velocity, and moderate target velocity.

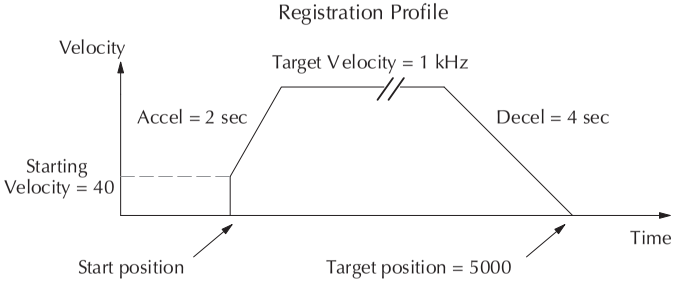

The following program will realize the profile drawn above, when executed. The first program rung contains all the necessary setup parameters. We only have to do this once in the program, so we use first-scan contact SP0 to trigger the setup.

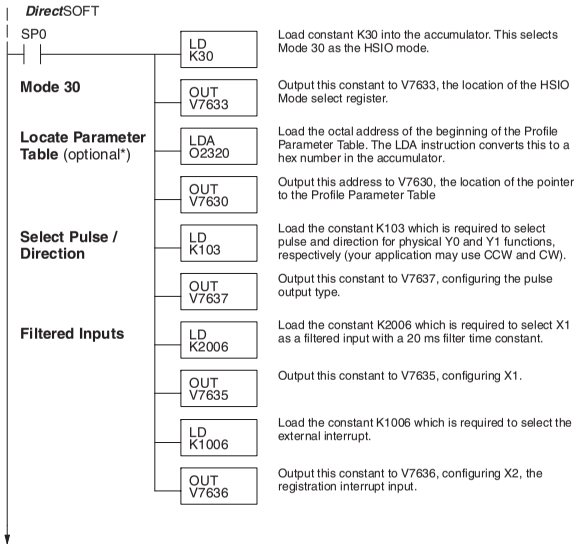

* If the Locate Parameter Table is not used you must remove both the LDA function and the OUT function below it.

Program Example (cont'd)

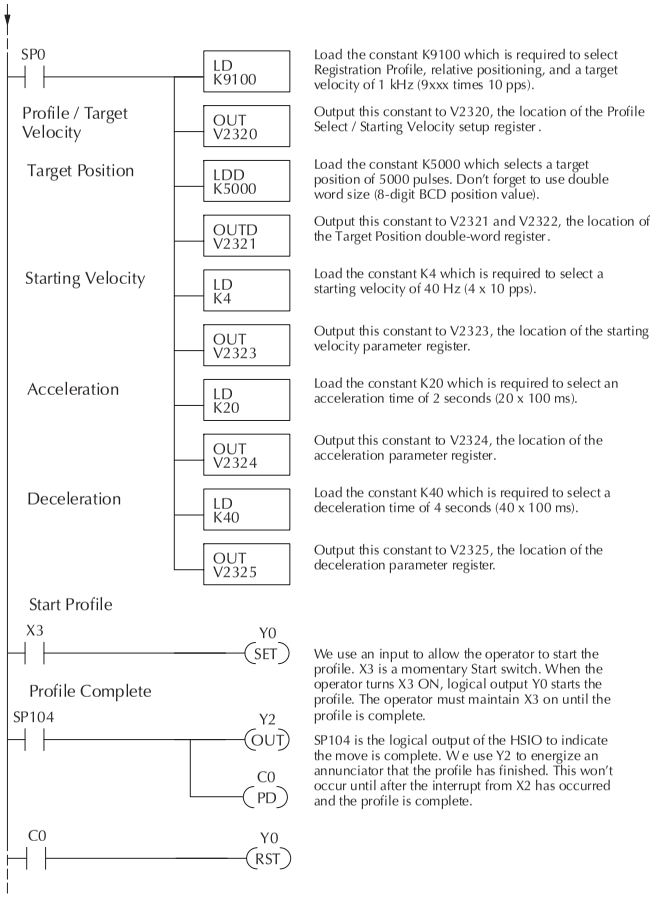

The profile will begin when the start input (X3) is given. Then the motion begins an indefinite move, which lasts until an external interrupt on X2 occurs. Then the motion continues on for 5000 more pulses before stopping.

Home Search Program Example

One of the more challenging aspects of motion control is the establishment of actual position at powerup. This is especially true for open-loop systems which do not have a position feedback device. However, a simple limit switch located at an exact location on the positioning mechanism can provide "position feedback" at one point. For most stepper control systems, this method is a good and economical solution.

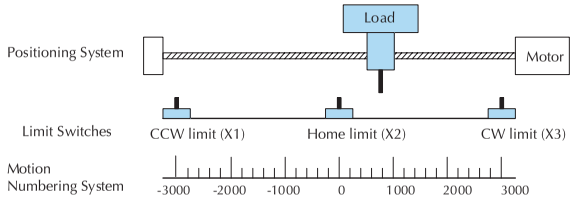

In the drawing above, the load moves left or right depending on the CCW/CW direction of motor rotation. The PLC ladder program senses the CCW and CW limit switches to stop the motor, before the load moves out-of-bounds and damages the machine. The home limit switch is used at powerup to establish the actual position. The numbering system is arbitrary, depending on a machine's engineering units.

At powerup, we do not know whether the load is located to the left or to the right of the home limit switch. Therefore, we will initiate a *home search profile*, using the registration mode. The home limit switch is wired to X2, causing the interrupt. We choose an arbitrary initial search direction, moving in the CW (left-to-right) direction.

- If the home limit switch closes first, then we stop and initialize the position (this value is typically "0", but it may be different if preferred).
- However, if the CW limit switch closes first, we must reverse the motor and move until the home limit switch closes, stopping just past it.

In the latter case, we repeat the first move, because we always need to make the final approach to the home limit switch *from the same direction*, so that the final physical position is the same in either case!

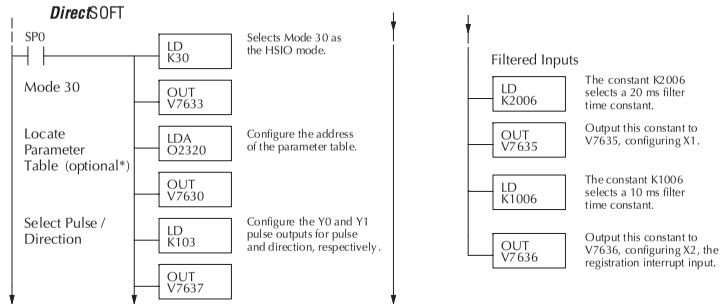

* If the Locate Parameter Table is not used you must remove both the LDA function and the OUT function below it.

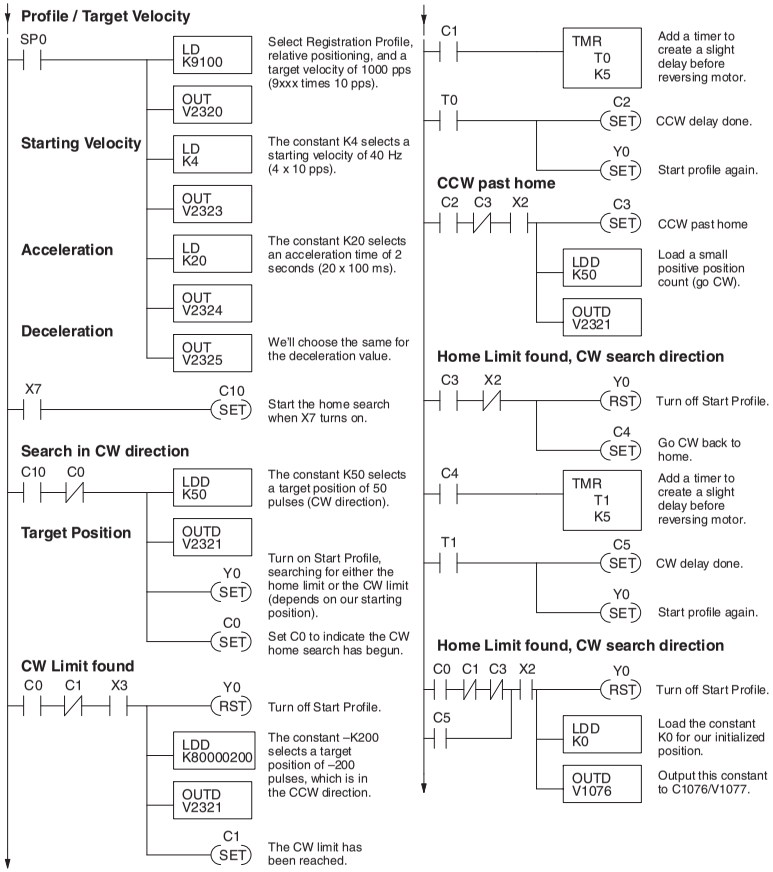

The home search profile will execute specific parts of the program, based on the order of detection of the limit switches. Ladder logic sets C0 to initiate a home search in the CW direction. If the CW limit is encountered, the program searches for home in the CCW direction, passes it slightly, and does the final CW search for home. After reaching home, the last ladder rung preloads the current position to "0".

Velocity Profile Operation

Velocity Profile Applications

The velocity profile is best suited for applications which involve motion but do not require moves to specific points. Conveyor speed control is a typical example.

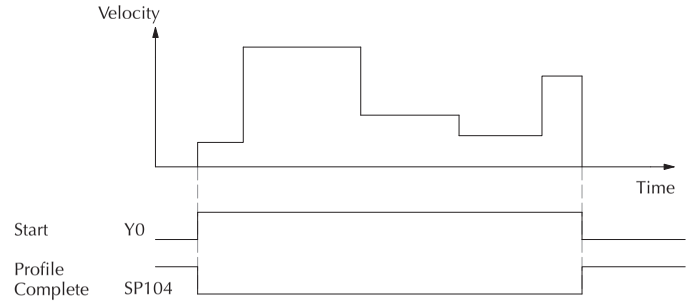

The time line of signal traces below the profile indicates the order of events. Assuming the velocity is set greater than zero, motion begins when the Start input (Y0) energizes. Since there is no end position target, the profile is considered in progress as long as the Start input remains active. The profile complete logical input to ladder logic (X0) correlates directly to the Start input status when velocity profiles are in use.

While the Start input is active, the ladder program can command a velocity change by writing a new value to the velocity register (V2323 by default). The full speed range of 40 Hz to 7 kHz is available. Notice from the drawing that there are no acceleration or deceleration ramps between velocity updates. This is how velocity profiling works with the HSIO. However, the ladder program can command more gradual velocity changes by incrementing or decrementing the velocity value more slowly.

A counter or timer can be useful in creating your own acceleration/deceleration ramps. Unless the load must do a very complex move, it is easier to let the HSIO function generate the accel/decel ramps by selecting the trapezoidal or registration profiles instead.

Unlike the trapezoidal and registration profiles, you must specify the desired direction of travel with velocity profiles. Load the direction select register (V2321/V2322 by default) with 8000 0000 hex for CCW direction, or 0 for CW direction.

Velocity Profile Program Example

The velocity profile we want to perform is drawn and labeled in the following figure. Each velocity segment is of indefinite length. The velocity only changes when ladder logic (or other device writing to V-memory) updates the velocity parameter.

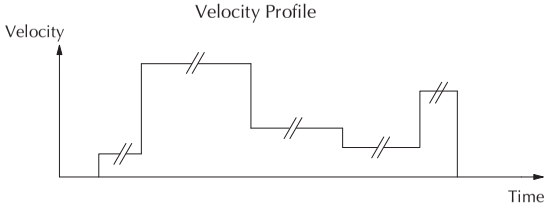

The following program uses dedicated discrete inputs to load in new velocity values. This is a fun program to try, because you can create an infinite variety of profiles with just two or three input switches. The intent is to turn on only one of X1, X2, or X3 at a time. The beginning of the program contains all the necessary setup parameters for Pulse Output Mode 30. We only have to do this once in the program, so we use first-scan contact SP0 to trigger the setup

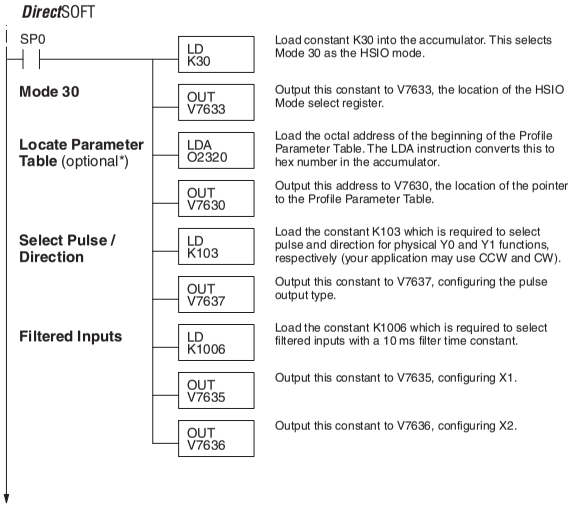

* If the Locate Parameter Table is not used you must remove both the LDA function and the OUT function below it.

Program Example (cont'd)

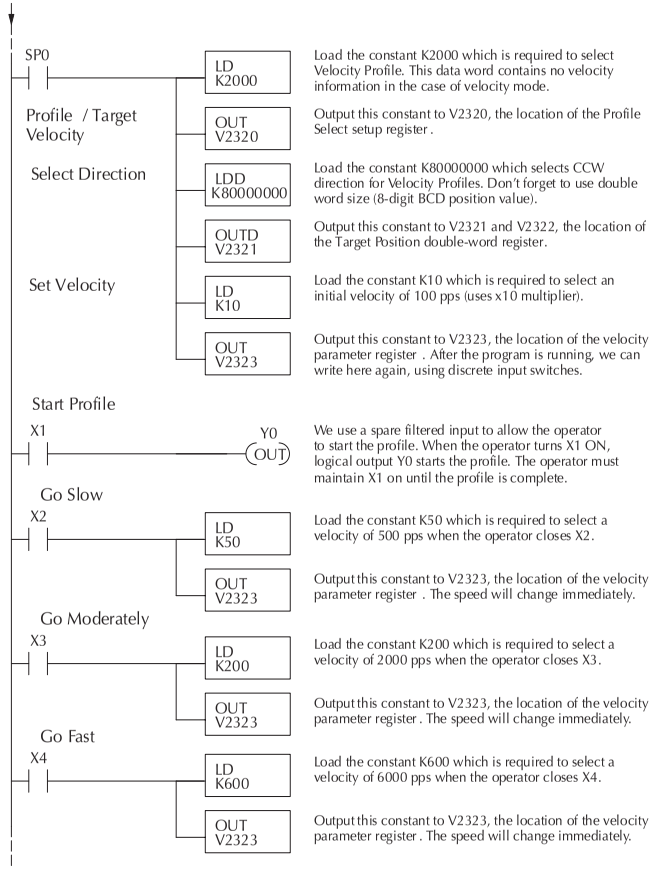

E

Pulse Output Error Codes

The Profile Parameter Table starting at V2320 (default location) defines the profile. Certain numbers will result in a error when the HSIO attempts to use the parameters to execute a move profile. When an error occurs, the HSIO writes an error code in V2326.

Most errors can be corrected by rechecking the Profile Parameter Table values. The error is automatically cleared at powerup and at Program-to-Run Mode transitions.

Error Code	Error Description
0000	No error
0010	Requested profile type code is invalid (must use 0, 1, 2, 8, or 9)
0020	Target Velocity is not in BCD
0021	Target Velocity is specified to be less than 40 pps
0022	Target Velocity is specified to be greater than 7,000 pps
0030	Target Position value is not in BCD
0040	Starting Velocity is not in BCD
0041	Starting Velocity is specified to be less than 40 pps
0042	Starting Velocity is specified to be greater than 1,000 pps
0050	Acceleration Time is not in BCD
0051	Acceleration Time is zero
0052	Acceleration Time is greater than 10 seconds
0060	Deceleration Time is not in BCD
0061	Deceleration Time is zero
0062	Deceleration Time is greater than 10 seconds

Troubleshooting Guide for HSIO Mode 30

If you're having trouble with Mode 30 operation, please study the following symptoms and possible causes. The most common problems are listed below:

Symptom: The stepper motor does not rotate.

Possible causes:

1. **Configuration** – Verify that the HSIO actually generates pulses on outputs Y0 and Y1. Watch the status LEDs for Y0 and Y1 when you start a motion profile. If the LEDs flicker on and off or are steadily on, the configuration is probably correct.
2. **Programming error** – If there are no pulses on Y0 or Y1 you may have a programming error. Check the contents of V2326 for an error code that may be generated when the PLC attempts to do the move profile. Error code descriptions are given above.
3. **Check target value** – The profile will not pulse if the count value is equal to the target value (ex. count = 0, target= 0)

4. **Wiring** – Verify the wiring to the stepper motor is correct. Remember the signal ground connection from the PLC to the motion system is required.
5. **Motion system** – Verify that the drive is powered and enabled. To verify the motion system is working, you can use Mode 60 operation (normal PLC inputs/outputs) as shown in the test program below. With it, you can manually control Y0 and Y1 with X0 and X1, respectively. Using an input simulator is ideal for this type of manual debugging. With the switches you can single-step the motor in either direction. If the motor will not move with this simple control, Mode 30 operation will not be possible until the problem with the motor drive system or wiring is corrected.
6. **Memory Error** – HSIO configuration parameters are stored in the CPU system memory. Corrupted data in this memory area can sometimes interfere with proper HSIO operation. If all other corrective actions fail, initializing the scratchpad memory may solve the problem. Use *Direct*SOFT 5 to select **PLC > Setup > Initialize Scratch Pad** from the Menu bar.

E

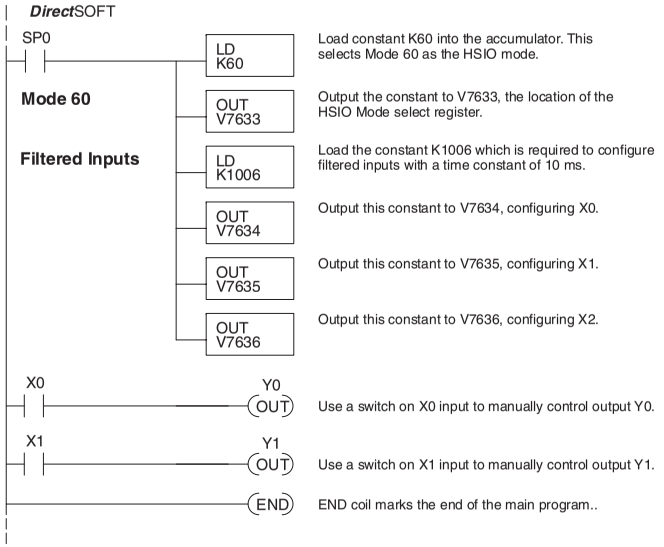

Symptom: The motor turns in the wrong direction.

Possible causes:

1. **Wiring** – If you have selected CW and CCW type operation, just swap the wires on Y0 and Y1 outputs.
2. **Direction control** – If you have selected Pulse and Direction type operation, just change the direction bit to the opposite state.

Mode 40: High-Speed Interrupts

Purpose

The HSIO Mode 40 provides a high-speed interrupt to the ladder program. This capability is provided for your choice of the following application scenarios:

- An external event needs to trigger an interrupt subroutine in the CPU. Using immediate I/O instructions in the subroutine is typical.
- An interrupt routine needs to occur on a timed basis which is different from the CPU scan time (either faster or slower). The timed interrupt is programmable, from 5 to 999 ms.

E

Functional Block Diagram

The HSIO circuit creates the high-speed interrupt to the CPU. The following diagram shows the external interrupt option, which uses X0. In this configuration X1 and X2 are normal filtered inputs.

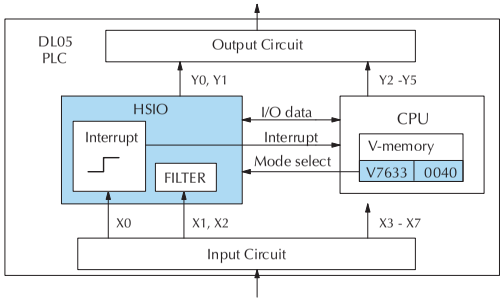

Alternately, you may configure the HSIO circuit to generate interrupts based on a timer, as shown below. In this configuration, inputs X0 through X2 are filtered inputs.

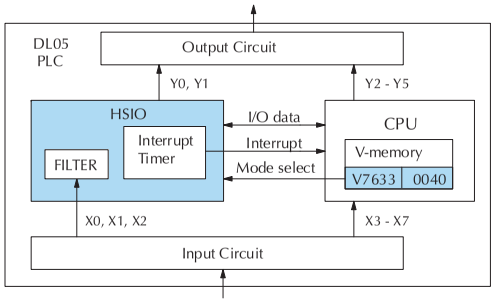

Setup for Mode 40

Recall that V7633 is the HSIO Mode Select register. Refer to the diagram below. Use BCD 40 in the lower byte of V7633 to select the High-Speed Counter Mode. The DL05 does not use bits 8 - 12, 14 and 15 in V7633.

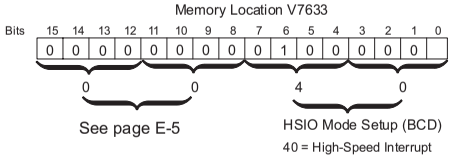

E

Choose the most convenient method of programming V7633 from the following:

- Include load and out instructions in your ladder program
- *Direct*SOFT 5's memory editor
- Use the Handheld Programmer D2–HPP

We recommend using the first method above so that the HSIO setup becomes an integral part of your application program. An example program later in this section shows how to do this.

Interrupts and the Ladder Program

Refer to the drawing below. The source of the interrupt may be external (X0), or the HSIO timer function. The setup parameter in V7634 serves a dual purpose:

- It selects between the two interrupt sources, external (X0) or an internal timer.
- In the case of the timer interrupt, it programs the interrupt timebase between 5 and 999 ms.

The resulting interrupt uses label INT 0 in the ladder program. Be sure to include the Enable Interrupt (ENI) instruction at the beginning of your program. Otherwise, the interrupt routine will not be executed.

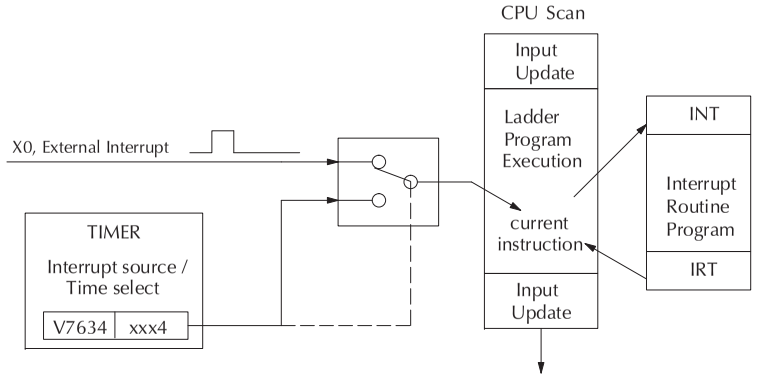

E

External Interrupt Timing Parameters

Signal pulses at X0 must meet certain timing criteria to guarantee an interrupt will result. Refer to the timing diagram below. The input characteristics of X0 are fixed (it is not a programmable filtered input). The minimum pulse width is 0.1 ms. There must be some delay before the next interrupt pulse arrives, such that the interrupt period cannot be smaller than 0.5 ms.

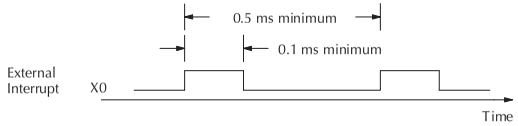

Timed Interrupt Parameters

When the timed interrupt is selected, the HSIO generates the interrupt to ladder logic. There is no interrupt "pulse width" in this case, but the interrupt period can be adjusted from 5 to 999 ms.

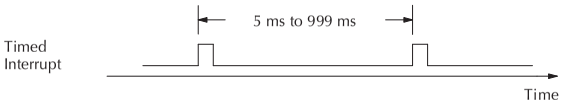

X Input/Timed INT Configuration

The configurable discrete input options for High-Speed Interrupt Mode are listed in the table below. Input X0 is the external interrupt when "0004" is in V7634. If you need a timed interrupt instead, then V7634 contains the interrupt time period, and input X0 becomes a filtered input (uses X1's filter time constant by default). Inputs X1, and X2, can only be filtered inputs, having individual configuration registers and filter time constants. However, X0 will have the same filter time constant as X1 when the timed interrupt is selected.

Input	Configuration Register	Function	Hex Code Required
X0	V7634	External Interrupt	0004 (default)
	Uses X1's time setting in V7635	Filtered Input (when timed interrupt is in use)	xxx4, xxx = INT timebase 5 - 999 ms (BCD)
X1	V7635	Filtered Input	xx06 (xx = filter time) 0 - 99 ms (BCD)
X2	V7636	Filtered Input	xx06 (xx = filter time) 0 - 99 ms (BCD)

Independent Timed Interrupt

Interrupt O1 is also available as an interrupt. This interrupt is independent of the HSIO features. Interrupt O1 uses an internal timer that is configured in V memory location V7647. The interrupt period can be adjusted from 5 to 9999 ms. Once the interrupt period is set and the interrupt is enabled in the program, the CPU will continuously call the interrupt routine based on the time setting in V7647.

Input	Configuration Register	Function	Hex Code Required
–	V7647	High-Speed Timed Interrupt	xxxx (xxxx = timer setting) 5- 9999 ms (BCD)

E

External Interrupt Program Example

The following program selects Mode 40, then selects the external interrupt option. Inputs X1 and X2 are configured as filtered inputs with a 10 ms time constant. The program is otherwise generic, and may be adapted to your application.

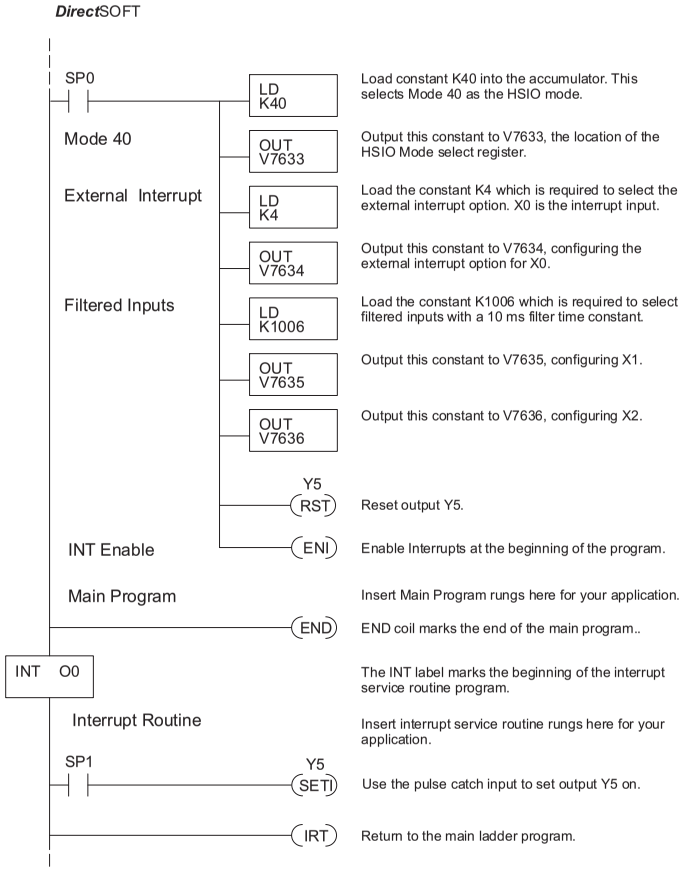

Timed Interrupt Program Example

The following program selects Mode 40, then selects the timed interrupt option, with an interrupt period of 100 ms.

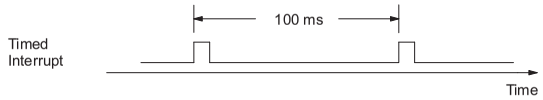

Inputs X0, X1, and X2, are configured as filtered inputs with a 10 ms time constant. Note that X0 uses the time constant from X1. The program is otherwise generic, and may be adapted to your application.

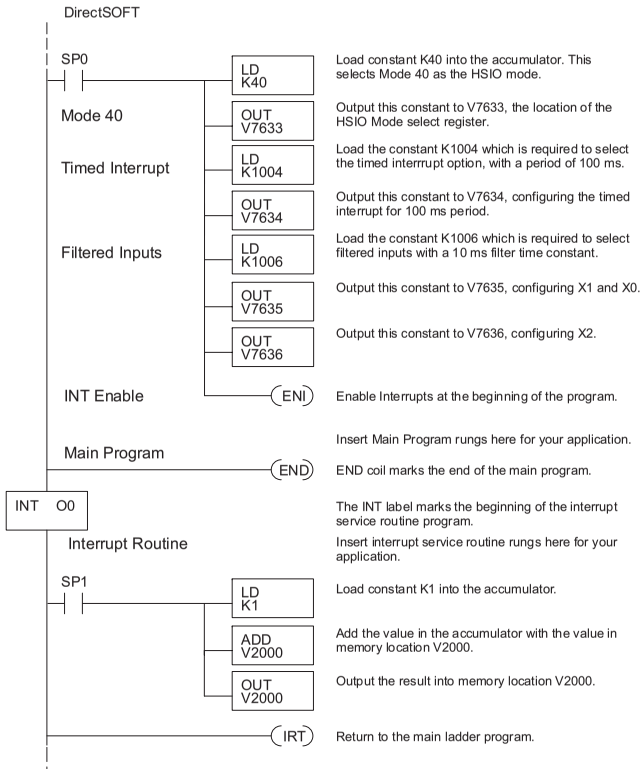

Mode 50: Pulse Catch Input

Purpose

The HSIO circuit has a pulse-catch mode of operation. It monitors the signal on input X0, preserving the occurrence of a narrow pulse. The purpose of the pulse catch mode is to enable the ladder program to "see" an input pulse which is shorter in duration than the current scan time. The HSIO circuit latches the input event on input X0 for one scan. This contact automatically goes off after one scan.

Functional Block Diagram

Refer to the block diagram below. When the lower byte of HSIO Mode register V7633 contains a BCD "50", the pulse catch mode in the HSIO circuit is enabled. X0 automatically becomes the pulse catch input, which sets the latch on each rising edge. The HSIO resets the latch at the end of the next CPU scan. Inputs X1 and X2 are available as filtered discrete inputs.

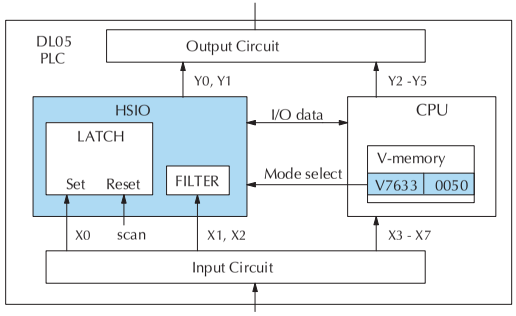

Pulse Catch Timing Parameters

Signal pulses at X0 must meet certain timing criteria to guarantee a pulse capture will result. Refer to the timing diagram below. The input characteristics of X0 are fixed (it is not a programmable filtered input). The minimum pulse width is 0.1 ms. There must be some delay before the next pulse arrives, such that the pulse period cannot be smaller than 0.5 ms. If the pulse period is smaller than 0.5 ms, the next pulse will be considered part of the current pulse.

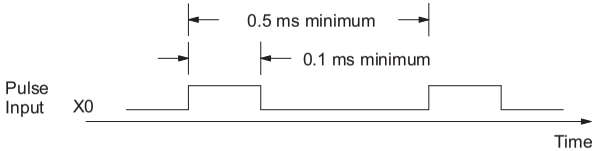

NOTE The pulse catch and filtered input functions are opposite in nature. The pulse catch feature on X0 seeks to capture narrow pulses, while the filter input feature on X1 and X2 seeks to reject narrow pulses.

Setup for Mode 50

Recall that V7633 is the HSIO Mode Select register. Refer to the diagram below. Use BCD 50 in the lower byte of V7633 to select the High-Speed Counter Mode. The DL05 does not use bits 8 - 12,14 and 15 in V7633.

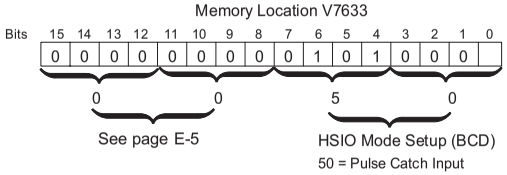

Choose the most convenient method of programming V7633 from the following:

- Include load and out instructions in your ladder program
- *Direct*SOFT 5's memory editor
- Use the Handheld Programmer D2–HPP

We recommend using the first method above so that the HSIO setup becomes an integral part of your application program. An example program later in this section shows how to do this.

X Input Configuration

The configurable discrete input options for Pulse Catch Mode are listed in the table below. Input X0 is the pulse input, and must have "0005" loaded into it configuration register V7634. Inputs X1 and X2 can only be filtered inputs. Each input has its own configuration register and filter time constant.

Input	Configuration Register	Function	Hex Code Required
X0	V7634	Pulse Catch Input	0005
X1	V7635	Filtered Input	xx06 (xx = filter time) 0 - 99 ms (BCD)
X2	V7636	Filtered Input	xx06 (xx = filter time) 0 - 99 ms (BCD)

Pulse Catch Program Example

The following program selects Mode 50, then programs the pulse catch code for X0. Inputs X1 and X2 are configured as filtered inputs with 10 and 30 ms time constants respectively. The program is otherwise generic, and may be adapted to your application.

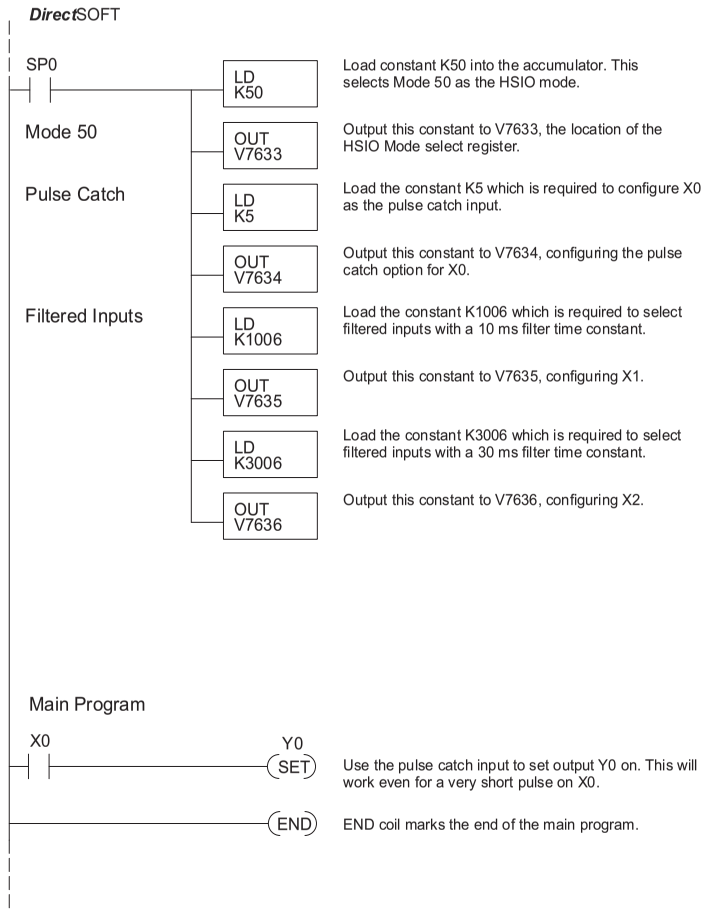

Mode 60: Discrete Inputs with Filter

Purpose

The last mode we will discuss for the HSIO circuit is Mode 60, Discrete Inputs with Filter. The purpose of this mode is to allow the input circuit to reject narrow pulses and accept wide ones, as viewed from the ladder program. This is useful in especially noisy environments or other applications where pulse width is important. In all other modes in this chapter, X0 to X2 usually support the mode functions as special inputs. Only spare inputs operate as filtered inputs by default. Now in Mode 60, all three inputs X0 through X2 function only as discrete filtered inputs.

E

Functional Block Diagram

Refer to the block diagram below. When the lower byte of HSIO Mode register V7633 contains a BCD "60", the input filter in the HSIO circuit is enabled. Each input X0 through X2 has its own filter time constant. The filter circuit assigns the outputs of the filters as logical references X0 through X2.

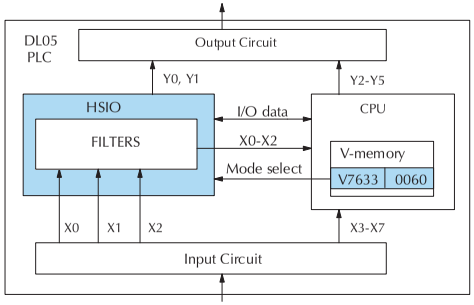

Input Filter Timing Parameters

Signal pulses at inputs X0 – X2 are filtered by using a delay time. In the figure below, the input pulse on the top line is longer than the filter time. The resultant logical input to ladder is phase-shifted (delayed) by the filter time on both rising and falling edges. In the bottom waveforms, the physical input pulse width is smaller than the filter time. In this case, the logical input to the ladder program remains in the OFF state (input pulse was filtered out).

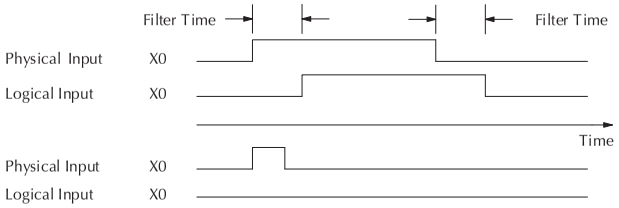

Setup for Mode 60

Recall that V7633 is the HSIO Mode Select register. Refer to the diagram below. Use BCD 60 in the lower byte of V7633 to select the High-Speed Counter Mode. The DL05 does not use bits 8 - 12,14 and 15 in V7633.

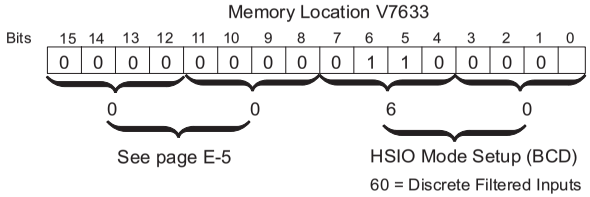

E

Choose the most convenient method of programming V7633 from the following:

- Include load and out instructions in your ladder program
- *Direct*SOFT 5's memory editor
- Use the Handheld Programmer D2–HPP

We recommend using the first method above so that the HSIO setup becomes an integral part of your application program. An example program later in this section shows how to do this.

X Input Configuration

The configurable discrete input options for Discrete Filtered Inputs Mode are listed in the table below. The filter time constant (delay) is programmable from 0 to 99 ms (the input acts as a normal discrete input when the time constant is set to 0). The code for this selection occupies the upper byte of the configuration register in BCD. We combine this number with the required "06" in the lower byte to get "xx06", where xx = 0 to 99. Input X0, X1, and X2 can only be filtered inputs. Each input has its own configuration register and filter time constant.

Input	Configuration Register	Function	Hex Code Required
X0	V7634	Filtered Input	xx06 (xx = filter delay time) 0 - 99 ms (BCD)
X1	V7635	Filtered Input	xx06 (xx = filter delay time) 0 - 99 ms (BCD)
X2	V7636	Filtered Input	xx06 (xx = filter delay time) 0 - 99 ms (BCD)

Filtered Inputs Program Example

The following program selects Mode 60, then programs the filter delay time constants for inputs X0, X1, and X2. Each filter time constant is different, for illustration purposes. The program is otherwise generic, and may be adapted to your application.

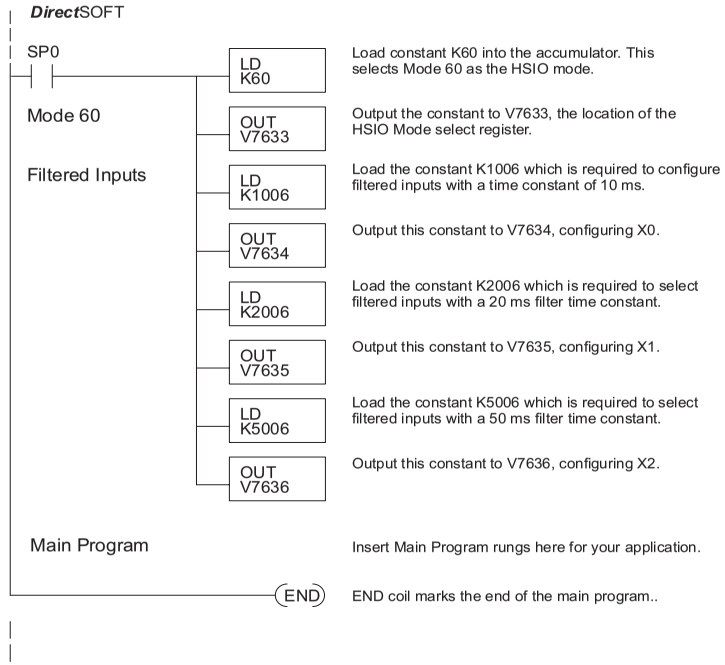

PLC Memory

APPENDIX F

In this Appendix

DL05 PLC Memory F–2

DL05 PLC Memory

When designing a PLC application, it is important for the PLC user to understand the different types of memory in the PLC. The DL05 PLC uses two types of memory: RAM and EEPROM. RAM is Random Access Memory and EEPROM is Electrically Erasable Programmable Read Only Memory. The PLC program is stored in EEPROM, and the PLC V-memory data is stored in RAM. There is also a small range of V-memory that can be copied to EEPROM which will be explained later.

The V-memory in RAM can be configured as either retentive or non-retentive.

Retentive memory is memory that is configured by the user to maintain values through a power cycle or a PROGRAM to RUN transition. Non-retentive memory is memory that is configured by the PLC user to clear data after a power cycle or a PROGRAM to RUN transition. The retentive ranges can be configured with either the handheld programmer using AUX57 or *Direct*SOFT 5 (PLC Setup).

The contents of RAM memory can be written to and read from for an infinite number of times, but RAM requires a power source to maintain the contents of memory. The contents of RAM are maintained by the internal power supply (5VDC) only while the PLC is powered by an external source, normally 120VAC. When power to the PLC is turned off, the contents of RAM are maintained by a"Super-Capacitor". If the Super-Capacitor ever discharges, the contents of RAM will be lost. The data retention time of the Super-Capacitor backed RAM is 3 weeks maximum, and 4 1/2 days minimum (at 60° C).

The contents of EEPROM memory can be read an infinite number of times, but there is a limit to the number of times it can be written to (typical specification is 100,000 writes). EEPROM does not require a power source to maintain the memory contents. It will retain the contents of memory indefinitely.

PLC user V-memory is stored in both volatile RAM and non-volatile EEPROM memory. Data being stored in RAM uses V400-V677, V1200-V7377 and V10000-V17777 which is volatile. Data stored in EEPROM uses V7400-V7577 and V700-V777, V7600-V7777 and V36000-V37777 are non-volatile.

Data values that must be retained for long periods of time, when the PLC is powered off, should be stored in EEPROM based V-memory. Since EEPROM is limited to the number of times it can be written to, it is suggested that transitional logic, such as a one-shot, be used to write the data one time instead on each CPU scan.

Data values that are continually changing or which can be initialized with program logic should be stored in RAM based V-memory.

Non-volatile V-memory in the DL05

There are 2 types of memory assigned for the non-volatile V-memory area. They are RAM and flash ROM (EEPROM). They are sharing the same V-memory addresses; however, **you can only use the MOV instruction, D2-HPP and *Direct*SOFT 5 to write data to the flash ROM.** When you write data to the flash ROM, the same data is also written to RAM. If you use other instructions, you can only write data to RAM. When you read data from the non-volatile V-memory area, the data is always read from RAM.

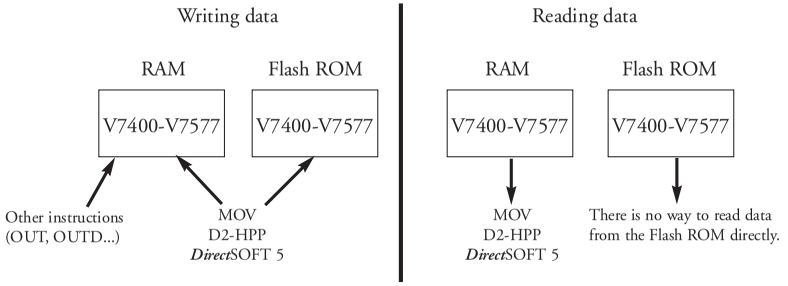

<u>After a power cycle, the PLC always copies the data in the flash ROM to the RAM.</u>

If you use the instructions except for the MOV instruction to write data into the non-volatile V-memory area, you only update the data in RAM. After a power cycle, the PLC copies the previous data from the flash memory to the RAM, so you may think the data you changed has disappeared. To avoid trouble such as this, we recommend that you use the MOV instruction.

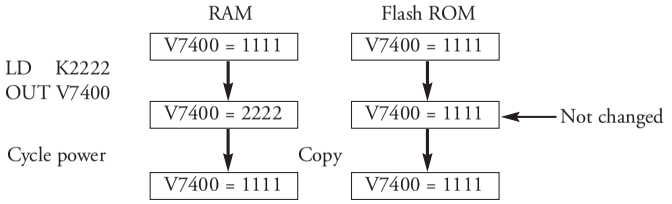

This appears to be previous data returning.

Notes

ASCII Table

APPENDIX G

In this Appendix

ASCII Conversion Table G–2

DECIMAL TO HEX TO ASCII CONVERTER											
DEC	HEX	ASCII	DEC	HEX	ASCII	DEC	HEX	ASCII	DEC	HEX	ASCII
0	00	NUL	32	20	space	64	40	@	96	60	`
1	01	SOH	33	21	!	65	41	A	97	61	a
2	02	STX	34	22	“	66	42	B	98	62	b
3	03	ETX	35	23	#	67	43	C	99	63	c
4	04	EOT	36	24	$	68	44	D	100	64	d
5	05	ENQ	37	25	%	69	45	E	101	65	e
6	06	ACK	38	26	&	70	46	F	102	66	f
7	07	BEL	39	27	‘	71	47	G	103	67	g
8	08	BS	40	28	(	72	48	H	104	68	h
9	09	TAB	41	29	)	73	49	I	105	69	i
10	0A	LF	42	2A	*	74	4A	J	106	6A	j
11	0B	VT	43	2B	+	75	4B	K	107	6B	k
12	0C	FF	44	2C	,	76	4C	L	108	6C	l
13	0D	CR	45	2D	-	77	4D	M	109	6D	m
14	0E	SO	46	2E	.	78	4E	N	110	6E	n
15	0F	SI	47	2F	/	79	4F	O	111	6F	o
16	10	DLE	48	30	0	80	50	P	112	70	p
17	11	DC1	49	31	1	81	51	Q	113	71	q
18	12	DC2	50	32	2	82	52	R	114	72	r
19	13	DC3	51	33	3	83	53	S	115	73	s
20	14	DC4	52	34	4	84	54	T	116	74	t
21	15	NAK	53	35	5	85	55	U	117	75	u
22	16	SYN	54	36	6	86	56	V	118	76	v
23	17	ETB	55	37	7	87	57	W	119	77	w
24	18	CAN	56	38	8	88	58	X	120	78	x
25	19	EM	57	39	9	89	59	Y	121	79	y
26	1A	SUB	58	3A	:	90	5A	Z	122	7A	z
27	1B	ESC	59	3B	;	91	5B	[	123	7B	{
28	1C	FS	60	3C	<	92	5C	\	124	7C	|
29	1D	GS	61	3D	=	93	5D	]	125	7D	}
30	1E	RS	62	3E	>	94	5E	^	126	7E	~
31	1F	US	63	3F	?	95	5F	_	127	7F	DEL

Product Weights

APPENDIX H

In This Appendix:

Product Weight Table H–2

Product Weight Table

PLC	Weight
D0–05AR	0.60 lb. (272g)
D0–05DR	0.60 lb. (272g)
D0–05AD	0.58 lb. (263g)
D0–05DD	0.56 lb. (254g)
D0–05AA	0.60 lb. (272g)
D0–05DA	0.60 lb. (272g)
D0–05DR–D	0.56 lb. (254g)
D0–05DD–D	0.58 lb. (263g)

Numbering Systems

APPENDIX I

In this Appendix

Introduction I–2
Binary Numbering System I–2
Hexadecimal Numbering System I–3
Octal Numbering System I–4
Binary Coded Decimal (BCD) Numbering System I–5
Real (Floating Point) Numbering System I–5
BCD/Binary/Decimal/Hex/Octal -What is the Difference? I–6
Data Type Mismatch I–7
Signed vs. Unsigned Integers I–8
AutomationDirect.com Products and Data Types I–9

Introduction

As almost anyone who uses a computer is somewhat aware, the actual operations of a computer are done with a binary number system. Traditionally, the two possible states for a binary system are represented by the digits for "zero" (0) and "one" (1) although "off" and "on" or sometimes "no" and yes" are closer to what is actually involved. Most of the time a typical PC user has no need to think about this aspect of computers, but every now and then one gets confronted with the underlying nature of the binary system.

A PLC user should be more aware of the binary system specifically the PLC programmer. This appendix will provide an explanation of the numbering systems most commonly used by a PLC.

Binary Numbering System

Computers, including PLCs, use the Base 2 numbering system, which is called Binary and often called Decimal. Like in a computer there are only two valid digits a PLC relies on, zero and one, or off and on respectively. You would think that it would be hard to have a numbering system built on Base 2 with only two possible values, but the secret is by encoding using several digits.

Each digit in the base 2 system when referenced by a computer is called a bit. When four bits are grouped together, they form what is known as a nibble. Eight bits or two nibbles would be a byte. Sixteen bits or two bytes would be a word (Table 1). Thirty-two bits or two words is a double word.

Word															
Byte								Byte							
Nibble				Nibble				Nibble				Nibble			
0	0	0	0	0	0	0	0	0	0	0	0	0	0	0	0

Table 1

Binary is not "natural" for us to use since we grow up using the base 10 system. Base 10 uses the numbers 0-9, as we are all well aware. From now on, the different bases will be shown as a subscripted number following the number. Example; 10 decimal would be 10_{10}.

Table 2 shows how base 2 numbers relate to their decimal equivalents.

A nibble of 1001_2 would be equal to a decimal number 9 ($1*2^3 + 1*2^0$ or $8_{10} + 1_{10}$). A byte of 11010101_2 would be equal to 213 ($1*2^7 + 1*2^6 + 1*2^4 + 1*2^2 + 1*2^0$ or $128_{10} + 64_{10} + 16_{10} + 4_{10} + 1_{10}$).

Binary/Decimal Bit Pattern																
Bit #	15	14	13	12	11	10	9	8	7	6	5	4	3	2	1	0
Power	2^{15}	2^{14}	2^{13}	2^{12}	2^{11}	2^{10}	2^9	2^8	2^7	2^6	2^5	2^4	2^3	2^2	2^1	2^0
Decimal Bit Value	32678	16384	8192	4096	2048	1024	512	256	128	64	32	16	8	4	2	1
Max Value	65535_{10}															

Table 2

Hexadecimal Numbering System

The binary numbering system can be difficult and cumbersome to interpret for some users. Therefore, the hexadecimal numbering system was developed as a convenience for humans since the PLC (computer) only understands pure binary. The hexadecimal system is useful because it can represent every byte (8 bits) as two consecutive hexadecimal digits. It is easier for us to read hexadecimal numbers than binary numbers.

The hexadecimal numbering system uses 16 characters (base 16) to represent values. The first ten characters are the same as our decimal system, 0-9, and the first six letters of the alphabet, A-F. Table 3 lists the first eighteen decimal numbers; 0-17 in the left column and the equivalent hexadecimal numbers are shown in the right column.

Decimal	Hex	Decimal	Hex
0	0	9	9
1	1	10	A
2	2	11	B
3	3	12	C
4	4	13	D
5	5	14	E
6	6	15	F
7	7	16	10
8	8	17	11

Table 3

Note that "10" and "11" in hex are not the same as "10" and "11" in decimal. Only the first ten numbers 0-9 are the same in the two representations. For example, consider the hex number "D8AF". To evaluate this hex number use the same method used to write decimal numbers. Each digit in a decimal number represents a multiple of a power of ten (base 10). Powers of ten increase from right to left. For example, the decimal number 365 means $3x10^2 + 6x10 + 5$. In hex each digit represents a multiple of a power of sixteen (base 16). Therefore, the hex number D8AF translated to decimal means $13x16^3 + 8x16^2 + 10x16 + 15 = 55471$. However, going through the arithmetic for hex numbers in order to evaluate them is not really necessary. The easier way is to use the calculator that comes as an accessory in Windows. It can convert between decimal and hex when in "Scientific" view.

Note that a hex number such as "365" is not the same as the decimal number "365". Its actual value in decimal terms is $3x16^2$ 6x16 + 5 = 869. To avoid confusion, hex numbers are often labeled or tagged so that their meaning is clear. One method of tagging hex numbers is to append a lower case "h" at the end. Another method of labeling is to precede the number with 0x. Thus, the hex number "D8AF" can also be written "D8AFh", where the lower case "h" at the end is just a label to make sure we know that it is a hex number. Also, D8AF can be written with a labeling prefix as "0xD8AF".

Octal Numbering System

Many of the early computers used the octal numbering system for compiled printouts. Today, the PLC is about the only device that uses the Octal numbering system. The octal numbering system uses 8 values to represent numbers. The values are 0-7 being Base 8. Table 4 shows the first 31 decimal digits in octal. Note that the octal values are 0-7, 10-17, 20-27, and 30-37.

Octal	Decimal	Octal	Decimal
0	0	20	16
1	1	21	17
2	2	22	18
3	3	23	19
4	4	24	20
5	5	25	21
6	6	26	22
7	7	27	23
10	8	30	24
11	9	31	25
12	10	32	26
13	11	33	27
14	12	34	28
15	13	35	29
16	14	36	30
17	15	37	31

Table 4

This follows the *Direct*LOGIC PLCs. Refer to Chapter 3 bit maps and notice that the memory addresses are numbered in octal, as well as each bit. The octal system is much like counting in the decimal system without the digits 8 and 9 being available.

The general format for four digits of the octal number is:

$$(d \times 8^0) + (d \times 8^1) + (d \times 8^2) + (d \times 8^3)$$

where "d" means digit. This is the same format used in the binary, decimal, or hexadecimal systems except that the base number for octal is 8.

Using the powers of expansion, the example below shows octal 4730 converted to decimal.

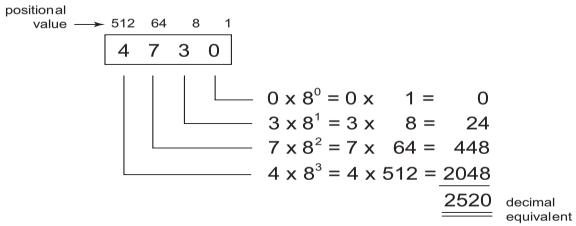

Binary Coded Decimal (BCD) Numbering System

BCD is a numbering system where four bits are used to represent each decimal digit. The binary codes corresponding to the hexadecimal digits A-F are not used in the BCD system. For this reason numbers cannot be coded as efficiently using the BCD system. For example, a byte can represent a maximum of 256 different numbers (i.e. 0-255) using normal binary, whereas only 100 distinct numbers (i.e. 0-99) could be coded using BCD. Also, note that BCD is a subset of hexadecimal and neither one does negative numbers.

	BCD Bit Pattern															
Bit #	15	14	13	12	11	10	9	8	7	6	5	4	3	2	1	0
Power	10^3				10^2				10^1				10^0			
Bit Value	8	4	2	1	8	4	2	1	8	4	2	1	8	4	2	1
Max Value	9				9				9				9			

Table 5

One plus for BCD is that it reads like a decimal number, whereas 867 in BCD would mean 867 decimal. No conversion is needed; however, within the PLC, BCD calculations can be performed if numbers are adjusted to BCD after normal binary arithmetic.

Real (Floating Point) Numbering System

The terms Real and floating-point both describe IEEE-754 floating point arithmetic. This standard specifies how single precision (32 bit) and double precision (64 bit) floating point numbers are to be represented as well as how arithmetic should be carried out on them. Most PLCs use the 32-bit format for floating point (or Real) numbers which will be discussed here.

	Real (Floating Point 32) Bit Pattern															
Bit #	31	30	29	28	27	26	25	24	23	22	21	20	19	18	17	16
	Sign	Exponent								Mantissa						
Bit #	15	14	13	12	11	10	9	8	7	6	5	4	3	2	1	0
	Mantissa (continues from above)															

Table 6

Floating point numbers which *Direct*LOGIC PLCs use have three basic components: sign, exponent and mantissa. The 32 bit word required for the IEEE standard floating point numbers is shown in Table 6. It is represented as a number from 0 to 31, left to right. The first bit (31) is the sign bit, the next eight bits (30-23) are the exponent bits and the final 23 bits (22-0) are the fraction bits.

In summary:

The sign bit is either "0" for positive or "1" for negative;

The exponent uses base 2;

The first bit of the mantissa is typically assumed to be "1.*fff*", where "*f*" is the field of fraction bits.

The Internet can provide a more in-depth explanation of the floating point numbering system. One website to look at is:

http://www.psc.edu/general/software/packages/ieee/ieee.html

BCD/Binary/Decimal/Hex/Octal - What is the Difference?

Sometimes there is confusion about the differences between the data types used in a PLC. The PLC's native data format is BCD, while the I/O numbering system is octal. Other numbering formats used are binary and Real. Although data is stored in the same manner (0's and 1's), there are differences in the way that the PLC interprets it.

While all of the formats rely on the base 2 numbering system and bit-coded data, the format of the data is dissimilar. Table 7 below shows the bit patterns and values for various formats.

Binary/Decimal Bit Pattern																
Bit #	15	14	13	12	11	10	9	8	7	6	5	4	3	2	1	0
Decimal Bit Value	32678	16384	8192	4096	2048	1024	512	256	128	64	32	16	8	4	2	1
Max Value	65535															
Hexadecimal Bit Pattern																
Bit #	15	14	13	12	11	10	9	8	7	6	5	4	3	2	1	0
Decimal Bit Value	8	4	2	1	8	4	2	1	8	4	2	1	8	4	2	1
Max Value	F				F				F				F			
BCD Bit Pattern																
Bit #	15	14	13	12	11	10	9	8	7	6	5	4	3	2	1	0
Decimal Bit Value	8	4	2	1	8	4	2	1	8	4	2	1	8	4	2	1
Max Value	9				9				9				9			
Octal Bit Pattern																
Bit #	15	14	13	12	11	10	9	8	7	6	5	4	3	2	1	0
Bit Value	1	4	2	1	4	2	1	4	2	1	4	2	1	4	2	1
Max Value	1	7			7			7			7			7		
Real (Floating Point 32) Bit Pattern																
Bit #	31	30	29	28	27	26	25	24	23	22	21	20	19	18	17	16
	Sign	Exponent								Mantissa						
Bit #	15	14	13	12	11	10	9	8	7	6	5	4	3	2	1	0
	Mantissa (continued from above)															

Table 7

As seen in Table 7, the BCD and hexadecimal formats are similar, although the maximum number for each grouping is different (9 for BCD and F for hexadecimal). This allows both formats to use the same display method. The unfortunate side effect is that unless the data type is documented, it's difficult to know what the data type is unless it contains the letters A-F.

Data Type Mismatch

Data type mismatching is a common problem when using an operator interface. Diagnosing it can be a challenge until you identify the symptoms. Since the PLC uses BCD as the native format, many people tend to think it is interchangeable with binary (unsigned integer) format. This is true to some extent, but not in this case. Table 8 shows how BCD and binary numbers differ.

Data Type Mismatch												
Decimal	0	1	2	3	4	5	6	7	8	9	10	11
BCD	0000	0001	0010	0011	0100	0101	0110	0111	1000	1001	0001 0000	0001 0001
Binary	0000	0001	0010	0011	0100	0101	0110	0111	1000	1001	0000 1010	0000 1011

Table 8

As the table shows, BCD and binary share the same bit pattern up until you get to the decimal number 10. Once you get past 10, the bit pattern changes. The BCD bit pattern for the decimal 10 is actually equal to a value of 16 in binary, causing the number to jump six digits by when viewing it as the BCD. With larger numbers, the error multiplies. Binary values from 10 to 15 Decimal are actually invalid for the BCD data type.

Looking at a larger number, such as the value shown in Table 9, both the BCD bit pattern and the decimal bit pattern correspond to a base 10 value of 4095_{10}. If bit patterns are read, or interpreted, in a different format than what is used to write them, the data will not be correct. For instance, if the BCD bit pattern is interpreted as a decimal (binary) bit pattern, the result is a base 10 value of 16533_{10}. Similarly, if you try to view the decimal (binary) bit pattern as a BCD value, it is not a valid BCD value at all, but could be represented in hexadecimal as 0xFFF.

Base 10 Value	BCD Bit Pattern	Binary Bit Pattern
4095	0100 0000 1001 0101	1111 1111 1111

Table 9

Look at the following example and note the same value represented by the different numbering systems.

0100	0011	Binary	0001	0010 0011 0100	Binary
6	7	Decimal	4	6 6 0	Decimal
4	3	Hex	1	2 3 4	Hex
0110	0111	BCD	0100	0110 0110 0000	BCD
1 0 3		Octal	1	1 0 6 4	Octal

Signed vs. Unsigned Integers

So far, we have dealt with unsigned data types only. Now we will deal with signed data types (negative numbers). The BCD and hexadecimal numbering systems do not use signed data types.

In order to signify that a number is negative or positive, we must assign a bit to it. Usually, this is the Most Significant Bit (MSB) as shown in Table 10. For a 16-bit number, this is bit 15. This means that for 16-bit numbers we have a range of -32767 to 32767.

Bit #	15	14	13	12	11	10	9	8	7	6	5	4	3	2	1	0
	MSB															LSB

Table 10

There are two ways to encode a negative number: two's complement and Magnitude Plus sign. The two methods are not compatible.

The simplest method to represent a negative number is to use one bit of the PLC word as the sign of a number while the remainder of the word gives its magnitude. It is general convention to use the most significant bit (MSD) as the sign bit: a 1 will indicate a negative, and a 0 a positive number. Thus, a 16 bit word allows numbers in the range ±32767. Table 12 shows a representations of 100 and a representation of -100 in this format.

Magnitude Plus Sign	
Decimal	**Binary**
100	0000 0000 0110 0100
-100	1000 0000 0110 0100

Table 11

Two's complement is a bit more complicated. A simple formula for two's complement is to invert the binary and add one (see Table 12). Basically, 1's are being changed to 0's and all 0's are being changed to 1.

Two's Complement	
Decimal	**Binary**
100	0000 0000 0110 0100
-100	1111 1111 1001 1100

Table 12

More information about 2's complement can be found on the Internet at the following websites:

http://www.evergreen.edu/biophysics/technotes/program/2s_comp.htm

AutomationDirect.com Products and Data Types

*Direct*LOGIC PLCs

The *Direct*LOGIC PLC family uses the octal numbering system for all addressing which includes: inputs, outputs, internal V-memory locations, timers, counters, internal control relays (bits), etc. Most data in the PLC, including timer and counter current values, is in BCD format by default. User data in V-memory locations may be stored in other data types if it is changed by the programmer, or comes from some external source, such as an operator interface. Any manipulation of data must use instructions appropriate for that data type which includes: Load instructions, Math instructions, Out box instructions, comparison instructions, etc. In many cases, the data can be changed from one data type to another, but be aware of the limitations of the various data types when doing so. For example, to change a value from BCD to decimal (binary), use a BIN instruction box. To change from BCD to a real number, use a BIN and a BTOR instruction box. When using Math instructions, ***the data types must match.*** For example, a BCD or decimal (binary) number cannot be added to a real number, and a BCD number cannot be added to a decimal (binary) number. If the data types are mismatched, the results of any math operation will be meaningless.

To simplify making, number conversions Intelligent Box (IBox) Instructions are available with *Direct*SOFT 5. These instruction descriptions are located in Volume 1, Chapter 5, in the Math IBox group.

Most *Direct*LOGIC analog modules can be setup to give the raw data in decimal (binary) format or in BCD format, so it is necessary to know how the module is being used. *Direct*LOGIC PID is another area where not all values are in BCD. In fact, nearly all of the PID parameters are stored in the PLC memory as decimal (binary) numbers.

NOTE: The PID algorithm uses magnitude plus sign for negative decimal (binary) numbers, whereas the standard math functions use two's complement. This can cause confusion while debugging a PID loop.

When using the Data View in *Direct*SOFT 5, be certain that the proper format is selected for the element to be viewed. The data type and length is selected using the drop-down boxes at the top of the Data View window. Also notice that BCD is called BCD/Hex. Remember that BCD is a subset of hexadecimal so they share a display format even though the values may be different. This is where good documentation of the data type stored in memory is crucial.

C-more/C-more Micro-Graphic Panels

In the C-more and C-more Micro-Graphic HMI operator panels, the 16-bit BCD format is listed as "BCD int 16". Binary format is either "Unsigned int 16" or "Signed int 16" depending on whether or not the value can be negative. Real number format is "Floating PT 32".

More available formats are, "BCD int 32", "Unsigned int 32" and "Signed int 32".

Notes

European Union Directives (CE)

Appendix J

In This Appendix:

European Union (EU) Directives J–2
Basic EMC Installation Guidelines J–5

European Union (EU) Directives

NOTE: The information contained in this section is intended as a guideline and is based on our interpretation of the various standards and requirements. Since the actual standards are issued by other parties, and in some cases governmental agencies, the requirements can change over time without advance warning or notice. Changes or additions to the standards can possibly invalidate any part of the information provided in this section.

This area of certification and approval is absolutely vital to anyone who wants to do business in Europe. One of the key tasks that faced the EU member countries and the European Economic Area (EEA) was the requirement to bring several similar yet distinct standards together into one common standard for all members. The primary purpose of a single standard was to make it easier to sell and transport goods between the various countries and to maintain a safe working and living environment. The Directives that resulted from this merging of standards are now legal requirements for doing business in Europe. Products that meet these Directives are required to have a CE mark to signify compliance.

Member Countries

As of January 1, 2007, the members of the EU are Austria, Belgium, Bulgaria, Cyprus, Czech Republic, Denmark, Estonia, Finland, France, Germany, Greece, Hungary, Ireland, Italy, Latvia, Lithonia, Luxembourg, Malta, Netherlands, Poland, Portugal,Romania, Slovakia, Slovenia, Spain, Sweden, and United Kingdom. Iceland, Liechtenstein, and Norway together with the EU members make up the European Economic Area (EEA) and all are covered by the Directives.

J

Applicable Directives

There are several Directives that apply to our products. Directives may be amended, or added, as required.

- **Electromagnetic Compatibility Directive (EMC)** — this Directive attempts to ensure that devices, equipment, and systems have the ability to function satisfactorily in an electromagnetic environment without introducing intolerable electromagnetic disturbance to anything in that environment.
- **Machinery Safety Directive** — this Directive covers the safety aspects of the equipment, installation, etc. There are several areas involved, including testing standards covering both electrical noise immunity and noise generation.
- **Low Voltage Directive** — this Directive is also safety related and covers electrical equipment that has voltage ranges of 50–1000VAC and/or 75–1500VDC.
- **Battery Directive** — this Directive covers the production, recycling, and disposal of batteries.

Compliance

Certain standards within each Directive already require mandatory compliance. The EMC Directive, which has gained the most attention, became mandatory as of January 1, 1996. The Low Voltage Directive became mandatory as of January 1, 1997.

Ultimately, we are all responsible for our various pieces of the puzzle. As manufacturers, we must test our products and document any test results and/or installation procedures that are necessary to comply with the Directives. As a machine builder, you are responsible for

installing the products in a manner which will ensure compliance is maintained. You are also responsible for testing any combinations of products that may (or may not) comply with the Directives when used together. The end user of the products must comply with any Directives that may cover maintenance, disposal, etc. of equipment or various components. *Although we strive to provide the best assistance available, it is impossible for us to test all possible configurations of our products with respect to any specific Directive. Because of this, it is ultimately your responsibility to ensure that your machinery (as a whole) complies with these Directives and to keep up with applicable Directives and/or practices that are required for compliance.*

As of August 1, 2002, the DL05, DL06, DL205, DL206, DL305, and DL405 PLC systems manufactured by Koyo Electronics Industries, FACTS Engineering or HOST Engineering when properly installed and used, conform to the Electromagnetic Compatibility (EMC), Low Voltage Directive, and Machinery Directive requirements of the following standards.

- **EMC Directive Standards relevant to PLCs**
  EN50081–1 Generic emission standard for residential, commercial, and light industry
  EN50081–2 Generic emission standard for industrial environment.
  EN50082–1 Generic immunity standard for residential, commercial, and light industry
  EN50082–2 Generic immunity standard for industrial environment.
- **Low Voltage Directive Standards Applicable to PLCs**
  EN61010–1 Safety requirements for electrical equipment for measurement, control, and laboratory use.
- **Product Specific Standard for PLCs**
  EN61131–2 Programmable controllers, equipment requirements and tests. This standard replaces the above generic standards for immunity and safety. However, the generic emissions standards must still be used in conjunction with the following standards:
  -EN 61000-3-2 Harmonics
  -EN 61000-3-2 Fluctuations
- **Warning on Electrostatic Discharge (ESD)**
  We recommend that all personnel take necessary precautions to avoid the risk of transferring static charges to inside the control cabinet, and clear warnings and instructions should be provided on the cabinet exterior. Such precautions may include, the use of earth straps, similar devices or the powering off of the equipment inside the enclosure before the door is opened.
- **Warning on Radio Interference (RFI)**
  This is a class A product. In a domestic environment this product may cause radio interference in which case the user may be required to take adequate measures.

J

General Safety

- External switches, circuit breaker or external fusing, are required for these devices.
- The switch or circuit breaker should be mounted near the PLC equipment.

AutomationDirect is currently in the process of changing their testing procedures from the generic standards to the product specific standards.

Special Installation Manual

The installation requirements to comply with the requirements of the Machinery Directive, EMC Directive and Low Voltage Directive are slightly more complex than the normal installation requirements found in the United States. To help with this, we have published a special manual which you can order:

- **DA–EU–M** – EU Installation Manual that covers special installation requirements to meet the EU Directive requirements. Order this manual to obtain the most up-to-date information.

Other Sources of Information

Although the EMC Directive gets the most attention, other basic Directives, such as the Machinery Directive and the Low Voltage Directive, also place restrictions on the control panel builder. Because of these additional requirements it is recommended that the following publications be purchased and used as guidelines:

- BSI publication TH 42073: February 1996 – covers the safety and electrical aspects of the Machinery Directive
- EN 60204–1:1992 – General electrical requirements for machinery, including Low Voltage and EMC considerations
- IEC 1000–5–2: EMC earthing and cabling requirements
- IEC 1000–5–1: EMC general considerations

It may be possible for you to obtain this information locally; however, the official source of applicable Directives and related standards is:

The Office for Official Publications of the European Communities L–2985 Luxembourg; quickest contact is via the World Wide Web at http://euro–op.eu.int/indexn.htm

Another source is:

British Standards Institution – Sales Department

Linford Wood

Milton Keynes

MK14 6LE

United Kingdom; the quickest contact is via the World Wide Web at http://www.bsi.org.uk

Basic EMC Installation Guidelines

Enclosures

The simplest way to meet the safety requirements of the Machinery and Low Voltage Directives is to house all control equipment in an industry standard lockable steel enclosure. This normally has an added benefit because it will also help ensure that the EMC characteristics are well within the requirements of the EMC Directive. Although the RF emissions from the PLC equipment, when measured in the open air, are well below the EMC Directive limits, certain configurations can increase emission levels. Holes in the enclosure, for the passage of cables or to mount operator interfaces, will often increase emissions.

AC Mains Filters

The DL305 AC powered base power supplies require extra mains filtering to comply with the EMC Directive on conducted RF emissions. All PLC equipment has been tested with filters from Schaffner, which reduce emissions levels if the filters are properly grounded (earth ground). A filter with a current rating suitable to supply all PLC power supplies and AC input modules should be selected. We suggest the FN2080 for DL305 systems.

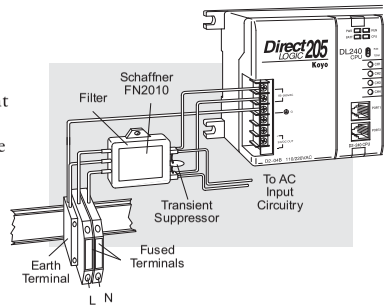

NOTE: Very few mains filters can reduce problem emissions to negligible levels. In some cases, filters may increase conducted emissions if not properly matched to the problem emissions.

Suppression and Fusing

In order to comply with the fire risk requirements of the Low Voltage and Machinery Directive electrical standards EN 61010–1, and EN 60204–1, by limiting the power into "unlimited" mains circuits with power leads reversed, it is necessary to fuse both AC and DC supply inputs. You should also install a transient voltage suppressor across the power input connections of the PLC. Choose a suppressor such as a metal oxide varistor, with a rating of 275VAC working voltage for 230V nominal supplies (150VAC working voltage for 115V supplies) and high energy capacity (eg. 140 joules).

Transient suppressors must be protected by fuses and the capacity of the transient suppressor must be greater than the blow characteristics of the fuses or circuit breakers to avoid a fire risk. A recommended AC supply input arrangement for Koyo PLCs is to use twin 3 amp TT fused terminals with fuse blown indication, such as DINnectors DN–F10L terminals, or twin circuit breakers, wired to a Schaffner FN2010 filter or equivalent, with high energy transient suppressor soldered directly across the output terminals of the filter. PLC system inputs should also be protected from voltage impulses by deriving their power from the same fused, filtered, and surge-suppressed supply.

Internal Enclosure Grounding

A heavy-duty star earth terminal block should be provided in every cubicle for the connection of all earth ground straps, protective earth ground connections, mains filter earth ground wires, and mechanical assembly earth ground connections. This should be installed to comply with safety and EMC requirements, local standards, and the requirements found in IEC —. The Machinery Directive also requires that the common terminals of PLC input modules, and common supply side of loads driven from PLC output modules should be connected to the protective earth ground terminal.

Equi–potential Grounding

Adequate site earth grounding must be provided for equipment containing modern electronic circuitry. The use of isolated earth electrodes for electronic systems is forbidden in some countries. Make sure you check any requirements for your particular destination. IEC 1000–5–2 covers equi-potential bonding of earth grids adequately, but special attention should be given to apparatus and control cubicles that contain I/O devices, remote I/O racks, or have inter-system communications with the primary PLC system enclosure. An equi-potential bond wire must be provided alongside all serial communications cables, and to any separate items of the plant which contain I/O devices connected to the PLC. The diagram shows an example of four physical locations connected by a communications cable.

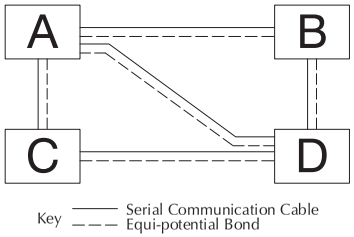

Communications and Shielded Cables

Good quality 24 AWG minimum twisted-pair shielded cables, with overall foil and braid shields are recommended for analog cabling and communications cabling outside of the PLC enclosure. To date it has been a common practice to only provide an earth ground for one end of the cable shield in order to minimize the risk of noise caused by earth ground loop currents between apparatus. The procedure of only grounding one end, which primarily originated as a result of trying to reduce hum in audio systems, is no longer applicable to the complex industrial environment. Shielded cables are also efficient emitters of RF noise from the PLC system, and can interact in a parasitic manner in networks and between multiple sources of interference. The recommendation is to use shielded cables as electrostatic "pipes" between apparatus and systems, and to run heavy gauge equi-potential bond wires alongside all shielded cables. When a shielded cable runs through the metallic wall of an enclosure or machine, it is recommended in IEC 1000–5–2 that the shield should be connected over its full perimeter to the wall, preferably using a conducting adapter, and not via a pigtail wire

connection to an earth ground bolt. Shields must be connected to every enclosure wall or machine cover that they pass through.

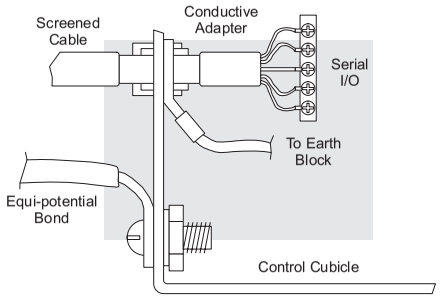

Analog and RS232 Cables

Providing an earth ground for both ends of the shield for analog circuits provides the perfect electrical environment for the twisted pair cable as the loop consists of signal and return, in a perfectly balanced circuit arrangement, with connection to the common of the input circuitry made at the module terminals. RS232 cables are handled in the same way.

Multidrop Cables

RS422 twin twisted pair, and RS485 single twisted pair cables also require a 0V link, which has often been provided in the past by the cable shield. It is now recommended that you use triple twisted pair cabling for RS422 links, and twin twisted pair cable for RS485 links. This is because the extra pair can be used as the 0V inter-system link. With loop DC power supplies earth grounded in both systems, earth loops are created in this manner via the inter-system 0v link. The installation guides encourage earth loops, which are maintained at a low impedance by using heavy equi-potential bond wires. **To account for non–European installations using single-end earth grounds, and sites with far from ideal earth ground characteristics, we recommend the addition of 100 ohm resistors at each 0V link connection in network and communications cables.**

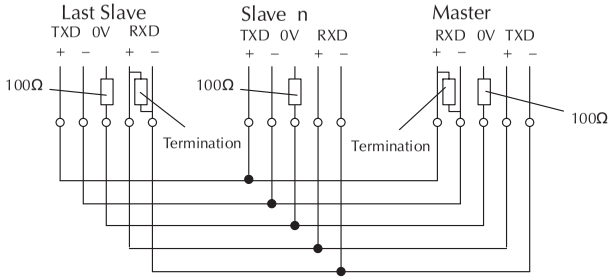

Shielded Cables within Enclosures

When you run cables between PLC items within an enclosure which also contains susceptible electronic equipment from other manufacturers, remember that these cables may be a source of RF emissions. There are ways to minimize this risk. Standard data cables connecting PLCs and/or operator interfaces should be routed well away from other equipment and their associated cabling. You can make special serial cables where the cable shield is connected to the enclosure's earth ground at both ends, the same way as external cables are connected.

Analog Modules and RF Interference

The readings from all analog modules will be affected by the use of devices that exhibit high field strengths, such as mobile phones and motor drives.

All Automationdirect products are tested to withstand field strength levels up to 10V/m, which is the maximum required by the relevant EU standards. While all products passs this test, analog modules will typically exhibit deviations of their readings. This is quite normal, however, systems designers should be aware of this and plan accordingly.

When assembling a control system using analog modules, these issues must be adhered to and should be integrated into the system design. This is the responsibility of the system builder/commissioner.

Network Isolation

For safety reasons, it is a specific requirement of the Machinery Directive that a keyswitch must be provided that isolates any network input signal during maintenance, so that remote commands cannot be received that could result in the operation of the machinery. The FA–ISONET does not have a keyswitch! Use a keylock and switch on your enclosure which when open removes power from the FA–ISONET. To avoid the introduction of noise into the system, any keyswitch assembly should be housed in its own earth grounded steel box and the integrity of the shielded cable must be maintained.

Again, for further information on EU directives we recommend that you get a copy of our EU Installation Manual (DA–EU–M). Also, if you are connected to the World Wide Web, you can check the EU commission's official site at: http://ec.europa.eu/index_en.htm

DC Powered Versions

Due to slightly higher emissions radiated by the DC powered versions of the DL05, and the differing emissions performance for different DC supply voltages, the following stipulations must be met:

- The PLC must be housed within a metallic enclosure with a minimum amount of orifices.
- I/O and communications cabling exiting the cabinet must be contained within metallic conduit/trunking.

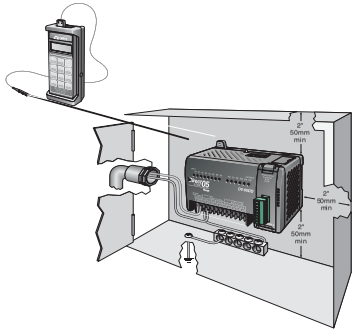

Items Specific to the DL05

- The rating between all circuits in this product are rated **as basic insulation only**, as appropriate for single fault conditions.
- There is no isolation offered between the PLC and the analog inputs of this product.
- It is the responsibility of the system designer to earth one side of all control and power circuits, and to earth the braid of screened cables.
- This equipment must be properly installed while adhering to the guidelines of the in house PLC installation manual DA–EU–M, and the installation standards IEC 1000–5–1, IEC 1000–5–2 and IEC 1131–4.
- It is a requirement that all PLC equipment must be housed in a protective steel enclosure, which limits access to operators by a lock and power breaker. If access is required by operators or untrained personnel, the equipment must be installed inside an internal cover or secondary enclosure.
- It should be noted that the safety requirements of the machinery directive standard EN60204–1 state that all equipment power circuits must be wired through isolation transformers or isolating power supplies, and that one side of all AC or DC control circuits must be earthed.
- Both power input connections to the PLC must be separately fused using 3 amp T type anti–surge fuses, and a transient suppressor fitted to limit supply overvoltages.
- If the user is made aware by notice in the documentation that if the equipment is used in a manner not specified by the manufacturer the protection provided by the equipment may be impaired.

Notes

Introduction to Serial Communications

Appendix K

In this Appendix

Introduction to Serial Communications K–2

Introduction to Serial Communications

*Direct*LOGIC® PLCs have two built-in serial communication ports which can be used to communicate to other PLCs or to other serial devices. In order to fully understand the capabilities and limitations of the serial ports, a brief introduction to serial communications is in order.

There are three major components to any serial communications setup:

Wiring standard

Communications protocol

Communications parameters

Each of these will be discussed in more detail as they apply to *Direct*LOGIC PLCs.

Wiring Standards

There are three different wiring standards that can be used with most of the *Direct*LOGIC PLCs: RS-232C, RS-422 and RS-485.

RS-232C is a point-to-point wiring standard with a practical wiring distance of 15 meters, or 50 feet, maximum. This means that only two devices can communicate on an RS-232C network, a single master device and a single slave device, and the total cable length cannot exceed 50 feet. Belden® 8102, or equivalent, is recommended for RS-232C networks.

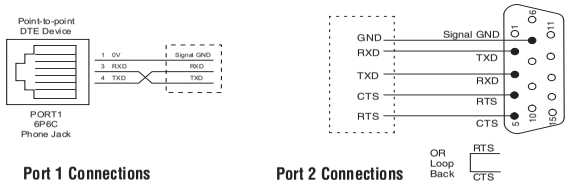

Port 1 Connections **Port 2 Connections**

NOTE: Port 2 on the DL05 uses an RJ12 phone type connector (see page 4-4 and 4-5 for the cable connections.

RS-422 is a multi-point wiring standard with a practical wiring distance of 1000 meters, or 3280 feet, maximum total length. This means that a single master can communicate with up to ten slaves, and the total distance of all network cabling between all devices cannot exceed 1000 meters, or 3280 feet. The RS-422 wiring standard does not specify a network topology, but in practice, a daisy-chain topology with the master at one end is the only way to ensure network reliability. Belden 8102, or equivalent is recommended for RS-422 networks. Use a terminating resistor equal in value to the characteristic impedance of the cable being used (100 Ω for Belden 8102).

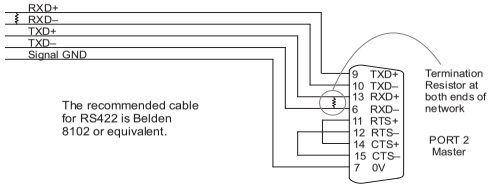

RS-485 is a multi-point wiring standard with a practical wiring distance of 4000 feet maximum. This wiring standard provides for the possibility of up to 32 masters communicating to up to 32 slaves all within the maximum distance of 4000 feet. Note that while the RS-485 wiring standard provides for multiple masters on the same network, **the *Direct*LOGIC PLCs do not support multiple masters on a single network.** The RS-485 wiring standard does not specify a network topology, but in practice, a daisy-chain topology with the master at one end is the only way to ensure network reliability. Belden 9841, or equivalent is recommended for RS-485 networks. Use a terminating resistor equal in value to the characteristic impedance of the cable being used (120 Ω for Belden 9841).

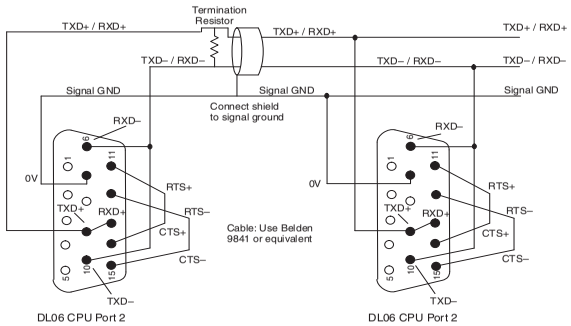

Communications Protocols

A communications protocol is the 'language' the devices on a network use to communicate with each other. All the devices on the network must use the same communications protocol in order to be able to communicate with each other. The protocols avaliable in the *Direct*LOGIC PLCs are listed in the following table.

Communications Protocols							
Protocol	**Master**	**Slave**	**Port 1***	**Port 2**	**RS-232C**	**RS-422**	**RS-485****
K-Sequence	No	Yes	Yes	Yes	Yes	Yes	No
***Direct*NET**	Yes	Yes	Yes	Yes	Yes	Yes	No
Modbus RTU	Yes	Yes	Yes	Yes	Yes	Yes	Yes
ASCII	Out	In	No	Yes	Yes	Yes	No

* Port 1 supports slave only and is only RS-232C with fixed communications parameters of 9600 baud, 8 data bits, 1 start bit, 1 stop bit, odd parity and station address 1. It is an asynchronous, half-duplex DTE port and auto-selects between K-Sequence, *Direct*NET and Modbus RTU protocols.

** RS-485 is available on Port 2 for Modbus RTU protocol only.

K-Sequence protocol is not available for use by a master DL05 PLC. Therefore, it cannot be used for networking between PLCs. Its primary use in the DL05 PLC is as a slave to *Direct*SOFT programming software and to an operator interface.

***Direct*NET** protocol is available for use by a master or by a slave DL05 PLC. This, and the fact that it is 'native' protocol, makes it ideal for PLC-to-PLC communication over a point-to-point to multipoint network using the RX and WX instructions.

Modbus RTU protocol is a very common industry standard protocol, and can be used by a master or slave DL05 to communicate with a wide variety of industrial devices which support this protocol.

ASCII is another very common industry standard protocol, and is commonly used where alpha-numeric character data is to be transferred. Many input devices, such as, barcode readers and electronic scales use ASCII protocol, and many output devices accept ASCII commands, as well.

It doesn't matter which wiring standard or protocol is used, there are several communications parameters to select for each device before they will they will be able to communicate. These parameters include:

Baud Rate	Flow Control
Data Bits	Echo Suppression
Parity	Timeouts
Stop Bits	Delay Times
Station Address	Format

All of these parameters may not be necessary, or available, for your application. The parameters used will depend on the protocol being used, and whether the device is a master or slave.

NOTE: The point to remember is that when there is the same parameter available in the master and in the slave (i.e. Baud Rate, Parity, Stop Bits, etc), the settings must match.

DL05 Port Specifications

Communications Port 1	
Port 1	Connects to HPP, ***Direct*SOFT 5**, operator interfaces, etc.
	6-pin, RS232C
	Communication speed (baud): 9600 (fixed)
	Parity: odd (fixed)
	Station Address: 1 (fixed)
	8 data bits
	1 start, 1 stop bit
	Asynchronous, half-duplex, DTE
	Protocol (auto-select): K-sequence (slave only), ***Direct*NET** (slave only), Modbus (slave only)

Communications Port 2	
Port 2	Connects to HPP, ***Direct*SOFT 5**, operator interfaces, etc.
	15-pin, multifunction port, RS232C, RS422, RS485 (RS485 with 2-wire is only available for Modbus and Non-sequence).
	Communication speed (baud): 300, 600, 1200, 2400, 4800, 9600, 19200, 38400
	Parity: odd (default), even, none
	Station Address: 1 (default)
	8 data bits
	1 start, 1 stop bit
	Asynchronous, half-duplex, DTE
	Protocol (auto-select): K-sequence (slave only), ***Direct*NET** (master/slave), Modbus (master/slave), non-sequence/print/ASCII in/out

DL05 Port Pinouts

Port 1 Pin Descriptions		
1	0V	Power (-) connection (GND)
2	5V	Power (+) connection
3	RXD	Receive data (RS-232C)
4	TXD	Transmit data (RS-232C)
5	5V	Power (+) connection
6	0V	Power (-) connection (GND)

Port 2 Pin Descriptions		
1	0V	Power (-) connection (GND)
2	5V	Power (+) connection
3	TXD	Transmit data (RS-232C)
4	RXD	Receive data (RS-232C)
5	RTS	Ready to send (RS-232C)
6	CTS	Clear to send (RS232C)

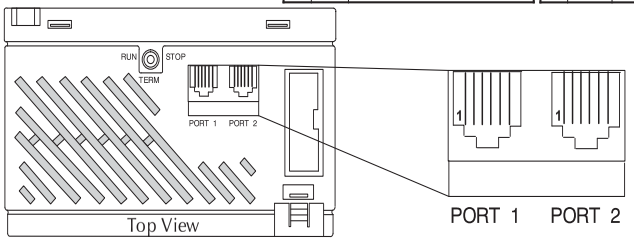

Note that the default configuration for port 2 is:

Auto-detect among K-Sequence, *Direct*NET, and Modbus RTU protocols
Timeout = Base Timeout x 1 (800 ms)
RTS on delay time = 0 ms
RTS off delay time = 0ms
Station Number = 1
Baud rate = 19200
Stop bits = 1
Parity = odd
Format = Hex
Echo Suppression = RS-422/485 (4-wire) or RS-232C

Port Setup Using *Direct*SOFT 5 or Ladder Logic Instructions

Port 2 on the DL05 can be configured for communications using the various protocols which have been previously mentioned. Also, the communications parameters can be configured to match the parameters in the other device(s) with which the PLC will be communicating. The port may be configured using the *Direct*SOFT 5 PLC programming software, or by using ladder logic within the PLC program. It is important to note that the settings for port 2 are never saved to disk with *Direct*SOFT 5, so if you are using port 2 in other than its default configuration (see page K-6) it is a good idea to include the port setup in the ladder program, typically on a first scan bit, or in an initialization subroutine.

To setup port 2 using *Direct*SOFT 5 the PLC must be turned on and connected to *Direct*SOFT 5. If the PLC Setup toolbar is displayed, either select the **Port 2** button or select **PLC > Setup > Setup Sec. Comm Port...** from the menu bar located at the top of the programming window. A dialog box like the one below will appear. Make the appropriate settings and write them to the PLC.

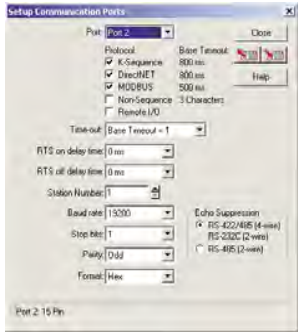

In order to setup port 2 in your relay ladder logic the appropriate values must be written to V7655 (Word 1), V7656 (Word 2) and V7650 (Word 3, for ASCII only) to specify the settings for the port. Then write the 'setup complete' flag (K0500) to V7657 (Word 3) to request the CPU to accept the port settings. Once the CPU sees the 'setup complete' flag in V7657 it will test the port settings which have selected for validity, and then change the value in V7657 according to the results of this test. If the port settings are valid, the CPU will change the value in V7657 to 0A00 ('A' for Accepted). If there was an error in the port settings, the CPU will change the value in V7657 to 0E00 ('E' for Error).

NOTE: This is a Helpful Hint. *Rather than build the setup words manually from the tables, use* ***Direct***SOFT 5 to setup the port as desired then use a Dataview to view the setup words as BCD/HEX. Then simply use these numbers in the setup code.

The data that is written to the port setup words has two formats. The format that is used depends on whether K-Sequence, *Direct*NET, Modbus RTU (method 1) or ASCII (method 2) is selected.

Port 2 Setup for RLL Using K-Sequence, *Direct*NET or Modbus RTU

V7655 (Word 1)	RTS On-delay	Timeout (% of timeout)	Protocol	RTS Off-delay
0yyy 0ttt mmmm mxx	yyy	ttt	mmmmm	xxx
	000 = 0ms	000 = 100%	10000 = K-Sequence	000 = 0ms
	001 = 2ms	001 = 120%	01000 = *Direct*NET	001 = 2ms
	010 = 5ms	010 = 150%	00100 = Modbus RTU	010 = 5ms
	011 = 10ms	011 = 200%		011 = 10ms
	100 = 20ms	100 = 500%		100 = 20ms
	101 = 50ms	101 = 1000%		101 = 50ms
	110 = 100ms	110 = 2000%		110 = 100ms
	111 = 500ms	111 = 5000%		111 = 500ms

V7656 (Word 2)	Parity	Stop Bits	Echo Suppression	Baud Rate
K-Sequence, *Direct*NET & Modbus RTU				
pps0 ebbb xaaa aaaa	pp	s	e	bbb
	00 = None	0 = 1 bit	0 = 232 or 422	000 = 300
	10 = Odd	1 = 2 bits	1 = 485, 2 wire	001 = 600
	11 = Even			010 = 1200
				011 = 2400
				100 = 4800
				101 = 9600
				110 = 19200
				111 = 38400

V7656 (Word 2) cont'd	Protocol	Secondary Address
K-Sequence, *Direct*NET & Modbus RTU	(*Direct*NET)	xaaaaaaa (*Direct*NET)
pps0 ebbb xaaa aaaa	x	_aaaaaaa (K-Seq. & Modbus RTU)
	0 = Hex	K-Sequence: 1-90
	1 = ASCII	*Direct*NET: 1-90
		Modbus: 1-247

To setup port 2 for Modbus protocol for the following: RTS On-delay of 10ms, Base timeout x1, RTS Off-delay of 5ms, Odd parity, 1 Stop bit, echo suppression for RS232-C/RS422, 19,200 baud, Station Number 23 you would use the relay ladder logic shown below.

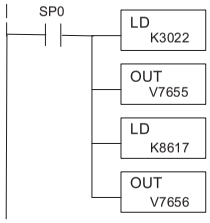

Port 2 Setup for RLL Using ASCII

Word 1	RTS On-delay	Timeout (in% of std. timeout)	Protocol	RTS Off-delay
0yyy 0ttt mmmm mxx	yyy	ttt	mmmmm	xxx
DL05/06: V7655	000 = 0ms	000 = 100%	00010 = Non-Sequence	000 = 0ms
	001 = 2ms	001 = 120%		001 = 2ms
	010 = 5ms	010 = 150%		010 = 5ms
	011 = 10ms	011 = 200%		011 = 10ms
	100 = 20ms	100 = 500%		100 = 20ms
	101 = 50ms	101 = 1000%		101 = 50ms
	110 = 100ms	110 = 2000%		110 = 100ms
	111 = 500ms	111 = 5000%		111 = 500ms

Word 2	Parity	Stop Bits	Echo Suppression (valid for DL05 only)	Baud Rate
K-Sequence, *Direct*NET & Modbus RTU				
pps0 ebbb xaaa aaaa	pp	s	e	bbb
DL05/06: V7656	00 = None	0 = 1 bit	0 = RS-232C, RS-422 or RS-485 (4 wire)	000 = 300
	10 = Odd	1 = 2 bits	1 = RS-485 (2 wire)	001 = 600
	11 = Even			010 = 1200
				011 = 2400
				100 = 4800
				101 = 9600
				110 = 19200
				111 = 38400

Word 2 cont'd	Protocol Mode
DL05/06: V7650	01110000 = No flow control
	01110001 = Xon/Xoff flow control
	01110010 = RTS flow control
	01110011 = Xon/Xoff and RTS flow control

Word 3	V-memory address for data
DL05/06: V7656	Hex value of the V-memory location to temporarily store the ASCII data coming into the PLC. Set this parameter to an unused V-memory location which has enough consecutive memory locations free to store the longest string that will come into the PLC.

To setup port 2 for Non-sequence (ASCII) communications with the following: RTS On-delay of 10ms, Base timeout x1, RTS Off-delay of 5ms, Odd parity, 1 Stop bit, echo suppression for RS232-C/RS422, 19,200 baud, 8 data bits, V-memory buffer starting at V2000 and no flow control you would use the relay ladder logic shown below.

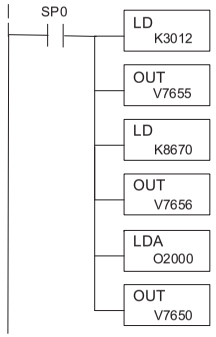

K-Sequence Communications

The K-Sequence protocol can be used for communication with *Direct*SOFT 5, an operator interface or any other device that can be a K-Sequence master. The DL05 PLC can be a K-Sequence slave on either port 1 or port 2. The DL05 PLC cannot be a K-Sequence master.

In order to use port 2 for K-Sequence communications you first need to setup the port using either *Direct*SOFT 5 or ladder logic as described above.

*Direct*NET Communications

The *Direct*NET protocol can be used to communicate to another PLC or to other devices that can use the *Direct*NET protocol. The DL05 can be used as either a master using port 2 or a slave using either port 1 or port 2.

In order to use port 2 for *Direct*NET communications you must first setup the port using either *Direct*SOFT 5 or ladder logic as previously described.

For network slave operation, nothing more needs to be done. Port 2 will function as a slave unless network communications instructions are executed by the ladder logic program.

For a network master operation you will simply need to add some ladder rungs using the network communication instructions RX and/or WX. If you use more than one network communication instruction is executed at any given time. If you have just a few network communications instructions in your program, you can use discrete bits to interlock them. If you are using many network communications instructions, a counter or a shift register will be a more convenient way to interlock the instructions.

The following step-by-step procedure will provide you the information necessary to set up your ladder program to receive data from a network slave.

K

Step 1: Identify Master Port # and Slave

The first Load (LD) instruction identifies the communications port number on the network master (DL05) and the address of the slave station. This instruction can address up to 99 Modbus slaves, or 90 *Direct*NET slaves. The format of the word is shown to the right. The "F2" in the upper byte indicates the use of the right port of the DL05 PLC, port number 2. The lower byte contains the slave address number in BCD (01 to 99).

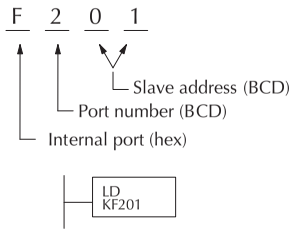

Step 2: Load Number of Bytes to Transfer

The second Load (LD) instruction determines the number of bytes which will be transferred between the master and slave in the subsequent WX or RX instruction. The value to be loaded is in BCD format (decimal), from 1 to 128 bytes.

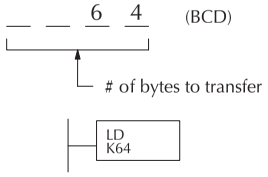

The number of bytes specified also depends on the type of data you want to obtain. For example, the DL05 Input points can be accessed by V-memory locations or as X input locations. However, if you only want X0 – X27, you'll have to use the X input data type because the V-memory locations can only be accessed in 2-byte increments. The following table shows the byte ranges for the various types of *Direct*LOGIC products.

DL05 / 06 / 205 / 350 / 405 Memory	Bits per unit	Bytes
V-memory T / C current value	16 16	2 2
Inputs (X, SP)	8	1
Outputs (Y, C, Stage, T/C bits)	8	1
Scratch Pad Memory	8	1
Diagnostic Status	8	1

DL330 / 340 Memory	Bits per unit	Bytes
Data registers T / C accumulator	8 16	1 2
I/O, internal relays, shift register bits, T/C bits, stage bits	1	1
Scratch Pad Memory	8	1
Diagnostic Status(5 word R/W)	16	10

Step 3: Specify Master Memory Area

The third instruction in the RX or WX sequence is a Load Address (LDA) instruction. Its purpose is to load the starting address of the memory area to be transferred. Entered as an octal number, the LDA instruction converts it to hex and places the result in the accumulator.

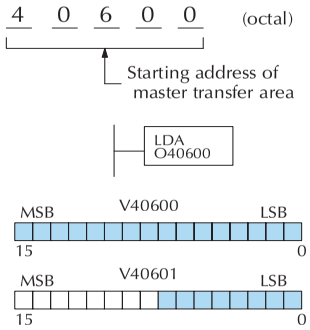

For a WX instruction, the DL05 CPU sends the number of bytes previously specified from its memory area beginning at the LDA address specified.

For an RX instruction, the DL05 CPU reads the number of bytes previously specified from the slave, placing the received data into its memory area beginning at the LDA address specified.

K

NOTE: Since V-memory words are always 16 bits, you may not always use the whole word. For example, if you only specify 3 bytes and you are reading Y outputs from the slave, you will only get 24 bits of data. In this case, only the 8 least significant bits of the last word location will be modified. The remaining 8 bits are not affected.

Step 4: Specify Slave Memory Area

The last instruction in our sequence is the WX or RX instruction itself. Use WX to write to the slave, and RX to read from the slave. All four of our instructions are shown to the right. In the last instruction, you must specify the starting address and a valid data type for the slave.

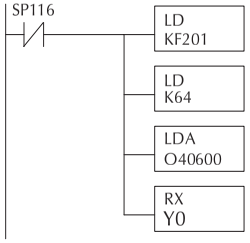

- *Direct*NET slaves – specify the same address in the WX and RX instruction as the slave's native I/O address
- Modbus DL405, DL205, or DL05 slaves – specify the same address in the WX and RX instruction as the slave's native I/O address
- Modbus 305 slaves – use the following table to convert DL305 addresses to Modbus addresses

DL305 Series CPU Memory Type–to–Modbus Cross Reference (excluding 350 CPU)					
PLC Memory Type	**PLC Base Address**	**Modbus Base Address**	**PLC Memory Type**	**PLC Base Address**	**Modbus Base Address**
TMR/CNT Current Values	R600	V0	TMR/CNT Status Bits	CT600	GY600
I/O Points	IO 000	GY0	Control Relays	CR160	GY160
Data Registers	R401,R400	V100	Shift Registers	SR400	GY400
Stage Status Bits (D3-330P only)	S0	GY200			

K

Communications from a Ladder Program

Typically network communications will last longer than 1 scan. The program must wait for the communications to finish before starting the next transaction.

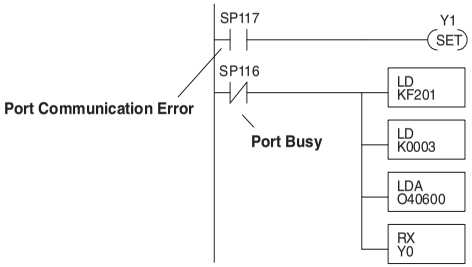

Port 2, which can be a master, has two Special Relay contacts associated with it (see Appendix D for comm port special relays). One indicates "Port busy"(SP116), and the other indicates "Port Communication Error"(SP117). The example above shows the use of these contacts for a network master that only reads a device (RX). The "Port Busy" bit is on while the PLC communicates with the slave. When the bit is off the program can initiate the next network request.

The "Port Communication Error" bit turns on when the PLC has detected an error. Use of this bit is optional. When used, it should be ahead of any network instruction boxes since the error bit is reset when an RX or WX instruction is executed.

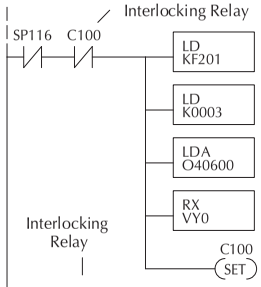

Multiple Read and Write Interlocks

If you are using multiple reads and writes in the RLL program, you have to interlock the routines to make sure all the routines are executed. If you don't use the interlocks, then the CPU will only execute the first routine. This is because each port can only handle one transaction at a time.

In the example to the right, after the RX instruction is executed, C100 is set. When the port has finished the communication task, the second routine is executed and C100 is reset.

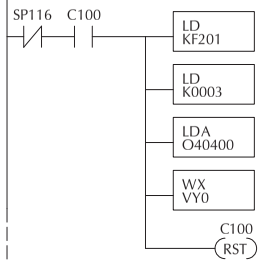

If you're using RLL^{PLUS} Stage Programming, you can put each routine in a separate program stage to ensure proper execution and switch from stage to stage allowing only one of them to be active at a time.

K

Modbus RTU Communications

The Modbus RTU protocol can be used for communication with any device that uses the Modbus RTU protocol. The protocol is very common and is probably the closest thing to an "industry standard" protocol in existence. The DL05 can be a Modbus RTU slave on either port 1 or port 2, and it can be a Modbus TRU master on port 2. The RS 485 wiring standard may be used on port 2 for the Modbus RTU protocol only.

In order to use port 2 for Modbus RTU communications you must first set up the port using either *Direct*SOFT 5 or ladder logic as previously described.

For network slave operation, nothing more needs to be done. Port 2 will function as a slave unless network communications instructions are executed by the ladder logic program.

For network master operation the Modbus RTU network communication instructions MRX and/or MWX needs to be added to some ladder rungs. If more than one network communication instruction is used, the rungs need to be interlocked to ensure that only one communication instruction is executed at any given time. If only a few network communications instructions are used in your program, discrete bits can be used to interlock them. If many network communications instructions are used, either a counter or a shift register will be a more convenient way to interlock the instructions.

INDEX

A

Accessing AUX Functions
- via direct entry, A–3
- via *Direct*SOFT 5, A–3
- via the Handheld Programmer, A–3

Accumulating Fast Timer Instruction, 5–38
Accumulating Timer Instruction, 5–38
Accumulator / Stack Load Instructions, 5–48
Add Binary Instruction, 5–78
Add Double Instruction, 5–69
Add Instruction, 5–68
Agency Approvals, 2–10
And (Logical) Instructions, 5–60
- Comparative, 5–30

And Bit-of-Word instruction, 5–14
And Comparative Instruction, 5–30
And Double Instruction, 5–61
And If Equal Instruction, 5–27
And If Not Equal Instruction, 5–27
And Immediate instruction, 5–32
And Instruction, 5–13
And Negative Differential Instruction, 5–21
And Not Bit-of-Word instruction, 5–14
And Not Immediate Instruction, 5–32
And Not Instruction, 5–13
- Comparative, 5–30

And Positive Differential Instruction, 5–21
And Store Instruction, 5–15
ASCII Constant Instruction, 5–112
ASCII Table, G-1
- DECIMAL TO HEX TO ASCII CONVERTER, G-2

ASCII to HEX Instruction, 5–90
Auto tuning error, 8–47
Auto Tuning Procedure, 8–44
Auxiliary Functions, 3–8, A–2
- AUX 2* — RLL Operations, A–4
- AUX 3* — V-memory Operations, A–2, A–4
- AUX 4* — I/O Configuration, A–2
- AUX 5* — CPU Configuration, A–5
- AUX 6* — Handheld Programmer Configuration, A–2, A–8
- AUX 7* — EEPROM Operations, A–2, A–8
- AUX 8* — Password Operations, A–2, A–9

B

Binary Coded Decimal Instruction, 5–88
Binary Instruction, 5–87
Binary Numbering System, I–2
Bit Operation Instructions, 5–82
Boolean Instructions, 5–9
Bumpless Transfer, 8–2, 8–3, 8–13, 8–26, 8–74

C

Cables
- Operator Interface, 2–15
- Programming Device, 2–15

Cascade Control, 8–63
Tuning, 8–65
Common Terminals, 2–17
Communication Ports, 1–13
Communication Ports Specifications, 4–4
pinout diagrams, 3–4
Communications Problems, 9–7
Comparative Boolean Instructions, 5–25
Compare Double Instruction, 5–67
Compare Instruction, 5–66
Components, 1–6
Configuring, E–5
Connections
Power input, 1–8
Programming Devices, 1–8
Connector
Common Terminal Concepts, 2–17
Connector Removal, 2–6
Diagram, 2–17
Control Relay Bit Map, 3–31
Converge Jump Instruction, 7–23
Converge Stage, 7–23
Converge Stage Instruction, 7–23
Convergence Jump, 7–20
Convergence Stages, 7–19
Converting Number Formats
ASCII to HEX (ATH), 5–90
HEX to ASCII (HTA), 5–91
Counter Instruction, 5–41
CPU
Changing Modes, 3–7
Features, 3–2
Hardware Setup, 3–4
Mode Switch, 3–6
Operation, 3–11
Specifications, 3–3
Status Indicators, 3–6
CPU Configuration, A–2, A–5
CPU Control Instructions, 5–99
CPU Indicators, 9–1, 9–6
CPU Scan Time, 3–18

D

Data Label Instruction, 5–112
Example, 5–113
Data Type Mismatch, I–7
Decode Instruction, 5–86
Decrement Binary Instruction, 5–77
Decrement Instruction, 5–75
Designing a Successful System, 1–10
Diagnostics, 9–2
Dimensions, 2–7
DIN Rail Mounting Rails, 2–9
*Direct*NET, 4-7
Disable Interrupts Instruction, 5–109
Divide Binary Instruction, 5–81
Divide Double Instruction, 5–75
Divide Instruction, 5–74
DL05 Micro PLC
Environmental Specifications, 2–10
Front Panel, 2–5, 2–7
Panel Layout & Clearances, 2–8
DL05 Micro PLC Error Codes, 9–4
DL05 PLC Memory, F-2
Drum Control Techniques, 6–10
Drum Instruction, 6–12
Drum Introduction, 6–2
Chart Representation, 6–3
Terminology, 6–2
Drum Operation, 6–8

E

Emergency Stops, 2–3
Enable Interrupts Instruction, 5–108
Encode Instruction, 5–85
END Instruction, 5–4, 5–99
Error Codes
Pulse Output, E–42
Error Codes Listing, B–2
Error Term Selection, 8–33
European Union (EU) Directives, J–2
Event Drum Instruction, 6–14
Using the Handheld Programmer, 6–16
Exclusive Or Double Instruction, 5–65
Exclusive Or Instruction, 5–64
Execution Times, C–2

F

Fatal Errors, 9–2
Fault, 5–111
Feedforward Control, 8–68
For / Next Instruction, 5–101
Freeze Bias, 8–11, 8–34
Fuse Protection, 2–11

G

Goto Subroutine, 5–103
Gray Code Instruction, 5–93

H

Handheld Programmer, A–3, A–8, A–9
HEX to ASCII Instruction, 5–91
Hexadecimal Numbering System, I–3
High- Speed I/O
Configuring, E–5
Discrete Inputs with Filter, E–52
Features, E–2
High-Speed Counter, E–6
High-Speed Interrupts, E–44
I/O points usage, E–4
Modes, E–4
Programming, E–11
Pulse Catch Input, E–49
Pulse Output, E–24
Hysteresis, 8–3, 8–13, 8–36, 8–37, 8–38

I

I/O Response Time, 3–15
I/O Selection Quick Chart, 1–5
Increment Binary Instruction, 5–77
Increment Instruction, 5–76
Initial Stage Instruction, 7–22
Instruction Execution Times, C–3
Accumulator Data Instructions, C–11
Bit Instructions, C–14
Boolean Instructions, C–3
Comparative Boolean Instructions, C–4
CPU Control Instructions, C–15
Drum Instructions, C–16
Immediate Instructions, C–10
Interrupt Instructions, C–15
Logical Instructions, C–12
Math Instructions, C–12
Message Instructions, C–16
Network Instructions, C–15
Number Conversion Instructions, C–14
Program Control Instructions, C–15
RLL PLUS Instructions, C–16
Table Instructions, C–14
Timer, Counter and Shift Register, C–10
Word Bit Instructions, C–17
Instruction List, 5–2

Instructions, 9–12
Accumulator/Stack load, 5–47
Bit Operation, 5–82
Capable of Run Time Edit, 9–14
Comparative Boolean, 5–25
CPU Control, 5–99
Immediate, 5–31
Interrupt, 5–109
Logical, 5–60
Math, 5–68
Message, 5–114
Network, 5–120
Number Conversion, 5–87
Program Control, 5–101
Stage, 7–21
Stage Programming, 7–2
Table, 5–96
Timer/Counter/Shift Register Instructions, 5–35
Intelligent Box Instructions, 5–124
Analog Helper, 5–126
Communication, 5–160
Counter, 5–218
Discrete Helper, 5–144
Math, 5–152
Memory, 5–150
Interrupt Instruction, 5–108
Interrupt Return Conditional Instruction, 5–108
Interrupt Return Instruction, 5–108
Interrupts, 5–108, E–47
Disable, 5–109
External, 5–109, E–46
High-Speed, E–44
Timed, E–46
Timed Interrupt Program Example, 5–110
Invert, 5–89

J

Jump Instruction, 7–7, 7–22

K

L

Load Address Instruction, 5–56
Load Double Instruction, 5–54
Load Formatted Instruction, 5–55
Load Instruction, 5–53
Load Label Instruction, 5–97
Logical Instructions, 5–60
Loop Mode, 8–27
Loop Table Word Definitions, 8–20

M

Maintenance, 9–2
Manual organization, 1–2
Master Line Reset Instruction, 5–106
Master Line Set Instruction, 5–106
Math Instructions, 5–68
Memory, 1–2
EEPROM, 1–12
FLASH, 1–12
Memory Cartridge, 10–2
Battery Back-up, 10–11
Clock/Calendar Instructions, 10–13
Error Codes, 10–18
Firmware Upgrade, 10–5
Move Memory Cartridge instruction, 10–15
Naming Cartridge, 10–6
Time instruction, 10–14
Write Enable/Disable Jumper, 10–3
Memory Map, 3–22
Table, 3–28

Message Instruction, 5–114
Modbus, 4–6
Modbus Address Table, 4–11
Mode of Operation
at Power-up, 3–7
Changing, 3–7
Mode Switch Functions, 3–6
Motion Control Profile, E–27
Mounting Guidelines, 2–7
Using Mounting Rails, 2–9
Mounting Rail, 2–9
Move Instruction, 5–96
Move Memory Cartridge Instruction, 5–97
Multiply Binary Instruction, 5–80
Multiply Double Instruction, 5–73
Multiply Instruction, 5–72, PB 5–72

N

Network Configuration and Connections, 4–4
Networking Diagrams, 4–5
Network Instructions, 5–120
Network Master Operation, 4–14
Network Slave Operation, 4–8
NEXT Instruction, 5–101
No Operation Instruction, 5–99
Non-fatal Errors, 9–2
Non-volatile V-memory, F-3
Not Instruction, 5–18
Not Jump Instruction, 7–22
Number Conversion Instructions, 5–87
Numbering Systems, 3–20, I-1
Numerical Constant Instruction, 5–112

O

Octal Numbering System, I–4
One Shot Instruction, 5–18
Or Bit-of-Word instruction, 5–12
Or Double Instruction, 5–63
Or If Equal Instruction, 5–26
Or If Not Equal Instruction, 5–26
OR Immediate Instruction, 5–31, 5–32
Or Instruction, 5–11
Or Instruction (comparative), 5–29
Or Logical Instruction, 5–62
Or Negative Differential Instruction, 5–20
Or Not Bit-of-Word instruction, 5–12
Or Not Immediate Instruction, 5–31
Or Not Instruction, 5–11
Or Not Instruction (comparative), 5–29
Or Out Immediate Instruction, 5–33
Or Out Instruction, 5–16
Or Positive Differential Instruction, 5–20
Or Store, 5–15
Out, 5–16
Out Bit-of-Word, 5–17
Out Double Instruction, 5–57
Out Formatted Instruction, 5–58
Out Immediate Instruction, 5–33
Out Instruction, 5–57
Output Data Instructions, 5–48

P

Panel Layout, 2–8
Parallel Processing Concepts
Converging Processes, 7–19
Parallel Processes, 7–19
Part Number, 1–4, 1–5
Password, 3–10
Pause Instruction, 5–24
PID
Analog Filter, 8–53

*Direct*SOFT 5 Filter Intelligent Box Instruction, 8–55
Error Flags, 8–18
Example Program, 8–70
Loop Modes, 8–3, 8–27, 8–51, 8–52, 8–64
Parameters, 8–32
Setup Alarms, 8–35
Special Features, 8–51
PID Alarms, 8–35
Calculation Overflow/Underflow Error, 8–38
Hysteresis, 8–38
Mode/Alarm Bit Description, 8–23
Monitor Limit, 8–35
Programming Error, 8–38
PV Deviation, 8–36
Rate-of-Change, 8–37
PID Loop
Alarms, 8–13
Auto Tuning, 8–40, 8-44
Configure, 8–25
Features, 8–2
Manual Tuning, 8–40, 8–41, 8–45, 8–53
Mode, 8–27
Operating Modes, 8–14
Operation, 8–9
Program Setup, 8–70
Reverse Acting, 8–12, 8–14, 8–26, 8–40
Setup, 8–18
Terminology, 8–74
Troubleshooting Tips, 8–72
PID Mode 2 Word Description, 8–22
PID Mode Setting 1 Description, 8–21
PLC Numbering Systems, 3–20
POP instruction, 5–58
Position Algorithm, 8–9, 8–15, 8–75
Position Form, 8–9
Positive Differential Instruction, 5–18
Power Indicator, 9–6
Presets
Calculating Values, E–10
Starting Location, E–9
Print Message Instruction, 5–114
Product Weight Table, H–2
Products and Data Types, I–9
Profile, E–29
Home Search, E–37
Motion Control, E–27
Registration, E–29
Trapezoidal, E–29, E–31
Velocity, E–29, E–39
Program Control Instructions, 5–101
Program Error Codes, 9–5
Error Code Locations, 9–3
Program Execution Time, 3–19
Application Program Execution Formula, 3–19
Program Mode, 3–12
Programming Concepts, 1–11
Drum Sequencer Programming, 1–11
RLL diagram-style programming, 1–11
Stage programming, 1–11
Programming Methods
*Direct*SOFT Programming for Windows™, 1–4
Handheld Programmer, 1–5

Q

Quick Start, 1–6

R

Ramp/Soak Generator, 8–56
Controls, 8–59

*Direct*SOFT 5 Ramp/Soak Example, 8–61
Profile Monitoring, 8–60
Ramp/Soak Flag Bit Description, 8–23
Ramp/Soak Table Location, 8–24
Relay Ladder, 8–61
Table, 8–57
Table Flags, 8–59
Test Profile with PID View, 8–62
Testing, 8–60
Rate-of-Change, 8–3, 8–13, 8–14, 8–37
Read from Network Instruction, 5–120
Real Numbering System, I–5
Registration Profile, E–34
Relay Output Wiring Methods, 2–20
Prolonging Relay Contact Life, 2–22
Surge Suppression For Inductive Loads, 2–21
Reset Bit-of-Word instruction, 5–23
Reset Immediate Instruction, 5–34
Reset Instruction, 5–22
Reset Watch Dog Timer Instruction, 5–100
Reset Windup, 8–10, 8–34, 8–75
Retentive Memory Ranges, 3–9
RUN Indicator, 9–7
Run Mode, 3–12
Run Time Edits, 9–14

S

Safety Guidelines, 2–2
Scratchpad Memory, 1–9
Set Bit-of-Word instruction, 5–23
Set Immediate Instruction, 5–34
Set Instruction, 5–22
Shift Register Instructions, 5–35
Shift Register (SR), 5–47
Shift Right Instruction, 5–84
Shuffle Digits Instruction, 5–94
Signed vs. Unsigned Integers, I–8
Sinking / Sourcing Concepts, 2–16
Special Relays, D–1, D–2, D–3, D–4, E–8
Special Relays Corresponding to Error Codes, 9–3
Specifications, 2–28
D0–05AA, 2–36
D0–05AD, 2–32
D0–05AR, 2–28
D0–05DA, 2–38
D0–05DD, 2–34
D0–05DD–D, 2–42
D0–05DR, 2–30
D0–05DR–D, 2–40
Environmental, 2–10
Input Power, 2–12
Square Root, 8–14
Stage Counter Instruction, 5–43
Stage Instruction, 7–21
Stage Programming
Convergence, 7–19
Emergency Stop, 7–14
Exclusive Transitions, 7–14
Four Steps to Writing a Stage Program, 7–9
Garage Door Opener Example, 7–10
Initial Stage, 7–5
Introduction, 7–2
Jump Instruction, 7–7
Parallel Processing Concepts, 7–19
Parallel States, 7–12
Power Flow Transition, 7–18
Program Organization, 7–15
Questions and Answers, 7–25
Stage Instruction Characteristics, 7–6
Stage View, 7–18
State Diagrams, 7–3
Supervisory Process, 7–17
Timer Inside a Stage, 7–13

Standard Maintenance, 9–2
Status Indicators, 3–6
Step Transitions, 6–4
Event-Only Transitions, 6–6
Instruction Types, 6–4
Timer-Only Transitions, 6–4
Stop Instruction, 5–99
Store Bit-of-Word instruction, 5–10
Store If Not Equal Instruction, 5–25
Store Immediate Instruction, 5–31
Store Instruction, 5–9
Store Negative Differential Instruction, 5–19
Store Not Bit-of-Word instruction, 5–10
Store Not Immediate Instruction, 5–31
Store Not Instruction, 5–9
Store Positive Differential Instruction, 5–19
Subroutine Return Conditional Instruction, 5–103
Subroutine Return Instruction, 5–103
Subtract Binary Instruction, 5–79
Subtract Double Instruction, 5–71
Subtract Instruction, 5–70
Sum Instruction, 5–82
System Power, 1–9
System V-memory, 3–26

T

Table Instructions, 5–96
Technical Support, 1–2
Time-Proportioning Control, 8–68
On/Off Control Program, 8–69
Timer Fast Instruction, 5–36
Timer Instruction, 5–36
Timer Status Bit Map, 3–32
Transfer Mode, 8–26
Trapezoidal Profile, E–30, E–32
Troubleshooting
Communications, 9–7
Debug Special Instructions, 9–12
Electrical Noise, 9–10
I/O Point, 9–8
Program debug, 9–11
Troubleshooting Guide, E–23
HSIO Mode 20, E–23
HSIO Mode 30, E–42

U

Up Down Counter Instruction, 5–45
Using Pointers, 5–51

V

V-memory, 3–26
V-memory Error Code Locations, 9–3
Velocity Algorithm, 8–9, 8–15, 8–77
Velocity Form, 8–12
Velocity Profile, E–30, E–40

W

Website, 1–2
Wiring, 1–12, 2–11
Counter Outputs, E–7
Encoder, E–3
DC Input Wiring Methods, 2–24
DC Output Wiring Methods, 2–25
Drive Inputs, E–26
External Power Source, 2–12
Fuse Protection, 2–13
High Speed I/O Wiring Method, 2–26
Input Power, 2–11
Power Input, 1–9
Write to Network Instruction, 5–122

Cutler Hammer:

Heater Packs- H2013

Control Panel - ECN5422 CAE

Motor Starter- AN16GNO

Overload Protection – FH47

Enclosed Control Product Guide
Contents

Cutler-Hammer® Enclosed Control Products

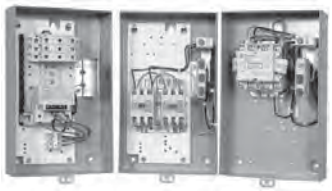

Lighting Contactors

MVX9000 Microdrives

Introduction	1
Catalog Parent Number Index	2
NEMA Contactors & Starters	3
IEC Contactors & Starters	4
Lighting Contactors	5
Reduced Voltage Starters	6
Adjustable Frequency Drives	7
Pump Panels	8
HVAC Control	9
NEMA Vacuum Break Contactors & Starters	10
Type 7/9 Hazardous Location Starters	11
Multi-Pak Group Control	12
Manual Motor Control	13
Alternate Enclosures	14
Enclosed Dimensions	15
Accessories & Modification Codes	16
Renewal Parts	17
Technical Data & Specifications	18
Eaton Electrical Terms & Conditions	19

Dimensions, Weights and Ratings

Dimensions, weights and ratings given in this product guide **are approximate and should not be used for construction purposes**. Drawings containing exact dimensions are available upon request. All listed product specifications and ratings are subject to change without notice. Photographs are representative of production units.

Terms and Conditions

All prices and discounts are subject to change without notice. Price changes when they occur are published in the *Eaton Electrical Inc. Price and Availability Digest* (PAD). All orders accepted by Eaton's electrical group are subject to the general terms and conditions as set forth in "Terms & Conditions," **Tab 19**.

Technical and Descriptive Publications

This product guide contains brief technical data for proper selection of products. Further information is available in the form of technical information publications and illustrated brochures. If additional product information is required, contact your local Cutler-Hammer Products Distributor, call **1-800-525-2000** or visit our Web site at **www.eaton.com**.

Compliance with OSHA

Eaton Corporation offers no warranty and makes no representation that its product complies with the provisions or standards of the Occupational Safety and Health Act of 1970, or any regulations issued thereunder. In no event shall Eaton Electrical Inc. be liable for any loss, damage, fines, penalty or expenses arising under said Act.

Compliance with Nuclear Regulation 10 CFR 21

Eaton products are sold as commercial grade product not intended for application in facilities or activities licensed by the United States Nuclear Regulatory Commission for atomic purposes, under 10 CFR 21. Further certification will be required for use of the product in a safety-related application in any nuclear facility licensed by the U.S. Nuclear Regulatory Commission.

WARNING

The installation and use of Eaton products should be in accordance with the provisions of the U.S. National Electrical Code® and/or other local codes or industry standards that are pertinent to the particular end use. Installation or use not in accordance with these codes and standards could be hazardous to personnel and/or equipment.

These product guide pages do not purport to cover all details or variations in equipment, nor to provide for every possible contingency to be met in connection with installation, operation or maintenance. Should further information be desired or should particular problems arise which are not covered sufficiently for the purchaser's purposes, the matter should be referred to the local Eaton Products Distributor or Sales Office. The contents of this product guide shall not become part of or modify any prior or existing agreement, commitment or relationship. The sales contract contains the entire obligation of Eaton's electrical group. The warranty contained in the contract between the parties is the sole warranty of Eaton. Any statements contained herein do not create new warranties or modify the existing warranty.

Copyright ©2008, Eaton Corporation

Introduction

1

Contents

Description	*Page*
Welcome	1-2
Eaton Corporation	1-2
Technical Reference	1-2
Enclosure Types	1-2
Enclosure Ratings	1-3
Motor Circuit Elements	1-5
Power Supplies	1-5
Functions of Control	1-6
Two- and Three-Wire Control	1-7

Cutler-Hammer® Enclosed Control Products

1

Welcome

Welcome to the latest edition of the *Enclosed Control Product Guide* from Eaton's electrical business. In this updated edition, you will find complete details on our extensive line of Cutler-Hammer® Enclosed Products.

Eaton Corporation

Eaton Corporation is a diversified industrial manufacturer ranked among the largest Fortune 500 companies. The electrical group is Eaton's largest division and is a global leader in electrical control, power distribution, power quality, automation, and monitoring products and services. Eaton's electrical products include brands such as Cutler-Hammer®, MGE Office Protection Systems, Powerware®, Holec®, and MEM®. Eaton provides PowerChain Management® solutions to serve the needs of the industrial, institutional, IT, data center, mission critical, utility, residential and OEM markets worldwide.

PowerChain Management solutions help enterprises achieve sustainable and competitive advantages through proactive management of the power system as a strategic, integrated asset throughout its life cycle. With Eaton's distribution, generation and power quality equipment; full-scale engineering services; and information management systems, the power system is positioned to deliver powerful results: greater reliability, operating cost efficiencies, effective use of capital, enhanced safety, and risk mitigation.

Technical Reference

Enclosure Types

Enclosures provide mechanical and electrical protection for operator and equipment. Brief descriptions of the various types of Cutler-Hammer enclosures offered by Eaton are given below. See NEMA Standards Publication No. 250 for more comprehensive descriptions, definitions and/or test criteria.

Type 1

Type 1 (Conforms to IP40) — for Indoor Use

Suitable for most applications where unusual service conditions do not exist and where a measure of protection from accidental contact with enclosed equipment is required. Designed to meet tests for rod entry and rust resistance. Enclosure is sheet steel, treated to resist corrosion. Depending on the size, knockouts are provided on the top, bottom and sometimes on the side.

Type 3R

Type 3R (Conforms to IP52) — for Outdoor Use

Primarily intended for applications where falling rain, sleet or external ice formations are present. Gasketed cover. Designed to meet tests for rain, rod entry, external icing and rust resistance. Enclosure is sheet steel, treated to resist corrosion. Depending on the size, a blank cover plate is attached to the top (for a conduit hub) and knockouts are provided on the bottom.

Cover-mounted pilot device holes are provided and covered with hole plugs.

Type 4 (Conforms to IP65) — for Indoor or Outdoor Use

Provide measure of protection from splashing water, hose-directed water and wind blown dust or rain. Constructed of sheet steel with gasketed cover.

Designed to meet tests for hose-down, external icing and corrosion protection. When conduit connections are specified, enclosure has two watertight hubs (power) installed top and bottom or one control hub installed in bottom — depending on size.

Cover-mounted pilot device holes are provided and covered with hole plugs.

Type 4X

Type 4X (Conforms to IP65) — for Indoor or Outdoor Use

Provide measure of protection from splashing water, hose-directed water, wind blown dust, rain and corrosion. Constructed of stainless steel with gasketed cover. Designed to meet same tests as Type 4 except enclosure must pass a 200-hour salt spray corrosion resistance test.

Provided as 304-grade stainless steel as standard. Select 316-grade option for improved corrosion resistance.

Type 7 & 9 Bolted

Type 7/9 — for Hazardous Gas Locations

For use in Class I, Group B, C or D; Class II, Groups E, F and Class III indoor locations as defined in the National Electrical Code. Type 7/9 enclosures must withstand the pressure generated by explosion of internally trapped gases and be able to contain the explosion so that gases in the surrounding atmosphere are not ignited. Under normal operation, the surface temperature of the enclosure must be below the point where it could ignite explosive gases present in the surrounding atmosphere. Designed to meet explosion, temperature and hydrostatic design tests.

Type 12

Type 12 — (Conforms to IP62) — for Indoor Use

Provide a degree of protection from dripping liquids (non-corrosive), falling dirt and dust. Designed to meet tests for drip, dust and rust resistance. Constructed of sheet steel. Hole plugs cover pilot device holes. There are no knockouts, hub cover plates or hubs installed.

Many Cutler-Hammer Type 12 enclosures are suitable for use in Class II, Division 2, Group G and Class III, Divisions 1 and 2 locations as defined in the National Electrical Code.

Type 12 — Safety Interlock

The Type 12 enclosure can be ordered with a safety interlock on the door that can be padlocked off. A vault-type door latch system is used. A tapered plate holds the gasketed door tight against the case edge to provide a positive seal. The special door interlock consists of the door handle and a screwdriver operated cover defeater.

The cover defeater and the disconnect interlock defeater are both recessed screwdriver operated devices which cannot be manipulated with other types of tools.

Enclosure Ratings

Table 1-1. IEC IP Index of Protection Ratings

1st Number	Description	2nd Number	Description
0	No Protection	0	No Protection
1	Protection Against Solid Objects Greater than 50 mm	1	Protection Against Vertically Falling Drops of Water
2	Protection Against Solid Objects Greater than 12 mm	2	Protection Against Dripping Water When Tilted Up to 15 Degrees
3	Protection Against Solid Objects Greater than 2.5 mm	3	Protection Against Spraying Water
4	Protection Against Solid Objects Greater than 1 mm	4	Protection Against Splashing Water
5	Total Protection Against Dust — Limited Ingress (Dust Protected)	5	Protection Against Water Jets
6	Total Protection Against Dust (Dust-Tight)	6	Protection Against Heavy Seas
—	—	7	Protection Against the Effects of Immersion
—	—	8	Protection Against Submersion

The UL, NEMA and IEC organizations (and other international groups) define degrees of protection provided by electrical enclosures with respect to personnel, equipment within the housing and the ingress of water.

Subtle differences do exist between the test procedures and specifications of these organizations.

To claim ratings to NEMA Type specifications, the testing is performed and certified by the manufacturers themselves.

To comply to UL and IEC specifications, the manufacturers must submit product samples, materials used and other data to an independent testing laboratory before ratings can be claimed.

In addition, IEC "IP" ratings differ from NEMA Type in that they do not apply to protection against the risk of explosion or conditions such as humidity, corrosive gases, fungi or vermin. In addition, different parts of the equipment can have different degrees of protection and still comply.

Table 1-2 is a comparison of the NEMA/UL/IEC enclosure specifications to be used as an approximate reference only. **Do not use the table to convert from IEC to NEMA designations.**

Table 1-2. NEMA/UL/IEC Enclosure Type Cross-Reference — Approximate

NEMA Enclosure Rating	IP10	IP20	IP21	IP22	IP23	IP30	IP31	IP32	IP33	IP40	IP41	IP42	IP43	IP50	IP51	IP52	IP53	IP54	IP55	IP56	IP60	IP61	IP62	IP63	IP64	IP65	IP66	IP67	IP68
1	X	X	X	X	X																								
2	X	X	X	X	X																								
3	X	X	X	X	X	X	X	X	X	X	X	X	X	X	X	X	X	X	X	X	X	X	X	X					
3R	X	X	X	X	X	X	X																						
3S	X	X	X	X	X	X	X	X	X	X	X	X	X	X	X	X	X	X	X	X	X	X	X	X					
4	X	X	X	X	X	X	X	X	X	X	X	X	X	X	X	X	X	X	X	X	X	X	X	X	X	X			
4X	X	X	X	X	X	X	X	X	X	X	X	X	X	X	X	X	X	X	X	X	X	X	X	X	X	X			
6	X	X	X	X	X	X	X	X	X	X	X	X	X	X	X	X	X	X	X	X	X	X	X	X	X	X	X		
6P	X	X	X	X	X	X	X	X	X	X	X	X	X	X	X	X	X	X	X	X	X	X	X	X	X	X	X	X	X
12	X	X	X	X	X	X	X	X	X	X	X	X	X	X	X	X	X	X	X	X	X	X	X	X	X	X			
13	X	X	X	X	X	X	X	X	X	X	X	X	X	X	X	X	X	X	X	X	X	X	X	X	X	X			

Note: IEC 529 does not specify equivalents to NEMA Enclosure Types 7, 8, 9 or 10.

Table 1-3. IEC Environmental Enclosure Ratings — Examples of Designations

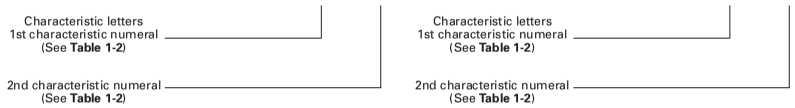

An enclosure with this designation is protected against the penetration of solid objects greater than 1.0 mm and against splashing water.

An enclosure with this designation is protected against the penetration of solid objects greater than 12 mm and against splashing water.

Motor Circuit Elements

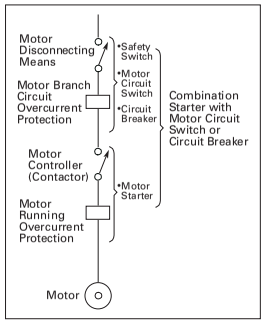

Figure 1-1. Typical Motor Circuit

DISCONNECT SWITCH — horsepower rated — located in sight of controller — arranged for padlocking in open position — disconnects motor and controller from ungrounded power conductors — position indicating — readily accessible — 115% carrying capacity of full load motor current — interrupting capacity of stalled motor current — may serve as disconnect for more than one motor if motors driving parts of single machine or motors all in single room within sight of disconnecting means, must equal sum of horsepower ratings to be disconnected — device may be general use switch, motor circuit switch or circuit breaker meeting code requirements — disconnecting means should contain motor branch-circuit short circuit and ground fault protection.

MOTOR RUNNING OVERCURRENT PROTECTION — called overload relay — protect motor and control apparatus against overheating due to motor overload — does not protect against short circuits or ground faults — selected to trip at not more than 125% full load motor current, 40°C rise motors — 115% all other motors — continuous duty motor protection — intermittent duty motors protected by branch circuit protection — sufficient time delay to permit motor to start and accelerate load without tripping — sensing devices (heater coils) in ungrounded conductor for single-phase — three sensing devices (heater coils) required for three-phase.

CONTACTOR — starting, stopping motor it controls — interrupt stalled motor current — horsepower rated — not lower than horsepower of motor controlled — contactor not in sight of connected motor must have disconnect capable of locking in open position or manually operable switch which will prevent contactor closing within sight of motor — interrupt all ungrounded power lines — manually or magnetically operated.

CONTROLLER OR STARTER — non-combination contains contactor and motor running overcurrent protection in one enclosure — starts, stops, protects and regulates motor — combination starters contain disconnecting means, branch short circuit protection in same enclosure. (See Motor Control Sections — three-phase, single-phase and DC.)

REDUCED VOLTAGE — restrictions in power supply capacity or machine design may require reduced voltage starting — motor connected to power supply at voltage lower than supply voltage — requires use of primary resistance, reactance or use of autotransformer — special motor designs such as part winding and wye-delta considered as reduced voltage starting.

Power Supplies

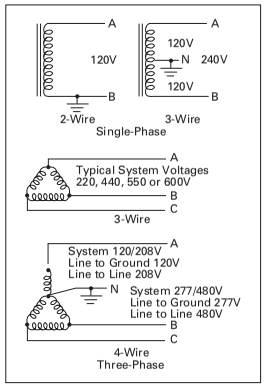

Figure 1-2. Single- and Three-Phase Power Supply

All electrical power supplied as AC or DC — primarily AC — generation, transmission and some distribution of power at high voltage — most power distribution at use voltage for industrial and residential is 600V and under — AC power generally at a frequency of 60 hertz — 50 and 25 hertz used in some specific areas — AC distribution at use location single- or three-phase — limited areas have two-phase — **SINGLE-PHASE —** two-wire, 120V one line grounded — 120/240V three-wire center line grounded — residential distribution, lighting, heat, fractional horsepower motors, business machines — **THREE-PHASE —** three-wire delta 220/440V, 550V — four-wire wye 120/208 and 277/480V neutral line grounded — primary industrial power distribution — main motor drives, integral horsepower motors, lighting, heating, fractional horsepower motors, business machines — used as three-phase or single-phase power supply.

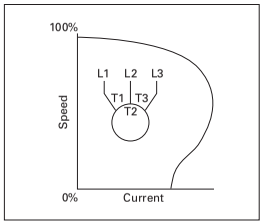

Figure 1-3. Squirrel Cage Speed

AC SQUIRREL CAGE MOTOR — single- or three-phase — single-phase requires starting winding — three-phase self-starting — stationary stator winding — no electrical connection to short circuited rotor — torque produced from magnetic reaction of stator and rotor fields — speed a function of supply frequency and number of electrical poles wound on stator — considered as constant speed even though speed decreases slightly with increased load — high inrush currents during starting on full voltage — rugged construction — easily serviced and maintained — high efficiency — good running power factor when delivering full load — requires motor control only for stator windings.

Functions of Control

Controller functions to start, stop, reverse, regulate and protect connected motor — when functions do not include speed regulation, device is known as a starter rather than controller — **general** applications of control functions on fans, pumps, heating and applications of variable torque and horsepower where relatively infrequent cycling is necessary — functions usually starting and stopping with or without motor running overcurrent protection — manual or magnetic control — **Commercial and Industrial** control functions for constant horsepower, constant or variable torque machine loads, constant torque metal working machinery, variable torque and horsepower fans and blowers, constant power heating, lighting, pumps and motors for all types of applications — may include speed regulation — good for cycling or infrequent starting and stopping — manual or magnetic.

Remote and Local Control

Local Control — controlling or sensing device, master switch or pilot device initiating operation located in same enclosure as controller.

Remote Control — controlling devices located at some other point than controller — may have more than one operating point with control devices connected in parallel or in series, depending on operating sequence required.

Wiring Diagrams

A symbolic representation of operation and function of control devices.

Jogging, Inching, Plugging Service

Jogging or inching — momentary operation of driven machine for small movement or positioning — requires non-maintained operator and electrical control circuit — control subject to motor inrush current on each jog or inch cycle — contactor derated where the contactor is opened or closed more than five times per minute or more than ten times in a 10-minute period.

Plugging — plugging stop or plugging reverse — reverse power supplied to motor — motor generates braking — contactors subjected to higher than normal motor inrush during plugging — requires reversing contactors — contactor derated for plugging service.

Two- and Three-Wire Control

Two-Wire Control

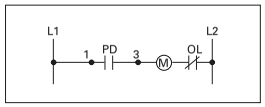

Figure 1-4. Two-Wire Wiring

Two-wire control is a control function which utilizes a maintained contact type of pilot device to provide low voltage release (LVR).

Three-Wire Control

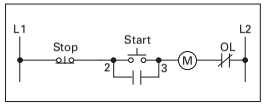

Figure 1-5. Three-Wire Wiring

Three-wire control is a control function which utilizes a momentary contact pilot device and a holding circuit contact to provide low voltage protection (LVP).

Panel Diagram — wiring, panel and pilot device layout — actual position of devices — power line bold and control lines light — circuit symbols show basic construction details.

Line Diagram — connection representation but not wiring configuration — sequence and function of devices but not location — symbols do not represent physical construction of device.

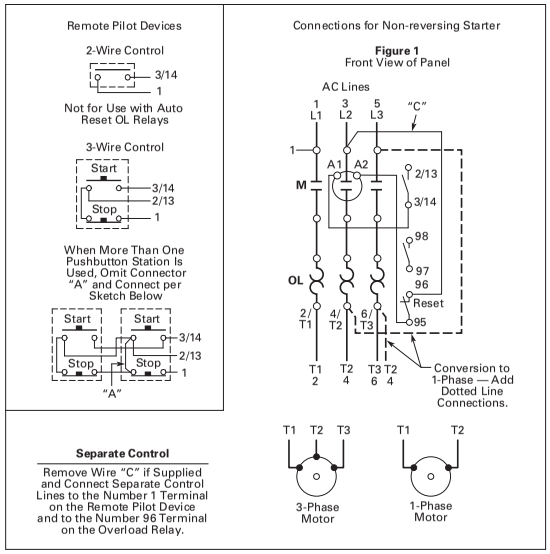

Figure 1-6. Typical Line Diagram

Catalog Parent Number — Tab & Page Number

A

AN16 . . . . . 3-27, 3-28, 3-30 – 3-35, 3-38 – 3-42, 3-45, 3-46, 6-29 – 6-48, 8-19 – 8-22, 9-4, 9-5, 11-12, 11-14, 11-15, 11-17
AN56 . . . . . 3-29, 3-36, 3-37, 3-43, 3-44, 11-13, 11-16
AN700 . . . . . 3-68 – 3-79
AV10 . . . . . 10-7 – 10-9, 10-11, 10-12, 10-14
A200 . . . . . 3-50 – 3-57
A202 . . . . . 5-8 – 5-10

B

B1A 13-5
B1B 13-5
B100 13-6
B3NO 16-21

C

CE400 . . . . . 3-4, 3-22, 4-5, 4-26
CN15 . . . . . 3-23 – 3-25
CN35 . . . . . 5-6, 5-7, 5-10
CN55 3-26
CV10 10-6
C30 16-30
C30CN 5-5
C306 . . . . . 17-5, 17-6, 17-16 – 17-18
C316 16-8
C320 . . . . . 8-4, 16-2, 16-4, 16-7, 16-10, 16-11, 16-28, 16-30 – 16-33
C321 . . . . . 16-9, 16-10, 17-15
C325 16-39
C335 16-7
C341 . . . . . 12-3, 16-13
C350 16-9
C351 . . . . . 8-8, 8-15, 16-12
C400 . . . . . 3-3, 3-21, 3-67, 4-4, 4-25, 5-4, 6-20, 7-5, 8-18, 10-5
C400T 6-5
C799 . . . . . 16-28, 16-29

D

DS 8-4

E

ECA05 3-62
ECA16 3-63
ECA18 3-64
ECA22 3-65
ECC03 5-5
ECC04 5-5
ECH16 9-4
ECH18 9-4
ECH22 9-5
ECH24 9-5
ECLC 5-2
ECL03 . . . . . 5-6, 5-7
ECL04 . . . . . 5-8, 5-9
ECL12 5-10
ECL13 5-10
ECL14 5-10
ECL15 5-10
ECN01 . . . . . 3-23 – 3-25
ECN02 3-26
ECN05 . . . . . 3-27, 3-28, 11-12
ECN06 . . . . . 3-29, 11-13
ECN07 . . . . . 3-30, 11-14
ECN08 3-31
ECN16 . . . . . 3-32 – 3-35
ECN17 . . . . . 3-36, 3-37
ECN18 . . . . . 3-38, 3-39
ECN22 . . . . . 3-40 – 3-42, 11-15
ECN23 . . . . . 3-43, 3-44, 11-16
ECN24 . . . . . 3-45, 3-46, 11-17
ECN33 3-68
ECN34 3-69
ECN35 3-70
ECN36 . . . . . 3-71, 3-72
ECN37 . . . . . 3-73, 3-74
ECN38 . . . . . 3-75, 3-76
ECN40 3-78
ECN41 3-79
ECN42 . . . . . 6-21, 6-22
ECN43 . . . . . 6-23 – 6-26
ECN44 . . . . . 6-27, 6-28
ECN45 6-29
ECN46 . . . . . 6-30, 6-31
ECN47 . . . . . 6-32, 6-33
ECN48 6-34
ECN49 . . . . . 6-35 – 6-38
ECN50 . . . . . 6-39, 6-40
ECN51 . . . . . 6-41, 6-42
ECN52 . . . . . 6-43 – 6-46
ECN53 . . . . . 6-47, 6-48
ECN54 8-9
ECN55 8-10
ECN64 6-49
ECN65 6-49
ECN68 8-19
ECN69 . . . . . 8-20, 8-21
ECN70 8-22
ECP54 . . . . . 8-15, 8-16
ECP55 8-16
ECS80 7-9
ECS81 7-10
ECS82 7-11
ECS90 . . . . . 6-6, 6-7
ECS91 . . . . . 6-9, 6-10
ECS92 . . . . . 6-12 – 6-14
ECS93 6-8
ECS94 6-11
ECS95 . . . . . 6-15, 6-16
ECT01 3-5
ECT02 3-6
ECT05 . . . . . 3-7, 11-6
ECT06 . . . . . 3-8, 11-7, 11-8
ECT07 11-8
ECT16 . . . . . 3-9, 3-10
ECT17 . . . . . 3-11, 3-12
ECT22 . . . . . 3-13, 3-14, 11-9
ECT23 . . . . . 3-15, 3-16, 11-10, 11-11
ECT24 11-11
ECT54 8-6
ECT55 8-7
ECV01 10-6
ECV02 10-6
ECV05 10-7
ECV06 10-7
ECV07 10-8
ECV16 10-9
ECV17 10-10
ECV18 10-11
ECV22 10-12
ECV23 10-13
ECV24 10-14
ECV54 8-13
ECV55 8-13
ECX09 . . . . . 4-6, 4-7
ECX10 . . . . . 4-8, 4-9
ECX11 . . . . . 4-10, 4-11
ECX19 . . . . . 4-12, 4-13
ECX20 . . . . . 4-14, 4-15
ECX25 . . . . . 4-16, 4-17
ECX26 . . . . . 4-18, 4-19
ECX76 4-27
ECX77 4-28
ECX78 4-29
EC216 . . . . . 3-50, 3-51
EC218 . . . . . 3-52, 3-53
EC222 . . . . . 3-54, 3-55
EC224 . . . . . 3-56, 3-57
EC254 8-11
EC255 8-12
EMA 16-2
EMA1 16-36
EMA2 17-15
EMA6 16-37
EMA7 . . . . . 16-36, 16-37, 17-15
EMA8 17-15
EMA9 16-37
EMC 17-2, 17-3, 17-14, 17-15
EMF 17-3
EMFR 17-15
EML 16-3
EML2 16-37
EML3 16-37
EMMB 17-15
EMM1 16-37
EMR 16-3
EMS3 16-36
EMS4 16-36
EMU 17-2, 17-14
ENC39 3-77
E02N 17-14
E03N 17-14
E04N 17-14
E05N 17-14
E06N 17-14

F

FH 12-7, 12-8, 13-7, 16-19, 16-20, 16-39
F56 . . . . . 16-21, 16-34

H

H200 16-6
H201 16-6
H202 16-6
H210 16-6
H211 16-6

J

J02 . . . . . 10-6, 16-18, 16-22, 16-34, 16-35, 16-39
J1C 16-18, 16-34
J11 . . . . . 10-6, 16-18, 16-22, 16-34, 16-35, 16-39
J20 . . . . . 10-6, 16-18, 16-22, 16-34, 16-35, 16-39

K

K13 16-38
K64 16-38

L

LK 13-5

M

MSH 13-3
MSLG 13-2
MSPT 13-2
MST 13-3
MS1 13-2
MVX . . . . . 7-9 – 7-11, 16-38
M-33 16-21
M-34 16-21
M-35 16-21
M-36 16-21

N

N02N 17-2
N03N 17-2
N04N 17-2
N05N 17-2
N06N 17-2
N101 . . . . . 3-7, 3-9, 3-10, 3-13, 3-14, 11-6, 11-8, 11-9, 11-11
N111 3-5

Catalog Parent Number — Tab & Page Number

N501 . . . . . 3-8, 3-11, 3-12, 3-15, 3-16, 11-7, 11-8, 11-10, 11-11
N511 3-6

P

PLK 16-14
PNC 16-21, 16-34
PNO 16-34
PN0 16-21
PSSD 16-37
PSS2 16-37
PSS5 16-37

R

R56 . . . . . 16-21, 16-34

S

SS-56 . . . . . 16-21, 16-34
S752 . . . . . 6-6, 6-9, 6-12
S801 . . . . . 6-7, 6-10, 6-13, 6-14
S811 . . . . . 6-8, 6-11, 6-15, 6-16

V

V200 10-4
V201 10-4
V210 . . . . . 10-7, 10-10, 10-13
V211 10-6

W

WACM 3-61, 16-17
WBASE 16-15
WBELL 16-14
WCK 17-7
WCOIL 17-7
WDIN 16-15
WDIP 16-15
WLED 16-15
WMETER 3-61, 16-17
WPBF 3-61, 16-17
WPBR 3-61, 16-17
WPB2 . . . . . 3-61, 16-17
WPONI 16-14
WRC1 16-15
WRC7 16-15
WRLT 16-15
WRST 16-15
W04 16-14
W11 16-14
W13 16-14
W200 . . . . . 3-62 – 3-65
W22 16-14
W31 16-14
W40 16-14

X

XTAE . . . . . 4-6, 4-7, 4-10 – 4-13, 4-16, 4-17
XTAR 4-8, 4-9, 4-14, 4-15, 4-18, 4-19
XTCER 17-13
XTCEX . . . . . 16-24 – 16-26
XTPR . . . . . 4-27 – 4-29

Numerics

1D89 17-22
10-65 . . . . . 17-5, 17-18
1250 . . . . . 17-9, 17-10
1255 17-11
1268 17-9
17-18 . . . . . 17-4, 17-17, 17-18
17-89 . . . . . 17-4, 17-18
179C 17-21
180C 10-6, 16-39
20146 17-5
20427 17-18
20428 17-5
20429 17-5
2050 . . . . . 16-22, 17-11, 17-12
2057 16-22
2066 17-11
20848 17-6
20849 17-6
20862 . . . . . 17-17, 17-18
2119 16-22
22178 . . . . . 17-17, 17-18
22275 17-19
22276 17-19
22278 17-19
22586 17-19
23349 17-5
3354 17-8
3463 . . . . . 16-22, 16-35
371B 17-9
372B 17-10
373B 17-9
38A7 17-8
3915 17-21
42-35 . . . . . 17-5, 17-6
438C 17-12
461A 17-11
477B 17-11
48-10 . . . . . 17-5, 17-19
48-19 . . . . . 17-4, 17-17, 17-18
503C 17-9, 17-10
505C 17-9, 17-11
5250 . . . . . 17-10, 17-11
5264 . . . . . 17-8, 17-11, 17-12
550D 17-8
567D 16-22
578D 16-22, 16-35, 17-10
6-26 17-5
626B 17-10
6262A 12-6
6263A . . . . . 12-3 – 12-5
6-288 17-19
6-294 17-19
6379 16-22
640C 17-11
6-43 . . . . . 17-4, 17-18, 17-20
6-44 . . . . . 17-5, 17-20
6-45 . . . . . 17-5, 17-20
646C 17-11
650C 17-11
655C 17-11
6-571 17-6
6-601 . . . . . 17-5, 17-19
6-613 17-6
6-621 17-19
6-622 17-19
6-648 17-5
6-65 . . . . . 17-4, 17-17, 17-18, 17-20
6714 . . . . . 17-9, 17-10
672B 17-9, 17-10
7856 17-9
7858 16-22
7864 . . . . . 16-22, 16-35, 17-9
7874 . . . . . 17-21, 17-22
80-19 16-39
818D 16-22, 16-35
831D 17-11
843D 16-22, 16-35, 17-10
9084 . . . . . 16-22, 16-35, 17-10
9085 17-22
9-1891 . . . . . 17-5, 17-19, 17-20
9-2650 . . . . . 17-4, 17-16
9-2654 17-6
9-2664 17-6
9-2698 . . . . . 17-5, 17-6, 17-19
9-2703 . . . . . 17-4, 17-17, 17-18, 17-20
9-2705 . . . . . 17-5, 17-6
9-2756 . . . . . 17-4, 17-18, 17-20
9-2875 . . . . . 17-4, 17-16, 17-20
9-2876 . . . . . 17-4, 17-16, 17-20
9-3006 . . . . . 17-5, 17-19
9-3007 17-5
9-3242 17-20
9917 17-11
99-3590 16-14
9944 16-22

NEMA Contactors & Starters

Contents

Description — *Page*

IT. Electro-Mechanical Control
- **Product Family Overview**
  - Product Description 3-2
  - Catalog Number Selection 3-2
  - Cover Control 3-3
- **Contactors**
  - Product Selection 3-5
- **Non-combination Starters**
  - Product Selection 3-7
- **Combination Starters — Fusible and Non-fusible**
  - Product Selection 3-9
- **Combination Starters — Circuit Breaker**
  - Product Selection 3-13
- **Wiring Diagrams** 3-17

Freedom Full Voltage Control
- **Product Family Overview**
  - Product Description 3-18
  - Catalog Number Selection 3-20
  - Cover Control 3-21
- **Contactors**
  - Product Selection 3-23
- **Non-combination Starters**
  - Product Selection 3-27
- **Combination Starters — Fusible and Non-fusible**
  - Product Selection 3-32
- **Combination Starters — Circuit Breaker**
  - Product Selection 3-40
- **Wiring Diagrams** 3-47

A200 Full Voltage Control
- Product Selection 3-50

Advantage Full Voltage Control
- **Product Family Overview**
  - Product Description 3-58
  - Catalog Number Selection 3-60
  - Cover Control 3-61
- **Non-combination Starters** 3-62
- **Combination Starters — Fusible and Non-fusible** 3-63
- **Combination Starters — Circuit Breaker** 3-65
- **Wiring Diagrams** 3-66

Freedom Multispeed Starters
- **Product Family Overview**
  - Cover Control 3-67
- **Non-combination**
  - Product Selection 3-68
- **Combination**
  - Product Selection 3-71
- **Wiring Diagrams** 3-80

NEMA IT. Control

Product Description

Eaton's Cutler-Hammer® Intelligent Technologies (*IT.*) Electro-Mechanical line of Contactors and Starters is the result of a substantial engineering, manufacturing and marketing effort involving extensive customer input, combined with new advances in solid-state technology. *IT.* Electro-Mechanical products have greatly increased functionality, significantly reduced size and utilize the benefits of 24V DC control. The exclusive Pulse Width Modulation (PWM) control and digital microprocessor generate a minimized DC value which reduces energy to the contact block and provides the most compact system available.

Standards and Certifications

Note: See **Page 18-2** for additional information on Standards and Certifications that apply to all Cutler-Hammer Enclosed Control products.

- UL Listed
- cUL Listed (indicates appropriate CSA Standard investigation)
- ABS Type Approved

Catalog Number Selection

Table 3-1. NEMA Intelligent Technologies (*IT.*) Line Enclosed Control Catalog Numbering System

E C T 2 2 1 1 A A B - A

Design
T = *IT.* — NEMA

Class	Table
01 = Non-reversing Contactor — 3-Pole	3-6
02 = Reversing Contactor — 3-Pole	3-7
05 = Non-combination Non-reversing Starter	3-8
06 = Non-combination Reversing Starter	3-9
16 = Combination Non-reversing Starter — Fusible Disconnect	3-10
Combination Non-reversing Starter — Non-fusible Disconnect	3-11
17 = Combination Reversing Starter — Fusible Disconnect	3-12
Combination Reversing Starter — Non-fusible Disconnect	3-13
22 = Combination Non-reversing Starter — Circuit Breaker	3-14
23 = Combination Reversing Starter — Circuit Breaker	3-15

NEMA Size
A = Size 00; 0 = Size 0; 1 = Size 1; 2 = Size 2; 3 = Size 3; 4 = Size 4; 5 = Size 5

Enclosure Type
1 = Type 1 — General Purpose
2 = Type 3R — Rainproof
3 = Type 4 — Painted Steel
4 = Type 4X — Watertight
8 = Type 12 — Dust-Tight
9 = Type 4X — 316-Grade Stainless Steel

Motor Voltage/Power Supply ①
B = 230V; C = 460V; D = 575V; E = 200V; Q = 24V DC ②; L = 380V/50 Hz

Cover Control — Starters
Type 1 Non-comb., **Table 3-3**
All Others, **Table 3-4**
E22 Style Comb., **Table 3-6**

Contactors
3 = 3 Poles

Solid-State ③ Overload Range

Disconnect Fuse Clip
A = None; B = 30A/250V; C = 30A/600V; D = 60A/250V; E = 60A/600V; F = 100A/250V; G = 100A/600V; H = 200A/250V; J = 200A/600V; K = 400A/250V; L = 400A/600V

HMCP/E or Breaker Ratings
A = None; B = 3A; C = 7A; D = 15A; E = 30A; F = 50A; W = 70A; G = 100A/RC3; X = 100A/TC3; H = 150A; J = 250A; K = 400A

Modification Codes
See **Page 16-40**

① If CPT is selected, Power Supply to be 120V AC – 24V DC.
② Power supply omitted.
③ See **Table 3-2**, Solid-State Overload Range Codes.

Table 3-2. *IT.* Solid-State Overload Range Codes

FLA Range	Size 00	0	1	2	3	4	5
.25 – .80	A	A	A	—	—	—	—
.59 – 1.9	B	B	B	—	—	—	—
1.4 – 4.4	C	C	C	—	—	—	—
2.8 – 9.0	D	D	D	—	—	—	—
5.0 – 16	—	—	F	—	—	—	—
6.3 – 20	—	G	—	—	—	—	—
8.4 – 27	—	—	H	—	—	—	—
10 – 32	—	J	—	—	—	—	—
14 – 45	—	—	—	K	—	—	—
16 – 50	—	—	L	—	—	—	—

FLA Range	Size 00	0	1	2	3	4	5
28 – 90	—	—	—	—	M	—	—
31 – 100	—	—	—	N	—	—	—
42 – 135	—	—	—	—	—	P	—
63 – 200	—	—	—	—	—	R	—
84 – 270	—	—	—	—	—	—	S
131 – 420	—	—	—	—	—	—	T

Cover Control

Non-combination Starters

Control Power Transformer (CPT) may be required.

Combination Starters

- Cover control for Combination Starters uses 10250T style devices as standard.
- E22 style cover control options are available (**Table 3-5**).
- Selector switches are maintained with lever operators.
- Pushbuttons are momentary type with extended pushbutton.
- The kit includes hardware and connecting wires (where possible).
- For factory installed control devices other than shown below, refer to Modification Codes, **Page 16-40**.

Type 1 Cover Control

Table 3-3. Type 1 Non-combination Cover Control

Description	Factory Installed Flange Control ①	Field Installation Kits
	Position 9 Code	Catalog Number
Non-reversing		
No Cover Mounted Pilot Devices	A	C400GK0
START/STOP Pushbuttons	B	C400GK1
with Red RUN Pilot Light	C	C400GK12 ②
with Red RUN/Green OFF Lights	D	C400GK16 ②
HAND/OFF/AUTO Selector Switch	H	C400GK3
with Red RUN Pilot Light	J	C400GK32 ②
with Red RUN/Green OFF Lights	K	C400GK36 ②
Red RUN Pilot Light	P	C400GK42 ②
Green OFF	Q	C400GK41 ②
Red RUN/Green OFF Pilot Lights	R	C400GK46 ②
Reversing		
No Cover Mounted Pilot Devices	A	C400GK0
FOR/REV/STOP Pushbuttons	B	C400GR1
with 2 Red Pilot Lights	C	C400GR14 ②
UP/STOP/DOWN Pushbuttons	E	C400GR2
with 2 Red Pilot Lights	F	C400GR24 ②
Two Red Pilot Lights	P	C400GK44 ②
One Green Pilot Light	Q	C400GK41 ②

① For more available factory installed flange control, see **Table 3-4**.

② Add Code Letter from the table below to Catalog Number for voltage — Kits only. Example: C400T9**B**.

Rating	Code Letter	Rating	Code Letter	Rating	Code Letter
120V 60 Hz	A	277V 60 Hz	H	480V 60 Hz	C
208V 60 Hz	E	380V 50 Hz	L	600V 60 Hz	D
240V 60 Hz	B				

10250T Selector Switch

Table 3-4. Type 1 Combination and All Type 3R, 4X and 12 Cover Control ③

Description	Factory Installed Flange Control	Field Installation Kits
	Position 9 Code	Catalog Number
Non-reversing		
No Cover Mounted Pilot Devices	A	—
START/STOP Pushbuttons	B	C400T1
with Red RUN Pilot Light	C	—
with Red RUN/Green OFF Lights	D	—
ON/OFF Pushbuttons	E	C400T2
with Red RUN Pilot Light	F	—
with Red RUN/Green OFF Lights	G	—
HAND/OFF/AUTO Selector Switch	H	C400T12
with Red RUN Pilot Light	J	—
with Red RUN/Green OFF Lights	K	—
START Pushbutton	L	C400T3
ON Pushbutton	M	C400T4
OFF Pushbutton	N	C400T5
Red RUN Pilot Light	P	C400T9 ④
Green OFF	Q	C400T10 ④
Red RUN/Green OFF Pilot Lights	R	C400T11 ④
START/STOP Selector Switch	S	C400T13
with Red RUN Pilot Light	T	—
with Red RUN/Green OFF Lights	U	—
ON/OFF Selector Switch	V	C400T14
with Red RUN Pilot Light	W	—
with Red RUN/Green OFF Lights	X	—
Reversing		
No Cover Mounted Pilot Devices	A	—
FOR/REV/STOP Pushbuttons	B	C400T6
with 2 Red Pilot Lights	C	—
with 2 Red/1 Green Pilot Lights	D	—
UP/STOP/DOWN Pushbuttons	E	—
with 2 Red Pilot Lights	F	—
FOR/OFF/REV Selector Switch	H	C400T15
with 2 Red Pilot Lights	J	—
with 2 Red/1 Green Pilot Lights	K	—
Two Red Pilot Lights	P	⑤
One Green Pilot Light	Q	C400T10 ④
Two Red/One Green Pilot Lights	R	—
OPEN/OFF/CLOSE Selector Switch	V	C400T16
with 2 Red Pilot Lights	W	—
with 2 Red/1 Green Pilot Lights	X	—

③ For Type 1 Non-combination field installation kits, see **Table 3-3**.

④ Add Code Letter from the table below to Catalog Number for voltage — Kits only. Example: C400T9**B**.

Rating	Code Letter	Rating	Code Letter	Rating	Code Letter
120V 60 Hz	A	277V 60 Hz	H	480V 60 Hz	C
208V 60 Hz	E	380V 50 Hz	L	600V 60 Hz	D
240V 60 Hz	B				

⑤ Order Quantity (2) of **C400T10**.

E22 Selector Switch

Table 3-5. Type 1, 3R, 4X and 12 E22 Style Combination Starter Cover Control

Description	Factory Installed ①	Field Installation Kits
	Position 9 Cover Control Code	Combination Only
		Catalog Number
Non-reversing		
No Cover Mounted Pilot Devices	A	—
START/STOP Pushbuttons (PB)	B	CE400T01
START/STOP PB & Red RUN Light	C	CE400T02 ②
START/STOP PB, Red RUN, & Green STOPPED Light	D	CE400T03 ②
HAND/OFF/AUTO Selector Switch (SS)	H	CE400T04
H-O-A SS & Red RUN Light	J	CE400T05 ②
H-O-A SS, Red RUN, & Green STOPPED Light	K	CE400T06 ②
Red RUN Pilot Light	P	CE400T10 ②
Green Off Pilot Light	Q	CE400T11 ②
Red RUN/Green OFF Pilot Light	R	CE400T12 ②
ON/OFF Selector Switch (SS)	S	CE400T07
ON/OFF SS, Red RUN Light	T	CE400T08 ②
ON/OFF SS, Red RUN, & Green STOPPED Light	U	CE400T09 ②
Reversing		
No Cover Mounted Pilot Devices	A	—
FWD/REV/STOP Pushbuttons (PB)	B	CE400T50
FWD/REV/STOP PB + Red FWD & REV Lights	C	CE400T51 ②
FWD/REV/STOP PB, Red FWD/REV, & Green STOPPED	D	CE400T52 ②
FOR/OFF/REV Selector Switch (SS)	H	CE400T53
FOR/OFF/REV SS + Red FWD & REV Lights	J	CE400T54 ②
FOR/OFF/REV SS, Red FWD/REV, & Green STOPPED	K	CE400T55 ②
OPEN/OFF/CLOSE Selector Switch (SS)	V	CE400T56
OPEN/OFF/CLOSE SS + Red FWD & REV Lights	W	CE400T57 ②
OPEN/OFF/CLOSE SS, Red FWD/REV, & Green STOPPED	X	CE400T58 ②

① To include any of the above cover controls, place the control code character in position 9 of your Catalog Number and add Mod Code **C29**.
Example: ECT1604**ED**B-_**C29**.
Full voltage non-reversing fusible starter with START/STOP pushbutton with red RUN and green OFF pilot lights.

② Suffix for lights (required for field installed kits only) in the table below:

Rating	Code Letter	Rating	Code Letter	Rating	Code Letter
120V 60 Hz	A	277V 60 Hz	H	480V 60 Hz	C
208V 60 Hz	E	380V 50 Hz	L	600V 60 Hz	D
240V 60 Hz	B				

Features

- Full Voltage
- 3-Phase Electromechanical

Type 1 IT. NEMA Contactor

Product Selection

Table 3-6. Class ECT01 — Non-reversing Contactor — 3-Pole

NEMA Size	Motor Voltage	Max. hp	Coil ① Voltage	3-Pole Type 1	3-Pole Type 3R	3-Pole Type 4X ②	3-Pole Type 12	3-Pole Component Contactor (Open)
				Catalog Number	Catalog Number	Catalog Number	Catalog Number	Catalog Number
00	—	—	24V DC	ECT01A1QAA	ECT01A2QAA	ECT01A4QAA	ECT01A8QAA	N111BSAX3N
	200/208	1-1/2		ECT01A1EAA	ECT01A2EAA	ECT01A4EAA	ECT01A8EAA	
	230/240	1-1/2		ECT01A1BAA	ECT01A2BAA	ECT01A4BAA	ECT01A8BAA	
	460/480	2		ECT01A1CAA	ECT01A2CAA	ECT01A4CAA	ECT01A8CAA	
	575/600	2		ECT01A1DAA	ECT01A2DAA	ECT01A4DAA	ECT01A8DAA	
	380/50 Hz	1-1/2		ECT01A1LAA	ECT01A2LAA	ECT01A4LAA	ECT01A8LAA	
0	—	—	24V DC	ECT0101QAA	ECT0102QAA	ECT0104QAA	ECT0108QAA	N111BS0X3N
	200/208	3		ECT0101EAA	ECT0102EAA	ECT0104EAA	ECT0108EAA	
	230/240	3		ECT0101BAA	ECT0102BAA	ECT0104BAA	ECT0108BAA	
	460/480	5		ECT0101CAA	ECT0102CAA	ECT0104CAA	ECT0108CAA	
	575/600	5		ECT0101DAA	ECT0102DAA	ECT0104DAA	ECT0108DAA	
	380/50 Hz	5		ECT0101LAA	ECT0102LAA	ECT0104LAA	ECT0108LAA	
1	—	—	24V DC	ECT0111QAA	ECT0112QAA	ECT0114QAA	ECT0118QAA	N111CS1X3N
	200/208	7-1/2		ECT0111EAA	ECT0112EAA	ECT0114EAA	ECT0118EAA	
	230/240	7-1/2		ECT0111BAA	ECT0112BAA	ECT0114BAA	ECT0118BAA	
	460/480	10		ECT0111CAA	ECT0112CAA	ECT0114CAA	ECT0118CAA	
	575/600	10		ECT0111DAA	ECT0112DAA	ECT0114DAA	ECT0118DAA	
	380/50 Hz	10		ECT0111LAA	ECT0112LAA	ECT0114LAA	ECT0118LAA	
2	—	—	24V DC	ECT0121QAA	ECT0122QAA	ECT0124QAA	ECT0128QAA	N111DS2X3N
	200/208	10		ECT0121EAA	ECT0122EAA	ECT0124EAA	ECT0128EAA	
	230/240	15		ECT0121BAA	ECT0122BAA	ECT0124BAA	ECT0128BAA	
	460/480	25		ECT0121CAA	ECT0122CAA	ECT0124CAA	ECT0128CAA	
	575/600	25		ECT0121DAA	ECT0122DAA	ECT0124DAA	ECT0128DAA	
	380/50 Hz	25		ECT0121LAA	ECT0122LAA	ECT0124LAA	ECT0128LAA	
3	—	—	24V DC	ECT0131QAA	ECT0132QAA	ECT0134QAA	ECT0138QAA	N111ES3X3N
	200/208	25		ECT0131EAA	ECT0132EAA	ECT0134EAA	ECT0138EAA	
	230/240	30		ECT0131BAA	ECT0132BAA	ECT0134BAA	ECT0138BAA	
	460/480	50		ECT0131CAA	ECT0132CAA	ECT0134CAA	ECT0138CAA	
	575/600	50		ECT0131DAA	ECT0132DAA	ECT0134DAA	ECT0138DAA	
	380/50 Hz	50		ECT0131LAA	ECT0132LAA	ECT0134LAA	ECT0138LAA	
4	—	—	24V DC	ECT0141QAA	ECT0142QAA	ECT0144QAA	ECT0148QAA	N111ES4X3N
	200/208	40		ECT0141EAA	ECT0142EAA	ECT0144EAA	ECT0148EAA	
	230/240	50		ECT0141BAA	ECT0142BAA	ECT0144BAA	ECT0148BAA	
	460/480	100		ECT0141CAA	ECT0142CAA	ECT0144CAA	ECT0148CAA	
	575/600	100		ECT0141DAA	ECT0142DAA	ECT0144DAA	ECT0148DAA	
	380/50 Hz	75		ECT0141LAA	ECT0142LAA	ECT0144LAA	ECT0148LAA	
5	—	—	24V DC	ECT0151QAA	ECT0152QAA	ECT0154QAA	ECT0158QAA	N111FS5X3N
	200/208	75		ECT0151EAA	ECT0152EAA	ECT0154EAA	ECT0158EAA	
	230/240	100		ECT0151BAA	ECT0152BAA	ECT0154BAA	ECT0158BAA	
	460/480	200		ECT0151CAA	ECT0152CAA	ECT0154CAA	ECT0158CAA	
	575/600	200		ECT0151DAA	ECT0152DAA	ECT0154DAA	ECT0158DAA	
	380/50 Hz	150		ECT0151LAA	ECT0152LAA	ECT0154LAA	ECT0158LAA	

① All *IT.* Contactors and Starters are furnished with 24V DC coil and control power supply. The eighth digit **Q** denotes separate 24V DC control source.
② The Catalog Numbers listed in the Type 4X column are for Type 4X 304-Grade Stainless Steel, as indicated by the seventh digit **4**. Example: ECT01A**4**QAA. To order Type 4X 316-Grade Stainless Steel, change that digit to **9**. To order Type 4 Painted Steel, change that digit to **3**. To order Non-metallic, change that digit to **5**. For details on these Alternate Enclosures, see **Tab 14**.

Cover Control ..... **Page 3-3**
Wiring Diagrams ..... **Page 3-17**
Dimensions ..... **Page 15-2**
Accessories ..... **Page 16-2**
Renewal Parts ..... **Page 17-2**
Technical Data ..... **Page 18-2**

Table 3-7. Class ECT02 — Reversing Contactor — 3-Pole

NEMA Size	Motor Voltage	Max. hp	Coil ① Voltage	3-Pole Type 1	3-Pole Type 3R	3-Pole Type 4X ②	3-Pole Type 12	3-Pole Component Contactor (Open)
				Catalog Number	Catalog Number	Catalog Number	Catalog Number	Catalog Number
00	—	—	24V DC	ECT02A1QAA	ECT02A2QAA	ECT02A4QAA	ECT02A8QAA	N511BSAX3N
	200/208	1-1/2		ECT02A1EAA	ECT02A2EAA	ECT02A4EAA	ECT02A8EAA	
	230/240	1-1/2		ECT02A1BAA	ECT02A2BAA	ECT02A4BAA	ECT02A8BAA	
	460/480	2		ECT02A1CAA	ECT02A2CAA	ECT02A4CAA	ECT02A8CAA	
	575/600	2		ECT02A1DAA	ECT02A2DAA	ECT02A4DAA	ECT02A8DAA	
	380/50 Hz	1-1/2		ECT02A1LAA	ECT02A2LAA	ECT02A4LAA	ECT02A8LAA	
0	—	—	24V DC	ECT0201QAA	ECT0202QAA	ECT0204QAA	ECT0208QAA	N511BS0X3N
	200/208	3		ECT0201EAA	ECT0202EAA	ECT0204EAA	ECT0208EAA	
	230/240	3		ECT0201BAA	ECT0202BAA	ECT0204BAA	ECT0208BAA	
	460/480	5		ECT0201CAA	ECT0202CAA	ECT0204CAA	ECT0208CAA	
	575/600	5		ECT0201DAA	ECT0202DAA	ECT0204DAA	ECT0208DAA	
	380/50 Hz	5		ECT0201LAA	ECT0202LAA	ECT0204LAA	ECT0208LAA	
1	—	—	24V DC	ECT0211QAA	ECT0212QAA	ECT0214QAA	ECT0218QAA	N511CS1X3N
	200/208	7-1/2		ECT0211EAA	ECT0212EAA	ECT0214EAA	ECT0218EAA	
	230/240	7-1/2		ECT0211BAA	ECT0212BAA	ECT0214BAA	ECT0218BAA	
	460/480	10		ECT0211CAA	ECT0212CAA	ECT0214CAA	ECT0218CAA	
	575/600	10		ECT0211DAA	ECT0212DAA	ECT0214DAA	ECT0218DAA	
	380/50 Hz	10		ECT0211LAA	ECT0212LAA	ECT0214LAA	ECT0218LAA	
2	—	—	24V DC	ECT0221QAA	ECT0222QAA	ECT0224QAA	ECT0228QAA	N511DS2X3N
	200/208	10		ECT0221EAA	ECT0222EAA	ECT0224EAA	ECT0228EAA	
	230/240	15		ECT0221BAA	ECT0222BAA	ECT0224BAA	ECT0228BAA	
	460/480	25		ECT0221CAA	ECT0222CAA	ECT0224CAA	ECT0228CAA	
	575/600	25		ECT0221DAA	ECT0222DAA	ECT0224DAA	ECT0228DAA	
	380/50 Hz	25		ECT0221LAA	ECT0222LAA	ECT0224LAA	ECT0228LAA	
3	—	—	24V DC	ECT0231QAA	ECT0232QAA	ECT0234QAA	ECT0238QAA	N511ES3X3N
	200/208	25		ECT0231EAA	ECT0232EAA	ECT0234EAA	ECT0238EAA	
	230/240	30		ECT0231BAA	ECT0232BAA	ECT0234BAA	ECT0238BAA	
	460/480	50		ECT0231CAA	ECT0232CAA	ECT0234CAA	ECT0238CAA	
	575/600	50		ECT0231DAA	ECT0232DAA	ECT0234DAA	ECT0238DAA	
	380/50 Hz	50		ECT0231LAA	ECT0232LAA	ECT0234LAA	ECT0238LAA	
4	—	—	24V DC	ECT0241QAA	ECT0242QAA	ECT0244QAA	ECT0248QAA	N511ES4X3N
	200/208	40		ECT0241EAA	ECT0242EAA	ECT0244EAA	ECT0248EAA	
	230/240	50		ECT0241BAA	ECT0242BAA	ECT0244BAA	ECT0248BAA	
	460/480	100		ECT0241CAA	ECT0242CAA	ECT0244CAA	ECT0248CAA	
	575/600	100		ECT0241DAA	ECT0242DAA	ECT0244DAA	ECT0248DAA	
	380/50 Hz	75		ECT0241LAA	ECT0242LAA	ECT0244LAA	ECT0248LAA	
5	—	—	24V DC	ECT0251QAA	ECT0252QAA	ECT0254QAA	ECT0258QAA	N511FS5X3N
	200/208	75		ECT0251EAA	ECT0252EAA	ECT0254EAA	ECT0258EAA	
	230/240	100		ECT0251BAA	ECT0252BAA	ECT0254BAA	ECT0258BAA	
	460/480	200		ECT0251CAA	ECT0252CAA	ECT0254CAA	ECT0258CAA	
	575/600	200		ECT0251DAA	ECT0252DAA	ECT0254DAA	ECT0258DAA	
	380/50 Hz	150		ECT0251LAA	ECT0252LAA	ECT0254LAA	ECT0258LAA	

① All *IT.* Contactors and Starters are furnished with 24V DC coil and control power supply. The eighth digit **Q** denotes separate 24V DC control source.
② The Catalog Numbers listed in the Type 4X column are for Type 4X 304-Grade Stainless Steel, as indicated by the seventh digit **4**. Example: ECT02A**4**QAA. To order Type 4X 316-Grade Stainless Steel, change that digit to **9**. To order Type 4 Painted Steel, change that digit to **3**. To order Non-metallic, change that digit to **5**. For details on these Alternate Enclosures, see **Tab 14**.

Cover Control ..... **Page 3-3**
Wiring Diagrams ..... **Page 3-17**
Dimensions ..... **Page 15-2**
Accessories ..... **Page 16-2**
Renewal Parts ..... **Page 17-2**
Technical Data ..... **Page 18-2**

Features

- Full Voltage
- 3-Phase Electromechanical
- Solid-State Overload Relay

Type 12 Non-combination IT. Starter

Product Selection

Table 3-8. Class ECT05 — Non-combination Non-reversing Starter

NEMA Size	Motor Voltage	Max. hp	Coil ① Voltage	3-Pole Type 1	3-Pole Type 3R	3-Pole Type 4X ②	3-Pole Type 12	3-Pole Component Starter (Open)
				Catalog Number ③	Catalog Number ③	Catalog Number ③	Catalog Number ③	Catalog Number ③
00	—	—	24V DC	ECT05A1QAA-_	ECT05A2QAA-_	ECT05A4QAA-_	ECT05A8QAA-_	N101BSA_3A
	200/208	1-1/2		ECT05A1EAA-_	ECT05A2EAA-_	ECT05A4EAA-_	ECT05A8EAA-_	
	230/240	1-1/2		ECT05A1BAA-_	ECT05A2BAA-_	ECT05A4BAA-_	ECT05A8BAA-_	
	460/480	2		ECT05A1CAA-_	ECT05A2CAA-_	ECT05A4CAA-_	ECT05A8CAA-_	
	575/600	2		ECT05A1DAA-_	ECT05A2DAA-_	ECT05A4DAA-_	ECT05A8DAA-_	
	380/50 Hz	1-1/2		ECT05A1LAA-_	ECT05A2LAA-_	ECT05A4LAA-_	ECT05A8LAA-_	
0	—	—	24V DC	ECT0501QAA-_	ECT0502QAA-_	ECT0504QAA-_	ECT0508QAA-_	N101BS0_3A
	200/208	3		ECT0501EAA-_	ECT0502EAA-_	ECT0504EAA-_	ECT0508EAA-_	
	230/240	3		ECT0501BAA-_	ECT0502BAA-_	ECT0504BAA-_	ECT0508BAA-_	
	460/480	5		ECT0501CAA-_	ECT0502CAA-_	ECT0504CAA-_	ECT0508CAA-_	
	575/600	5		ECT0501DAA-_	ECT0502DAA-_	ECT0504DAA-_	ECT0508DAA-_	
	380/50 Hz	5		ECT0501LAA-_	ECT0502LAA-_	ECT0504LAA-_	ECT0508LAA-_	
1	—	—	24V DC	ECT0511QAA-_	ECT0512QAA-_	ECT0514QAA-_	ECT0518QAA-_	N101CS1_3A
	200/208	7-1/2		ECT0511EAA-_	ECT0512EAA-_	ECT0514EAA-_	ECT0518EAA-_	
	230/240	7-1/2		ECT0511BAA-_	ECT0512BAA-_	ECT0514BAA-_	ECT0518BAA-_	
	460/480	10		ECT0511CAA-_	ECT0512CAA-_	ECT0514CAA-_	ECT0518CAA-_	
	575/600	10		ECT0511DAA-_	ECT0512DAA-_	ECT0514DAA-_	ECT0518DAA-_	
	380/50 Hz	10		ECT0511LAA-_	ECT0512LAA-_	ECT0514LAA-_	ECT0518LAA-_	
2	—	—	24V DC	ECT0521QAA-K	ECT0522QAA-K	ECT0524QAA-K	ECT0528QAA-K	N101DS2_3A
	200/208	10		ECT0521EAA-K	ECT0522EAA-K	ECT0524EAA-K	ECT0528EAA-K	
	230/240	15		ECT0521BAA-K	ECT0522BAA-K	ECT0524BAA-K	ECT0528BAA-K	
	460/480	25		ECT0521CAA-K	ECT0522CAA-K	ECT0524CAA-K	ECT0528CAA-K	
	575/600	25		ECT0521DAA-K	ECT0522DAA-K	ECT0524DAA-K	ECT0528DAA-K	
	380/50 Hz	25		ECT0521LAA-K	ECT0522LAA-K	ECT0524LAA-K	ECT0528LAA-K	
3	—	—	24V DC	ECT0531QAA-M	ECT0532QAA-M	ECT0534QAA-M	ECT0538QAA-M	N101ES3_3A
	200/208	25		ECT0531EAA-M	ECT0532EAA-M	ECT0534EAA-M	ECT0538EAA-M	
	230/240	30		ECT0531BAA-M	ECT0532BAA-M	ECT0534BAA-M	ECT0538BAA-M	
	460/480	50		ECT0531CAA-M	ECT0532CAA-M	ECT0534CAA-M	ECT0538CAA-M	
	575/600	50		ECT0531DAA-M	ECT0532DAA-M	ECT0534DAA-M	ECT0538DAA-M	
	380/50 Hz	50		ECT0531LAA-M	ECT0532LAA-M	ECT0534LAA-M	ECT0538LAA-M	
4	—	—	24V DC	ECT0541QAA-P	ECT0542QAA-P	ECT0544QAA-P	ECT0548QAA-P	N101ES4_3A
	200/208	40		ECT0541EAA-P	ECT0542EAA-P	ECT0544EAA-P	ECT0548EAA-P	
	230/240	50		ECT0541BAA-P	ECT0542BAA-P	ECT0544BAA-P	ECT0548BAA-P	
	460/480	100		ECT0541CAA-P	ECT0542CAA-P	ECT0544CAA-P	ECT0548CAA-P	
	575/600	100		ECT0541DAA-P	ECT0542DAA-P	ECT0544DAA-P	ECT0548DAA-P	
	380/50 Hz	75		ECT0541LAA-P	ECT0542LAA-P	ECT0544LAA-P	ECT0548LAA-P	
5	—	—	24V DC	ECT0551QAA-S	ECT0552QAA-S	ECT0554QAA-S	ECT0558QAA-S	N101FS5_3A
	200/208	75		ECT0551EAA-S	ECT0552EAA-S	ECT0554EAA-S	ECT0558EAA-S	
	230/240	100		ECT0551BAA-S	ECT0552BAA-S	ECT0554BAA-S	ECT0558BAA-S	
	460/480	200		ECT0551CAA-S	ECT0552CAA-S	ECT0554CAA-S	ECT0558CAA-S	
	575/600	200		ECT0551DAA-S	ECT0552DAA-S	ECT0554DAA-S	ECT0558DAA-S	
	380/50 Hz	150		ECT0551LAA-S	ECT0552LAA-S	ECT0554LAA-S	ECT0558LAA-S	

① All *IT.* Contactors and Starters are furnished with 24V DC coil and control power supply. The eighth digit **Q** denotes separate 24V DC control source.

② The Catalog Numbers listed in the Type 4X column are for Type 4X 304-Grade Stainless Steel, as indicated by the seventh digit **4**. Example: ECT06A**4**QAA. To order Type 4X 316-Grade Stainless Steel, change that digit to **9**. To order Type 4 Painted Steel, change that digit to **3**. To order Non-metallic, change that digit to **5**. For details on these Alternate Enclosures, see **Tab 14**.

③ A "_" denotes Catalog Numbers are incomplete without the Solid-State Overload Range Code. To complete the Catalog Number, select the appropriate Code from **Table 3-2** on **Page 3-2.**

Cover Control ..... **Page 3-3**
Wiring Diagrams ..... **Page 3-17**
Dimensions ..... **Page 15-2**
Accessories ..... **Page 16-2**
Renewal Parts ..... **Page 17-2**
Technical Data ..... **Page 18-2**

Table 3-9. Class ECT06 — Non-combination Reversing Starter

NEMA Size	Motor Voltage	Max. hp	Coil ① Voltage	3-Pole Type 1	3-Pole Type 3R	3-Pole Type 4X ②	3-Pole Type 12	3-Pole Component Starter (Open)
				Catalog Number ③	Catalog Number ③	Catalog Number ③	Catalog Number ③	Catalog Number ③
00	—	—	24V DC	ECT06A1QAA-_	ECT06A2QAA-_	ECT06A4QAA-_	ECT06A8QAA-_	N501BSA_3A
	200/208	1-1/2		ECT06A1EAA-_	ECT06A2EAA-_	ECT06A4EAA-_	ECT06A8EAA-_	
	230/240	1-1/2		ECT06A1BAA-_	ECT06A2BAA-_	ECT06A4BAA-_	ECT06A8BAA-_	
	460/480	2		ECT06A1CAA-_	ECT06A2CAA-_	ECT06A4CAA-_	ECT06A8CAA-_	
	575/600	2		ECT06A1DAA-_	ECT06A2DAA-_	ECT06A4DAA-_	ECT06A8DAA-_	
	380/50 Hz	1-1/2		ECT06A1LAA-_	ECT06A2LAA-_	ECT06A4LAA-_	ECT06A8LAA-_	
0	—	—	24V DC	ECT0601QAA-_	ECT0602QAA-_	ECT0604QAA-_	ECT0608QAA-_	N501BS0_3A
	200/208	3		ECT0601EAA-_	ECT0602EAA-_	ECT0604EAA-_	ECT0608EAA-_	
	230/240	3		ECT0601BAA-_	ECT0602BAA-_	ECT0604BAA-_	ECT0608BAA-_	
	460/480	5		ECT0601CAA-_	ECT0602CAA-_	ECT0604CAA-_	ECT0608CAA-_	
	575/600	5		ECT0601DAA-_	ECT0602DAA-_	ECT0604DAA-_	ECT0608DAA-_	
	380/50 Hz	5		ECT0601LAA-_	ECT0602LAA-_	ECT0604LAA-_	ECT0608LAA-_	
1	—	—	24V DC	ECT0611QAA-_	ECT0612QAA-_	ECT0614QAA-_	ECT0618QAA-_	N501CS1_3A
	200/208	7-1/2		ECT0611EAA-_	ECT0612EAA-_	ECT0614EAA-_	ECT0618EAA-_	
	230/240	7-1/2		ECT0611BAA-_	ECT0612BAA-_	ECT0614BAA-_	ECT0618BAA-_	
	460/480	10		ECT0611CAA-_	ECT0612CAA-_	ECT0614CAA-_	ECT0618CAA-_	
	575/600	10		ECT0611DAA-_	ECT0612DAA-_	ECT0614DAA-_	ECT0618DAA-_	
	380/50 Hz	10		ECT0611LAA-_	ECT0612LAA-_	ECT0614LAA-_	ECT0618LAA-_	
2	—	—	24V DC	ECT0621QAA-K	ECT0622QAA-K	ECT0624QAA-K	ECT0628QAA-K	N501DS2_3A
	200/208	10		ECT0621EAA-K	ECT0622EAA-K	ECT0624EAA-K	ECT0628EAA-K	
	230/240	15		ECT0621BAA-K	ECT0622BAA-K	ECT0624BAA-K	ECT0628BAA-K	
	460/480	25		ECT0621CAA-K	ECT0622CAA-K	ECT0624CAA-K	ECT0628CAA-K	
	575/600	25		ECT0621DAA-K	ECT0622DAA-K	ECT0624DAA-K	ECT0628DAA-K	
	380/50 Hz	25		ECT0621LAA-K	ECT0622LAA-K	ECT0624LAA-K	ECT0628LAA-K	
3	—	—	24V DC	ECT0631QAA-M	ECT0632QAA-M	ECT0634QAA-M	ECT0638QAA-M	N501ES3_3A
	200/208	25		ECT0631EAA-M	ECT0632EAA-M	ECT0634EAA-M	ECT0638EAA-M	
	230/240	30		ECT0631BAA-M	ECT0632BAA-M	ECT0634BAA-M	ECT0638BAA-M	
	460/480	50		ECT0631CAA-M	ECT0632CAA-M	ECT0634CAA-M	ECT0638CAA-M	
	575/600	50		ECT0631DAA-M	ECT0632DAA-M	ECT0634DAA-M	ECT0638DAA-M	
	380/50 Hz	50		ECT0631LAA-M	ECT0632LAA-M	ECT0634LAA-M	ECT0638LAA-M	
4	—	—	24V DC	ECT0641QAA-P	ECT0642QAA-P	ECT0644QAA-P	ECT0648QAA-P	N501ES4_3A
	200/208	40		ECT0641EAA-P	ECT0642EAA-P	ECT0644EAA-P	ECT0648EAA-P	
	230/240	50		ECT0641BAA-P	ECT0642BAA-P	ECT0644BAA-P	ECT0648BAA-P	
	460/480	100		ECT0641CAA-P	ECT0642CAA-P	ECT0644CAA-P	ECT0648CAA-P	
	575/600	100		ECT0641DAA-P	ECT0642DAA-P	ECT0644DAA-P	ECT0648DAA-P	
	380/50 Hz	75		ECT0641LAA-P	ECT0642LAA-P	ECT0644LAA-P	ECT0648LAA-P	
5	—	—	24V DC	ECT0651QAA-S	ECT0652QAA-S	ECT0654QAA-S	ECT0658QAA-S	N501FS5_3A
	200/208	75		ECT0651EAA-S	ECT0652EAA-S	ECT0654EAA-S	ECT0658EAA-S	
	230/240	100		ECT0651BAA-S	ECT0652BAA-S	ECT0654BAA-S	ECT0658BAA-S	
	460/480	200		ECT0651CAA-S	ECT0652CAA-S	ECT0654CAA-S	ECT0658CAA-S	
	575/600	200		ECT0651DAA-S	ECT0652DAA-S	ECT0654DAA-S	ECT0658DAA-S	
	380/50 Hz	150		ECT0651LAA-S	ECT0652LAA-S	ECT0654LAA-S	ECT0658LAA-S	

① All *IT.* Contactors and Starters are furnished with 24V DC coil and control power supply. The eighth digit **Q** denotes separate 24V DC control source.

② The Catalog Numbers listed in the Type 4X column are for Type 4X 304-Grade Stainless Steel, as indicated by the seventh digit **4**. Example: ECT06A**4**QAA. To order Type 4X 316-Grade Stainless Steel, change that digit to **9**. To order Type 4 Painted Steel, change that digit to **3**. To order Non-metallic, change that digit to **5**. For details on these Alternate Enclosures, see **Tab 14**.

③ A "_" denotes Catalog Numbers are incomplete without the Solid-State Overload Range Code. To complete the Catalog Number, select the appropriate Code from the following table:

FLA Range	Size						
	00	0	1	2	3	4	5
.25 – .80	A	A	A	—	—	—	—
.59 – 1.9	B	B	B	—	—	—	—
1.4 – 4.4	C	C	C	—	—	—	—
2.8 – 9.0	D	D	D	—	—	—	—
5.0 – 16	—	—	F	—	—	—	—
6.3 – 20	—	G	—	—	—	—	—
8.4 – 27	—	—	H	—	—	—	—
10 – 32	—	J	—	—	—	—	—
14 – 45	—	—	—	K	—	—	—
16 – 50	—	—	L	—	—	—	—
28 – 90	—	—	—	—	M	—	—
31 – 100	—	—	—	N	—	—	—
42 – 135	—	—	—	—	—	P	—
63 – 200	—	—	—	—	—	R	—
84 – 270	—	—	—	—	—	—	S
131 – 420	—	—	—	—	—	—	T

Cover Control ..... **Page 3-3**
Wiring Diagrams ..... **Page 3-17**
Dimensions ..... **Page 15-2**
Accessories ..... **Page 16-2**
Renewal Parts ..... **Page 17-2**
Technical Data ..... **Page 18-2**

Features

- Full Voltage
- 3-Phase Electromechanical
- Solid-State Overload Relay

Product Selection

Table 3-10. Class ECT16 — Combination Non-reversing Starter — Fusible Disconnect

Motor Voltage	Max. hp	Coil ① Voltage	Disconnect	3-Pole Type 1	3-Pole Type 3R	3-Pole Type 4X ②	3-Pole Type 12	3-Pole Component Starter (Open)
				Catalog Number ③	Catalog Number ③	Catalog Number ③	Catalog Number ③	Catalog Number ③
NEMA Size 0								
—	—	24V DC	30A	ECT1601QAB-_	ECT1602QAB-_	ECT1604QAB-_	ECT1608QAB-_	N101BS0_3A
—	—			ECT1601QAC-_	ECT1602QAC-_	ECT1604QAC-_	ECT1608QAC-_	
200/208	3			ECT1601EAB-_	ECT1602EAB-_	ECT1604EAB-_	ECT1608EAB-_	
230/240	3			ECT1601BAB-_	ECT1602BAB-_	ECT1604BAB-_	ECT1608BAB-_	
460/480	5			ECT1601CAC-_	ECT1602CAC-_	ECT1604CAC-_	ECT1608CAC-_	
575/600	5			ECT1601DAC-_	ECT1602DAC-_	ECT1604DAC-_	ECT1608DAC-_	
380/50 Hz	5			ECT1601LAC-_	ECT1602LAC-_	ECT1604LAC-_	ECT1608LAC-_	
NEMA Size 1								
—	—	24V DC	30A	ECT1611QAB-_	ECT1612QAB-_	ECT1614QAB-_	ECT1618QAB-_	N101CS1_3A
—	—			ECT1611QAC-_	ECT1612QAC-_	ECT1614QAC-_	ECT1618QAC-_	
200/208	7-1/2			ECT1611EAB-_	ECT1612EAB-_	ECT1614EAB-_	ECT1618EAB-_	
230/240	7-1/2			ECT1611BAB-_	ECT1612BAB-_	ECT1614BAB-_	ECT1618BAB-_	
460/480	10			ECT1611CAC-_	ECT1612CAC-_	ECT1614CAC-_	ECT1618CAC-_	
575/600	10			ECT1611DAC-_	ECT1612DAC-_	ECT1614DAC-_	ECT1618DAC-_	
380/50 Hz	10			ECT1611LAC-_	ECT1612LAC-_	ECT1614LAC-_	ECT1618LAC-_	
NEMA Size 2								
—	—	24V DC	60A	ECT1621QAD-K	ECT1622QAD-K	ECT1624QAD-K	ECT1628QAD-K	N101DS2_3A
—	—			ECT1621QAE-K	ECT1622QAE-K	ECT1624QAE-K	ECT1628QAE-K	
200/208	10			ECT1621EAD-K	ECT1622EAD-K	ECT1624EAD-K	ECT1628EAD-K	
230/240	15			ECT1621BAD-K	ECT1622BAD-K	ECT1624BAD-K	ECT1628BAD-K	
460/480	25			ECT1621CAE-K	ECT1622CAE-K	ECT1624CAE-K	ECT1628CAE-K	
575/600	25			ECT1621DAE-K	ECT1622DAE-K	ECT1624DAE-K	ECT1628DAE-K	
380/50 Hz	25			ECT1621LAE-K	ECT1622LAE-K	ECT1624LAE-K	ECT1628LAE-K	
NEMA Size 3								
—	—	24V DC	100A	ECT1631QAF-M	ECT1632QAF-M	ECT1634QAF-M	ECT1638QAF-M	N101ES3_3A
—	—			ECT1631QAG-M	ECT1632QAG-M	ECT1634QAG-M	ECT1638QAG-M	
200/208	25			ECT1631EAF-M	ECT1632EAF-M	ECT1634EAF-M	ECT1638EAF-M	
230/240	30			ECT1631BAF-M	ECT1632BAF-M	ECT1634BAF-M	ECT1638BAF-M	
460/480	50			ECT1631CAG-M	ECT1632CAG-M	ECT1634CAG-M	ECT1638CAG-M	
575/600	50			ECT1631DAG-M	ECT1632DAG-M	ECT1634DAG-M	ECT1638DAG-M	
380/50 Hz	50			ECT1631LAG-M	ECT1632LAG-M	ECT1634LAG-M	ECT1638LAG-M	
NEMA Size 4								
—	—	24V DC	200A	ECT1641QAH-P	ECT1642QAH-P	ECT1644QAH-P	ECT1648QAH-P	N101ES4_3A
—	—			ECT1641QAJ-P	ECT1642QAJ-P	ECT1644QAJ-P	ECT1648QAJ-P	
200/208	40			ECT1641EAH-P	ECT1642EAH-P	ECT1644EAH-P	ECT1648EAH-P	
230/240	50			ECT1641BAH-P	ECT1642BAH-P	ECT1644BAH-P	ECT1648BAH-P	
460/480	100			ECT1641CAJ-P	ECT1642CAJ-P	ECT1644CAJ-P	ECT1648CAJ-P	
575/600	100			ECT1641DAJ-P	ECT1642DAJ-P	ECT1644DAJ-P	ECT1648DAJ-P	
380/50 Hz	75			ECT1641LAJ-P	ECT1642LAJ-P	ECT1644LAJ-P	ECT1648LAJ-P	
NEMA Size 5								
—	—	24V DC	400A	ECT1651QAK-S	ECT1652QAK-S	ECT1654QAK-S	ECT1658QAK-S	N101FS5_3A
—	—			ECT1651QAL-S	ECT1652QAL-S	ECT1654QAL-S	ECT1658QAL-S	
200/208	75			ECT1651EAK-S	ECT1652EAK-S	ECT1654EAK-S	ECT1658EAK-S	
230/240	100			ECT1651BAK-S	ECT1652BAK-S	ECT1654BAK-S	ECT1658BAK-S	
460/480	200			ECT1651CAL-S	ECT1652CAL-S	ECT1654CAL-S	ECT1658CAL-S	
575/600	200			ECT1651DAL-S	ECT1652DAL-S	ECT1654DAL-S	ECT1658DAL-S	
380/50 Hz	150			ECT1651LAL-S	ECT1652LAL-S	ECT1654LAL-S	ECT1658LAL-S	

① All *IT.* Contactors and Starters are furnished with 24V DC coil and control power supply. The eighth digit **Q** denotes separate 24V DC control source.
② The Catalog Numbers listed in the Type 4X column are for Type 4X 304-Grade Stainless Steel, as indicated by the seventh digit **4**. Example: ECT1604QAB. To order Type 4X 316-Grade Stainless Steel, change that digit to **9**. To order Type 4 Painted Steel, change that digit to **3**. To order Non-metallic, change that digit to **5**. For details on these Alternate Enclosures, see **Tab 14**.
③ A "_" denotes Catalog Numbers are incomplete without the Solid-State Overload Range Code. To complete the Catalog Number, select the appropriate Code from **Table 3-2** on **Page 3-2**.

Cover Control ..... **Page 3-3**
Wiring Diagrams ..... **Page 3-17**
Dimensions ..... **Page 15-2**
Accessories ..... **Page 16-2**
Renewal Parts ..... **Page 17-2**
Technical Data ..... **Page 18-2**

Table 3-11. Class ECT16 — Combination Non-reversing Starter — Non-fusible Disconnect

Motor Voltage	Max. hp	Coil ① Voltage	Disconnect	3-Pole Type 1	3-Pole Type 3R	3-Pole Type 4X ②	3-Pole Type 12	3-Pole Component Starter (Open)
				Catalog Number ③	Catalog Number ③	Catalog Number ③	Catalog Number ③	Catalog Number ③
NEMA Size 0								
—	—	24V DC	30A	ECT1601QAA-_	ECT1602QAA-_	ECT1604QAA-_	ECT1608QAA-_	N101BS0_3A
200/208	3			ECT1601EAA-_	ECT1602EAA-_	ECT1604EAA-_	ECT1608EAA-_	
230/240	3			ECT1601BAA-_	ECT1602BAA-_	ECT1604BAA-_	ECT1608BAA-_	
460/480	5			ECT1601CAA-_	ECT1602CAA-_	ECT1604CAA-_	ECT1608CAA-_	
575/600	5			ECT1601DAA-_	ECT1602DAA-_	ECT1604DAA-_	ECT1608DAA-_	
380/50 Hz	5			ECT1601LAA-_	ECT1602LAA-_	ECT1604LAA-_	ECT1608LAA-_	
NEMA Size 1								
—	—	24V DC	30A	ECT1611QAA-_	ECT1612QAA-_	ECT1614QAA-_	ECT1618QAA-_	N101CS1_3A
200/208	7-1/2			ECT1611EAA-_	ECT1612EAA-_	ECT1614EAA-_	ECT1618EAA-_	
230/240	7-1/2			ECT1611BAA-_	ECT1612BAA-_	ECT1614BAA-_	ECT1618BAA-_	
460/480	10			ECT1611CAA-_	ECT1612CAA-_	ECT1614CAA-_	ECT1618CAA-_	
575/600	10			ECT1611DAA-_	ECT1612DAA-_	ECT1614DAA-_	ECT1618DAA-_	
380/50 Hz	10			ECT1611LAA-_	ECT1612LAA-_	ECT1614LAA-_	ECT1618LAA-_	
NEMA Size 2								
—	—	24V DC	60A	ECT1621QAA-K	ECT1622QAA-K	ECT1624QAA-K	ECT1628QAA-K	N101DS2_3A
200/208	10			ECT1621EAA-K	ECT1622EAA-K	ECT1624EAA-K	ECT1628EAA-K	
230/240	15			ECT1621BAA-K	ECT1622BAA-K	ECT1624BAA-K	ECT1628BAA-K	
460/480	25			ECT1621CAA-K	ECT1622CAA-K	ECT1624CAA-K	ECT1628CAA-K	
575/600	25			ECT1621DAA-K	ECT1622DAA-K	ECT1624DAA-K	ECT1628DAA-K	
380/50 Hz	25			ECT1621LAA-K	ECT1622LAA-K	ECT1624LAA-K	ECT1628LAA-K	
NEMA Size 3								
—	—	24V DC	100A	ECT1631QAA-M	ECT1632QAA-M	ECT1634QAA-M	ECT1638QAA-M	N101ES3_3A
200/208	25			ECT1631EAA-M	ECT1632EAA-M	ECT1634EAA-M	ECT1638EAA-M	
230/240	30			ECT1631BAA-M	ECT1632BAA-M	ECT1634BAA-M	ECT1638BAA-M	
460/480	50			ECT1631CAA-M	ECT1632CAA-M	ECT1634CAA-M	ECT1638CAA-M	
575/600	50			ECT1631DAA-M	ECT1632DAA-M	ECT1634DAA-M	ECT1638DAA-M	
380/50 Hz	50			ECT1631LAA-M	ECT1632LAA-M	ECT1634LAA-M	ECT1638LAA-M	
NEMA Size 4								
—	—	24V DC	200A	ECT1641QAA-P	ECT1642QAA-P	ECT1644QAA-P	ECT1648QAA-P	N101ES4_3A
200/208	40			ECT1641EAA-P	ECT1642EAA-P	ECT1644EAA-P	ECT1648EAA-P	
230/240	50			ECT1641BAA-P	ECT1642BAA-P	ECT1644BAA-P	ECT1648BAA-P	
460/480	100			ECT1641CAA-P	ECT1642CAA-P	ECT1644CAA-P	ECT1648CAA-P	
575/600	100			ECT1641DAA-P	ECT1642DAA-P	ECT1644DAA-P	ECT1648DAA-P	
380/50 Hz	75			ECT1641LAA-P	ECT1642LAA-P	ECT1644LAA-P	ECT1648LAA-P	
NEMA Size 5								
—	—	24V DC	400A	ECT1651QAA-S	ECT1652QAA-S	ECT1654QAA-S	ECT1658QAA-S	N101FS5_3A
200/208	75			ECT1651EAA-S	ECT1652EAA-S	ECT1654EAA-S	ECT1658EAA-S	
230/240	100			ECT1651BAA-S	ECT1652BAA-S	ECT1654BAA-S	ECT1658BAA-S	
460/480	200			ECT1651CAA-S	ECT1652CAA-S	ECT1654CAA-S	ECT1658CAA-S	
575/600	200			ECT1651DAA-S	ECT1652DAA-S	ECT1654DAA-S	ECT1658DAA-S	
380/50 Hz	150			ECT1651LAA-S	ECT1652LAA-S	ECT1654LAA-S	ECT1658LAA-S	

① All *IT.* Contactors and Starters are furnished with 24V DC coil and control power supply. The eighth digit **Q** denotes separate 24V DC control source.
② The Catalog Numbers listed in the Type 4X column are for Type 4X 304-Grade Stainless Steel, as indicated by the seventh digit **4**. Example: ECT1604QAA. To order Type 4X 316-Grade Stainless Steel, change that digit to **9**. To order Type 4 Painted Steel, change that digit to **3**. To order Non-metallic, change that digit to **5**. For details on these Alternate Enclosures, see **Tab 14**.
③ A "_" denotes Catalog Numbers are incomplete without the Solid-State Overload Range Code. To complete the Catalog Number, select the appropriate Code from the following table:

FLA Range	Size						
	00	0	1	2	3	4	5
.25 – .80	A	A	A	—	—	—	—
.59 – 1.9	B	B	B	—	—	—	—
1.4 – 4.4	C	C	C	—	—	—	—
2.8 – 9.0	D	D	D	—	—	—	—
5.0 – 16	—	—	F	—	—	—	—
6.3 – 20	—	G	—	—	—	—	—
8.4 – 27	—	—	H	—	—	—	—
10 – 32	—	J	—	—	—	—	—
14 – 45	—	—	—	K	—	—	—
16 – 50	—	—	L	—	—	—	—
28 – 90	—	—	—	—	M	—	—
31 – 100	—	—	—	N	—	—	—
42 – 135	—	—	—	—	—	P	—
63 – 200	—	—	—	—	—	R	—
84 – 270	—	—	—	—	—	—	S
131 – 420	—	—	—	—	—	—	T

Cover Control ..... **Page 3-3**
Wiring Diagrams ..... **Page 3-17**
Dimensions ..... **Page 15-2**
Accessories ..... **Page 16-2**
Renewal Parts ..... **Page 17-2**
Technical Data ..... **Page 18-2**

Table 3-12. Class ECT17 — Combination Reversing Starter — Fusible Disconnect

Motor Voltage	Max. hp	Coil ① Voltage	Disconnect	3-Pole Type 1	3-Pole Type 3R	3-Pole Type 4X ②	3-Pole Type 12	3-Pole Component Starter (Open)
				Catalog Number ③	Catalog Number ③	Catalog Number ③	Catalog Number ③	Catalog Number ③
NEMA Size 0								
—	—	24V DC	30A	ECT1701QAB-_	ECT1702QAB-_	ECT1704QAB-_	ECT1708QAB-_	N501BS0_3A
—	—			ECT1701QAC-_	ECT1702QAC-_	ECT1704QAC-_	ECT1708QAC-_	
200/208	3			ECT1701EAB-_	ECT1702EAB-_	ECT1704EAB-_	ECT1708EAB-_	
230/240	3			ECT1701BAB-_	ECT1702BAB-_	ECT1704BAB-_	ECT1708BAB-_	
460/480	5			ECT1701CAC-_	ECT1702CAC-_	ECT1704CAC-_	ECT1708CAC-_	
575/600	5			ECT1701DAC-_	ECT1702DAC-_	ECT1704DAC-_	ECT1708DAC-_	
380/50 Hz	5			ECT1701LAC-_	ECT1702LAC-_	ECT1704LAC-_	ECT1708LAC-_	
NEMA Size 1								
—	—	24V DC	30A	ECT1711QAB-_	ECT1712QAB-_	ECT1714QAB-_	ECT1718QAB-_	N501CS1_3A
—	—			ECT1711QAC-_	ECT1712QAC-_	ECT1714QAC-_	ECT1718QAC-_	
200/208	7-1/2			ECT1711EAB-_	ECT1712EAB-_	ECT1714EAB-_	ECT1718EAB-_	
230/240	7-1/2			ECT1711BAB-_	ECT1712BAB-_	ECT1714BAB-_	ECT1718BAB-_	
460/480	10			ECT1711CAC-_	ECT1712CAC-_	ECT1714CAC-_	ECT1718CAC-_	
575/600	10			ECT1711DAC-_	ECT1712DAC-_	ECT1714DAC-_	ECT1718DAC-_	
380/50 Hz	10			ECT1711LAC-_	ECT1712LAC-_	ECT1714LAC-_	ECT1718LAC-_	
NEMA Size 2								
—	—	24V DC	60A	ECT1721QAD-K	ECT1722QAD-K	ECT1724QAD-K	ECT1728QAD-K	N501DS2_3A
—	—			ECT1721QAE-K	ECT1722QAE-K	ECT1724QAE-K	ECT1728QAE-K	
200/208	10			ECT1721EAD-K	ECT1722EAD-K	ECT1724EAD-K	ECT1728EAD-K	
230/240	15			ECT1721BAD-K	ECT1722BAD-K	ECT1724BAD-K	ECT1728BAD-K	
460/480	25			ECT1721CAE-K	ECT1722CAE-K	ECT1724CAE-K	ECT1728CAE-K	
575/600	25			ECT1721DAE-K	ECT1722DAE-K	ECT1724DAE-K	ECT1728DAE-K	
380/50 Hz	25			ECT1721LAE-K	ECT1722LAEK	ECT1724LAE-K	ECT1728LAE-K	
NEMA Size 3								
—	—	24V DC	100A	ECT1731QAF-M	ECT1732QAF-M	ECT1734QAF-M	ECT1738QAF-M	N501ES3_3A
—	—			ECT1731QAG-M	ECT1732QAG-M	ECT1734QAG-M	ECT1738QAG-M	
200/208	25			ECT1731EAF-M	ECT1732EAF-M	ECT1734EAF-M	ECT1738EAF-M	
230/240	30			ECT1731BAF-M	ECT1732BAF-M	ECT1734BAF-M	ECT1738BAF-M	
460/480	50			ECT1731CAG-M	ECT1732CAG-M	ECT1734CAG-M	ECT1738CAG-M	
575/600	50			ECT1731DAG-M	ECT1732DAG-M	ECT1734DAG-M	ECT1738DAG-M	
380/50 Hz	50			ECT1731LAG-M	ECT1732LAG-M	ECT1734LAG-M	ECT1738LAG-M	
NEMA Size 4								
—	—	24V DC	200A	ECT1741QAH-P	ECT1742QAH-P	ECT1744QAH-P	ECT1748QAH-P	N501ES4_3A
—	—			ECT1741QAJ-P	ECT1742QAJ-P	ECT1744QAJ-P	ECT1748QAJ-P	
200/208	40			ECT1741EAH-P	ECT1742EAH-P	ECT1744EAH-P	ECT1748EAH-P	
230/240	50			ECT1741BAH-P	ECT1742BAH-P	ECT1744BAH-P	ECT1748BAH-P	
460/480	100			ECT1741CAJ-P	ECT1742CAJ-P	ECT1744CAJ-P	ECT1748CAJ-P	
575/600	100			ECT1741DAJ-P	ECT1742DAJ-P	ECT1744DAJ-P	ECT1748DAJ-P	
380/50 Hz	75			ECT1741LAJ-P	ECT1742LAJ-P	ECT1744LAJ-P	ECT1748LAJ-P	
NEMA Size 5								
—	—	24V DC	400A	ECT1751QAK-S	ECT1752QAK-S	ECT1754QAK-S	ECT1758QAK-S	N501FS5_3A
—	—			ECT1751QAL-S	ECT1752QAL-S	ECT1754QAL-S	ECT1758QAL-S	
200/208	75			ECT1751EAK-S	ECT1752EAK-S	ECT1754EAK-S	ECT1758EAK-S	
230/240	100			ECT1751BAK-S	ECT1752BAK-S	ECT1754BAK-S	ECT1758BAK-S	
460/480	200			ECT1751CAL-S	ECT1752CAL-S	ECT1754CAL-S	ECT1758CAL-S	
575/600	200			ECT1751DAL-S	ECT1752DAL-S	ECT1754DAL-S	ECT1758DAL-S	
380/50 Hz	150			ECT1751LAL-S	ECT1752LAL-S	ECT1754LAL-S	ECT1758LAL-S	

① All *IT.* Contactors and Starters are furnished with 24V DC coil and control power supply. The eighth digit **Q** denotes separate 24V DC control source.

② The Catalog Numbers listed in the Type 4X column are for Type 4X 304-Grade Stainless Steel, as indicated by the seventh digit **4**. Example: ECT170**4**QAB. To order Type 4X 316-Grade Stainless Steel, change that digit to **9**. To order Type 4 Painted Steel, change that digit to **3**. To order Non-metallic, change that digit to **5**. For details on these Alternate Enclosures, see **Tab 14**.

③ A "_" denotes Catalog Numbers are incomplete without the Solid-State Overload Range Code. To complete the Catalog Number, select the appropriate Code from **Table 3-2** on **Page 3-2**.

Cover Control ..... **Page 3-3**
Wiring Diagrams ..... **Page 3-17**
Dimensions ..... **Page 15-2**
Accessories ..... **Page 16-2**
Renewal Parts ..... **Page 17-2**
Technical Data ..... **Page 18-2**

Table 3-13. Class ECT17 — Combination Reversing Starter — Non-fusible Disconnect

Motor Voltage	Max. hp	Coil ① Voltage	Disconnect	3-Pole Type 1	3-Pole Type 3R	3-Pole Type 4X ②	3-Pole Type 12	3-Pole Component Starter (Open)
				Catalog Number ③	Catalog Number ③	Catalog Number ③	Catalog Number ③	Catalog Number ③
NEMA Size 0								
—	—	24V DC	30A	ECT1701QAA-_	ECT1702QAA-_	ECT1704QAA-_	ECT1708QAA-_	N501BS0_3A
200/208	3			ECT1701EAA-_	ECT1702EAA-_	ECT1704EAA-_	ECT1708EAA-_	
230/240	3			ECT1701BAA-_	ECT1702BAA-_	ECT1704BAA-_	ECT1708BAA-_	
460/480	5			ECT1701CAA-_	ECT1702CAA-_	ECT1704CAA-_	ECT1708CAA-_	
575/600	5			ECT1701DAA-_	ECT1702DAA-_	ECT1704DAA-_	ECT1708DAA-_	
380/50 Hz	5			ECT1701LAA-_	ECT1702LAA-_	ECT1704LAA-_	ECT1708LAA-_	
NEMA Size 1								
—	—	24V DC	30A	ECT1711QAA-_	ECT1712QAA-_	ECT1714QAA-_	ECT1718QAA-_	N501CS1_3A
200/208	7-1/2			ECT1711EAA-_	ECT1712EAA-_	ECT1714EAA-_	ECT1718EAA-_	
230/240	7-1/2			ECT1711BAA-_	ECT1712BAA-_	ECT1714BAA-_	ECT1718BAA-_	
460/480	10			ECT1711CAA-_	ECT1712CAA-_	ECT1714CAA-_	ECT1718CAA-_	
575/600	10			ECT1711DAA-_	ECT1712DAA-_	ECT1714DAA-_	ECT1718DAA-_	
380/50 Hz	10			ECT1711LAA-_	ECT1712LAA-_	ECT1714LAA-_	ECT1718LAA-_	
NEMA Size 2								
—	—	24V DC	60A	ECT1721QAA-K	ECT1722QAA-K	ECT1724QAA-K	ECT1728QAA-K	N501DS2_3A
200/208	10			ECT1721EAA-K	ECT1722EAA-K	ECT1724EAA-K	ECT1728EAA-K	
230/240	15			ECT1721BAA-K	ECT1722BAA-K	ECT1724BAA-K	ECT1728BAA-K	
460/480	25			ECT1721CAA-K	ECT1722CAA-K	ECT1724CAA-K	ECT1728CAA-K	
575/600	25			ECT1721DAA-K	ECT1722DAA-K	ECT1724DAA-K	ECT1728DAA-K	
380/50 Hz	25			ECT1721LAA-K	ECT1722LAA-K	ECT1724LAA-K	ECT1728LAA-K	
NEMA Size 3								
—	—	24V DC	100A	ECT1731QAA-M	ECT1732QAA-M	ECT1734QAA-M	ECT1738QAA-M	N501ES3_3A
200/208	25			ECT1731EAA-M	ECT1732EAA-M	ECT1734EAA-M	ECT1738EAA-M	
230/240	30			ECT1731BAA-M	ECT1732BAA-M	ECT1734BAA-M	ECT1738BAA-M	
460/480	50			ECT1731CAA-M	ECT1732CAA-M	ECT1734CAA-M	ECT1738CAA-M	
575/600	50			ECT1731DAA-M	ECT1732DAA-M	ECT1734DAA-M	ECT1738DAA-M	
380/50 Hz	50			ECT1731LAA-M	ECT1732LAA-M	ECT1734LAA-M	ECT1738LAA-M	
NEMA Size 4								
—	—	24V DC	200A	ECT1741QAA-P	ECT1742QAA-P	ECT1744QAA-P	ECT1748QAA-P	N501ES4_3A
200/208	40			ECT1741EAA-P	ECT1742EAA-P	ECT1744EAA-P	ECT1748EAA-P	
230/240	50			ECT1741BAA-P	ECT1742BAA-P	ECT1744BAA-P	ECT1748BAA-P	
460/480	100			ECT1741CAA-P	ECT1742CAA-P	ECT1744CAA-P	ECT1748CAA-P	
575/600	100			ECT1741DAA-P	ECT1742DAA-P	ECT1744DAA-P	ECT1748DAA-P	
380/50 Hz	75			ECT1741LAA-P	ECT1742LAA-P	ECT1744LAA-P	ECT1748LAA-P	
NEMA Size 5								
—	—	24V DC	400A	ECT1751QAA-S	ECT1752QAA-S	ECT1754QAA-S	ECT1758QAA-S	N501FS5_3A
200/208	75			ECT1751EAA-S	ECT1752EAA-S	ECT1754EAA-S	ECT1758EAA-S	
230/240	100			ECT1751BAA-S	ECT1752BAA-S	ECT1754BAA-S	ECT1758BAA-S	
460/480	200			ECT1751CAA-S	ECT1752CAA-S	ECT1754CAA-S	ECT1758CAA-S	
575/600	200			ECT1751DAA-S	ECT1752DAA-S	ECT1754DAA-S	ECT1758DAA-S	
380/50 Hz	150			ECT1751LAA-S	ECT1752LAA-S	ECT1754LAA-S	ECT1758LAA-S	

① All *IT.* Contactors and Starters are furnished with 24V DC coil and control power supply. The eighth digit **Q** denotes separate 24V DC control source.

② The Catalog Numbers listed in the Type 4X column are for Type 4X 304-Grade Stainless Steel, as indicated by the seventh digit **4**. Example: ECT170**4**QAA. To order Type 4X 316-Grade Stainless Steel, change that digit to **9**. To order Type 4 Painted Steel, change that digit to **3**. To order Non-metallic, change that digit to **5**. For details on these Alternate Enclosures, see **Tab 14**.

③ A "_" denotes Catalog Numbers are incomplete without the Solid-State Overload Range Code. To complete the Catalog Number, select the appropriate Code from the following table:

FLA Range	Size						
	00	0	1	2	3	4	5
.25 – .80	A	A	A	—	—	—	—
.59 – 1.9	B	B	B	—	—	—	—
1.4 – 4.4	C	C	C	—	—	—	—
2.8 – 9.0	D	D	D	—	—	—	—
5.0 – 16	—	—	F	—	—	—	—
6.3 – 20	—	G	—	—	—	—	—
8.4 – 27	—	—	H	—	—	—	—
10 – 32	—	J	—	—	—	—	—
14 – 45	—	—	—	K	—	—	—
16 – 50	—	—	L	—	—	—	—
28 – 90	—	—	—	—	M	—	—
31 – 100	—	—	—	N	—	—	—
42 – 135	—	—	—	—	—	P	—
63 – 200	—	—	—	—	—	R	—
84 – 270	—	—	—	—	—	—	S
131 – 420	—	—	—	—	—	—	T

Cover Control ..... **Page 3-3**
Wiring Diagrams ..... **Page 3-17**
Dimensions ..... **Page 15-2**
Accessories ..... **Page 16-2**
Renewal Parts ..... **Page 17-2**
Technical Data ..... **Page 18-2**

Features

- Full Voltage
- 3-Phase Electromechanical
- Solid-State Overload Relay
- Integrated Cover Control (Type 1/12)

Type 12 Combination IT. Starter with HMCPE

Product Selection

Table 3-14. Class ECT22 — Combination Non-reversing Starter — Circuit Breaker

Motor Voltage	Max. hp	Magnet Coil Voltage ①	Circuit Breaker Type	3-Pole Type 1 General Purpose Catalog Number ③	3-Pole Type 3R Rainproof Catalog Number ③	3-Pole Type 4X ② Watertight Catalog Number ③	3-Pole Type 12 Dust-Tight Catalog Number ③	3-Pole Component Starter (Open) Catalog Number ③
NEMA Size 0								
200	1 3	24V DC	HMCPE 7A HMCPE 15A	**ECT2201EAC-_** **ECT2201EAD-_**	**ECT2202EAC-_** **ECT2202EAD-_**	**ECT2204EAC-_** **ECT2204EAD-_**	**ECT2208EAC-_** **ECT2208EAD-_**	**N101BS0_3A**
230	1 3	24V DC	HMCPE 7A HMCPE 15A	**ECT2201BAC-_** **ECT2201BAD-_**	**ECT2202BAC-_** **ECT2202BAD-_**	**ECT2204BAC-_** **ECT2204BAD-_**	**ECT2208BAC-_** **ECT2208BAD-_**	**N101BS0_3A**
460	1 3 5	24V DC	HMCPE 3A HMCPE 7A HMCPE 15A	**ECT2201CAB-_** **ECT2201CAC-_** **ECT2201CAD-_**	**ECT2202CAB-_** **ECT2202CAC-_** **ECT2202CAD-_**	**ECT2204CAB-_** **ECT2204CAC-_** **ECT2204CAD-_**	**ECT2208CAB-_** **ECT2208CAC-_** **ECT2208CAD-_**	**N101BS0_3A**
575	1 3 5	24V DC	HMCPE 3A HMCPE 7A HMCPE 15A	**ECT2201DAB-_** **ECT2201DAC-_** **ECT2201DAD-_**	**ECT2202DAB-_** **ECT2202DAC-_** **ECT2202DAD-_**	**ECT2204DAB-_** **ECT2204DAC-_** **ECT2204DAD-_**	**ECT2208DAB-_** **ECT2208DAC-_** **ECT2208DAD-_**	**N101BS0_3A**
NEMA Size 1								
200	1 3 5 7-1/2	24V DC	HMCPE 7A HMCPE 15A HMCPE 30A HMCPE 50A	**ECT2211EAC-_** **ECT2211EAD-_** **ECT2211EAE-_** **ECT2211EAF-_**	**ECT2212EAC-_** **ECT2212EAD-_** **ECT2212EAE-_** **ECT2212EAF-_**	**ECT2214EAC-_** **ECT2214EAD-_** **ECT2214EAE-_** **ECT2214EAF-_**	**ECT2218EAC-_** **ECT2218EAD-_** **ECT2218EAE-_** **ECT2218EAF-_**	**N101CS1_3A**
230	1 3 5 7-1/2	24V DC	HMCPE 7A HMCPE 15A HMCPE 30A HMCPE 50A	**ECT2211BAC-_** **ECT2211BAD-_** **ECT2211BAE-_** **ECT2211BAF-_**	**ECT2212BAC-_** **ECT2212BAD-_** **ECT2212BAE-_** **ECT2212BAF-_**	**ECT2214BAC-_** **ECT2214BAD-_** **ECT2214BAE-_** **ECT2214BAF-_**	**ECT2218BAC-_** **ECT2218BAD-_** **ECT2218BAE-_** **ECT2218BAF-_**	**N101CS1_3A**
460	1 3 5 10	24V DC	HMCPE 3A HMCPE 7A HMCPE 15A HMCPE 30A	**ECT2211CAB-_** **ECT2211CAC-_** **ECT2211CAD-_** **ECT2211CAE-_**	**ECT2212CAB-_** **ECT2212CAC-_** **ECT2212CAD-_** **ECT2212CAE-_**	**ECT2214CAB-_** **ECT2214CAC-_** **ECT2214CAD-_** **ECT2214CAE-_**	**ECT2218CAB-_** **ECT2218CAC-_** **ECT2218CAD-_** **ECT2218CAE-_**	**N101CS1_3A**
575	1 3 5 10	24V DC	HMCPE 3A HMCPE 7A HMCPE 15A HMCPE 30A	**ECT2211DAB-_** **ECT2211DAC-_** **ECT2211DAD-_** **ECT2211DAE-_**	**ECT2212DAB-_** **ECT2212DAC-_** **ECT2212DAD-_** **ECT2212DAE-_**	**ECT2214DAB-_** **ECT2214DAC-_** **ECT2214DAD-_** **ECT2214DAE-_**	**ECT2218DAB-_** **ECT2218DAC-_** **ECT2218DAD-_** **ECT2218DAE-_**	**N101CS1_3A**

① All *IT.* Contactors and Starters are furnished with 24V DC coil and control power supply. The eighth digit **Q** denotes separate 24V DC control source.

② The Catalog Numbers listed in the Type 4X column are for Type 4X 304-Grade Stainless Steel, as indicated by the seventh digit **4**. Example: ECT2204QAB. To order Type 4X 316-Grade Stainless Steel, change that digit to **9**. To order Type 4 Painted Steel, change that digit to **3**. To order Non-metallic, change that digit to **5**. For details on these Alternate Enclosures, see **Tab 14**.

③ A "_" denotes Catalog Numbers are incomplete without the Solid-State Overload Range Code. To complete the Catalog Number, select the appropriate Code from the following table:

FLA Range	Size 00	0	1	2	3	4	5
.25 – .80	**A**	**A**	**A**	—	—	—	—
.59 – 1.9	**B**	**B**	**B**	—	—	—	—
1.4 – 4.4	**C**	**C**	**C**	—	—	—	—
2.8 – 9.0	**D**	**D**	**D**	—	—	—	—
5.0 – 16	—	—	**F**	—	—	—	—
6.3 – 20	—	**G**	—	—	—	—	—
8.4 – 27	—	—	**H**	—	—	—	—
10 – 32	—	**J**	—	—	—	—	—
14 – 45	—	—	—	**K**	—	—	—
16 – 50	—	—	**L**	—	—	—	—
28 – 90	—	—	—	—	**M**	—	—
31 – 100	—	—	—	**N**	—	—	—
42 – 135	—	—	—	—	—	**P**	—
63 – 200	—	—	—	—	—	**R**	—
84 – 270	—	—	—	—	—	—	**S**
131 – 420	—	—	—	—	—	—	**T**

Cover Control ..... **Page 3-3**
Wiring Diagrams ..... **Page 3-17**
Dimensions ..... **Page 15-2**
Accessories ..... **Page 16-2**
Renewal Parts ..... **Page 17-2**
Technical Data ..... **Page 18-2**

Tables 3-14 Class ECT22 — Combination Non-reversing Starter — Circuit Breaker (Continued)

Motor Voltage	Max. hp	Magnet Coil Voltage ①	Circuit Breaker Type	3-Pole Type 1 General Purpose Catalog Number ③	3-Pole Type 3R Rainproof Catalog Number ③	3-Pole Type 4X ② Watertight Catalog Number ③	3-Pole Type 12 Dust-Tight Catalog Number ③	3-Pole Component Starter (Open) Catalog Number ③
NEMA Size 2								
200	10	24V DC	HMCPE 50A	**ECT2221EAF-K**	**ECT2222EAF-K**	**ECT2224EAF-K**	**ECT2228EAF-K**	**N101DS2_3A**
230	10 15	24V DC	HMCPE 50A HMCPE 70A	**ECT2221BAF-K** **ECT2221BAW-K**	**ECT2222BAF-K** **ECT2222BAW-K**	**ECT2224BAF-K** **ECT2224BAW-K**	**ECT2228BAF-K** **ECT2228BAW-K**	**N101DS2_3A**
460	25	24V DC	HMCPE 50A	**ECT2221CAF-K**	**ECT2222CAF-K**	**ECT2224CAF-K**	**ECT2228CAF-K**	**N101DS2_3A**
575	15 25	24V DC	HMCPE 30A HMCPE 50A	**ECT2221DAE-K** **ECT2221DAF-K**	**ECT2222DAE-K** **ECT2222DAF-K**	**ECT2224DAE-K** **ECT2224DAF-K**	**ECT2228DAE-K** **ECT2228DAF-K**	**N101DS2_3A**
NEMA Size 3								
200	20 25	24V DC	HMCPE 100A HMCPE 100A	**ECT2231EAG-M** **ECT2231EAX-M**	**ECT2232EAG-M** **ECT2232EAX-M**	**ECT2234EAG-M** **ECT2234EAX-M**	**ECT2238EAG-M** **ECT2238EAX-M**	**N101ES3_3A**
230	25 30	24V DC	HMCPE 100A HMCPE 100A	**ECT2231BAG-M** **ECT2231BAX-M**	**ECT2232BAG-M** **ECT2232BAX-M**	**ECT2234BAG-M** **ECT2234BAX-M**	**ECT2238BAG-M** **ECT2238BAX-M**	**N101ES3_3A**
460	50	24V DC	HMCPE 100A	**ECT2231CAG-M**	**ECT2232CAG-M**	**ECT2234CAG-M**	**ECT2238CAG-M**	**N101ES3_3A**
575	30 50	24V DC	HMCPE 50A HMCPE 100A	**ECT2231DAF-M** **ECT2231DAG-M**	**ECT2232DAF-M** **ECT2232DAG-M**	**ECT2234DAF-M** **ECT2234DAG-M**	**ECT2238DAF-M** **ECT2238DAG-M**	**N101ES3_3A**
NEMA Size 4								
200	40	24V DC	HMCP 150A	**ECT2241EAH-P**	**ECT2242EAH-P**	**ECT2244EAH-P**	**ECT2248EAH-P**	**N101ES4_3A**
230	50	24V DC	HMCP 150A	**ECT2241BAH-P**	**ECT2242BAH-P**	**ECT2244BAH-P**	**ECT2248BAH-P**	**N101ES4_3A**
460	100	24V DC	HMCP 150A	**ECT2241CAH-P**	**ECT2242CAH-P**	**ECT2244CAH-P**	**ECT2248CAH-P**	**N101ES4_3A**
575	100	24V DC	HMCP 150A	**ECT2241DAH-P**	**ECT2242DAH-P**	**ECT2244DAH-P**	**ECT2248DAH-P**	**N101ES4_3A**
NEMA Size 5								
200	50 75	24V DC	HMCP 250A HMCP 400A	**ECT2251EAJ-S** **ECT2251EAK-S**	**ECT2252EAJ-S** **ECT2252EAK-S**	**ECT2254EAJ-S** **ECT2254EAK-S**	**ECT2258EAJ-S** **ECT2258EAK-S**	**N101FS5_3A**
230	60 100	24V DC	HMCP 250A HMCP 400A	**ECT2251BAJ-S** **ECT2251BAK-S**	**ECT2252BAJ-S** **ECT2252BAK-S**	**ECT2254BAJ-S** **ECT2254BAK-S**	**ECT2258BAJ-S** **ECT2258BAK-S**	**N101FS5_3A**
460	125 200	24V DC	HMCP 250A HMCP 400A	**ECT2251CAJ-S** **ECT2251CAK-S**	**ECT2252CAJ-S** **ECT2252CAK-S**	**ECT2254CAJ-S** **ECT2254CAK-S**	**ECT2258CAJ-S** **ECT2258CAK-S**	**N101FS5_3A**
575	150 200	24V DC	HMCP 250A HMCP 400A	**ECT2251DAJ-S** **ECT2251DAK-S**	**ECT2252DAJ-S** **ECT2252DAK-S**	**ECT2254DAJ-S** **ECT2254DAK-S**	**ECT2258DAJ-S** **ECT2258DAK-S**	**N101FS5_3A**

① All *IT.* Contactors and Starters are furnished with 24V DC coil and control power supply. The eighth digit **Q** denotes separate 24V DC control source.

② The Catalog Numbers listed in the Type 4X column are for Type 4X 304-Grade Stainless Steel, as indicated by the seventh digit **4**. Example: ECT2224QAB. To order Type 4X 316-Grade Stainless Steel, change that digit to **9**. To order Type 4 Painted Steel, change that digit to **3**. To order Non-metallic, change that digit to **5**. For details on these Alternate Enclosures, see **Tab 14**.

③ A "_" denotes Catalog Numbers are incomplete without the Solid-State Overload Range Code. To complete the Catalog Number, select the appropriate Code from the following table:

FLA Range	Size 00	0	1	2	3	4	5
.25 – .80	**A**	**A**	**A**	—	—	—	—
.59 – 1.9	**B**	**B**	**B**	—	—	—	—
1.4 – 4.4	**C**	**C**	**C**	—	—	—	—
2.8 – 9.0	**D**	**D**	**D**	—	—	—	—
5.0 – 16	—	—	**F**	—	—	—	—
6.3 – 20	—	**G**	—	—	—	—	—
8.4 – 27	—	—	**H**	—	—	—	—
10 – 32	—	**J**	—	—	—	—	—
14 – 45	—	—	—	**K**	—	—	—
16 – 50	—	—	**L**	—	—	—	—
28 – 90	—	—	—	—	**M**	—	—
31 – 100	—	—	—	**N**	—	—	—
42 – 135	—	—	—	—	—	**P**	—
63 – 200	—	—	—	—	—	**R**	—
84 – 270	—	—	—	—	—	—	**S**
131 – 420	—	—	—	—	—	—	**T**

Cover Control ..... **Page 3-3**
Wiring Diagrams ..... **Page 3-17**
Dimensions ..... **Page 15-2**
Accessories ..... **Page 16-2**
Renewal Parts ..... **Page 17-2**
Technical Data ..... **Page 18-2**

Table 3-15. Class ECT23 — Combination Reversing Starter — Circuit Breaker

Motor Voltage	Max. hp	Magnet Coil Voltage ①	Circuit Breaker Type	3-Pole Type 1 General Purpose Catalog Number ③	3-Pole Type 3R Rainproof Catalog Number ③	3-Pole Type 4X ② Watertight Catalog Number ③	3-Pole Type 12 Dust-Tight Catalog Number ③	3-Pole Component Starter (Open) Catalog Number ③
NEMA Size 0								
200	1 3	24V DC	HMCPE 7A HMCPE 15A	ECT2301EAC-_ ECT2301EAD-_	ECT2302EAC-_ ECT2302EAD-_	ECT2304EAC-_ ECT2304EAD-_	ECT2308EAC-_ ECT2308EAD-_	N501BS0_3A
230	1 3	24V DC	HMCPE 7A HMCPE 15A	ECT2301BAC-_ ECT2301BAD-_	ECT2302BAC-_ ECT2302BAD-_	ECT2304BAC-_ ECT2304BAD-_	ECT2308BAC-_ ECT2308BAD-_	N501BS0_3A
460	1 3 5	24V DC	HMCPE 3A HMCPE 7A HMCPE 15A	ECT2301CAB-_ ECT2301CAC-_ ECT2301CAD-_	ECT2302CAB-_ ECT2302CAC-_ ECT2302CAD-_	ECT2304CAB-_ ECT2304CAC-_ ECT2304CAD-_	ECT2308CAB-_ ECT2308CAC-_ ECT2308CAD-_	N501BS0_3A
575	1 3 5	24V DC	HMCPE 3A HMCPE 7A HMCPE 15A	ECT2301DAB-_ ECT2301DAC-_ ECT2301DAD-_	ECT2302DAB-_ ECT2302DAC-_ ECT2302DAD-_	ECT2304DAB-_ ECT2304DAC-_ ECT2304DAD-_	ECT2308DAB-_ ECT2308DAC-_ ECT2308DAD-_	N501BS0_3A
NEMA Size 1								
200	1 3 5 7-1/2	24V DC	HMCPE 7A HMCPE 15A HMCPE 30A HMCPE 50A	ECT2311EAC-_ ECT2311EAD-_ ECT2311EAE-_ ECT2311EAF-_	ECT2312EAC-_ ECT2312EAD-_ ECT2312EAE-_ ECT2312EAF-_	ECT2314EAC-_ ECT2314EAD-_ ECT2314EAE-_ ECT2314EAF-_	ECT2318EAC-_ ECT2318EAD-_ ECT2318EAE-_ ECT2318EAF-_	N501CS1_3A
230	1 3 5 7-1/2	24V DC	HMCPE 7A HMCPE 15A HMCPE 30A HMCPE 50A	ECT2311BAC-_ ECT2311BAD-_ ECT2311BAE-_ ECT2311BAF-_	ECT2312BAC-_ ECT2312BAD-_ ECT2312BAE-_ ECT2312BAF-_	ECT2314BAC-_ ECT2314BAD-_ ECT2314BAE-_ ECT2314BAF-_	ECT2318BAC-_ ECT2318BAD-_ ECT2318BAE-_ ECT2318BAF-_	N501CS1_3A
460	1 3 5 10	24V DC	HMCPE 3A HMCPE 7A HMCPE 15A HMCPE 30A	ECT2311CAB-_ ECT2311CAC-_ ECT2311CAD-_ ECT2311CAE-_	ECT2312CAB-_ ECT2312CAC-_ ECT2312CAD-_ ECT2312CAE-_	ECT2314CAB-_ ECT2314CAC-_ ECT2314CAD-_ ECT2314CAE-_	ECT2318CAB-_ ECT2318CAC-_ ECT2318CAD-_ ECT2318CAE-_	N501CS1_3A
575	1 3 5 10	24V DC	HMCPE 3A HMCPE 7A HMCPE 15A HMCPE 30A	ECT2311DAB-_ ECT2311DAC-_ ECT2311DAD-_ ECT2311DAE-_	ECT2312DAB-_ ECT2312DAC-_ ECT2312DAD-_ ECT2312DAE-_	ECT2314DAB-_ ECT2314DAC-_ ECT2314DAD-_ ECT2314DAE-_	ECT2318DAB-_ ECT2318DAC-_ ECT2318DAD-_ ECT2318DAE-_	N501CS1_3A
NEMA Size 2								
200	10	24V DC	HMCPE 50A	ECT2321EAF-K	ECT2322EAF-K	ECT2324EAF-K	ECT2328EAF-K	N501DS2_3A
230	10 15	24V DC	HMCPE 50A HMCPE 70A	ECT2321BAF-K ECT2321BAW-K	ECT2322BAF-K ECT2322BAW-K	ECT2324BAF-K ECT2324BAW-K	ECT2328BAF-K ECT2328BAW-K	N501DS2_3A
460	25	24V DC	HMCPE 50A	ECT2321CAF-K	ECT2322CAF-K	ECT2324CAF-K	ECT2328CAF-K	N501DS2_3A
575	15 25	24V DC	HMCPE 30A HMCPE 50A	ECT2321DAE-K ECT2321DAF-K	ECT2322DAE-K ECT2322DAF-K	ECT2324DAE-K ECT2324DAF-K	ECT2328DAE-K ECT2328DAF-K	N501DS2_3A

① All *IT.* Contactors and Starters are furnished with 24V DC coil and control power supply. The eighth digit **Q** denotes separate 24V DC control source.

② The Catalog Numbers listed in the Type 4X column are for Type 4X 304-Grade Stainless Steel, as indicated by the seventh digit **4**. Example: ECT2304EAC. To order Type 4X 316-Grade Stainless Steel, change that digit to **9**. To order Type 4 Painted Steel, change that digit to **3**. To order Nonmetallic, change that digit to **5**. For details on these Alternate Enclosures, see **Tab 14**.

③ A "_" denotes Catalog Numbers are incomplete without the Solid-State Overload Range Code. To complete the Catalog Number, select the appropriate Code from the following table:

FLA Range	Size 00	0	1	2	3	4	5
.25 – .80	A	A	A	—	—	—	—
.59 – 1.9	B	B	B	—	—	—	—
1.4 – 4.4	C	C	C	—	—	—	—
2.8 – 9.0	D	D	D	—	—	—	—
5.0 – 16	—	—	F	—	—	—	—
6.3 – 20	—	G	—	—	—	—	—
8.4 – 27	—	—	H	—	—	—	—
10 – 32	—	J	—	—	—	—	—
14 – 45	—	—	—	K	—	—	—
16 – 50	—	—	L	—	—	—	—
28 – 90	—	—	—	—	M	—	—
31 – 100	—	—	—	N	—	—	—
42 – 135	—	—	—	—	—	P	—
63 – 200	—	—	—	—	—	R	—
84 – 270	—	—	—	—	—	—	S
131 – 420	—	—	—	—	—	—	T

Cover Control ..... Page 3-3
Wiring Diagrams ..... Page 3-17
Dimensions ..... Page 15-2
Accessories ..... Page 16-2
Renewal Parts ..... Page 17-2
Technical Data ..... Page 18-2

Table 3-15 Class ECT23 — Combination Reversing Starter — Circuit Breaker (Continued)

Motor Voltage	Max. hp	Magnet Coil Voltage ①	Circuit Breaker Type	3-Pole Type 1 General Purpose Catalog Number ③	3-Pole Type 3R Rainproof Catalog Number ③	3-Pole Type 4X ② Watertight Catalog Number ③	3-Pole Type 12 Dust-Tight Catalog Number ③	3-Pole Component Starter (Open) Catalog Number ③
NEMA Size 3								
200	20 25	24V DC	HMCPE 100A HMCPE 100A	ECT2331EAG-M ECT2331EAX-M	ECT2332EAG-M ECT2332EAX-M	ECT2334EAG-M ECT2334EAX-M	ECT2338EAG-M ECT2338EAX-M	N501ES3_3A
230	25 30	24V DC	HMCPE 100A HMCPE 100A	ECT2331BAG-M ECT2331BAX-M	ECT2332BAG-M ECT2332BAX-M	ECT2334BAG-M ECT2334BAX-M	ECT2338BAG-M ECT2338BAX-M	N501ES3_3A
460	50	24V DC	HMCPE 100A	ECT2331CAG-M	ECT2332CAG-M	ECT2334CAG-M	ECT2338CAG-M	N501ES3_3A
575	30 50	24V DC	HMCPE 50A HMCPE 100A	ECT2331DAF-M ECT2331DAG-M	ECT2332DAF-M ECT2332DAG-M	ECT2334DAF-M ECT2334DAG-M	ECT2338DAF-M ECT2338DAG-M	N501ES3_3A
NEMA Size 4								
200	40	24V DC	HMCP 150A	ECT2341EAH-P	ECT2342EAH-P	ECT2344EAH-P	ECT2348EAH-P	N501ES4_3A
230	50	24V DC	HMCP 150A	ECT2341BAH-P	ECT2342BAH-P	ECT2344BAH-P	ECT2348BAH-P	N501ES4_3A
460	100	24V DC	HMCP 150A	ECT2341CAH-P	ECT2342CAH-P	ECT2344CAH-P	ECT2348CAH-P	N501ES4_3A
575	100	24V DC	HMCP 150A	ECT2341DAH-P	ECT2342DAH-P	ECT2344DAH-P	ECT2348DAH-P	N501ES4_3A
NEMA Size 5								
200	50 75	24V DC	HMCP 250A HMCP 400A	ECT2351EAJ-S ECT2351EAK-S	ECT2352EAJ-S ECT2352EAK-S	ECT2354EAJ-S ECT2354EAK-S	ECT2358EAJ-S ECT2358EAK-S	N501FS5_3A
230	60 100	24V DC	HMCP 250A HMCP 400A	ECT2351BAJ-S ECT2351BAK-S	ECT2352BAJ-S ECT2352BAK-S	ECT2354BAJ-S ECT2354BAK-S	ECT2358BAJ-S ECT2358BAK-S	N501FS5_3A
460	125 200	24V DC	HMCP 250A HMCP 400A	ECT2351CAJ-S ECT2351CAK-S	ECT2352CAJ-S ECT2352CAK-S	ECT2354CAJ-S ECT2354CAK-S	ECT2358CAJ-S ECT2358CAK-S	N501FS5_3A
575	150 200	24V DC	HMCP 250A HMCP 400A	ECT2351DAJ-S ECT2351DAK-S	ECT2352DAJ-S ECT2352DAK-S	ECT2354DAJ-S ECT2354DAK-S	ECT2358DAJ-S ECT2358DAK-S	N501FS5_3A

① All *IT.* Contactors and Starters are furnished with 24V DC coil and control power supply. The eighth digit **Q** denotes separate 24V DC control source.

② The Catalog Numbers listed in the Type 4X column are for Type 4X 304-Grade Stainless Steel, as indicated by the seventh digit **4**. Example: ECT2304EAC. To order Type 4X 316-Grade Stainless Steel, change that digit to **9**. To order Type 4 Painted Steel, change that digit to **3**. To order Nonmetallic, change that digit to **5**. For details on these Alternate Enclosures, see **Tab 14**.

③ A "_" denotes Catalog Numbers are incomplete without the Solid-State Overload Range Code. To complete the Catalog Number, select the appropriate Code from the following table:

FLA Range	Size 00	0	1	2	3	4	5
.25 – .80	A	A	A	—	—	—	—
.59 – 1.9	B	B	B	—	—	—	—
1.4 – 4.4	C	C	C	—	—	—	—
2.8 – 9.0	D	D	D	—	—	—	—
5.0 – 16	—	—	F	—	—	—	—
6.3 – 20	—	G	—	—	—	—	—
8.4 – 27	—	—	H	—	—	—	—
10 – 32	—	J	—	—	—	—	—
14 – 45	—	—	—	K	—	—	—
16 – 50	—	—	L	—	—	—	—
28 – 90	—	—	—	—	M	—	—
31 – 100	—	—	—	N	—	—	—
42 – 135	—	—	—	—	—	P	—
63 – 200	—	—	—	—	—	R	—
84 – 270	—	—	—	—	—	—	S
131 – 420	—	—	—	—	—	—	T

Cover Control ..... Page 3-3
Wiring Diagrams ..... Page 3-17
Dimensions ..... Page 15-2
Accessories ..... Page 16-2
Renewal Parts ..... Page 17-2
Technical Data ..... Page 18-2

Wiring Diagrams

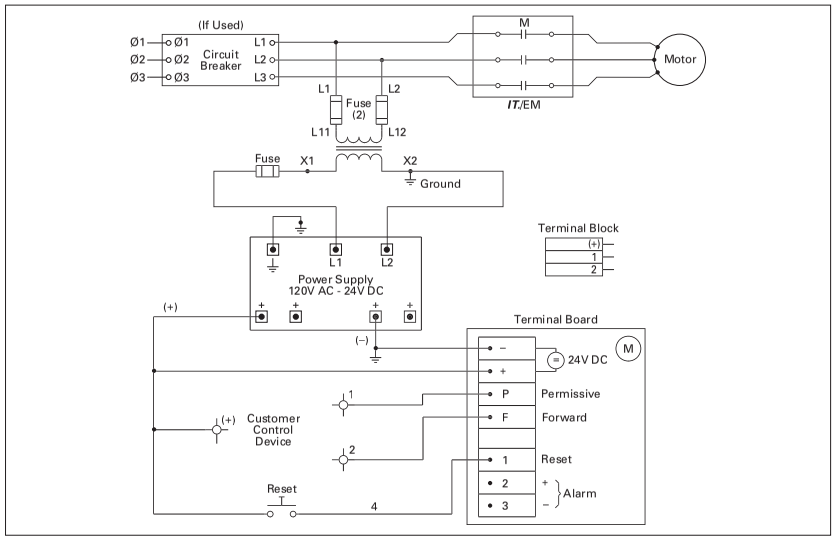

Figure 3-1. *IT.* Combination Starter with CPT and Power Supply

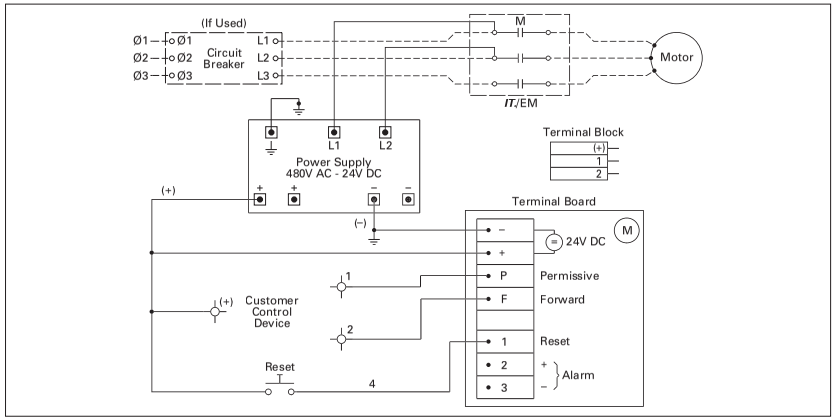

Figure 3-2. *IT.* Combination Starter with Power Supply

Catalog Number ECN2208AAC

Product Description

Eaton's Cutler-Hammer® "Freedom Series" Starters and Contactors feature a compact, space-saving design, high strength, impact and temperature resistant insulating materials.

Features

- Adjustable Bimetallic Ambient Compensated Overload Relays with interchangeable heater packs — available in three basic sizes, covering applications up to 900 hp — reducing the number of different contactor/overload relay combinations that have to be stocked.
- Fixed heater overloads optional.
- Electronic/Solid-State Overload optional.
- A full line of snap-on accessories — top and side mounted auxiliary contacts, solid-state and pneumatic timers, etc.
- Straight-through wiring — line lugs at top, load lugs at bottom.
- Horizontal or vertical mounting on upright panel for application freedom.
- Screw type power terminals have captive, backed-out self-lifting pressure plates with ± screws — reduced wiring time.
- Accessible terminals for easy wiring. Optional fingerproof shields available to prevent electrical shock.
- Top located coil terminals convenient and readily accessible. 45 mm contactor magnet coils have three terminals, permitting either top or diagonal wiring — easy to replace European or U.S. style starters or contactors without changing wiring layout.
- Encapsulated dual voltage/frequency magnet coils — permanently marked with voltage, frequency and part number.
- Designed to meet or exceed UL, CSA, IEC, VDE, BS and other international standards and listings.

Standards and Certifications

Note: See **Page 18-2** for additional information on Standards and Certifications that apply to all Cutler-Hammer Enclosed Control products.

- UL Listed
- cUL Listed (indicates appropriate CSA Standard investigation)
- ABS Type Approved

Certified Type 2 Coordination

Eaton's Cutler-Hammer Freedom Series IEC starters and NEMA starters are UL Certified to achieve IEC 947 Type 2 coordination against 100,000A short circuit fault currents. Any brand of properly selected fuse can be used. Type 2 coordination means that the starter will be suitable for further use following a short circuit fault.

ISO 9001 Certification

When you turn to Eaton's Cutler-Hammer Products, you turn to quality. The International Standards Organization (ISO) has established a series of standards acknowledged by 91 industrialized nations to bring harmony to the international quest for quality. The ISO certification process covers 20 quality system elements in design, production and installation that must conform to achieve registration. The Enclosed Control is manufactured in our Fayetteville, NC plant, and this facility is registered ISO 9001. This commitment to quality results in increased product reliability and total customer satisfaction.

Freedom NEMA contactors and starters are extremely rugged products built for any application. Their long electrical/mechanical life is extended through easy maintainability.

- Meets and exceeds all UL and CSA standards.
- Sized based on standard NEMA size classifications.
- Designed and built for a variety of demanding applications.
- Easy coil change and inspectable/replaceable contacts.
- Available Open and in Type 1, 3R, 4, 4X, 7/9 and 12 enclosures.

Short Circuit Protection

Fuses and **Inverse-Time Circuit Breakers** may be selected per Article 430, Part D of the National Electrical Code to protect motor branch circuits from fault conditions. If higher ratings or settings are required to start the motor, do **not** exceed the maximum as listed in Exception No. 2, Article 430-52.

Catalog Number Selection

Table 3-16. NEMA Freedom Line Enclosed Control Catalog Numbering System

E C N 22 2 1 A A F - __

Design

N = Freedom NEMA
2 = A200

Class		Table
01 =	Non-reversing Contactor — 3-Pole	**3-22**
	Non-reversing Contactor — 2-Pole	**3-23**
	Non-reversing Contactor — 4-Pole	**3-24**
	Non-reversing Contactor — 5-Pole	**3-25**
02 =	Reversing Contactor — 3-Pole	**3-26**
05 =	Non-combination Non-reversing Starter	**3-27**
06 =	Non-combination Reversing Starter	**3-28**
07 =	Non-combination Non-reversing Starter with CPT	**3-29**
08 =	Non-combination Single-Phase Non-reversing Starter	**3-30**
16 =	Combination Non-reversing Starter — Fusible Disconnect	**3-31, 3-42**
	Combination Non-reversing Starter — Non-fusible Disconnect	**3-32**
	Special Enclosure Combination Non-reversing Starter — Fusible/Non-fusible Disconnect	**3-33**
17 =	Combination Reversing Starter — Fusible Disconnect	**3-34**
	Combination Reversing Starter — Non-fusible Disconnect	**3-35**
18 =	Combination Reversing Starter — Fusible Disconnect with CPT	**3-36, 3-43**
	Combination Reversing Starter — Non-fusible Disconnect with CPT	**3-37**
22 =	Combination Non-reversing Starter — Circuit Breaker	**3-38,**
	Special Enclosure Combination Non-reversing Starter — Circuit Breaker	**3-39**
23 =	Combination Reversing Starter — Circuit Breaker	**3-40**
24 =	Combination Non-reversing Starter — Circuit Breaker with CPT	**3-41, 3-43**

NEMA Size

A = Size 00	**3** = Size 3	**7** = Size 7
0 = Size 0	**4** = Size 4	**8** = Size 8
1 = Size 1	**5** = Size 5	**9** = Size 9
2 = Size 2	**6** = Size 6	

Cover Control

Type 1 Non-comb., **Table 3-19**
All Others, **Table 3-20**
E22 Style Comb., **Table 3-22**

Contactors

3 = 3 Poles

Coil Voltage and/or Control Transformers

See **Tables 3-17** and **3-18**

Disconnect Fuse Clip Ratings

A = None	**G** = 100A/600V R	**N** = 600A/600V R
B = 30A/250V R	**H** = 200A/250V R	**P** = 800A/600V L
C = 30A/600V R	**J** = 200A/600V R	**Q** = 1200A/600V L
D = 60A/250V R	**K** = 400A/250V R	**R** = 1600A/600V L
E = 60A/600V R	**L** = 400A/600V R	**S** = 2000A/600V L
F = 100A/250V R	**M** = 600A/250V R	**T** = by Description

HMCP/E or Breaker Ratings

A = None	**H** = 150A	**R** = 3000A
B = 3A	**J** = 250A	**T** = by Description
C = 7A	**K** = 400A	**5** = 3A ①
D = 15A	**L** = 600A	**6** = 7A ①
E = 30A	**M** = 800A	**7** = 15A ①
F = 50A	**N** = 1000A	**8** = 30A ①
W = 70A	**P** = 1200A	**9** = 50A ①
G = 100A	**Q** = 2000A	**I** = 100A ①

Modification Codes

See **Page 16-40**

Enclosure Type

1 = Type 1 — General Purpose
2 = Type 3R — Rainproof
3 = Type 4 — Watertight (Painted Steel)
4 = Type 4X — Watertight (304-Grade Stainless Steel)
5 = Type 4X — Corrosion (Nonmetallic)
6 = Type 7/9 — Bolted Hazardous Location
7 = Type 7/9 — Threaded Hazardous Location
8 = Type 12 — Dust-Tight
9 = Type 4X — 316-Grade Stainless Steel

① Use for Sizes 0 – 3, HMCP 600V applications only.

Table 3-17. Magnetic Coil Codes (System Voltage) ②

Code	Magnet Coil	Code	Magnet Coil	Code	Magnet Coil
A	120/60 110/50	**K**	240/50	**U**	24/50
B	240/60 220/50	**L**	380/50	**V**	32/50
C	460/60 440/50	**M**	415/50	**W**	48/60
D	575/60 550/50	**P**	12V DC	**X**	104 – 120/60
E	208/60	**Q**	24V DC	**Y**	48/50
G	550/50	**R**	48V DC	**Z**	By Description
H	277/60	**S**	125V DC		
J	208 – 240/60	**T**	24/60		

② When control power transformer modification codes (**C1** – **C11**) are used or when starter class includes CPT (i.e. ECN07, 18) see **Table 3-18** for system voltage code.

Table 3-18. Control Power Transformer Codes (System Voltage)

Code	Primary	Secondary
B	240/480 – 220/440 Wired for 240V	120/60 – 110/50
C	240/480 – 220/440 Wired for 480V	120/60 – 110/50
D	600/60 – 550/50	120/60 – 110/50
E	208/60	120/60
H	277/60	120/60
L	380/50	110/50
M	415/50	110/50
Q	208/60	24
R	240/480 – 220/440 Wired for 240V	24
S	240/480 – 220/440 Wired for 480V	24
T	600/60	24
U	277/60	24
V	380/50	24
W	415/50	24
X	240/480/600 Wired for 480V	120
Y	240/480/600 Wired for 480V	24
Z	By Description	

Cover Control

Non-combination Starters

Control Power Transformer (CPT) may be required.

Combination Starters

- Cover control for Combination Starters uses 10250T style devices as standard.
- E22 style cover control options are available (**Table 3-21**).
- Selector switches are maintained with lever operators.
- Pushbuttons are momentary type with extended pushbutton.
- The kit includes hardware and connecting wires (where possible).
- For factory installed control devices other than shown below, refer to Modification Codes, **Page 16-40**.

Type 1 Cover Control

Table 3-19. Type 1 Non-combination Cover Control

Description	Factory Installed Flange Control ①	Field Installation Kits
	Position 9 Code	Catalog Number
Non-reversing		
No Cover Mounted Pilot Devices	A	C400GK0
START/STOP Pushbuttons	B	C400GK1
with Red RUN Pilot Light	C	C400GK12 ②
with Red RUN/Green OFF Lights	D	C400GK16 ②
HAND/OFF/AUTO Selector Switch	H	C400GK3
with Red RUN Pilot Light	J	C400GK32 ②
with Red RUN/Green OFF Lights	K	C400GK36 ②
Red RUN Pilot Light	P	C400GK42 ②
Green OFF	Q	C400GK41 ②
Red RUN/Green OFF Pilot Lights	R	C400GK46 ②
Reversing		
No Cover Mounted Pilot Devices	A	C400GK0
FOR/REV/STOP Pushbuttons	B	C400GR1
with 2 Red Pilot Lights	C	C400GR14 ②
UP/STOP/DOWN Pushbuttons	E	C400GR2
with 2 Red Pilot Lights	F	C400GR24 ②
Two Red Pilot Lights	P	C400GK44 ②
One Green Pilot Light	Q	C400GK41 ②

① For more available factory installed flange control, see **Table 3-20**.

② Add Code Letter from the table below to Catalog Number for voltage — Kits only. Example: C400T9**B**.

Rating	Code Letter	Rating	Code Letter	Rating	Code Letter
120V 60 Hz	A	277V 60 Hz	H	480V 60 Hz	C
208V 60 Hz	E	380V 50 Hz	L	600V 60 Hz	D
240V 60 Hz	B				

10250T Selector Switch

Table 3-20. Type 1 Combination and All Type 3R, 4X and 12 Cover Control ③

Description	Factory Installed Flange Control	Field Installation Kits
	Position 9 Code	Catalog Number
Non-reversing		
No Cover Mounted Pilot Devices	A	—
START/STOP Pushbuttons	B	C400T1
with Red RUN Pilot Light	C	—
with Red RUN/Green OFF Lights	D	—
ON/OFF Pushbuttons	E	C400T2
with Red RUN Pilot Light	F	—
with Red RUN/Green OFF Lights	G	—
HAND/OFF/AUTO Selector Switch	H	C400T12
with Red RUN Pilot Light	J	—
with Red RUN/Green OFF Lights	K	—
START Pushbutton	L	C400T3
ON Pushbutton	M	C400T4
OFF Pushbutton	N	C400T5
Red RUN Pilot Light	P	C400T9 ④
Green OFF	Q	C400T10 ④
Red RUN/Green OFF Pilot Lights	R	C400T11 ④
START/STOP Selector Switch	S	C400T13
with Red RUN Pilot Light	T	—
with Red RUN/Green OFF Lights	U	—
ON/OFF Selector Switch	V	C400T14
with Red RUN Pilot Light	W	—
with Red RUN/Green OFF Lights	X	—
Reversing		
No Cover Mounted Pilot Devices	A	—
FOR/REV/STOP Pushbuttons	B	C400T6
with 2 Red Pilot Lights	C	—
with 2 Red/1 Green Pilot Lights	D	—
UP/STOP/DOWN Pushbuttons	E	—
with 2 Red Pilot Lights	F	—
FOR/OFF/REV Selector Switch	H	C400T15
with 2 Red Pilot Lights	J	—
with 2 Red/1 Green Pilot Lights	K	—
Two Red Pilot Lights	P	⑤
One Green Pilot Light	Q	C400T10 ④
Two Red/One Green Pilot Lights	R	—
OPEN/OFF/CLOSE Selector Switch	V	C400T16
with 2 Red Pilot Lights	W	—
with 2 Red/1 Green Pilot Lights	X	—

③ For Type 1 Non-combination field installation kits, see **Table 3-19**.

④ Add Code Letter from the table below to Catalog Number for voltage — Kits only. Example: C400T9**B**.

Rating	Code Letter	Rating	Code Letter	Rating	Code Letter
120V 60 Hz	A	277V 60 Hz	H	480V 60 Hz	C
208V 60 Hz	E	380V 50 Hz	L	600V 60 Hz	D
240V 60 Hz	B				

⑤ Order Quantity (2) of **C400T10**.

E22 Selector Switch

Table 3-21. Type 1, 3R, 4X and 12 E22 Style Combination Starter Cover Control

Description	Factory Installed ①	Field Installation Kits
	Position 9 Cover Control Code	Combination Only
		Catalog Number
Non-reversing		
No Cover Mounted Pilot Devices	A	—
START/STOP Pushbuttons (PB)	B	CE400T01
START/STOP PB & Red RUN Light	C	CE400T02 ②
START/STOP PB, Red RUN, & Green STOPPED Light	D	CE400T03 ②
HAND/OFF/AUTO Selector Switch (SS)	H	CE400T04
H-O-A SS & Red RUN Light	J	CE400T05 ②
H-O-A SS, Red RUN, & Green STOPPED Light	K	CE400T06 ②
Red RUN Pilot Light	P	CE400T10 ②
Green Off Pilot Light	Q	CE400T11 ②
Red RUN/Green OFF Pilot Light	R	CE400T12 ②
ON/OFF Selector Switch (SS)	S	CE400T07
ON/OFF SS, Red RUN Light	T	CE400T08 ②
ON/OFF SS, Red RUN, & Green STOPPED Light	U	CE400T09 ②
Reversing		
No Cover Mounted Pilot Devices	A	—
FWD/REV/STOP Pushbuttons (PB)	B	CE400T50
FWD/REV/STOP PB + Red FWD & REV Lights	C	CE400T51 ②
FWD/REV/STOP PB, Red FWD/REV, & Green STOPPED	D	CE400T52 ②
FOR/OFF/REV Selector Switch (SS)	H	CE400T53
FOR/OFF/REV SS + Red FWD & REV Lights	J	CE400T54 ②
FOR/OFF/REV SS, Red FWD/REV, & Green STOPPED	K	CE400T55 ②
OPEN/OFF/CLOSE Selector Switch (SS)	V	CE400T56
OPEN/OFF/CLOSE SS + Red FWD & REV Lights	W	CE400T57 ②
OPEN/OFF/CLOSE SS, Red FWD/REV, & Green STOPPED	X	CE400T58 ②

① To include any of the above cover controls, place the control code character in position 9 of your Catalog Number and add Mod Code **C29**.
Example: ECN16A4A**D**A-**C29**.
Full voltage non-reversing fusible starter with START/STOP pushbutton with red RUN and green OFF pilot lights.

② Suffix for lights (required for field installed kits only) in the table below:

Rating	Code Letter	Rating	Code Letter	Rating	Code Letter
120V 60 Hz	A	277V 60 Hz	H	480V 60 Hz	C
208V 60 Hz	E	380V 50 Hz	L	600V 60 Hz	D
240V 60 Hz	B				

Features

- 1-Phase or 3-Phase Magnetic
- 2-, 3-, 4- or 5-Pole Non-reversing or 3-Pole Reversing
- 600V Maximum

Product Selection

Table 3-22. Class ECN01 — Non-reversing Contactor — 3-Pole

NEMA Size	Continuous Ampere Rating	Motor Voltage	Maximum hp Rating ①	Magnet Coil Voltage	Type 1 General Purpose Catalog Number	Type 3R Rainproof Catalog Number	Type 4X Watertight & Dust-Tight Stainless Steel ③ Catalog Number	Type 12 Dust-Tight Industrial Catalog Number	Component Contactor (Open) Catalog Number
00	9	—	—	120	ECN01A1A3A	ECN01A2A3A	(Select Contactor from Size 0 Listing)		CN15AN3AB
		200	1-1/2	208	ECN01A1E3A	ECN01A2E3A			CN15AN3EB
		230	1-1/2	240	ECN01A1B3A	ECN01A2B3A			CN15AN3BB
		460	2	480	ECN01A1C3A	ECN01A2C3A			CN15AN3CB
		575	2	600	ECN01A1D3A	ECN01A2D3A			CN15AN3DB
0	18	—	—	120	ECN0101A3A	ECN0102A3A	ECN0104A3A	ECN0108A3A	CN15BN3AB
		200	3	208	ECN0101E3A	ECN0102E3A	ECN0104E3A	ECN0108E3A	CN15BN3EB
		230	3	240	ECN0101B3A	ECN0102B3A	ECN0104B3A	ECN0108B3A	CN15BN3BB
		460	5	480	ECN0101C3A	ECN0102C3A	ECN0104C3A	ECN0108C3A	CN15BN3CB
		575	5	600	ECN0101D3A	ECN0102D3A	ECN0104D3A	ECN0108D3A	CN15BN3DB
1	27	—	—	120	ECN0111A3A	ECN0112A3A	ECN0114A3A	ECN0118A3A	CN15DN3AB
		200	7-1/2	208	ECN0111E3A	ECN0112E3A	ECN0114E3A	ECN0118E3A	CN15DN3EB
		230	7-1/2	240	ECN0111B3A	ECN0112B3A	ECN0114B3A	ECN0118B3A	CN15DN3BB
		460	10	480	ECN0111C3A	ECN0112C3A	ECN0114C3A	ECN0118C3A	CN15DN3CB
		575	10	600	ECN0111D3A	ECN0112D3A	ECN0114D3A	ECN0118D3A	CN15DN3DB
2	45	—	—	120	ECN0121A3A	ECN0122A3A	ECN0124A3A	ECN0128A3A	CN15GN3AB
		200	10	208	ECN0121E3A	ECN0122E3A	ECN0124E3A	ECN0128E3A	CN15GN3EB
		230	15	240	ECN0121B3A	ECN0122B3A	ECN0124B3A	ECN0128B3A	CN15GN3BB
		460	25	480	ECN0121C3A	ECN0122C3A	ECN0124C3A	ECN0128C3A	CN15GN3CB
		575	25	600	ECN0121D3A	ECN0122D3A	ECN0124D3A	ECN0128D3A	CN15GN3DB
3	90	—	—	120	ECN0131A3A	ECN0132A3A	ECN0134A3A	ECN0138A3A	CN15KN3A
		200	25	208	ECN0131E3A	ECN0132E3A	ECN0134E3A	ECN0138E3A	CN15KN3E
		230	30	240	ECN0131B3A	ECN0132B3A	ECN0134B3A	ECN0138B3A	CN15KN3B
		460	50	480	ECN0131C3A	ECN0132C3A	ECN0134C3A	ECN0138C3A	CN15KN3C
		575	50	600	ECN0131D3A	ECN0132D3A	ECN0134D3A	ECN0138D3A	CN15KN3D
4	135	—	—	120	ECN0141A3A	ECN0142A3A	ECN0144A3A	ECN0148A3A	CN15NN3A
		200	40	208	ECN0141E3A	ECN0142E3A	ECN0144E3A	ECN0148E3A	CN15NN3E
		230	50	240	ECN0141B3A	ECN0142B3A	ECN0144B3A	ECN0148B3A	CN15NN3B
		460	100	480	ECN0141C3A	ECN0142C3A	ECN0144C3A	ECN0148C3A	CN15NN3C
		575	100	600	ECN0141D3A	ECN0142D3A	ECN0144D3A	ECN0148D3A	CN15NN3D
5	270	—	—	120	ECN0151A3A	ECN0152A3A	ECN0154A3A	ECN0158A3A	CN15SN3A
		200	75	208	ECN0151E3A	ECN0152E3A	ECN0154E3A	ECN0158E3A	CN15SN3E
		230	100	240	ECN0151B3A	ECN0152B3A	ECN0154B3A	ECN0158B3A	CN15SN3B
		460	200	480	ECN0151C3A	ECN0152C3A	ECN0154C3A	ECN0158C3A	CN15SN3C
		575	200	600	ECN0151D3A	ECN0152D3A	ECN0154D3A	ECN0158D3A	CN15SN3D
6	540	—	—	120	ECN0161A3A	ECN0162A3A	ECN0164A3A	ECN0168A3A	CN15TN3A
		200	150	208	ECN0161E3A	ECN0162E3A	ECN0164E3A	ECN0168E3A	CN15TN3E
		230	200	240	ECN0161B3A	ECN0162B3A	ECN0164B3A	ECN0168B3A	CN15TN3B
		460	400	480	ECN0161C3A	ECN0162C3A	ECN0164C3A	ECN0168C3A	CN15TN3C
		575	400	600	ECN0161D3A	ECN0162D3A	ECN0164D3A	ECN0168D3A	CN15TN3D
7	810	—	—	120	ECN0171A3A	ECN0172A3A	ECN0173A3A ②	ECN0178A3A	CN15UN3A
		230	300	240	ECN0171B3A	ECN0172B3A	ECN0173B3A ②	ECN0178B3A	CN15UN3B
		460	600	480	ECN0171C3A	ECN0172C3A	ECN0173C3A ②	ECN0178C3A	CN15UN3C
		575	600	600	ECN0171D3A	ECN0172D3A	ECN0173D3A ②	ECN0178D3A	CN15UN3D
8	1215	—	—	120	ECN0181A3A	ECN0182A3A	ECN0183A3A ②	ECN0188A3A	CN15VN3A
		230	450	240	ECN0181B3A	ECN0182B3A	ECN0183B3A ②	ECN0188B3A	CN15VN3B
		460	900	480	ECN0181C3A	ECN0182C3A	ECN0183C3A ②	ECN0188C3A	CN15VN3C
		575	900	600	ECN0181D3A	ECN0182D3A	ECN0183D3A ②	ECN0188D3A	CN15VN3D
9	2250	—	—	120	ECN0191A3A	ECN0192A3A	ECN0193A3A ②	ECN0198A3A	CN15WN3A
		230	800	240	ECN0191B3A	ECN0192B3A	ECN0193B3A ②	ECN0198B3A	CN15WN3B
		460	1600	480	ECN0191C3A	ECN0192C3A	ECN0193C3A ②	ECN0198C3A	CN15WN3C
		575	1600	600	ECN0191D3A	ECN0192D3A	ECN0193D3A ②	ECN0198D3A	CN15WN3D

① Maximum horsepower rating of contactors for 380V 50 Hz applications:

NEMA Size	00	0	1	2	3	4	5	6
Horsepower	1-1/2	5	10	25	50	75	150	300

② Type 4 (Painted steel) Sizes 7 – 9.

③ The Catalog Numbers listed in the Type 4X column are for Type 4X 304-Grade Stainless Steel, as indicated by the seventh digit **4**. Example: ECN0104A3A. To order Type 4X 316-Grade Stainless Steel, change that digit to **9**. To order Type 4 Painted Steel, change that digit to **3**. To order Nonmetallic, change that digit to **5**. For details on these Alternate Enclosures, see **Tab 14**.

Note: NEMA Sizes 00, 0 and 1 of 3-Pole/3-Phase Non-reversing Contactors are available with auxiliary contact omitted. Add Modification Code **A44**. Example: ECN0101A3A-**A44**.

Cover Control ..... **Page 3-21**
Other Magnet Coils ..... **Page 3-20**
Dimensions ..... **Page 15-2**
Accessories ..... **Page 16-4**
Modifications ..... **Page 16-40**
Technical Data ..... **Page 18-7**

Table 3-23. Class ECN01 — Non-reversing Contactor — 2-Pole

NEMA Size	Continuous Ampere Rating	Motor Voltage	Maximum hp Rating	Magnet Coil Voltage	Type 1 General Purpose Catalog Number	Type 3R Rainproof Catalog Number	Type 4X ② Watertight & Dust-Tight Stainless Steel Catalog Number	Type 12 Dust-Tight Industrial Catalog Number	Component Contactor (Open) Catalog Number
00	9	115	1/3	120	ECN01A1A2A	(Select Contactor from Size 0 Listing)			CN15AN2AB
		—	—	208	ECN01A1E2A				CN15AN2EB
		230	1	240	ECN01A1B2A				CN15AN2BB
		—	—	480	ECN01A1C2A				CN15AN2CB
		—	—	600	ECN01A1D2A				CN15AN2DB
0	18	115	1	120	ECN0101A2A	ECN0102A2A	ECN0104A2A	ECN0108A2A	CN15BN2AB
		—	—	208	ECN0101E2A	ECN0102E2A	ECN0104E2A	ECN0108E2A	CN15BN2EB
		230	2	240	ECN0101B2A	ECN0102B2A	ECN0104B2A	ECN0108B2A	CN15BN2BB
		—	—	480	ECN0101C2A	ECN0102C2A	ECN0104C2A	ECN0108C2A	CN15BN2CB
		—	—	600	ECN0101D2A	ECN0102D2A	ECN0104D2A	ECN0108D2A	CN15BN2DB
1	27	115	2	120	ECN0111A2A	ECN0112A2A	ECN0114A2A	ECN0118A2A	CN15DN2AB
		—	—	208	ECN0111E2A	ECN0112E2A	ECN0114E2A	ECN0118E2A	CN15DN2EB
		230	3	240	ECN0111B2A	ECN0112B2A	ECN0114B2A	ECN0118B2A	CN15DN2BB
		—	—	480	ECN0111C2A	ECN0112C2A	ECN0114C2A	ECN0118C2A	CN15DN2CB
		—	—	600	ECN0111D2A	ECN0112D2A	ECN0114D2A	ECN0118D2A	CN15DN2DB
2	45	115	3	120	ECN0121A2A	ECN0122A2A	ECN0124A2A	ECN0128A2A	CN15GN2AB
		—	—	208	ECN0121E2A	ECN0122E2A	ECN0124E2A	ECN0128E2A	CN15GN2EB
		230	7-1/2	240	ECN0121B2A	ECN0122B2A	ECN0124B2A	ECN0128B2A	CN15GN2BB
		—	—	480	ECN0121C2A	ECN0122C2A	ECN0124C2A	ECN0128C2A	CN15GN2CB
		—	—	600	ECN0121D2A	ECN0122D2A	ECN0124D2A	ECN0128D2A	CN15GN2DB
3	90	115	7-1/2	120	ECN0131A2A	ECN0132A2A	ECN0134A2A	ECN0138A2A	CN15KN2A
		—	—	208	ECN0131E2A	ECN0132E2A	ECN0134E2A	ECN0138E2A	CN15KN2E
		230	15	240	ECN0131B2A	ECN0132B2A	ECN0134B2A	ECN0138B2A	CN15KN2B
		—	—	480	ECN0131C2A	ECN0132C2A	ECN0134C2A	ECN0138C2A	CN15KN2C
		—	—	600	ECN0131D2A	ECN0132D2A	ECN0134D2A	ECN0138D2A	CN15KN2D
4	135	—	—	120	ECN0141A2A	ECN0142A2A	ECN0144A2A	ECN0148A2A	CN15NN2A
		—	—	208	ECN0141E2A	ECN0142E2A	ECN0144E2A	ECN0148E2A	CN15NN2E
		—	—	240	ECN0141B2A	ECN0142B2A	ECN0144B2A	ECN0148B2A	CN15NN2B
		—	—	480	ECN0141C2A	ECN0142C2A	ECN0144C2A	ECN0148C2A	CN15NN2C
		—	—	600	ECN0141D2A	ECN0142D2A	ECN0144D2A	ECN0148D2A	CN15NN2D
5	270	—	—	120	ECN0151A2A	ECN0152A2A	ECN0154A2A	ECN0158A2A	CN15SN2A
		—	—	208	ECN0151E2A	ECN0152E2A	ECN0154E2A	ECN0158E2A	CN15SN2E
		—	—	240	ECN0151B2A	ECN0152B2A	ECN0154B2A	ECN0158B2A	CN15SN2B
		—	—	480	ECN0151C2A	ECN0152C2A	ECN0154C2A	ECN0158C2A	CN15SN2C
		—	—	600	ECN0151D2A	ECN0152D2A	ECN0154D2A	ECN0158D2A	CN15SN2D
6	540	—	—	120	ECN0161A2A	ECN0162A2A	ECN0164A2A	ECN0168A2A	CN15TN2A
		—	—	208	ECN0161E2A	ECN0162E2A	ECN0164E2A	ECN0168E2A	CN15TN2E
		—	—	240	ECN0161B2A	ECN0162B2A	ECN0164B2A	ECN0168B2A	CN15TN2B
		—	—	480	ECN0161C2A	ECN0162C2A	ECN0164C2A	ECN0168C2A	CN15TN2C
		—	—	600	ECN0161D2A	ECN0162D2A	ECN0164D2A	ECN0168D2A	CN15TN2D
7	810	—	—	120	ECN0171A2A	ECN0172A2A	ECN0173A2A ①	ECN0178A2A	CN15UN2A
		—	—	208	ECN0171E2A	ECN0172E2A	ECN0173E2A ①	ECN0178E2A	CN15UN2E
		—	—	240	ECN0171B2A	ECN0172B2A	ECN0173B2A ①	ECN0178B2A	CN15UN2B
		—	—	480	ECN0171C2A	ECN0172C2A	ECN0173C2A ①	ECN0178C2A	CN15UN2C
		—	—	600	ECN0171D2A	ECN0172D2A	ECN0173D2A ①	ECN0178D2A	CN15UN2D
8	1215	—	—	120	ECN0181A2A	ECN0182A2A	ECN0183A2A ①	ECN0188A2A	CN15VN2A
		—	—	208	ECN0181E2A	ECN0182E2A	ECN0183E2A ①	ECN0188E2A	CN15VN2E
		—	—	240	ECN0181B2A	ECN0182B2A	ECN0183B2A ①	ECN0188B2A	CN15VN2B
		—	—	480	ECN0181C2A	ECN0182C2A	ECN0183C2A ①	ECN0188C2A	CN15VN2C
		—	—	600	ECN0181D2A	ECN0182D2A	ECN0183D2A ①	ECN0188D2A	CN15VN2D
9	2250	—	—	120	ECN0181A2A	ECN0192A2A	ECN0193A2A ①	ECN0198A2A	CN15WN2A
		—	—	208	ECN0181E2A	ECN0192E2A	ECN0193E2A ①	ECN0198E2A	CN15WN2E
		—	—	240	ECN0191B2A	ECN0192B2A	ECN0193B2A ①	ECN0198B2A	CN15WN2B
		—	—	480	ECN0191C2A	ECN0192C2A	ECN0193C2A ①	ECN0198C2A	CN15WN2C
		—	—	600	ECN0191D2A	ECN0192D2A	ECN0193D2A ①	ECN0198D2A	CN15WN2D

① Type 4 (Painted steel) Sizes 7 – 9.

② The Catalog Numbers listed in the Type 4X column are for Type 4X 304-Grade Stainless Steel, as indicated by the seventh digit **4**. Example: ECN0104A2A. To order Type 4X 316-Grade Stainless Steel, change that digit to **9**. To order Type 4 Painted Steel, change that digit to **3**. To order Nonmetallic, change that digit to **5**. For details on these Alternate Enclosures, see **Tab 14**.

Note: NEMA Sizes 00, 0 and 1 of 2-Pole/2-Phase Non-reversing Contactors are available with auxiliary contact omitted. Add Modification Code **A44**. Example: ECN0101A2A-**A44**.

Cover Control ..... **Page 3-21**
Other Magnet Coils ..... **Page 3-20**
Dimensions ..... **Page 15-2**
Accessories ..... **Page 16-4**
Modifications ..... **Page 16-40**
Technical Data ..... **Page 18-7**

Table 3-24. Class ECN01 — Non-reversing Contactor — 4-Pole

NEMA Size	Continuous Ampere Rating	Motor Voltage	Maximum hp Rating	Magnet Coil Voltage	Type 1 General Purpose	Type 3R Rainproof	Type 4X ① Watertight & Dust-Tight Stainless Steel	Type 12 Dust-Tight Industrial	Component Contactor (Open)
					Catalog Number	Catalog Number	Catalog Number	Catalog Number	Catalog Number
00	9	—	—	120	ECN01A1A4A	(Select Contactor from Size 0 Listing)			CN15AN4AB
		200	1-1/2	208	ECN01A1E4A				CN15AN4EB
		230	1-1/2	240	ECN01A1B4A				CN15AN4BB
		460	2	480	ECN01A1C4A				CN15AN4CB
		575	2	600	ECN01A1D4A				CN15AN4DB
0	18	—	—	120	ECN0101A4A	ECN0102A4A	ECN0104A4A	ECN0108A4A	(Select Contactor from Size 1 Listing)
		200	3	208	ECN0101E4A	ECN0102E4A	ECN0104E4A	ECN0108E4A	
		230	3	240	ECN0101B4A	ECN0102B4A	ECN0104B4A	ECN0108B4A	
		460	5	480	ECN0101C4A	ECN0102C4A	ECN0104C4A	ECN0108C4A	
		575	5	600	ECN0101D4A	ECN0102D4A	ECN0104D4A	ECN0108D4A	
1	27	—	—	120	ECN0111A4A	ECN0112A4A	ECN0114A4A	ECN0118A4A	CN15DN4AB
		200	7-1/2	208	ECN0111E4A	ECN0112E4A	ECN0114E4A	ECN0118E4A	CN15DN4EB
		230	7-1/2	240	ECN0111B4A	ECN0112B4A	ECN0114B4A	ECN0118B4A	CN15DN4BB
		460	10	480	ECN0111C4A	ECN0112C4A	ECN0114C4A	ECN0118C4A	CN15DN4CB
		575	10	600	ECN0111D4A	ECN0112D4A	ECN0114D4A	ECN0118D4A	CN15DN4DB
2	45	—	—	120	ECN0121A4A	ECN0122A4A	ECN0124A4A	ECN0128A4A	CN15GN4AB
		200	10	208	ECN0121E4A	ECN0122E4A	ECN0124E4A	ECN0128E4A	CN15GN4EB
		230	15	240	ECN0121B4A	ECN0122B4A	ECN0124B4A	ECN0128B4A	CN15GN4BB
		460	25	480	ECN0121C4A	ECN0122C4A	ECN0124C4A	ECN0128C4A	CN15GN4CB
		575	25	600	ECN0121D4A	ECN0122D4A	ECN0124D4A	ECN0128D4A	CN15GN4DB

① The Catalog Numbers listed in the Type 4X column are for Type 4X 304-Grade Stainless Steel, as indicated by the seventh digit **4**. Example: ECN0104A4A. To order Type 4X 316-Grade Stainless Steel, change that digit to **9**. To order Type 4 Painted Steel, change that digit to **3**. To order Nonmetallic, change that digit to **5**. For details on these Alternate Enclosures, see **Tab 14**.

Table 3-25. Class ECN01 — Non-reversing Contactor — 5-Pole

NEMA Size	Continuous Ampere Rating	Motor Voltage	Maximum hp Rating	Magnet Coil Voltage	Type 1 General Purpose	Type 3R Rainproof	Type 4X ① Watertight & Dust-Tight Stainless Steel	Type 12 Dust-Tight Industrial	Component Contactor (Open)
					Catalog Number	Catalog Number	Catalog Number	Catalog Number	Catalog Number
00	9	—	—	120	ECN01A1A5A	(Select Contactor from Size 1 Listing)			
		200	1-1/2	208	ECN01A1E5A				
		230	1-1/2	240	ECN01A1B5A				
		460	2	480	ECN01A1C5A				
		575	2	600	ECN01A1D5A				
0	18	—	—	120	ECN0101A5A	(Select Contactor from Size 1 Listing)			
		200	3	208	ECN0101E5A				
		230	3	240	ECN0101B5A				
		460	5	480	ECN0101C5A				
		575	5	600	ECN0101D5A				
1	27	—	—	120	ECN0111A5A	ECN0112A5A	ECN0114A5A	ECN0118A5A	CN15DN5AB
		200	7-1/2	208	ECN0111E5A	ECN0112E5A	ECN0114E5A	ECN0118E5A	CN15DN5EB
		230	7-1/2	240	ECN0111B5A	ECN0112B5A	ECN0114B5A	ECN0118B5A	CN15DN5BB
		460	10	480	ECN0111C5A	ECN0112C5A	ECN0114C5A	ECN0118C5A	CN15DN5CB
		575	10	600	ECN0111D5A	ECN0112D5A	ECN0114D5A	ECN0118D5A	CN15DN5DB
2	45	—	—	120	ECN0121A5A	ECN0122A5A	ECN0124A5A	ECN0128A5A	CN15GN5AB
		200	10	208	ECN0121E5A	ECN0122E5A	ECN0124E5A	ECN0128E5A	CN15GN5EB
		230	15	240	ECN0121B5A	ECN0122B5A	ECN0124B5A	ECN0128B5A	CN15GN5BB
		460	25	480	ECN0121C5A	ECN0122C5A	ECN0124C5A	ECN0128C5A	CN15GN5CB
		575	25	600	ECN0121D5A	ECN0122D5A	ECN0124D5A	ECN0128D5A	CN15GN5DB

① The Catalog Numbers listed in the Type 4X column are for Type 4X 304-Grade Stainless Steel, as indicated by the seventh digit **4**. Example: ECN0114A5A. To order Type 4X 316-Grade Stainless Steel, change that digit to **9**. To order Type 4 Painted Steel, change that digit to **3**. To order Nonmetallic, change that digit to **5**. For details on these Alternate Enclosures, see **Tab 14**.

Cover Control ..... **Page 3-21**
Other Magnet Coils ..... **Page 3-20**
Dimensions ..... **Page 15-2**
Accessories ..... **Page 16-4**
Modifications ..... **Page 16-40**
Technical Data ..... **Page 18-7**

Table 3-26. Class ECN02 — Reversing Contactor — 3-Pole

NEMA Size	Continuous Ampere Rating	Motor Voltage	Maximum hp Rating ①	Magnet Coil Voltage	Type 1 General Purpose	Type 3R Rainproof	Type 4X ③ Watertight & Dust-Tight Stainless Steel	Type 12 Dust-Tight Industrial	Component Contactor (Open)
					Catalog Number	Catalog Number	Catalog Number	Catalog Number	Catalog Number
00	9	—	—	120	ECN02A1A3A	(Select Contactor from Size 0 Listing)			CN55AN3AB
		200	1-1/2	208	ECN02A1E3A				CN55AN3EB
		230	1-1/2	240	ECN02A1B3A				CN55AN3BB
		460	2	480	ECN02A1C3A				CN55AN3CB
		575	2	600	ECN02A1D3A				CN55AN3DB
0	18	—	—	120	ECN0201A3A	ECN0202A3A	ECN0204A3A	ECN0208A3A	CN55BN3AB
		200	3	208	ECN0201E3A	ECN0202E3A	ECN0204E3A	ECN0208E3A	CN55BN3EB
		230	3	240	ECN0201B3A	ECN0202B3A	ECN0204B3A	ECN0208B3A	CN55BN3BB
		460	5	480	ECN0201C3A	ECN0202C3A	ECN0204C3A	ECN0208C3A	CN55BN3CB
		575	5	600	ECN0201D3A	ECN0202D3A	ECN0204D3A	ECN0208D3A	CN55BN3DB
1	27	—	—	120	ECN0211A3A	ECN0212A3A	ECN0214A3A	ECN0218A3A	CN55DN3AB
		200	7-1/2	208	ECN0211E3A	ECN0212E3A	ECN0214E3A	ECN0218E3A	CN55DN3EB
		230	7-1/2	240	ECN0211B3A	ECN0212B3A	ECN0214B3A	ECN0218B3A	CN55DN3BB
		460	10	480	ECN0211C3A	ECN0212C3A	ECN0214C3A	ECN0218C3A	CN55DN3CB
		575	10	600	ECN0211D3A	ECN0212D3A	ECN0214D3A	ECN0218D3A	CN55DN3DB
2	45	—	—	120	ECN0221A3A	ECN0222A3A	ECN0224A3A	ECN0228A3A	CN15GN3AB
		200	10	208	ECN0221E3A	ECN0222E3A	ECN0224E3A	ECN0228E3A	CN55GN3EB
		230	15	240	ECN0221B3A	ECN0222B3A	ECN0224B3A	ECN0228B3A	CN55GN3BB
		460	25	480	ECN0221C3A	ECN0222C3A	ECN0224C3A	ECN0228C3A	CN55GN3CB
		575	25	600	ECN0221D3A	ECN0222D3A	ECN0224D3A	ECN0228D3A	CN55GN3DB
3	90	—	—	120	ECN0231A3A	ECN0232A3A	ECN0234A3A	ECN0238A3A	CN55KN3A
		200	25	208	ECN0231E3A	ECN0232E3A	ECN0234E3A	ECN0238E3A	CN55KN3E
		230	30	240	ECN0231B3A	ECN0232B3A	ECN0234B3A	ECN0238B3A	CN55KN3B
		460	50	480	ECN0231C3A	ECN0232C3A	ECN0234C3A	ECN0238C3A	CN55KN3C
		575	50	600	ECN0231D3A	ECN0232D3A	ECN0234D3A	ECN0238D3A	CN55KN3D
4	135	—	—	120	ECN0241A3A	ECN0242A3A	ECN0244A3A	ECN0248A3A	CN55NN3A
		200	40	208	ECN0241E3A	ECN0242E3A	ECN0244E3A	ECN0248E3A	CN55NN3E
		230	50	240	ECN0241B3A	ECN0242B3A	ECN0244B3A	ECN0248B3A	CN55NN3B
		460	100	480	ECN0241C3A	ECN0242C3A	ECN0244C3A	ECN0248C3A	CN55NN3C
		575	100	600	ECN0241D3A	ECN0242D3A	ECN0244D3A	ECN0248D3A	CN55NN3D
5	270	—	—	120	ECN0251A3A	ECN0252A3A	ECN0254A3A	ECN0258A3A	CN55SN3A
		200	75	208	ECN0251E3A	ECN0252E3A	ECN0254E3A	ECN0258E3A	CN55SN3E
		230	100	240	ECN0251B3A	ECN0252B3A	ECN0254B3A	ECN0258B3A	CN55SN3B
		460	200	480	ECN0251C3A	ECN0252C3A	ECN0254C3A	ECN0258C3A	CN55SN3C
		575	200	600	ECN0251D3A	ECN0252D3A	ECN0254D3A	ECN0258D3A	CN55SN3D
6	540	—	—	120	ECN0261A3A	ECN0262A3A	ECN0263A3A ②	ECN0268A3A	CN55TN3A
		200	150	208	ECN0261E3A	ECN0262E3A	ECN0263E3A ②	ECN0268E3A	CN55TN3E
		230	200	240	ECN0261B3A	ECN0262B3A	ECN0263B3A ②	ECN0268B3A	CN55TN3B
		460	400	480	ECN0261C3A	ECN0262C3A	ECN0263C3A ②	ECN0268C3A	CN55TN3C
		575	400	600	ECN0261D3A	ECN0262D3A	ECN0263D3A ②	ECN0268D3A	CN55TN3D
7	810	—	—	120	ECN0271A3A	ECN0272A3A	ECN0273A3A ②	ECN0278A3A	CN55UN3A
		230	300	240	ECN0271B3A	ECN0272B3A	ECN0273B3A ②	ECN0278B3A	CN55UN3B
		460	600	480	ECN0271C3A	ECN0272C3A	ECN0273C3A ②	ECN0278C3A	CN55UN3C
		575	600	600	ECN0271D3A	ECN0272D3A	ECN0273D3A ②	ECN0278D3A	CN55UN3D
8	1215	—	—	120	ECN0281A3A	ECN0282A3A	ECN0283A3A ②	ECN0288A3A	CN55VN3A
		230	450	240	ECN0281B3A	ECN0282B3A	ECN0283B3A ②	ECN0288B3A	CN55VN3B
		460	900	480	ECN0281C3A	ECN0282C3A	ECN0283C3A ②	ECN0288C3A	CN55VN3C
		575	900	600	ECN0281D3A	ECN0282D3A	ECN0283D3A ②	ECN0288D3A	CN55VN3D
9	2250	—	—	120	ECN0291A3A	ECN0292A3A	ECN0293A3A ②	ECN0298A3A	CN55WN3A
		230	800	240	ECN0291B3A	ECN0292B3A	ECN0293B3A ②	ECN0298B3A	CN55WN3B
		460	1600	480	ECN0291C3A	ECN0292C3A	ECN0293C3A ②	ECN0298C3A	CN55WN3C
		575	1600	600	ECN0291D3A	ECN0292D3A	ECN0293D3A ②	ECN0298D3A	CN55WN3D

① Maximum horsepower rating of contactors for 380V 50 Hz applications:

NEMA Size	00	0	1	2	3	4	5	6
Horsepower	1-1/2	5	10	25	50	75	150	300

② Type 4 (Painted steel) Sizes 6 – 9.

③ The Catalog Numbers listed in the Type 4X column are for Type 4X 304-Grade Stainless Steel, as indicated by the seventh digit **4**. Example: ECN0204A3A. To order Type 4X 316-Grade Stainless Steel, change that digit to **9**. To order Type 4 Painted Steel, change that digit to **3**. To order Nonmetallic, change that digit to **5**. For details on these Alternate Enclosures, see **Tab 14**.

Cover Control ..... **Page 3-21**
Other Magnet Coils ..... **Page 3-20**
Dimensions ..... **Page 15-2**
Accessories ..... **Page 16-4**
Modifications ..... **Page 16-40**
Technical Data ..... **Page 18-7**

Features

- 1-Phase or 3-Phase Magnetic
- 2- or 3-Pole Non-reversing or 3-Pole Reversing
- Standard Interchangeable Heater OLR
- Optional Electronic Overload
- 600V Maximum

Product Selection

Table 3-27. Class ECN05 — Non-combination Non-reversing Starter

NEMA Size	Motor Voltage	Maximum hp Rating ①	Magnet Coil Voltage	Type 1 General Purpose	Type 3R Rainproof	Type 4X ② Watertight & Dust-Tight Stainless Steel	Type 12 Dust-Tight Industrial External Reset	Component Starter (Open)
				Catalog Number	Catalog Number	Catalog Number	Catalog Number	Catalog Number
00	—	—	120	ECN05A1AAA	ECN05A2AAA	ECN05A4AAA	ECN05A8AAA	AN16AN0AC
	200	1-1/2	208	ECN05A1EAA	ECN05A2EAA	ECN05A4EAA	ECN05A8EAA	AN16AN0EC
	230	1-1/2	240	ECN05A1BAA	ECN05A2BAA	ECN05A4BAA	ECN05A8BAA	AN16AN0BC
	460	2	480	ECN05A1CAA	ECN05A2CAA	ECN05A4CAA	ECN05A8CAA	AN16AN0CC
	575	2	600	ECN05A1DAA	ECN05A2DAA	ECN05A4DAA	ECN05A8DAA	AN16AN0DC
0	—	—	120	ECN0501AAA	ECN0502AAA	ECN0504AAA	ECN0508AAA	AN16BN0AC
	200	3	208	ECN0501EAA	ECN0502EAA	ECN0504EAA	ECN0508EAA	AN16BN0EC
	230	3	240	ECN0501BAA	ECN0502BAA	ECN0504BAA	ECN0508BAA	AN16BN0BC
	460	5	480	ECN0501CAA	ECN0502CAA	ECN0504CAA	ECN0508CAA	AN16BN0CC
	575	5	600	ECN0501DAA	ECN0502DAA	ECN0504DAA	ECN0508DAA	AN16BN0DC
1	—	—	120	ECN0511AAA	ECN0512AAA	ECN0514AAA	ECN0518AAA	AN16DN0AB
	200	7-1/2	208	ECN0511EAA	ECN0512EAA	ECN0514EAA	ECN0518EAA	AN16DN0EB
	230	7-1/2	240	ECN0511BAA	ECN0512BAA	ECN0514BAA	ECN0518BAA	AN16DN0BB
	460	10	480	ECN0511CAA	ECN0512CAA	ECN0514CAA	ECN0518CAA	AN16DN0CB
	575	10	600	ECN0511DAA	ECN0512DAA	ECN0514DAA	ECN0518DAA	AN16DN0DB
2	—	—	120	ECN0521AAA	ECN0522AAA	ECN0524AAA	ECN0528AAA	AN16GN0AB
	200	10	208	ECN0521EAA	ECN0522EAA	ECN0524EAA	ECN0528EAA	AN16GN0EB
	230	15	240	ECN0521BAA	ECN0522BAA	ECN0524BAA	ECN0528BAA	AN16GN0BB
	460	25	480	ECN0521CAA	ECN0522CAA	ECN0524CAA	ECN0528CAA	AN16GN0CB
	575	25	600	ECN0521DAA	ECN0522DAA	ECN0524DAA	ECN0528DAA	AN16GN0DB
3	—	—	120	ECN0531AAA	ECN0532AAA	ECN0534AAA	ECN0538AAA	AN16KN0A
	200	25	208	ECN0531EAA	ECN0532EAA	ECN0534EAA	ECN0538EAA	AN16KN0E
	230	30	240	ECN0531BAA	ECN0532BAA	ECN0534BAA	ECN0538BAA	AN16KN0B
	460	50	480	ECN0531CAA	ECN0532CAA	ECN0534CAA	ECN0538CAA	AN16KN0C
	575	50	600	ECN0531DAA	ECN0532DAA	ECN0534DAA	ECN0538DAA	AN16KN0D

Starters do not include heater packs. Select 1 carton of 3 heater packs. For Heater Pack Selection, see **Page 16-6**.
Starters with Electronic Overload, see **Page 16-45** of Modification Codes.

① Maximum horsepower rating of starters for 380V 50 Hz applications:

NEMA Size	00	0	1	2	3	4	5	6
Horsepower	1-1/2	5	10	25	50	75	150	300

② The Catalog Numbers listed in the Type 4X column are for Type 4X 304-Grade Stainless Steel, as indicated by the seventh digit **4**. Example: ECN0504AAA. To order Type 4X 316-Grade Stainless Steel, change that digit to **9**. To order Type 4 Painted Steel, change that digit to **3**. To order Nonmetallic, change that digit to **5**. For details on these Alternate Enclosures, see **Tab 14**.

Cover Control ..... **Page 3-21**
Other Magnet Coils ..... **Page 3-20**
Dimensions ..... **Page 15-2**
Accessories ..... **Page 16-4**
Modifications ..... **Page 16-40**
Technical Data ..... **Page 18-7**

Table 3-27. Class ECN05 — Non-combination Non-reversing Starter (Continued)

NEMA Size	Motor Voltage	Maximum hp Rating ①	Magnet Coil Voltage	Type 1 General Purpose	Type 3R Rainproof	Type 4X ③ Watertight & Dust-Tight Stainless Steel	Type 12 Dust-Tight Industrial External Reset	Component Starter (Open)
				Catalog Number	Catalog Number	Catalog Number	Catalog Number	Catalog Number
4	—	—	120	ECN0541AAA	ECN0542AAA	ECN0544AAA	ECN0548AAA	AN16NN0A
	200	40	208	ECN0541EAA	ECN0542EAA	ECN0544EAA	ECN0548EAA	AN16NN0E
	230	50	240	ECN0541BAA	ECN0542BAA	ECN0544BAA	ECN0548BAA	AN16NN0B
	460	100	480	ECN0541CAA	ECN0542CAA	ECN0544CAA	ECN0548CAA	AN16NN0C
	575	100	600	ECN0541DAA	ECN0542DAA	ECN0544DAA	ECN0548DAA	AN16NN0D
5	—	—	120	ECN0551AAA	ECN0552AAA	ECN0554AAA	ECN0558AAA	AN16SN0AB
	200	75	208	ECN0551EAA	ECN0552EAA	ECN0554EAA	ECN0558EAA	AN16SN0EB
	230	100	240	ECN0551BAA	ECN0552BAA	ECN0554BAA	ECN0558BAA	AN16SN0BB
	460	200	480	ECN0551CAA	ECN0552CAA	ECN0554CAA	ECN0558CAA	AN16SN0CB
	575	200	600	ECN0551DAA	ECN0552DAA	ECN0554DAA	ECN0558DAA	AN16SN0DB
6	—	—	120	ECN0561AAA	ECN0562AAA	ECN0564AAA	ECN0568AAA	AN16TN0AB
	200	150	208	ECN0561EAA	ECN0562EAA	ECN0564EAA	ECN0568EAA	AN16TN0EB
	230	200	240	ECN0561BAA	ECN0562BAA	ECN0564BAA	ECN0568BAA	AN16TN0BB
	460	400	480	ECN0561CAA	ECN0562CAA	ECN0564CAA	ECN0568CAA	AN16TN0CB
	575	400	600	ECN0561DAA	ECN0562DAA	ECN0564DAA	ECN0568DAA	AN16TN0DB
7	—	—	120	ECN0571AAA	ECN0572AAA	ECN0573AAA ②	ECN0578AAA	AN16UN0AB
	230	300	240	ECN0571BAA	ECN0572BAA	ECN0573BAA ②	ECN0578BAA	AN16UN0BB
	460	600	480	ECN0571CAA	ECN0572CAA	ECN0573CAA ②	ECN0578CAA	AN16UN0CB
	575	600	600	ECN0571DAA	ECN0572DAA	ECN0573DAA ②	ECN0578DAA	AN16UN0DB
8	—	—	120	ECN0581AAA	ECN0582AAA	ECN0583AAA ②	ECN0588AAA	AN16VN0AB
	230	450	240	ECN0581BAA	ECN0582BAA	ECN0583BAA ②	ECN0588BAA	AN16VN0BB
	460	900	480	ECN0581CAA	ECN0582CAA	ECN0583CAA ②	ECN0588CAA	AN16VN0CB
	575	900	600	ECN0581DAA	ECN0582DAA	ECN0583DAA ②	ECN0588DAA	AN16VN0DB
9	—	—	120	ECN0591AAA	ECN0592AAA	ECN0593AAA ②	ECN0598AAA	AN16WN0A
	230	800	240	ECN0591BAA	ECN0592BAA	ECN0593BAA ②	ECN0598BAA	AN16WN0B
	460	1600	480	ECN0591CAA	ECN0592CAA	ECN0593CAA ②	ECN0598CAA	AN16WN0C
	575	1600	600	ECN0591DAA	ECN0592DAA	ECN0593DAA ②	ECN0598DAA	AN16WN0D

Starters do not include heater packs. Select 1 carton of 3 heater packs. For Heater Pack Selection, see **Page 16-6**.
Starters with Electronic Overload, see **Page 16-45** of Modification Codes.

① Maximum horsepower rating of starters for 380V 50 Hz applications:

NEMA Size	00	0	1	2	3	4	5	6
Horsepower	1-1/2	5	10	25	50	75	150	300

② Type 4 (Painted steel) Sizes 7 – 9.

③ The Catalog Numbers listed in the Type 4X column are for Type 4X 304-Grade Stainless Steel, as indicated by the seventh digit **4**. Example: ECN0504AAA. To order Type 4X 316-Grade Stainless Steel, change that digit to **9**. To order Type 4 Painted Steel, change that digit to **3**. To order Nonmetallic, change that digit to **5**. For details on these Alternate Enclosures, see **Tab 14**.

Cover Control ..... **Page 3-21**
Other Magnet Coils ..... **Page 3-20**
Dimensions ..... **Page 15-2**
Accessories ..... **Page 16-4**
Modifications ..... **Page 16-40**
Technical Data ..... **Page 18-7**

Table 3-28. Class ECN06 — Non-combination Reversing Starter

NEMA Size	Motor Voltage	Maximum hp Rating ①	Magnet Coil Voltage	Type 1 General Purpose	Type 3R Rainproof	Type 4X ③ Watertight & Dust-Tight Stainless Steel	Type 12 Dust-Tight Industrial External Reset	Component Starter (Open)
				Catalog Number	Catalog Number	Catalog Number	Catalog Number	Catalog Number
00	—	—	120	ECN06A1AAA	ECN06A2AAA	ECN06A4AAA	ECN06A8AAA	AN56AN0AC
	200	1-1/2	208	ECN06A1EAA	ECN06A2EAA	ECN06A4EAA	ECN06A8EAA	AN56AN0EC
	230	1-1/2	240	ECN06A1BAA	ECN06A2BAA	ECN06A4BAA	ECN06A8BAA	AN56AN0BC
	460	2	480	ECN06A1CAA	ECN06A2CAA	ECN06A4CAA	ECN06A8CAA	AN56AN0CC
	575	2	600	ECN06A1DAA	ECN06A2DAA	ECN06A4DAA	ECN06A8DAA	AN56AN0DC
0	—	—	120	ECN0601AAA	ECN0602AAA	ECN0604AAA	ECN0608AAA	AN56BN0AC
	200	3	208	ECN0601EAA	ECN0602EAA	ECN0604EAA	ECN0608EAA	AN56BN0EC
	230	3	240	ECN0601BAA	ECN0602BAA	ECN0604BAA	ECN0608BAA	AN56BN0BC
	460	5	480	ECN0601CAA	ECN0602CAA	ECN0604CAA	ECN0608CAA	AN56BN0CC
	575	5	600	ECN0601DAA	ECN0602DAA	ECN0604DAA	ECN0608DAA	AN56BN0DC
1	—	—	120	ECN0611AAA	ECN0612AAA	ECN0614AAA	ECN0618AAA	AN56DN0AB
	200	7-1/2	208	ECN0611EAA	ECN0612EAA	ECN0614EAA	ECN0618EAA	AN56DN0EB
	230	7-1/2	240	ECN0611BAA	ECN0612BAA	ECN0614BAA	ECN0618BAA	AN56DN0BB
	460	10	480	ECN0611CAA	ECN0612CAA	ECN0614CAA	ECN0618CAA	AN56DN0CB
	575	10	600	ECN0611DAA	ECN0612DAA	ECN0614DAA	ECN0618DAA	AN56DN0DB
2	—	—	120	ECN0621AAA	ECN0622AAA	ECN0624AAA	ECN0628AAA	AN56GN0AB
	200	10	208	ECN0621EAA	ECN0622EAA	ECN0624EAA	ECN0628EAA	AN56GN0EB
	230	15	240	ECN0621BAA	ECN0622BAA	ECN0624BAA	ECN0628BAA	AN56GN0BB
	460	25	480	ECN0621CAA	ECN0622CAA	ECN0624CAA	ECN0628CAA	AN56GN0CB
	575	25	600	ECN0621DAA	ECN0622DAA	ECN0624DAA	ECN0628DAA	AN56GN0DB
3	—	—	120	ECN0631AAA	ECN0632AAA	ECN0634AAA	ECN0638AAA	AN56KN0A
	200	25	208	ECN0631EAA	ECN0632EAA	ECN0634EAA	ECN0638EAA	AN56KN0E
	230	30	240	ECN0631BAA	ECN0632BAA	ECN0634BAA	ECN0638BAA	AN56KN0B
	460	50	480	ECN0631CAA	ECN0632CAA	ECN0634CAA	ECN0638CAA	AN56KN0C
	575	50	600	ECN0631DAA	ECN0632DAA	ECN0634DAA	ECN0638DAA	AN56KN0D
4	—	—	120	ECN0641AAA	ECN0642AAA	ECN0644AAA	ECN0648AAA	AN56NN0A
	200	40	208	ECN0641EAA	ECN0642EAA	ECN0644EAA	ECN0648EAA	AN56NN0E
	230	50	240	ECN0641BAA	ECN0642BAA	ECN0644BAA	ECN0648BAA	AN56NN0B
	460	100	480	ECN0641CAA	ECN0642CAA	ECN0644CAA	ECN0648CAA	AN56NN0C
	575	100	600	ECN0641DAA	ECN0642DAA	ECN0644DAA	ECN0648DAA	AN56NN0D
5	—	—	120	ECN0651AAA	ECN0652AAA	ECN0654AAA	ECN0658AAA	AN56SN0AB
	200	75	208	ECN0651EAA	ECN0652EAA	ECN0654EAA	ECN0658EAA	AN56SN0EB
	230	100	240	ECN0651BAA	ECN0652BAA	ECN0654BAA	ECN0658BAA	AN56SN0BB
	460	200	480	ECN0651CAA	ECN0652CAA	ECN0654CAA	ECN0658CAA	AN56SN0CB
	575	200	600	ECN0651DAA	ECN0652DAA	ECN0654DAA	ECN0658DAA	AN56SN0DB
6	—	—	120	ECN0661AAA	ECN0662AAA	ECN0663AAA ②	ECN0668AAA	AN56TN0AB
	200	150	208	ECN0661EAA	ECN0662EAA	ECN0663EAA ②	ECN0668EAA	AN56TN0EB
	230	200	240	ECN0661BAA	ECN0662BAA	ECN0663BAA ②	ECN0668BAA	AN56TN0BB
	460	400	480	ECN0661CAA	ECN0662CAA	ECN0663CAA ②	ECN0668CAA	AN56TN0CB
	575	400	600	ECN0661DAA	ECN0662DAA	ECN0663DAA ②	ECN0668DAA	AN56TN0DB
7	—	—	120	ECN0671AAA	ECN0672AAA	ECN0673AAA ②	ECN0678AAA	AN56UN0AB
	230	300	240	ECN0671BAA	ECN0672BAA	ECN0673BAA ②	ECN0678BAA	AN56UN0BB
	460	600	480	ECN0671CAA	ECN0672CAA	ECN0673CAA ②	ECN0678CAA	AN56UN0CB
	575	600	600	ECN0671DAA	ECN0672DAA	ECN0673DAA ②	ECN0678DAA	AN56UN0DB
8	—	—	120	ECN0681AAA	ECN0682AAA	ECN0683AAA ②	ECN0688AAA	AN56VN0AB
	230	450	240	ECN0681BAA	ECN0682BAA	ECN0683BAA ②	ECN0688BAA	AN56VN0BB
	460	900	480	ECN0681CAA	ECN0682CAA	ECN0683CAA ②	ECN0688CAA	AN56VN0CB
	575	900	600	ECN0681DAA	ECN0682DAA	ECN0683DAA ②	ECN0688DAA	AN56VN0DB
9	—	—	120	ECN0691AAA	ECN0692AAA	ECN0693AAA ②	ECN0698AAA	AN56WN0A
	230	800	240	ECN0691BAA	ECN0692BAA	ECN0693BAA ②	ECN0698BAA	AN56WN0B
	460	1600	480	ECN0691CAA	ECN0692CAA	ECN0693CAA ②	ECN0698CAA	AN56WN0C
	575	1600	600	ECN0691DAA	ECN0692DAA	ECN0693DAA ②	ECN0698DAA	AN56WN0D

Starters do not include heater packs. Select 1 carton of 3 heater packs. For Heater Pack Selection, see **Page 16-6**.
Starters with Electronic Overload, see **Page 16-45** of Modification Codes.

① Maximum horsepower rating of starters for 380V 50 Hz applications:

NEMA Size	00	0	1	2	3	4	5	6
Horsepower	1-1/2	5	10	25	50	75	150	300

② Type 4 (Painted steel) Sizes 6 – 9.

③ The Catalog Numbers listed in the Type 4X column are for Type 4X 304-Grade Stainless Steel, as indicated by the seventh digit **4**. Example: ECN0604AAA. To order Type 4X 316-Grade Stainless Steel, change that digit to **9**. To order Type 4 Painted Steel, change that digit to **3**. To order Nonmetallic, change that digit to **5**. For details on these Alternate Enclosures, see **Tab 14**.

Cover Control ..... **Page 3-21**
Other Magnet Coils ..... **Page 3-20**
Dimensions ..... **Page 15-2**
Accessories ..... **Page 16-4**
Modifications ..... **Page 16-40**
Technical Data ..... **Page 18-7**

Table 3-29. Class ECN07 — Non-combination Non-reversing Starter with CPT

NEMA Size	Primary Voltage ②	Max. hp Rating ①	Secondary Voltage / Magnet Coil Voltage	Type 1 General Purpose	Type 3R Rainproof	Type 4X Watertight & Dust-Tight Stainless Steel ④	Type 12 Dust-Tight Industrial External Reset	Component Starter (Open)
				Catalog Number	Catalog Number	Catalog Number	Catalog Number	Catalog Number
00	208	1-1/2	120	ECN07A1EAA	ECN07A2EAA	ECN07A4EAA	ECN07A8EAA	AN16AN0EC
	240	1-1/2		ECN07A1BAA	ECN07A2BAA	ECN07A4BAA	ECN07A8BAA	AN16AN0BC
	480	2		ECN07A1CAA	ECN07A2CAA	ECN07A4CAA	ECN07A8CAA	AN16AN0CC
	600	3		ECN07A1DAA	ECN07A2DAA	ECN07A4DAA	ECN07A8DAA	AN16AN0DC
0	208	3	120	ECN0701EAA	ECN0702EAA	ECN0704EAA	ECN0708EAA	AN16BN0EC
	240	3		ECN0701BAA	ECN0702BAA	ECN0704BAA	ECN0708BAA	AN16BN0BC
	480	5		ECN0701CAA	ECN0702CAA	ECN0704CAA	ECN0708CAA	AN16BN0CC
	600	5		ECN0701DAA	ECN0702DAA	ECN0704DAA	ECN0708DAA	AN16BN0DC
1	208	7-1/2	120	ECN0711EAA	ECN0712EAA	ECN0714EAA	ECN0718EAA	AN16DN0EB
	240	7-1/2		ECN0711BAA	ECN0712BAA	ECN0714BAA	ECN0718BAA	AN16DN0BB
	480	10		ECN0711CAA	ECN0712CAA	ECN0714CAA	ECN0718CAA	AN16DN0CB
	600	10		ECN0711DAA	ECN0712DAA	ECN0714DAA	ECN0718DAA	AN16DN0DB
2	208	10	120	ECN0721EAA	ECN0722EAA	ECN0724EAA	ECN0728EAA	AN16GN0EB
	240	15		ECN0721BAA	ECN0722BAA	ECN0724BAA	ECN0728BAA	AN16GN0BB
	480	25		ECN0721CAA	ECN0722CAA	ECN0724CAA	ECN0728CAA	AN16GN0CB
	600	25		ECN0721DAA	ECN0722DAA	ECN0724DAA	ECN0728DAA	AN16GN0DB
3	208	25	120	ECN0731EAA	ECN0732EAA	ECN0734EAA	ECN0738EAA	AN16KN0E
	240	30		ECN0731BAA	ECN0732BAA	ECN0734BAA	ECN0738BAA	AN16KN0B
	480	50		ECN0731CAA	ECN0732CAA	ECN0734CAA	ECN0738CAA	AN16KN0C
	600	50		ECN0731DAA	ECN0732DAA	ECN0734DAA	ECN0738DAA	AN16KN0D
4	208	40	120	ECN0741EAA	ECN0742EAA	ECN0744EAA	ECN0748EAA	AN16NN0E
	240	50		ECN0741BAA	ECN0742BAA	ECN0744BAA	ECN0748BAA	AN16NN0B
	480	100		ECN0741CAA	ECN0742CAA	ECN0744CAA	ECN0748CAA	AN16NN0C
	600	100		ECN0741DAA	ECN0742DAA	ECN0744DAA	ECN0748DAA	AN16NN0D
5	208	75	120	ECN0751EAA	ECN0752EAA	ECN0754EAA	ECN0758EAA	AN16SN0EB
	240	100		ECN0751BAA	ECN0752BAA	ECN0754BAA	ECN0758BAA	AN16SN0BB
	480	200		ECN0751CAA	ECN0752CAA	ECN0754CAA	ECN0758CAA	AN16SN0CB
	600	200		ECN0751DAA	ECN0752DAA	ECN0754DAA	ECN0758DAA	AN16SN0DB
6	208	150	120	ECN0761EAA	ECN0762EAA	ECN0763EAA ③	ECN0768EAA	AN56TN0EB
	240	200		ECN0761BAA	ECN0762BAA	ECN0763BAA ③	ECN0768BAA	AN56TN0BB
	480	400		ECN0761CAA	ECN0762CAA	ECN0763CAA ③	ECN0768CAA	AN56TN0CB
	600	400		ECN0761DAA	ECN0762DAA	ECN0763DAA ③	ECN0768DAA	AN56TN0DB
7	240	300	120	ECN0771BAA	ECN0772BAA	ECN0773BAA ③	ECN0778BAA	AN16UN0BB
	480	600		ECN0771CAA	ECN0772CAA	ECN0773CAA ③	ECN0778CAA	AN16UN0CB
	600	600		ECN0771DAA	ECN0772DAA	ECN0773DAA ③	ECN0778DAA	AN16UN0DB
8	240	450	120	ECN0781BAA	ECN0782BAA	ECN0783BAA ③	ECN0788BAA	AN16VN0BB
	480	900		ECN0781CAA	ECN0782CAA	ECN0783CAA ③	ECN0788CAA	AN16VN0CB
	600	900		ECN0781DAA	ECN0782DAA	ECN0783DAA ③	ECN0788DAA	AN16VN0DB
9	240	800	120	ECN0791BAA	ECN0792BAA	ECN0793BAA ③	ECN0798BAA	AN16WN0B
	480	1600		ECN0791CAA	ECN0792CAA	ECN0793CAA ③	ECN0798CAA	AN16WN0C
	600	1600		ECN0791DAA	ECN0792DAA	ECN0793DAA ③	ECN0798DAA	AN16WN0D

Starters do not include heater packs. Select 1 carton of 3 heater packs. For Heater Pack Selection, see **Page 16-6**.
Starters with Electronic Overload, see **Page 16-45** of Modification Codes.

① Maximum horsepower rating of starters for 380V 50 Hz applications:

NEMA Size	00	0	1	2	3	4	5	6
Horsepower	1-1/2	5	10	25	50	75	150	300

② Other control power transformer primary and/or secondary voltages, see **Page 3-20**.

③ Type 4 (Painted steel) Sizes 6 – 9.

④ The Catalog Numbers listed in the Type 4X column are for Type 4X 304-Grade Stainless Steel, as indicated by the seventh digit **4**. Example: ECN0704EAA. To order Type 4X 316-Grade Stainless Steel, change that digit to **9**. To order Type 4 Painted Steel, change that digit to **3**. To order Nonmetallic, change that digit to **5**. For details on these Alternate Enclosures, see **Tab 14**.

ECN0712CAA

Cover Control ..... **Page 3-21**
Other Magnet Coils ..... **Page 3-20**
Dimensions ..... **Page 15-2**
Accessories ..... **Page 16-4**
Modifications ..... **Page 16-40**
Technical Data ..... **Page 18-7**

Table 3-30. Class ECN08 — Non-combination Single Phase Non-reversing Starter

NEMA Size	Motor Voltage	Max. hp Rating	Magnet Coil Voltage	Type 1 General Purpose	Type 3R Rainproof	Type 4X ① Watertight & Dust-Tight Stainless Steel	Type 12 Dust-Tight Industrial External Reset	Component Starter (Open)
				Catalog Number	Catalog Number	Catalog Number	Catalog Number	Catalog Number
00	115 230	1/3 1	120 240	ECN08A1AAA ECN08A1BAA	(Select Contactor from Size 0 Listing)			AN16AN0AC AN16AN0BC
0	115 230	1 2	120 240	ECN0801AAA ECN0801BAA	ECN0802AAA ECN0802BAA	ECN0804AAA ECN0804BAA	ECN0808AAA ECN0808BAA	AN16BN0AC AN16BN0BC
1	115 230	2 3	120 240	ECN0811AAA ECN0811BAA	ECN0812AAA ECN0812BAA	ECN0814AAA ECN0814BAA	ECN0818AAA ECN0818BAA	AN16DN0AB AN16DN0BB
1P	115 230	3 5	120 240	ECN08C1AAA ECN08C1BAA	ECN08C2AAA ECN08C2BAA	ECN08C4AAA ECN08C4BAA	ECN08C8AAA ECN08C8BAA	AN16PN0A AN16PN0B
2	115 230	3 7-1/2	120 240	ECN0821AAA ECN0821BAA	ECN0822AAA ECN0822BAA	ECN0824AAA ECN0824BAA	ECN0828AAA ECN0828BAA	AN16GN0AB AN16GN0BB
3	115 230	7-1/2 15	120 240	ECN0831AAA ECN0831BAA	ECN0832AAA ECN0832BAA	ECN0834AAA ECN0834BAA	ECN0838AAA ECN0838BAA	AN16KN0A AN16KN0B

Starters do not include heater packs. Select 1 carton of 3 heater packs. For Heater Pack Selection, see **Page 16-6**.

① The Catalog Numbers listed in the Type 4X column are for Type 4X 304-Grade Stainless Steel, as indicated by the seventh digit **4**. Example: ECN0804AAA. To order Type 4X 316-Grade Stainless Steel, change that digit to **9**. To order Type 4 Painted Steel, change that digit to **3**. To order Nonmetallic, change that digit to **5**. For details on these Alternate Enclosures, see **Tab 14**.

Cover Control ..... **Page 3-21**
Other Magnet Coils ..... **Page 3-20**
Dimensions ..... **Page 15-2**
Accessories ..... **Page 16-4**
Modifications ..... **Page 16-40**
Technical Data ..... **Page 18-7**

Features

- 3-Phase Magnetic
- 3-Pole Non-reversing or Reversing
- Standard Interchangeable Heater OLR
- Optional Electronic Overload
- 600V Maximum
- 100,000 RMS Short Circuit Rating with Fuses

Product Selection

Table 3-31. Class ECN16 — Combination Non-reversing Starter — Fusible Disconnect

NEMA Size	Motor Voltage	Max. hp Rating Dual Element Fuses	Magnet Coil Voltage	Fuse Clip Amps	Type 1 General Purpose	Type 3R Rainproof	Type 4X ③ Watertight & Dust-Tight Stainless Steel	Type 12 Dust-Tight Industrial External Reset ①②	Component Starter (Open)
					Catalog Number	Catalog Number	Catalog Number	Catalog Number	Catalog Number
00	— 200 230 460 575	— 1-1/2 1-1/2 2 2	120 208 240 480 600	30A	ECN16A1AAB ECN16A1EAB ECN16A1BAB ECN16A1CAC ECN16A1DAC	ECN16A2AAB ECN16A2EAB ECN16A2BAB ECN16A2CAC ECN16A2DAC	ECN16A4AAB ECN16A4EAB ECN16A4BAB ECN16A4CAC ECN16A4DAC	ECN16A8AAB ECN16A8EAB ECN16A8BAB ECN16A8CAC ECN16A8DAC	AN16AN0AC AN16AN0EC AN16AN0BC AN16AN0CC AN16AN0DC
0	— 200 230 460 575	— 3 3 5 5	120 208 240 480 600	30A	ECN1601AAB ECN1601EAB ECN1601BAB ECN1601CAC ECN1601DAC	ECN1602AAB ECN1602EAB ECN1602BAB ECN1602CAC ECN1602DAC	ECN1604AAB ECN1604EAB ECN1604BAB ECN1604CAC ECN1604DAC	ECN1608AAB ECN1608EAB ECN1608BAB ECN1608CAC ECN1608DAC	AN16BN0AC AN16BN0EC AN16BN0BC AN16BN0CC AN16BN0DC
1	— 200 230 460 575	— 7-1/2 7-1/2 10 10	120 208 240 480 600	30A	ECN1611AAB ECN1611EAB ECN1611BAB ECN1611CAC ECN1611DAC	ECN1612AAB ECN1612EAB ECN1612BAB ECN1612CAC ECN1612DAC	ECN1614AAB ECN1614EAB ECN1614BAB ECN1614CAC ECN1614DAC	ECN1618AAB ECN1618EAB ECN1618BAB ECN1618CAC ECN1618DAC	AN16DN0AB AN16DN0EB AN16DN0BB AN16DN0CB AN16DN0DB
2	— 200 230 460 575	— 10 15 25 25	120 208 240 480 600	60A	ECN1621AAD ECN1621EAD ECN1621BAD ECN1621CAE ECN1621DAE	ECN1622AAD ECN1622EAD ECN1622BAD ECN1622CAE ECN1622DAE	ECN1624AAD ECN1624EAD ECN1624BAD ECN1624CAE ECN1624DAE	ECN1628AAD ECN1628EAD ECN1628BAD ECN1628CAE ECN1628DAE	AN16GN0AB AN16GN0EB AN16GN0BB AN16GN0CB AN16GN0DB
3	— 200 230 460 575	— 25 30 50 50	120 208 240 480 600	100A	ECN1631AAF ECN1631EAF ECN1631BAF ECN1631CAG ECN1631DAG	ECN1632AAF ECN1632EAF ECN1632BAF ECN1632CAG ECN1632DAG	ECN1634AAF ECN1634EAF ECN1634BAF ECN1634CAG ECN1634DAG	ECN1638AAF ECN1638EAF ECN1638BAF ECN1638CAG ECN1638DAG	AN16KN0A AN16KN0E AN16KN0B AN16KN0C AN16KN0D
4	— 200 230 460 575	— 40 50 100 100	120 208 240 480 600	200A	ECN1641AAH ECN1641EAH ECN1641BAH ECN1641CAJ ECN1641DAJ	ECN1642AAH ECN1642EAH ECN1642BAH ECN1642CAJ ECN1642DAJ	ECN1644AAH ECN1644EAH ECN1644BAH ECN1644CAJ ECN1644DAJ	ECN1648AAH ECN1648EAH ECN1648BAH ECN1648CAJ ECN1648DAJ	AN16NN0A AN16NN0E AN16NN0B AN16NN0C AN16NN0D

Starters do not include heater packs. Select 1 carton of 3 heater packs. For Heater Pack Selection, see **Page 16-6**.
Starters with Electronic Overload, see **Page 16-45** of Modification Codes.

① All Type 12 enclosures are standardized with external reset. For internal reset, order Mod Code **R5**.
② Type 12 enclosure is without safety door interlock. When safety door interlock is required, add modification **E11**.
③ The Catalog Numbers listed in the Type 4X column are for Type 4X 304-Grade Stainless Steel, as indicated by the seventh digit **4**. Example: ECN1604EAB. To order Type 4X 316-Grade Stainless Steel, change that digit to **9**. To order Type 4 Painted Steel, change that digit to **3**. To order Nonmetallic, change that digit to **5**. For details on these Alternate Enclosures, see **Tab 14**.

Cover Control ..... **Page 3-21**
Other Magnet Coils ..... **Page 3-20**
Dimensions ..... **Page 15-2**
Accessories ..... **Page 16-4**
Modifications ..... **Page 16-40**
Technical Data ..... **Page 18-7**

Table 3-31. Class ECN16 — Combination Non-reversing Starter — Fusible Disconnect (Continued)

NEMA Size	Motor Voltage	Max. hp Rating Dual Element Fuses	Magnet Coil Voltage	Fuse Clip Amps	Type 1 General Purpose	Type 3R Rainproof	Type 4X ⑥ Watertight & Dust-Tight Stainless Steel	Type 12 Dust-Tight Industrial External Reset ①②	Component Starter (Open)
					Catalog Number	Catalog Number	Catalog Number	Catalog Number	Catalog Number
5	—	—	120	400A	ECN1651AAK	ECN1652AAK	ECN1654AAK	ECN1658AAK	AN16SN0AB
	200	75	208		ECN1651EAK	ECN1652EAK	ECN1654EAK	ECN1658EAK	AN16SN0EB
	230	100	240		ECN1651BAK	ECN1652BAK	ECN1654BAK	ECN1658BAK	AN16SN0BB
	460	200	480		ECN1651CAL	ECN1652CAL	ECN1654CAL	ECN1658CAL	AN16SN0CB
	575	200	600		ECN1651DAL	ECN1652DAL	ECN1654DAL	ECN1658DAL	AN16SN0DB
6	—	—	120	600A	ECN1661AAM	ECN1662AAM	ECN1663AAM ③	ECN1668AAM	AN16TN0AB
	200	150	208		ECN1661EAM	ECN1662EAM	ECN1663EAM ③	ECN1668EAM	AN16TN0EB
	230	200	240		ECN1661BAM	ECN1662BAM	ECN1663BAM ③	ECN1668BAM	AN16TN0BB
	460	400	480		ECN1661CAN	ECN1662CAN	ECN1663CAN ③	ECN1668CAN	AN16TN0CB
	575	400	600		ECN1661DAN	ECN1662DAN	ECN1663DAN ③	ECN1668DAN	AN16TN0DB
7	—	—	120	⑤	ECN1671AAU	ECN1672AAU	ECN1673AAU ③	ECN1678AAU	AN16UN0AB
	230	300	240		ECN1671BAU	ECN1672BAU	ECN1673BAU ③	ECN1678BAU	AN16UN0BB
	460	600	480		ECN1671CAU	ECN1672CAU	ECN1673CAU ③	ECN1678CAU	AN16UN0CB
	575	600	600		ECN1671DAU	ECN1672DAU	ECN1673DAU ③	ECN1678DAU	AN16UN0DB
8	—	—	120	⑤	ECN1681AAU	ECN1682AAU	ECN1683AAU ③	ECN1688AAU	AN16VN0AB
	230	450	240		ECN1681BAU	ECN1682BAU	ECN1683BAU ③	ECN1688BAU	AN16VN0BB
	460	900	480		ECN1681CAU	ECN1682CAU	ECN1683CAU ③	ECN1688CAU	AN16VN0CB
	575	900	600		ECN1681DAU	ECN1682DAU	ECN1683DAU ③	ECN1688DAU	AN16VN0DB
9	—	—	120	⑤	ECN1691AAU	ECN1692AAU	ECN1693AAU ③	ECN1698AAU	AN16WN0A
	230	800	240		ECN1691BAU	ECN1692BAU	ECN1693BAU ③	ECN1698BAU	AN16WN0B
	460	1000 ④	480		ECN1691CAU	ECN1692CAU	ECN1693CAU ③	ECN1698CAU	AN16WN0C
	575	1000	600		ECN1691DAU	ECN1692DAU	ECN1693DAU ③	ECN1698DAU	AN16WN0D

Starters do not include heater packs. Select 1 carton of 3 heater packs. For Heater Pack Selection, see **Page 16-6**.
Starters with Electronic Overload, see **Page 16-45** of Modification Codes.

① All Type 12 enclosures are standardized with external reset. For internal reset, order Mod Code **R5**.
② Type 12 enclosure is without safety door interlock. When safety door interlock is required, add modification **E11**.
③ Type 4 (Painted steel) Sizes 6 – 9.
④ For 1250 and 1600 hp ratings at 460V, consult Eaton.
⑤ Supply hp, voltage, FLA and whether motor is design E or not when ordering the starter.
⑥ The Catalog Numbers listed in the Type 4X column are for Type 4X 304-Grade Stainless Steel, as indicated by the seventh digit **4**. Example: ECN1604EAB. To order Type 4X 316-Grade Stainless Steel, change that digit to **9**. To order Type 4 Painted Steel, change that digit to **3**. To order Nonmetallic, change that digit to **5**. For details on these Alternate Enclosures, see **Tab 14**.

Cover Control ..... **Page 3-21**
Other Magnet Coils ..... **Page 3-20**
Dimensions ..... **Page 15-2**
Accessories ..... **Page 16-4**
Modifications ..... **Page 16-40**
Technical Data ..... **Page 18-7**

Table 3-32. Class ECN16 — Combination Non-reversing Starter — Non-fusible Disconnect ③

NEMA Size	Motor Voltage	Max. hp Rating	Magnet Coil Voltage	Disconnect Amps	Type 1 General Purpose	Type 3R Rainproof	Type 4X ⑦ Watertight & Dust-Tight Stainless Steel	Type 12 Dust-Tight Industrial External Reset ① ②	Component Starter (Open)
					Catalog Number	Catalog Number	Catalog Number	Catalog Number	Catalog Number
00	—	—	120	30A	ECN16A1AAA	ECN16A2AAA	ECN16A4AAA	ECN16A8AAA	AN16AN0AC
	200	1-1/2	208		ECN16A1EAA	ECN16A2EAA	ECN16A4EAA	ECN16A8EAA	AN16AN0EC
	230	1-1/2	240		ECN16A1BAA	ECN16A2BAA	ECN16A4BAA	ECN16A8BAA	AN16AN0BC
	460	2	480		ECN16A1CAA	ECN16A2CAA	ECN16A4CAA	ECN16A8CAA	AN16AN0CC
	575	2	600		ECN16A1DAA	ECN16A2DAA	ECN16A4DAA	ECN16A8DAA	AN16AN0DC
0	—	—	120	30A	ECN1601AAA	ECN1602AAA	ECN1604AAA	ECN1608AAA	AN16BN0AC
	200	3	208		ECN1601EAA	ECN1602EAA	ECN1604EAA	ECN1608EAA	AN16BN0EC
	230	3	240		ECN1601BAA	ECN1602BAA	ECN1604BAA	ECN1608BAA	AN16BN0BC
	460	5	480		ECN1601CAA	ECN1602CAA	ECN1604CAA	ECN1608CAA	AN16BN0CC
	575	5	600		ECN1601DAA	ECN1602DAA	ECN1604DAA	ECN1608DAA	AN16BN0DC
1	—	—	120	30A	ECN1611AAA	ECN1612AAA	ECN1614AAA	ECN1618AAA	AN16DN0AB
	200	7-1/2	208		ECN1611EAA	ECN1612EAA	ECN1614EAA	ECN1618EAA	AN16DN0EB
	230	7-1/2	240		ECN1611BAA	ECN1612BAA	ECN1614BAA	ECN1618BAA	AN16DN0BB
	460	10	480		ECN1611CAA	ECN1612CAA	ECN1614CAA	ECN1618CAA	AN16DN0CB
	575	10	600		ECN1611DAA	ECN1612DAA	ECN1614DAA	ECN1618DAA	AN16DN0DB
2	—	—	120	60A	ECN1621AAA	ECN1622AAA	ECN1624AAA	ECN1628AAA	AN16GN0AB
	200	10	208		ECN1621EAA	ECN1622EAA	ECN1624EAA	ECN1628EAA	AN16GN0EB
	230	15	240		ECN1621BAA	ECN1622BAA	ECN1624BAA	ECN1628BAA	AN16GN0BB
	460	25	480		ECN1621CAA	ECN1622CAA	ECN1624CAA	ECN1628CAA	AN16GN0CB
	575	25	600		ECN1621DAA	ECN1622DAA	ECN1624DAA	ECN1628DAA	AN16GN0DB
3	—	—	120	100A	ECN1631AAA	ECN1632AAA	ECN1634AAA	ECN1638AAA	AN16KN0A
	200	25	208		ECN1631EAA	ECN1632EAA	ECN1634EAA	ECN1638EAA	AN16KN0E
	230	30	240		ECN1631BAA	ECN1632BAA	ECN1634BAA	ECN1638BAA	AN16KN0B
	460	50	480		ECN1631CAA	ECN1632CAA	ECN1634CAA	ECN1638CAA	AN16KN0C
	575	50	600		ECN1631DAA	ECN1632DAA	ECN1634DAA	ECN1638DAA	AN16KN0D
4	—	—	120	200A	ECN1641AAA	ECN1642AAA	ECN1644AAA	ECN1648AAA	AN16NN0A
	200	40	208		ECN1641EAA	ECN1642EAA	ECN1644EAA	ECN1648EAA	AN16NN0E
	230	50	240		ECN1641BAA	ECN1642BAA	ECN1644BAA	ECN1648BAA	AN16NN0B
	460	100	480		ECN1641CAA	ECN1642CAA	ECN1644CAA	ECN1648CAA	AN16NN0C
	575	100	600		ECN1641DAA	ECN1642DAA	ECN1644DAA	ECN1648DAA	AN16NN0D
5	—	—	120	400A	ECN1651AAA	ECN1652AAA	ECN1654AAA	ECN1658AAA	AN16SN0AB
	200	75	208		ECN1651EAA	ECN1652EAA	ECN1654EAA	ECN1658EAA	AN16SN0EB
	230	100	240		ECN1651BAA	ECN1652BAA	ECN1654BAA	ECN1658BAA	AN16SN0BB
	460	200	480		ECN1651CAA	ECN1652CAA	ECN1654CAA	ECN1658CAA	AN16SN0CB
	575	200	600		ECN1651DAA	ECN1652DAA	ECN1654DAA	ECN1658DAA	AN16SN0DB
6	—	—	120	600A	ECN1661AAA	ECN1662AAA	ECN1663AAA ④	ECN1668AAA	AN16TN0AB
	200	150	208		ECN1661EAA	ECN1662EAA	ECN1663EAA ④	ECN1668EAA	AN16TN0EB
	230	200	240		ECN1661BAA	ECN1662BAA	ECN1663BAA ④	ECN1668BAA	AN16TN0BB
	460	400	480		ECN1661CAA	ECN1662CAA	ECN1663CAA ④	ECN1668CAA	AN16TN0CB
	575	400	600		ECN1661DAA	ECN1662DAA	ECN1663DAA ④	ECN1668DAA	AN16TN0DB
7	—	—	120	⑥	ECN1671AAA	ECN1672AAA	ECN1673AAA ④	ECN1678AAA	AN16UN0AB
	230	300	240		ECN1671BAA	ECN1672BAA	ECN1673BAA ④	ECN1678BAA	AN16UN0BB
	460	600	480		ECN1671CAA	ECN1672CAA	ECN1673CAA ④	ECN1678CAA	AN16UN0CB
	575	600	600		ECN1671DAA	ECN1672DAA	ECN1673DAA ④	ECN1678DAA	AN16UN0DB
8	—	—	120	⑥	ECN1681AAA	ECN1682AAA	ECN1683AAA ④	ECN1688AAA	AN16VN0AB
	230	450	240		ECN1681BAA	ECN1682BAA	ECN1683BAA ④	ECN1688BAA	AN16VN0BB
	460	900	480		ECN1681CAA	ECN1682CAA	ECN1683CAA ④	ECN1688CAA	AN16VN0CB
	575	900	600		ECN1681DAA	ECN1682DAA	ECN1683DAA ④	ECN1688DAA	AN16VN0DB
9	—	—	120	⑥	ECN1691AAA	ECN1692AAA	ECN1693AAA ④	ECN1698AAA	AN16WN0A
	230	800	240		ECN1691BAA	ECN1692BAA	ECN1693BAA ④	ECN1698BAA	AN16WN0B
	460	1000 ⑤	480		ECN1691CAA	ECN1692CAA	ECN1693CAA ④	ECN1698CAA	AN16WN0C
	575	1000	600		ECN1691DAA	ECN1692DAA	ECN1693DAA ④	ECN1698DAA	AN16WN0D

Starters do not include heater packs. Select 1 carton of 3 heater packs. For Heater Pack Selection, see **Page 16-6**.
Starters with Electronic Overload, see **Page 16-45** of Modification Codes.

① All Type 12 enclosures are standardized with external reset. For internal reset, order Mod Code **R5**.
② Type 12 enclosure is without safety door interlock. When safety door interlock is required, add modification **E11**.
③ Field installed Fuse Clips available, see **Page 16-12**.
④ Type 4 (Painted steel) Sizes 6 – 9.
⑤ For 1250 and 1600 hp ratings at 460V, consult Eaton.
⑥ Supply hp, voltage, FLA and whether motor is design E or not when ordering the starter.
⑦ The Catalog Numbers listed in the Type 4X column are for Type 4X 304-Grade Stainless Steel, as indicated by the seventh digit **4**. Example: ECN1604AAA. To order Type 4X 316-Grade Stainless Steel, change that digit to **9**. To order Type 4 Painted Steel, change that digit to **3**. To order Nonmetallic, change that digit to **5**. For details on these Alternate Enclosures, see **Tab 14**.

Cover Control ..... **Page 3-21**
Other Magnet Coils ..... **Page 3-20**
Dimensions ..... **Page 15-2**
Accessories ..... **Page 16-4**
Modifications ..... **Page 16-40**
Technical Data ..... **Page 18-7**

Table 3-33. Class ECN16 — Special Enclosure Combination Non-reversing Starter — Fusible/Non-fusible Disconnect

NEMA Size	Motor Voltage	Maximum hp Rating	Magnet Coil Voltage	Fuse Clip Amperes ①	Type 1 General Purpose	Type 4X ③ Watertight & Dust-Tight Stainless Steel	Type 12 Dust-Tight Industrial ②		Component Starter (Open)
					External Reset	External Reset	External Reset	Internal Reset	
					Catalog Number	Catalog Number	Catalog Number	Catalog Number	Catalog Number
Horizontal Enclosure — Fusible									
1	—	—	120	30A	ECN1611AAB-E13	—	ECN1618AAB-E13	ECN1618AAB-E13R5	AN16DN0AB
	200	7-1/2	208		ECN1611EAB-E13	—	ECN1618EAB-E13	ECN1618EAB-E13R5	AN16DN0EB
	230	7-1/2	240		ECN1611BAB-E13	—	ECN1618BAB-E13	ECN1618BAB-E13R5	AN16DN0BB
	460	10	480		ECN1611CAC-E13	—	ECN1618CAC-E13	ECN1618CAC-E13R5	AN16DN0CB
	575	10	600		ECN1611DAC-E13	—	ECN1618DAC-E13	ECN1618DAC-E13R5	AN16DN0DB
2	—	—	120	60A	ECN1621AAD-E13	—	ECN1628AAD-E13	ECN1628AAD-E13R5	AN16GN0AB
	200	10	208		ECN1621EAD-E13	—	ECN1628EAD-E13	ECN1628EAD-E13R5	AN16GN0EB
	230	15	240		ECN1621BAD-E13	—	ECN1628BAD-E13	ECN1628BAD-E13R5	AN16GN0BB
	460	25	480		ECN1621CAE-E13	—	ECN1628CAE-E13	ECN1628CAE-E13R5	AN16GN0CB
	575	25	600		ECN1621DAE-E13	—	ECN1628DAE-E13	ECN1628DAE-E13R5	AN16GN0DB
Horizontal Enclosure — Non-fusible									
1	—	—	120	—	ECN1611AAA-E13	—	ECN1618AAA-E13	ECN1618AAA-E13R5	AN16DN0AB
	200	7-1/2	208		ECN1611EAA-E13	—	ECN1618EAA-E13	ECN1618EAA-E13R5	AN16DN0EB
	230	7-1/2	240		ECN1611BAA-E13	—	ECN1618BAA-E13	ECN1618BAA-E13R5	AN16DN0BB
	460	10	480		ECN1611CAA-E13	—	ECN1618CAA-E13	ECN1618CAA-E13R5	AN16DN0CB
	575	10	600		ECN1611DAA-E13	—	ECN1618DAA-E13	ECN1618DAA-E13R5	AN16DN0DB
2	—	—	120	—	ECN1621AAA-E13	—	ECN1628AAA-E13	ECN1628AAA-E13R5	AN16GN0AB
	200	10	208		ECN1621EAA-E13	—	ECN1628EAA-E13	ECN1628EAA-E13R5	AN16GN0EB
	230	15	240		ECN1621BAA-E13	—	ECN1628BAA-E13	ECN1628BAA-E13R5	AN16GN0BB
	460	25	480		ECN1621CAA-E13	—	ECN1628CAA-E13	ECN1628CAA-E13R5	AN16GN0CB
	575	25	600		ECN1621DAA-E13	—	ECN1628DAA-E13	ECN1628DAA-E13R5	AN16GN0DB
Oversize Enclosure — without Control Transformer — Fusible									
0	—	—	120	30A	ECN1601AAB-E3	ECN1604AAB-E3	ECN1608AAB-E3	ECN1608AAB-E3R5	AN16BN0AC
	200	3	208		ECN1601EAB-E3	ECN1604EAB-E3	ECN1608EAB-E3	ECN1608EAB-E3R5	AN16BN0EC
	230	3	240		ECN1601BAB-E3	ECN1604BAB-E3	ECN1608BAB-E3	ECN1608BAB-E3R5	AN16BN0BC
	460	5	480		ECN1601CAC-E3	ECN1604CAC-E3	ECN1608CAC-E3	ECN1608CAC-E3R5	AN16BN0CC
	575	5	600		ECN1601DAC-E3	ECN1604DAC-E3	ECN1608DAC-E3	ECN1608DAC-E3R5	AN16BN0DC
1	—	—	120	30A	ECN1611AAB-E3	ECN1614AAB-E3	ECN1618AAB-E3	ECN1618AAB-E3R5	AN16DN0AB
	200	7-1/2	208		ECN1611EAB-E3	ECN1614EAB-E3	ECN1618EAB-E3	ECN1618EAB-E3R5	AN16DN0EB
	230	7-1/2	240		ECN1611BAB-E3	ECN1614BAB-E3	ECN1618BAB-E3	ECN1618BAB-E3R5	AN16DN0BB
	460	10	480		ECN1611CAC-E3	ECN1614CAC-E3	ECN1618CAC-E3	ECN1618CAC-E3R5	AN16DN0CB
	575	10	600		ECN1611DAC-E3	ECN1614DAC-E3	ECN1618DAC-E3	ECN1618DAC-E3R5	AN16DN0DB
2	—	—	120	60A	ECN1621AAD-E3	ECN1624AAD-E3	ECN1628AAD-E3	ECN1628AAD-E3R5	AN16GN0AB
	200	10	208		ECN1621EAD-E3	ECN1624EAD-E3	ECN1628EAD-E3	ECN1628EAD-E3R5	AN16GN0EB
	230	15	240		ECN1621BAD-E3	ECN1624BAD-E3	ECN1628BAD-E3	ECN1628BAD-E3R5	AN16GN0BB
	460	25	480		ECN1621CAE-E3	ECN1624CAE-E3	ECN1628CAE-E3	ECN1628CAE-E3R5	AN16GN0CB
	575	25	600		ECN1621DAE-E3	ECN1624DAE-E3	ECN1628DAE-E3	ECN1628DAE-E3R5	AN16GN0DB
Oversize Enclosure — without Control Transformer — Non-fusible									
0	—	—	120	—	ECN1601AAA-E3	ECN1604AAA-E3	ECN1608AAA-E3	ECN1608AAA-E3R5	AN16BN0AC
	200	3	208		ECN1601EAA-E3	ECN1604EAA-E3	ECN1608EAA-E3	ECN1608EAA-E3R5	AN16BN0EC
	230	3	240		ECN1601BAA-E3	ECN1604BAA-E3	ECN1608BAA-E3	ECN1608BAA-E3R5	AN16BN0BC
	460	5	480		ECN1601CAA-E3	ECN1604CAA-E3	ECN1608CAA-E3	ECN1608CAA-E3R5	AN16BN0CC
	575	5	600		ECN1601DAA-E3	ECN1604DAA-E3	ECN1608DAA-E3	ECN1608DAA-E3R5	AN16BN0DC
1	—	—	120	—	ECN1611AAA-E3	ECN1614AAA-E3	ECN1618AAA-E3	ECN1618AAA-E3R5	AN16DN0AB
	200	7-1/2	208		ECN1611EAA-E3	ECN1614EAA-E3	ECN1618EAA-E3	ECN1618EAA-E3R5	AN16DN0EB
	230	7-1/2	240		ECN1611BAA-E3	ECN1614BAA-E3	ECN1618BAA-E3	ECN1618BAA-E3R5	AN16DN0BB
	460	10	480		ECN1611CAA-E3	ECN1614CAA-E3	ECN1618CAA-E3	ECN1618CAA-E3R5	AN16DN0CB
	575	10	600		ECN1611DAA-E3	ECN1614DAA-E3	ECN1618DAA-E3	ECN1618DAA-E3R5	AN16DN0DB
2	—	—	120	—	ECN1621AAA-E3	ECN1624AAA-E3	ECN1628AAA-E3	ECN1628AAA-E3R5	AN16GN0AB
	200	10	208		ECN1621EAA-E3	ECN1624EAA-E3	ECN1628EAA-E3	ECN1628EAA-E3R5	AN16GN0EB
	230	15	240		ECN1621BAA-E3	ECN1624BAA-E3	ECN1628BAA-E3	ECN1628BAA-E3R5	AN16GN0BB
	460	25	480		ECN1621CAA-E3	ECN1624CAA-E3	ECN1628CAA-E3	ECN1628CAA-E3R5	AN16GN0CB
	575	25	600		ECN1621DAA-E3	ECN1624DAA-E3	ECN1628DAA-E3	ECN1628DAA-E3R5	AN16GN0DB

Starters do not include heater packs. Select 1 carton of 3 heater packs. For Heater Pack Selection, see **Page 16-6**.
Starters with Electronic Overload, see **Page 16-45** of Modification Codes.

① Fuse clips are for Class R fuses only. For H and J fuses see mods, **Page 16-42**.
② To order Type 12 enclosures with safety door interlock add modification **E11**.
③ The Catalog Numbers listed in the Type 4X column are for Type 4X 304-Grade Stainless Steel, as indicated by the seventh digit **4**. Example: ECN1604EAB-E3. To order Type 4X 316-Grade Stainless Steel, change that digit to **9**. To order Type 4 Painted Steel, change that digit to **3**. To order Nonmetallic, change that digit to **5**. For details on these Alternate Enclosures, see **Tab 14**.

Cover Control ..... **Page 3-21**
Other Magnet Coils ..... **Page 3-20**
Dimensions ..... **Page 15-2**
Accessories ..... **Page 16-4**
Modifications ..... **Page 16-40**
Technical Data ..... **Page 18-7**

Table 3-34. Class ECN17 — Combination Reversing Starter — Fusible Disconnect

NEMA Size	Motor Voltage	Max. hp Rating Dual Element Fuses	Magnet Coil Voltage	Fuse Clip Amps	Type 1 General Purpose	Type 3R Rainproof	Type 4X ⑥ Watertight & Dust-Tight Stainless Steel	Type 12 Dust-Tight Industrial External Reset ①②	Component Starter (Open)
					Catalog Number	Catalog Number	Catalog Number	Catalog Number	Catalog Number
0	—	—	120	30A	ECN1701AAB	ECN1702AAB	ECN1704AAB	ECN1708AAB	AN56BN0AC
	200	3	208		ECN1701EAB	ECN1702EAB	ECN1704EAB	ECN1708EAB	AN56BN0EC
	230	3	240		ECN1701BAB	ECN1702BAB	ECN1704BAB	ECN1708BAB	AN56BN0BC
	460	5	480		ECN1701CAC	ECN1702CAC	ECN1704CAC	ECN1708CAC	AN56BN0CC
	575	5	600		ECN1701DAC	ECN1702DAC	ECN1704DAC	ECN1708DAC	AN56BN0DC
1	—	—	120	30A	ECN1711AAB	ECN1712AAB	ECN1714AAB	ECN1718AAB	AN56DN0AB
	200	7-1/2	208		ECN1711EAB	ECN1712EAB	ECN1714EAB	ECN1718EAB	AN56DN0EB
	230	7-1/2	240		ECN1711BAB	ECN1712BAB	ECN1714BAB	ECN1718BAB	AN56DN0BB
	460	10	480		ECN1711CAC	ECN1712CAC	ECN1714CAC	ECN1718CAC	AN56DN0CB
	575	10	600		ECN1711DAC	ECN1712DAC	ECN1714DAC	ECN1718DAC	AN56DN0DB
2	—	—	120	60A	ECN1721AAD	ECN1722AAD	ECN1724AAD	ECN1728AAD	AN56GN0AB
	200	10	208		ECN1721EAD	ECN1722EAD	ECN1724EAD	ECN1728EAD	AN56GN0EB
	230	15	240		ECN1721BAD	ECN1722BAD	ECN1724BAD	ECN1728BAD	AN56GN0BB
	460	25	480		ECN1721CAE	ECN1722CAE	ECN1724CAE	ECN1728CAE	AN56GN0CB
	575	25	600		ECN1721DAE	ECN1722DAE	ECN1724DAE	ECN1728DAE	AN56GN0DB
3	—	—	120	100A	ECN1731AAF	ECN1732AAF	ECN1734AAF	ECN1738AAF	AN56KN0A
	200	25	208		ECN1731EAF	ECN1732EAF	ECN1734EAF	ECN1738EAF	AN56KN0E
	230	30	240		ECN1731BAF	ECN1732BAF	ECN1734BAF	ECN1738BAF	AN56KN0B
	460	50	480		ECN1731CAG	ECN1732CAG	ECN1734CAG	ECN1738CAG	AN56KN0C
	575	50	600		ECN1731DAG	ECN1732DAG	ECN1734DAG	ECN1738DAG	AN56KN0D
4	—	—	120	200A	ECN1741AAH	ECN1742AAH	ECN1744AAH	ECN1748AAH	AN56NN0A
	200	40	208		ECN1741EAH	ECN1742EAH	ECN1744EAH	ECN1748EAH	AN56NN0E
	230	50	240		ECN1741BAH	ECN1742BAH	ECN1744BAH	ECN1748BAH	AN56NN0B
	460	100	480		ECN1741CAJ	ECN1742CAJ	ECN1744CAJ	ECN1748CAJ	AN56NN0C
	575	100	600		ECN1741DAJ	ECN1742DAJ	ECN1744DAJ	ECN1748DAJ	AN56NN0D
5	—	—	120	400A	ECN1751AAK	ECN1752AAK	ECN1754AAK	ECN1758AAK	AN56SN0AB
	200	75	208		ECN1751EAK	ECN1752EAK	ECN1754EAK	ECN1758EAK	AN56SN0EB
	230	100	240		ECN1751BAK	ECN1752BAK	ECN1754BAK	ECN1758BAK	AN56SN0BB
	460	200	480		ECN1751CAL	ECN1752CAL	ECN1754CAL	ECN1758CAL	AN56SN0CB
	575	200	600		ECN1751DAL	ECN1752DAL	ECN1754DAL	ECN1758DAL	AN56SN0DB
6	—	—	120	600A	ECN1761AAM	ECN1762AAM	ECN1763AAM ③	ECN1768AAM	AN56TN0AB
	200	150	208		ECN1761EAM	ECN1762EAM	ECN1763EAM ③	ECN1768EAM	AN56TN0EB
	230	200	240		ECN1761BAM	ECN1762BAM	ECN1763BAM ③	ECN1768BAM	AN56TN0BB
	460	400	480		ECN1761CAN	ECN1762CAN	ECN1763CAN ③	ECN1768CAN	AN56TN0CB
	575	400	600		ECN1761DAN	ECN1762DAN	ECN1763DAN ③	ECN1768DAN	AN56TN0DB
7	—	—	120	⑤	ECN1771AAU	ECN1772AAU	ECN1773AAU ③	ECN1778AAU	AN56UN0AB
	230	300	240		ECN1771BAU	ECN1772BAU	ECN1773BAU ③	ECN1778BAU	AN56UN0BB
	460	600	480		ECN1771CAU	ECN1772CAU	ECN1773CAU ③	ECN1778CAU	AN56UN0CB
	575	600	600		ECN1771DAU	ECN1772DAU	ECN1773DAU ③	ECN1778DAU	AN56UN0DB
8	—	—	120	⑤	ECN1781AAU	ECN1782AAU	ECN1783AAU ③	ECN1788AAU	AN56VN0AB
	230	450	240		ECN1781BAU	ECN1782BAU	ECN1783BAU ③	ECN1788BAU	AN56VN0BB
	460	900	480		ECN1781CAU	ECN1782CAU	ECN1783CAU ③	ECN1788CAU	AN56VN0CB
	575	900	600		ECN1781DAU	ECN1782DAU	ECN1783DAU ③	ECN1788DAU	AN56VN0DB
9	—	—	120	⑤	ECN1791AAU	ECN1792AAU	ECN1793AAU ③	ECN1798AAU	AN56WN0A
	230	800	240		ECN1791BAU	ECN1792BAU	ECN1793BAU ③	ECN1798BAU	AN56WN0B
	460	1000 ④	480		ECN1791CAU	ECN1792CAU	ECN1793CAU ③	ECN1798CAU	AN56WN0C
	575	1000	600		ECN1791DAU	ECN1792DAU	ECN1793DAU ③	ECN1798DAU	AN56WN0D

Starters do not include heater packs. Select 1 carton of 3 heater packs. For Heater Pack Selection, see **Page 16-6**.
Starters with Electronic Overload, see **Page 16-45** of Modification Codes.

① All Type 12 enclosures are standardized with external reset. For internal reset, order Mod Code **R5**.
② Type 12 enclosure is without safety door interlock. When safety door interlock is required, add modification **E11**.
③ Type 4 (Painted steel) Sizes 6 – 9.
④ For 1250 and 1600 hp ratings at 460V, consult Eaton.
⑤ Supply hp, voltage, FLA and whether motor is design E or not when ordering the starter.
⑥ The Catalog Numbers listed in the Type 4X column are for Type 4X 304-Grade Stainless Steel, as indicated by the seventh digit **4**. Example: ECN1704EAB. To order Type 4X 316-Grade Stainless Steel, change that digit to **9**. To order Type 4 Painted Steel, change that digit to **3**. To order Nonmetallic, change that digit to **5**. For details on these Alternate Enclosures, see **Tab 14**.

Cover Control ..... **Page 3-21**
Other Magnet Coils ..... **Page 3-20**
Dimensions ..... **Page 15-2**
Accessories ..... **Page 16-4**
Modifications ..... **Page 16-40**
Technical Data ..... **Page 18-7**

Table 3-35. Class ECN17 — Combination Reversing Starter — Non-fusible Disconnect

NEMA Size	Motor Voltage	Max. hp Rating	Magnet Coil Voltage	Disconnect Amps	Type 1 General Purpose	Type 3R Rainproof	Type 4X ⑥ Watertight & Dust-Tight Stainless Steel	Type 12 Dust-Tight Industrial External Reset ①②	Component Starter (Open)
					Catalog Number	Catalog Number	Catalog Number	Catalog Number	Catalog Number
0	—	—	120	30A	ECN1701AAA	ECN1702AAA	ECN1704AAA	ECN1708AAA	AN56BN0AC
	200	3	208		ECN1701EAA	ECN1702EAA	ECN1704EAA	ECN1708EAA	AN56BN0EC
	230	3	240		ECN1701BAA	ECN1702BAA	ECN1704BAA	ECN1708BAA	AN56BN0BC
	460	5	480		ECN1701CAA	ECN1702CAA	ECN1704CAA	ECN1708CAA	AN56BN0CC
	575	5	600		ECN1701DAA	ECN1702DAA	ECN1704DAA	ECN1708DAA	AN56BN0DC
1	—	—	120	30A	ECN1711AAA	ECN1712AAA	ECN1714AAA	ECN1718AAA	AN56DN0AB
	200	7-1/2	208		ECN1711EAA	ECN1712EAA	ECN1714EAA	ECN1718EAA	AN56DN0EB
	230	7-1/2	240		ECN1711BAA	ECN1712BAA	ECN1714BAA	ECN1718BAA	AN56DN0BB
	460	10	480		ECN1711CAA	ECN1712CAA	ECN1714CAA	ECN1718CAA	AN56DN0CB
	575	10	600		ECN1711DAA	ECN1712DAA	ECN1714DAA	ECN1718DAA	AN56DN0DB
2	—	—	120	60A	ECN1721AAA	ECN1722AAA	ECN1724AAA	ECN1728AAA	AN56GN0AB
	200	10	208		ECN1721EAA	ECN1722EAA	ECN1724EAA	ECN1728EAA	AN56GN0EB
	230	15	240		ECN1721BAA	ECN1722BAA	ECN1724BAA	ECN1728BAA	AN56GN0BB
	460	25	480		ECN1721CAA	ECN1722CAA	ECN1724CAA	ECN1728CAA	AN56GN0CB
	575	25	600		ECN1721DAA	ECN1722DAA	ECN1724DAA	ECN1728DAA	AN56GN0DB
3	—	—	120	100A	ECN1731AAA	ECN1732AAA	ECN1734AAA	ECN1738AAA	AN56KN0A
	200	25	208		ECN1731EAA	ECN1732EAA	ECN1734EAA	ECN1738EAA	AN56KN0E
	230	30	240		ECN1731BAA	ECN1732BAA	ECN1734BAA	ECN1738BAA	AN56KN0B
	460	50	480		ECN1731CAA	ECN1732CAA	ECN1734CAA	ECN1738CAA	AN56KN0C
	575	50	600		ECN1731DAA	ECN1732DAA	ECN1734DAA	ECN1738DAA	AN56KN0D
4	—	—	120	200A	ECN1741AAA	ECN1742AAA	ECN1744AAA	ECN1748AAA	AN56NN0A
	200	40	208		ECN1741EAA	ECN1742EAA	ECN1744EAA	ECN1748EAA	AN56NN0E
	230	50	240		ECN1741BAA	ECN1742BAA	ECN1744BAA	ECN1748BAA	AN56NN0B
	460	100	480		ECN1741CAA	ECN1742CAA	ECN1744CAA	ECN1748CAA	AN56NN0C
	575	100	600		ECN1741DAA	ECN1742DAA	ECN1744DAA	ECN1748DAA	AN56NN0D
5	—	—	120	400A	ECN1751AAA	ECN1752AAA	ECN1754AAA	ECN1758AAA	AN56SN0AB
	200	75	208		ECN1751EAA	ECN1752EAA	ECN1754EAA	ECN1758EAA	AN56SN0EB
	230	100	240		ECN1751BAA	ECN1752BAA	ECN1754BAA	ECN1758BAA	AN56SN0BB
	460	200	480		ECN1751CAA	ECN1752CAA	ECN1754CAA	ECN1758CAA	AN56SN0CB
	575	200	600		ECN1751DAA	ECN1752DAA	ECN1754DAA	ECN1758DAA	AN56SN0DB
6	—	—	120	600A	ECN1761AAA	ECN1762AAA	ECN1763AAA ③	ECN1768AAA	AN56TN0AB
	200	150	208		ECN1761EAA	ECN1762EAA	ECN1763EAA ③	ECN1768EAA	AN56TN0EB
	230	200	240		ECN1761BAA	ECN1762BAA	ECN1763BAA ③	ECN1768BAA	AN56TN0BB
	460	400	480		ECN1761CAA	ECN1762CAA	ECN1763CAA ③	ECN1768CAA	AN56TN0CB
	575	400	600		ECN1761DAA	ECN1762DAA	ECN1763DAA ③	ECN1768DAA	AN56TN0DB
7	—	—	120	⑤	ECN1771AAA	ECN1772AAA	ECN1773AAA ③	ECN1778AAA	AN56UN0AB
	230	300	240		ECN1771BAA	ECN1772BAA	ECN1773BAA ③	ECN1778BAA	AN56UN0BB
	460	600	480		ECN1771CAA	ECN1772CAA	ECN1773CAA ③	ECN1778CAA	AN56UN0CB
	575	600	600		ECN1771DAA	ECN1772DAA	ECN1773DAA ③	ECN1778DAA	AN56UN0DB
8	—	—	120	⑤	ECN1781AAA	ECN1782AAA	ECN1783AAA ③	ECN1788AAA	AN56VN0AB
	230	450	240		ECN1781BAA	ECN1782BAA	ECN1783BAA ③	ECN1788BAA	AN56VN0BB
	460	900	480		ECN1781CAA	ECN1782CAA	ECN1783CAA ③	ECN1788CAA	AN56VN0CB
	575	900	600		ECN1781DAA	ECN1782DAA	ECN1783DAA ③	ECN1788DAA	AN56VN0DB
9	—	—	120	⑤	ECN1791AAA	ECN1792AAA	ECN1793AAA ③	ECN1798AAA	AN56WN0A
	230	800	240		ECN1791BAA	ECN1792BAA	ECN1793BAA ③	ECN1798BAA	AN56WN0B
	460	1000 ④	480		ECN1791CAA	ECN1792CAA	ECN1793CAA ③	ECN1798CAA	AN56WN0C
	575	1000	600		ECN1791DAA	ECN1792DAA	ECN1793DAA ③	ECN1798DAA	AN56WN0D

Starters do not include heater packs. Select 1 carton of 3 heater packs. For Heater Pack Selection, see **Page 16-6**.
Starters with Electronic Overload, see **Page 16-45** of Modification Codes.

① All Type 12 enclosures are standardized with external reset. For internal reset, order Mod Code **R5**.
② Type 12 enclosure is without safety door interlock. When safety door interlock is required, add modification **E11**.
③ Type 4 (Painted steel) Sizes 6 – 9.
④ For 1250 and 1600 hp ratings at 460V, consult Eaton.
⑤ Supply hp, voltage, FLA and whether motor is design E or not when ordering the starter.
⑥ The Catalog Numbers listed in the Type 4X column are for Type 4X 304-Grade Stainless Steel, as indicated by the seventh digit **4**. Example: ECN1704AAA. To order Type 4X 316-Grade Stainless Steel, change that digit to **9**. To order Type 4 Painted Steel, change that digit to **3**. To order Nonmetallic, change that digit to **5**. For details on these Alternate Enclosures, see **Tab 14**.

Cover Control ..... **Page 3-21**
Other Magnet Coils ..... **Page 3-20**
Dimensions ..... **Page 15-2**
Accessories ..... **Page 16-4**
Modifications ..... **Page 16-40**
Technical Data ..... **Page 18-7**

Table 3-36. Class ECN18 — Combination Reversing Starter — Fusible Disconnect with CPT ⑥

NEMA Size	Primary Voltage ①	Max. hp Rating	Magnet Coil Voltage	Fuse Clip Amps	Type 1 General Purpose	Type 3R Rainproof	Type 4X Watertight & Dust-Tight Stainless Steel ⑨	Type 12 Dust-Tight Industrial External Reset ②③	Component Starter (Open)
					Catalog Number	Catalog Number	Catalog Number	Catalog Number	Catalog Number
00	208	1-1/2	120	30A ④	ECN18A1EAB	ECN18A2EAB	ECN18A4EAB	ECN18A8EAB	AN16AN0EC
	240	1-1/2			ECN18A1BAB	ECN18A2BAB	ECN18A4BAB	ECN18A8BAB	AN16AN0BC
	480	2			ECN18A1CAC	ECN18A2CAC	ECN18A4CAC	ECN18A8CAC	AN16AN0CC
	600	2			ECN18A1DAC	ECN18A2DAC	ECN18A4DAC	ECN18A8DAC	AN16AN0DC
0	208	3	120	30A ④	ECN1801EAB	ECN1802EAB	ECN1804EAB	ECN1808EAB	AN16BN0EC
	240	3			ECN1801BAB	ECN1802BAB	ECN1804BAB	ECN1808BAB	AN16BN0BC
	480	5			ECN1801CAC	ECN1802CAC	ECN1804CAC	ECN1808CAC	AN16BN0CC
	600	5			ECN1801DAC	ECN1802DAC	ECN1804DAC	ECN1808DAC	AN16BN0DC
1	208	7-1/2	120	30A ④	ECN1811EAB	ECN1812EAB	ECN1814EAB	ECN1818EAB	AN16DN0EB
	240	7-1/2			ECN1811BAB	ECN1812BAB	ECN1814BAB	ECN1818BAB	AN16DN0BB
	480	10			ECN1811CAC	ECN1812CAC	ECN1814CAC	ECN1818CAC	AN16DN0CB
	600	10			ECN1811DAC	ECN1812DAC	ECN1814DAC	ECN1818DAC	AN16DN0DB
2	208	10	120	60A ④	ECN1821EAD	ECN1822EAD	ECN1824EAD	ECN1828EAD	AN16GN0EB
	240	15			ECN1821BAD	ECN1822BAD	ECN1824BAD	ECN1828BAD	AN16GN0BB
	480	25			ECN1821CAE	ECN1822CAE	ECN1824CAE	ECN1828CAE	AN16GN0CB
	600	25			ECN1821DAE	ECN1822DAE	ECN1824DAE	ECN1828DAE	AN16GN0DB
3	208	25	120	100A	ECN1831EAF	ECN1832EAF	ECN1834EAF	ECN1838EAF	AN16KN0E
	240	30			ECN1831BAF	ECN1832BAF	ECN1834BAF	ECN1838BAF	AN16KN0B
	480	50			ECN1831CAG	ECN1832CAG	ECN1834CAG	ECN1838CAG	AN16KN0C
	600	50			ECN1831DAG	ECN1832DAG	ECN1834DAG	ECN1838DAG	AN16KN0D
4	208	40	120	200A	ECN1841EAH	ECN1842EAH	ECN1844EAH	ECN1848EAH	AN16NN0E
	240	50			ECN1841BAH	ECN1842BAH	ECN1844BAH	ECN1848BAH	AN16NN0B
	480	100			ECN1841CAJ	ECN1842CAJ	ECN1844CAJ	ECN1848CAJ	AN16NN0C
	600	100			ECN1841DAJ	ECN1842DAJ	ECN1844DAJ	ECN1848DAJ	AN16NN0D
5	208	75	120	400A	ECN1851EAK	ECN1852EAK	ECN1854EAK	ECN1858EAK	AN16SN0EB
	240	100			ECN1851BAK	ECN1852BAK	ECN1854BAK	ECN1858BAK	AN16SN0BB
	480	200			ECN1851CAL	ECN1852CAL	ECN1854CAL	ECN1858CAL	AN16SN0CB
	600	200			ECN1851DAL	ECN1852DAL	ECN1854DAL	ECN1858DAL	AN16SN0DB
6	208	150	120	600A	ECN1861EAM	ECN1862EAM	ECN1863EAM ⑤	ECN1868EAM	AN16TN0EB
	240	200			ECN1861BAM	ECN1862BAM	ECN1863BAM ⑤	ECN1868BAM	AN16TN0BB
	480	400			ECN1861CAN	ECN1862CAN	ECN1863CAN ⑤	ECN1868CAN	AN16TN0CB
	600	400			ECN1861DAN	ECN1862DAN	ECN1863DAN ⑤	ECN1868DAN	AN16TN0DB
7	240	300	120	⑦	ECN1871BAU	ECN1872BAU	ECN1873BAU ⑤	ECN1878BAU	AN16UN0BB
	480	600			ECN1871CAU	ECN1872CAU	ECN1873CAU ⑤	ECN1878CAU	AN16UN0CB
	600	600			ECN1871DAU	ECN1872DAU	ECN1873DAU ⑤	ECN1878DAU	AN16UN0DB
8	240	450	120	⑦	ECN1881BAU	ECN1882BAU	ECN1883BAU ⑤	ECN1888BAU	AN16VN0BB
	480	900			ECN1881CAU	ECN1882CAU	ECN1883CAU ⑤	ECN1888CAU	AN16VN0CB
	600	900			ECN1881DAU	ECN1882DAU	ECN1883DAU ⑤	ECN1888DAU	AN16VN0DB
9	240	800	120	⑦	ECN1891BAU	ECN1892BAU	ECN1893BAU ⑤	ECN1898BAU	AN16WN0B
	480	1000 ⑧			ECN1891CAU	ECN1892CAU	ECN1893CAU ⑤	ECN1898CAU	AN16WN0C
	600	1000			ECN1891DAU	ECN1892DAU	ECN1893DAU ⑤	ECN1898DAU	AN16WN0D

Starters do not include heater packs. Select 1 carton of 3 heater packs. For Heater Pack Selection, see **Page 16-6**.
Starters with Electronic Overload, see **Page 16-45** of Modification Codes.

① Other control power transformer primary and/or secondary voltages, see **Page 3-20**.
② All Type 12 enclosures are standardized with external reset. For internal reset, order mod code **R5**.
③ Type 12 enclosure is without safety door interlock. When safety door interlock is required, add modification **E11**.
④ Fuse clips are for Class R fuses. For H and J fuses see mods, **Page 16-42**.
⑤ Type 4 (Painted steel) Sizes 6 – 9.
⑥ 100,000 RMS short-circuit rating.
⑦ Supply hp, voltage, FLA and whether motor is design E or not when ordering the motor.
⑧ For 1250 and 1600 hp ratings at 460V, consult Eaton.
⑨ The Catalog Numbers listed in the Type 4X column are for Type 4X 304-Grade Stainless Steel, as indicated by the seventh digit **4**. Example: ECN1804EAB. To order Type 4X 316-Grade Stainless Steel, change that digit to **9**. To order Type 4 Painted Steel, change that digit to **3**. To order Nonmetallic, change that digit to **5**. For details on these Alternate Enclosures, see **Tab 14**.

Cover Control ..... **Page 3-21**
Other Magnet Coils ..... **Page 3-20**
Dimensions ..... **Page 15-2**
Accessories ..... **Page 16-4**
Modifications ..... **Page 16-40**
Technical Data ..... **Page 18-7**

Table 3-37. Class ECN18 — Combination Reversing Starter — Non-fusible Disconnect with CPT

NEMA Size	Primary Voltage ①	Max. hp Rating	Magnet Coil Voltage	Disconnect Switch Rating	Type 1 General Purpose	Type 3R Rainproof	Type 4X Watertight & Dust-Tight Stainless Steel ⑦	Type 12 Dust-Tight Industrial External Reset ②③	Component Starter (Open)
					Catalog Number	Catalog Number	Catalog Number	Catalog Number	Catalog Number
00	208	1-1/2	120	30A	ECN18A1EAA	ECN18A2EAA	ECN18A4EAA	ECN18A8EAA	AN16AN0EC
	240	1-1/2			ECN18A1BAA	ECN18A2BAA	ECN18A4BAA	ECN18A8BAA	AN16AN0BC
	480	2			ECN18A1CAA	ECN18A2CAA	ECN18A4CAA	ECN18A8CAA	AN16AN0CC
	600	2			ECN18A1DAA	ECN18A2DAA	ECN18A4DAA	ECN18A8DAA	AN16AN0DC
0	208	3	120	30A	ECN1801EAA	ECN1802EAA	ECN1804EAA	ECN1808EAA	AN16BN0EC
	240	3			ECN1801BAA	ECN1802BAA	ECN1804BAA	ECN1808BAA	AN16BN0BC
	480	5			ECN1801CAA	ECN1802CAA	ECN1804CAA	ECN1808CAA	AN16BN0CC
	600	5			ECN1801DAA	ECN1802DAA	ECN1804DAA	ECN1808DAA	AN16BN0DC
1	208	7-1/2	120	30A	ECN1811EAA	ECN1812EAA	ECN1814EAA	ECN1818EAA	AN16DN0EB
	240	7-1/2			ECN1811BAA	ECN1812BAA	ECN1814BAA	ECN1818BAA	AN16DN0BB
	480	10			ECN1811CAA	ECN1812CAA	ECN1814CAA	ECN1818CAA	AN16DN0CB
	600	10			ECN1811DAA	ECN1812DAA	ECN1814DAA	ECN1818DAA	AN16DN0DB
2	208	10	120	60A	ECN1821EAA	ECN1822EAA	ECN1824EAA	ECN1828EAA	AN16GN0EB
	240	15			ECN1821BAA	ECN1822BAA	ECN1824BAA	ECN1828BAA	AN16GN0BB
	480	25			ECN1821CAA	ECN1822CAA	ECN1824CAA	ECN1828CAA	AN16GN0CB
	600	25			ECN1821DAA	ECN1822DAA	ECN1824DAA	ECN1828DAA	AN16GN0DB
3	208	25	120	100A	ECN1831EAA	ECN1832EAA	ECN1834EAA	ECN1838EAA	AN16KN0E
	240	30			ECN1831BAA	ECN1832BAA	ECN1834BAA	ECN1838BAA	AN16KN0B
	480	50			ECN1831CAA	ECN1832CAA	ECN1834CAA	ECN1838CAA	AN16KN0C
	600	50			ECN1831DAA	ECN1832DAA	ECN1834DAA	ECN1838DAA	AN16KN0D
4	208	40	120	200A	ECN1841EAA	ECN1842EAA	ECN1844EAA	ECN1848EAA	AN16NN0E
	240	50			ECN1841BAA	ECN1842BAA	ECN1844BAA	ECN1848BAA	AN16NN0B
	480	100			ECN1841CAA	ECN1842CAA	ECN1844CAA	ECN1848CAA	AN16NN0C
	600	100			ECN1841DAA	ECN1842DAA	ECN1844DAA	ECN1848DAA	AN16NN0D
5	208	75	120	400A	ECN1851EAA	ECN1852EAA	ECN1854EAA	ECN1858EAA	AN16SN0EB
	240	100			ECN1851BAA	ECN1852BAA	ECN1854BAA	ECN1858BAA	AN16SN0BB
	480	200			ECN1851CAA	ECN1852CAA	ECN1854CAA	ECN1858CAA	AN16SN0CB
	600	200			ECN1851DAA	ECN1852DAA	ECN1854DAA	ECN1858DAA	AN16SN0DB
6	208	150	120	600A	ECN1861EAA	ECN1862EAA	ECN1863EAA ④	ECN1868EAA	AN16TN0EB
	240	200			ECN1861BAA	ECN1862BAA	ECN1863BAA ④	ECN1868BAA	AN16TN0BB
	480	400			ECN1861CAA	ECN1862CAA	ECN1863CAA ④	ECN1868CAA	AN16TN0CB
	600	400			ECN1861DAA	ECN1862DAA	ECN1863DAA ④	ECN1868DAA	AN16TN0DB
7	240	300	120	⑤	ECN1871BAA	ECN1872BAA	ECN1873BAA ④	ECN1878BAA	AN16UN0BB
	480	600			ECN1871CAA	ECN1872CAA	ECN1873CAA ④	ECN1878CAA	AN16UN0CB
	600	600			ECN1871DAA	ECN1872DAA	ECN1873DAA ④	ECN1878DAA	AN16UN0DB
8	240	450	120	⑤	ECN1881BAA	ECN1882BAA	ECN1883BAA ④	ECN1888BAA	AN16VN0BB
	480	900			ECN1881CAA	ECN1882CAA	ECN1883CAA ④	ECN1888CAA	AN16VN0CB
	600	900			ECN1881DAA	ECN1882DAA	ECN1883DAA ④	ECN1888DAA	AN16VN0DB
9	240	800	120	⑤	ECN1891BAA	ECN1892BAA	ECN1893BAA ④	ECN1898BAA	AN16WN0B
	480	1000 ⑥			ECN1891CAA	ECN1892CAA	ECN1893CAA ④	ECN1898CAA	AN16WN0C
	600	1000			ECN1891DAA	ECN1892DAA	ECN1893DAA ④	ECN1898DAA	AN16WN0D

Starters do not include heater packs. Select 1 carton of 3 heater packs. For Heater Pack Selection, see **Page 16-6**.
Starters with Electronic Overload, see **Page 16-45** of Modification Codes.

① Other control power transformer primary and/or secondary voltages, see **Page 3-20**.
② All Type 12 enclosures are standardized with external reset. For internal reset, order Mod Code **R5**.
③ Type 12 enclosure is without safety door interlock. When safety door interlock is required, add modification **E11**.
④ Type 4 (Painted steel) Sizes 6 – 9.
⑤ Supply hp, voltage, FLA and whether motor is design E or not when ordering the starter.
⑥ For 1250 and 1600 hp ratings at 460V, consult Eaton.
⑦ The Catalog Numbers listed in the Type 4X column are for Type 4X 304-Grade Stainless Steel, as indicated by the seventh digit **4**. Example: ECN1804EAA. To order Type 4X 316-Grade Stainless Steel, change that digit to **9**. To order Type 4 Painted Steel, change that digit to **3**. To order Nonmetallic, change that digit to **5**. For details on these Alternate Enclosures, see **Tab 14**.

Cover Control ..... **Page 3-21**
Other Magnet Coils ..... **Page 3-20**
Dimensions ..... **Page 15-2**
Accessories ..... **Page 16-4**
Modifications ..... **Page 16-40**
Technical Data ..... **Page 18-7**

Features

- 3-Phase Magnetic
- 3-Pole Non-reversing or Reversing
- Standard Interchangeable Heater OLR
- Optional Electronic Overload
- 600V Maximum
- 100,000 RMS 480V, 25,000 RMS 600V

Product Selection

Table 3-38. Class ECN22 — Combination Non-reversing Starter — Circuit Breaker

NEMA Size	Motor Voltage	Max. hp Rating	Magnet Coil Voltage ①	Circuit Breaker Type	Type 1 General Purpose	Type 3R Rainproof	Type 4X ④ Watertight & Dust-Tight Stainless Steel	Type 12 Dust-Tight Industrial External Reset ②③	Component Starter (Open)
					Catalog Number	Catalog Number	Catalog Number	Catalog Number	Catalog Number
00	200	1	120	HMCPE 7A	ECN22A1AAC	ECN22A2AAC	ECN22A4AAC	ECN22A8AAC	AN16AN0AC
		1-1/2		HMCPE 15A	ECN22A1AAD	ECN22A2AAD	ECN22A4AAD	ECN22A8AAD	
	230	1		HMCPE 7A	ECN22A1AAC	ECN22A2AAC	ECN22A4AAC	ECN22A8AAC	
		1-1/2		HMCPE 15A	ECN22A1AAD	ECN22A2AAD	ECN22A4AAD	ECN22A8AAD	
	460	1		HMCPE 3A	ECN22A1AAB	ECN22A2AAB	ECN22A4AAB	ECN22A8AAB	
		2		HMCPE 7A	ECN22A1AAC	ECN22A2AAC	ECN22A4AAC	ECN22A8AAC	
	575	1		HMCP 3A	ECN22A1AAB	ECN22A2AAB	ECN22A4AAB	ECN22A8AAB	
		2		HMCP 7A	ECN22A1AAC	ECN22A2AAC	ECN22A4AAC	ECN22A8AAC	
0	200	1	120	HMCPE 7A	ECN2201AAC	ECN2202AAC	ECN2204AAC	ECN2208AAC	AN16BN0AC
		3		HMCPE 15A	ECN2201AAD	ECN2202AAD	ECN2204AAD	ECN2208AAD	
	230	1		HMCPE 7A	ECN2201AAC	ECN2202AAC	ECN2204AAC	ECN2208AAC	
		3		HMCPE 15A	ECN2201AAD	ECN2202AAD	ECN2204AAD	ECN2208AAD	
	460	1		HMCPE 3A	ECN2201AAB	ECN2202AAB	ECN2204AAB	ECN2208AAB	
		3		HMCPE 7A	ECN2201AAC	ECN2202AAC	ECN2204AAC	ECN2208AAC	
		5		HMCPE 15A	ECN2201AAD	ECN2202AAD	ECN2204AAD	ECN2208AAD	
	575	1		HMCP 3A	ECN2201AAB	ECN2202AAB	ECN2204AAB	ECN2208AAB	
		3		HMCP 15A	ECN2201AAD	ECN2202AAD	ECN2204AAD	ECN2208AAD	
		5		HMCP 7A	ECN2201AAC	ECN2202AAC	ECN2204AAC	ECN2208AAC	
1	200	1	120	HMCPE 7A	ECN2211AAC	ECN2212AAC	ECN2214AAC	ECN2218AAC	AN16DN0AB
		3		HMCPE 15A	ECN2211AAD	ECN2212AAD	ECN2214AAD	ECN2218AAD	
		5		HMCPE 30A	ECN2211AAE	ECN2212AAE	ECN2214AAE	ECN2218AAE	
		7-1/2		HMCPE 50A	ECN2211AAF	ECN2212AAF	ECN2214AAF	ECN2218AAF	
	230	1		HMCPE 7A	ECN2211AAC	ECN2212AAC	ECN2214AAC	ECN2218AAC	
		3		HMCPE 15A	ECN2211AAD	ECN2212AAD	ECN2214AAD	ECN2218AAD	
		5		HMCPE 30A	ECN2211AAE	ECN2212AAE	ECN2214AAE	ECN2218AAE	
		7-1/2		HMCPE 50A	ECN2211AAF	ECN2212AAF	ECN2214AAF	ECN2218AAF	
	460	1		HMCPE 3A	ECN2211AAB	ECN2212AAB	ECN2214AAB	ECN2218AAB	
		3		HMCPE 7A	ECN2211AAC	ECN2212AAC	ECN2214AAC	ECN2218AAC	
		5		HMCPE 15A	ECN2211AAD	ECN2212AAD	ECN2214AAD	ECN2218AAD	
		10		HMCPE 30A	ECN2211AAE	ECN2212AAE	ECN2214AAE	ECN2218AAE	
	575	1		HMCP 3A	ECN2211AAB	ECN2212AAB	ECN2214AAB	ECN2218AAB	
		3		HMCP 7A	ECN2211AAC	ECN2212AAC	ECN2214AAC	ECN2218AAC	
		5		HMCP 15A	ECN2211AAD	ECN2212AAD	ECN2214AAD	ECN2218AAD	
		10		HMCP 30A	ECN2211AAE	ECN2212AAE	ECN2214AAE	ECN2218AAE	

Starters do not include heater packs. Select 1 carton of 3 heater packs. For Heater Pack Selection, see **Page 16-6**.
Starters with Electronic Overload, see **Page 16-45** of Modification Codes.

① For other magnet coil voltages substitute the eighth digit with appropriate digit based on **Table 3-17**.
② All Type 12 enclosures are standardized with external reset. For internal reset, order Mod Code **R5**.
③ Type 12 enclosure is without safety door interlock. When safety door interlock is required, add modification **E11**.
④ The Catalog Numbers listed in the Type 4X column are for Type 4X 304-Grade Stainless Steel, as indicated by the seventh digit **4**. Example: ECN2204AAC. To order Type 4X 316-Grade Stainless Steel, change that digit to **9**. To order Type 4 Painted Steel, change that digit to **3**. To order Non-metallic, change that digit to **5**. For details on these Alternate Enclosures, see **Tab 14**.

Cover Control ..... **Page 3-21**
Other Magnet Coils ..... **Page 3-20**
Dimensions ..... **Page 15-2**
Accessories ..... **Page 16-4**
Modifications ..... **Page 16-40**
Technical Data ..... **Page 18-7**

Table 3-38. Class ECN22 — Combination Non-reversing Starter — Circuit Breaker (Continued)

NEMA Size	Motor Voltage	Max. hp Rating	Magnet Coil Voltage ①	Circuit Breaker Type	Type 1 General Purpose	Type 3R Rainproof	Type 4X ⑤ Watertight & Dust-Tight Stainless Steel	Type 12 Dust-Tight Industrial External Reset ②③	Component Starter (Open)
					Catalog Number	Catalog Number	Catalog Number	Catalog Number	Catalog Number
2	200	10	120	HMCPE 50A	ECN2221AAF	ECN2222AAF	ECN2224AAF	ECN2228AAF	AN16GN0AB
	230	10		HMCPE 50A	ECN2221AAF	ECN2222AAF	ECN2224AAF	ECN2228AAF	
		15		HMCPE 70A	ECN2221AAW	ECN2222AAW	ECN2224AAW	ECN2228AAW	
	460	25		HMCPE 50A	ECN2221AAF	ECN2222AAF	ECN2224AAF	ECN2228AAF	
	575	15		HMCP 30A	ECN2221AAE	ECN2222AAE	ECN2224AAE	ECN2228AAE	
		25		HMCP 50A	ECN2221AAF	ECN2222AAF	ECN2224AAF	ECN2228AAF	
3	200	20	120	HMCPE 100A	ECN2231AAG	ECN2232AAG	ECN2234AAG	ECN2238AAG	AN16KN0A
		25		HMCPE 100A	ECN2231AAX	ECN2232AAX	ECN2234AAX	ECN2238AAX	
	230	25		HMCPE 100A	ECN2231AAG	ECN2232AAG	ECN2234AAG	ECN2238AAG	
		30		HMCPE 100A	ECN2231AAX	ECN2232AAX	ECN2234AAX	ECN2238AAX	
	460	50		HMCPE 100A	ECN2231AAG	ECN2232AAG	ECN2234AAG	ECN2238AAG	
	575	30		HMCP 50A	ECN2231AAF	ECN2232AAF	ECN2234AAF	ECN2238AAF	
		50		HMCP 100A	ECN2231AAG	ECN2232AAG	ECN2234AAG	ECN2238AAG	
4	200	40	120	HMCP 150A	ECN2241AAH	ECN2242AAH	ECN2244AAH	ECN2248AAH	AN16NN0A
	230	50		HMCP 150A	ECN2241AAH	ECN2242AAH	ECN2244AAH	ECN2248AAH	
	460	100		HMCP 150A	ECN2241AAH	ECN2242AAH	ECN2244AAH	ECN2248AAH	
	575	100		HMCP 150A	ECN2241AAH	ECN2242AAH	ECN2244AAH	ECN2248AAH	
5	200	50	120	HMCP 250A	ECN2251AAJ	ECN2252AAJ	ECN2254AAJ	ECN2258AAJ	AN16SN0AB
		75		HMCP 400A	ECN2251AAK	ECN2252AAK	ECN2254AAK	ECN2258AAK	
	230	60		HMCP 250A	ECN2251AAJ	ECN2252AAJ	ECN2254AAJ	ECN2258AAJ	
		100		HMCP 400A	ECN2251AAK	ECN2252AAK	ECN2254AAK	ECN2258AAK	
	460	125		HMCP 250A	ECN2251AAJ	ECN2252AAJ	ECN2254AAJ	ECN2258AAJ	
		200		HMCP 400A	ECN2251AAK	ECN2252AAK	ECN2254AAK	ECN2258AAK	
	575	150		HMCP 250A	ECN2251AAJ	ECN2252AAJ	ECN2254AAJ	ECN2258AAJ	
		200		HMCP 400A	ECN2251AAK	ECN2252AAK	ECN2254AAK	ECN2258AAK	
6	200	150	120	HMCP 600A	ECN2261AAL	ECN2262AAL	ECN2263AAL ④	ECN2268AAL	AN16TN0AB
	230	200		HMCP 600A	ECN2261AAL	ECN2262AAL	ECN2263AAL ④	ECN2268AAL	
	460	350		HMCP 600A	ECN2261AAL	ECN2262AAL	ECN2263AAL ④	ECN2268AAL	
		400		HMCP 1200A	ECN2261AAP	ECN2262AAP	ECN2263AAP ④	ECN2268AAP	
	575	400		HMCP 600A	ECN2261AAL	ECN2262AAL	ECN2263AAL ④	ECN2268AAL	
7	230	300	120	—	ECN2271AAU	ECN2272AAU	ECN2273AAU ④	ECN2278AAU	AN16UN0AB
	460	600		—	ECN2271AAU	ECN2272AAU	ECN2273AAU ④	ECN2278AAU	
	575	600		—	ECN2271AAU	ECN2272AAU	ECN2273AAU ④	ECN2278AAU	
8	230	450	120	—	ECN2281AAU	ECN2282AAU	ECN2283AAU ④	ECN2288AAU	AN16VN0AB
	460	900		—	ECN2281AAU	ECN2282AAU	ECN2283AAU ④	ECN2288AAU	
	575	900		—	ECN2281AAU	ECN2282AAU	ECN2283AAU ④	ECN2288AAU	
9	230	800	120	—	ECN2291AAU	ECN2292AAU	ECN2293AAU ④	ECN2298AAU	AN16WN0A
	460	1600		—	ECN2291AAU	ECN2292AAU	ECN2293AAU ④	ECN2298AAU	
	575	1600		—	ECN2291AAU	ECN2292AAU	ECN2293AAU ④	ECN2298AAU	

Starters do not include heater packs. Select 1 carton of 3 heater packs. For Heater Pack Selection, see **Page 16-6**.
Starters with Electronic Overload, see **Page 16-45** of Modification Codes.

① For other magnet coil voltages substitute the eighth digit with appropriate digit based on **Table 3-17**.
② All Type 12 enclosures are standardized with external reset. For internal reset, order Mod Code **R5**.
③ Type 12 enclosure is without safety door interlock. When safety door interlock is required, add modification **E11**.
④ Type 4 (Painted steel) Sizes 6 – 9.
⑤ The Catalog Numbers listed in the Type 4X column are for Type 4X 304-Grade Stainless Steel, as indicated by the seventh digit **4**. Example: ECN2204AAC. To order Type 4X 316-Grade Stainless Steel, change that digit to **9**. To order Type 4 Painted Steel, change that digit to **3**. To order Nonmetallic, change that digit to **5**. For details on these Alternate Enclosures, see **Tab 14**.

Cover Control ..... **Page 3-21**
Other Magnet Coils ..... **Page 3-20**
Dimensions ..... **Page 15-2**
Accessories ..... **Page 16-4**
Modifications ..... **Page 16-40**
Technical Data ..... **Page 18-7**

Table 3-39. Class ECN22 — Special Enclosure Combination Non-reversing Starter — Circuit Breaker

NEMA Size	Motor Voltage	Max. hp Rating	Magnet Coil Voltage ①	Circuit Breaker Type	Type 1 General Purpose	Type 4X ② Watertight & Dust-Tight Stainless Steel	Type 12 Dust-Tight Industrial ③ External Reset	Type 12 Dust-Tight Industrial ③ Internal Rest	Component Starter (Open)
					Catalog Number	Catalog Number	Catalog Number	Catalog Number	Catalog Number
Horizontal Enclosure									
1	200	1	120	HMCPE 7A	ECN2211AAC-E13	ECN2212AAC-E13	ECN2214AAC-E13	ECN2218AAC-E13	AN16DN0AB
		3		HMCPE 15A	ECN2211AAD-E13	ECN2212AAD-E13	ECN2214AAD-E13	ECN2218AAD-E13	
		5		HMCPE 30A	ECN2211AAE-E13	ECN2212AAE-E13	ECN2214AAE-E13	ECN2218AAE-E13	
		7-1/2		HMCPE 50A	ECN2211AAF-E13	ECN2212AAF-E13	ECN2214AAF-E13	ECN2218AAF-E13	
	230	1		HMCPE 7A	ECN2211AAC-E13	ECN2212AAC-E13	ECN2214AAC-E13	ECN2218AAC-E13	
		3		HMCPE 15A	ECN2211AAD-E13	ECN2212AAD-E13	ECN2214AAD-E13	ECN2218AAD-E13	
		5		HMCPE 30A	ECN2211AAE-E13	ECN2212AAE-E13	ECN2214AAE-E13	ECN2218AAE-E13	
		7-1/2		HMCPE 50A	ECN2211AAF-E13	ECN2212AAF-E13	ECN2214AAF-E13	ECN2218AAF-E13	
	460	1		HMCPE 3A	ECN2211AAB-E13	ECN2212AAB-E13	ECN2214AAB-E13	ECN2218AAB-E13	
		3		HMCPE 7A	ECN2211AAC-E13	ECN2212AAC-E13	ECN2214AAC-E13	ECN2218AAC-E13	
		5		HMCPE 15A	ECN2211AAD-E13	ECN2212AAD-E13	ECN2214AAD-E13	ECN2218AAD-E13	
		10		HMCPE 30A	ECN2211AAE-E13	ECN2212AAE-E13	ECN2214AAE-E13	ECN2218AAE-E13	
	575	1		HMCP 3A	ECN2211AAB-E13	ECN2212AAB-E13	ECN2214AAB-E13	ECN2218AAB-E13	
		3		HMCP 7A	ECN2211AAC-E13	ECN2212AAC-E13	ECN2214AAC-E13	ECN2218AAC-E13	
		5		HMCP 15A	ECN2211AAD-E13	ECN2212AAD-E13	ECN2214AAD-E13	ECN2218AAD-E13	
		10		HMCP 30A	ECN2211AAE-E13	ECN2212AAE-E13	ECN2214AAE-E13	ECN2218AAE-E13	
2	200	10	120	HMCPE 50A	ECN2221AAF-E13	ECN2222AAF-E13	ECN2224AAF-E13	ECN2228AAF-E13	AN16GN0AB
	230	10		HMCPE 50A	ECN2221AAF-E13	ECN2222AAF-E13	ECN2224AAF-E13	ECN2228AAF-E13	
		15		HMCPE 70A	ECN2221AAW-E13	ECN2222AAW-E13	ECN2224AAW-E13	ECN2228AAW-E13	
	460	25		HMCPE 50A	ECN2221AAF-E13	ECN2222AAF-E13	ECN2224AAF-E13	ECN2228AAF-E13	
	575	15		HMCP 30A	ECN2221AAE-E13	ECN2222AAE-E13	ECN2224AAE-E13	ECN2228AAE-E13	
		25		HMCP 50A	ECN2221AAF-E13	ECN2222AAF-E13	ECN2224AAF-E13	ECN2228AAF-E13	
Oversize Enclosure — without Control Transformer									
0	200	1	120	HMCPE 7A	ECN2201AAC-E3	ECN2202AAC-E3	ECN2204AAC-E3	ECN2208AAC-E3	AN16BN0AC
		3		HMCPE 15A	ECN2201AAD-E3	ECN2202AAD-E3	ECN2204AAD-E3	ECN2208AAD-E3	
	230	1		HMCPE 7A	ECN2201AAC-E3	ECN2202AAC-E3	ECN2204AAC-E3	ECN2208AAC-E3	
		3		HMCPE 15A	ECN2201AAD-E3	ECN2202AAD-E3	ECN2204AAD-E3	ECN2208AAD-E3	
	460	1		HMCPE 3A	ECN2201AAB-E3	ECN2202AAB-E3	ECN2204AAB-E3	ECN2208AAB-E3	
		3		HMCPE 7A	ECN2201AAC-E3	ECN2202AAC-E3	ECN2204AAC-E3	ECN2208AAC-E3	
		5		HMCPE 15A	ECN2201AAD-E3	ECN2202AAD-E3	ECN2204AAD-E3	ECN2208AAD-E3	
	575	1		HMCP 3A	ECN2201AAB-E3	ECN2202AAB-E3	ECN2204AAB-E3	ECN2208AAB-E3	
		3		HMCP 15A	ECN2201AAD-E3	ECN2202AAD-E3	ECN2204AAD-E3	ECN2208AAD-E3	
		5		HMCP 7A	ECN2201AAC-E3	ECN2202AAC-E3	ECN2204AAC-E3	ECN2208AAC-E3	
1	200	1	120	HMCPE 7A	ECN2211AAC-E3	ECN2212AAC-E3	ECN2214AAC-E3	ECN2218AAC-E3	AN16DN0AB
		3		HMCPE 15A	ECN2211AAD-E3	ECN2212AAD-E3	ECN2214AAD-E3	ECN2218AAD-E3	
		5		HMCPE 30A	ECN2211AAE-E3	ECN2212AAE-E3	ECN2214AAE-E3	ECN2218AAE-E3	
		7-1/2		HMCPE 50A	ECN2211AAF-E3	ECN2212AAF-E3	ECN2214AAF-E3	ECN2218AAF-E3	
	230	1		HMCPE 7A	ECN2211AAC-E3	ECN2212AAC-E3	ECN2214AAC-E3	ECN2218AAC-E3	
		3		HMCPE 15A	ECN2211AAD-E3	ECN2212AAD-E3	ECN2214AAD-E3	ECN2218AAD-E3	
		5		HMCPE 30A	ECN2211AAE-E3	ECN2212AAE-E3	ECN2214AAE-E3	ECN2218AAE-E3	
		7-1/2		HMCPE 50A	ECN2211AAF-E3	ECN2212AAF-E3	ECN2214AAF-E3	ECN2218AAF-E3	
	460	1		HMCPE 3A	ECN2211AAB-E3	ECN2212AAB-E3	ECN2214AAB-E3	ECN2218AAB-E3	
		3		HMCPE 7A	ECN2211AAC-E3	ECN2212AAC-E3	ECN2214AAC-E3	ECN2218AAC-E3	
		5		HMCPE 15A	ECN2211AAD-E3	ECN2212AAD-E3	ECN2214AAD-E3	ECN2218AAD-E3	
		10		HMCPE 30A	ECN2211AAE-E3	ECN2212AAE-E3	ECN2214AAE-E3	ECN2218AAE-E3	
	575	1		HMCP 3A	ECN2211AAB-E3	ECN2212AAB-E3	ECN2214AAB-E3	ECN2218AAB-E3	
		3		HMCP 7A	ECN2211AAC-E3	ECN2212AAC-E3	ECN2214AAC-E3	ECN2218AAC-E3	
		5		HMCP 15A	ECN2211AAD-E3	ECN2212AAD-E3	ECN2214AAD-E3	ECN2218AAD-E3	
		10		HMCP 30A	ECN2211AAE-E3	ECN2212AAE-E3	ECN2214AAE-E3	ECN2218AAE-E3	
2	200	10	120	HMCPE 50A	ECN2221AAF-E3	ECN2222AAF-E3	ECN2224AAF-E3	ECN2228AAF-E3	AN16GN0AB
	230	10		HMCPE 50A	ECN2221AAF-E3	ECN2222AAF-E3	ECN2224AAF-E3	ECN2228AAF-E3	
		15		HMCPE 70A	ECN2221AAW-E3	ECN2222AAW-E3	ECN2224AAW-E3	ECN2228AAW-E3	
	460	25		HMCPE 50A	ECN2221AAF-E3	ECN2222AAF-E3	ECN2224AAF-E3	ECN2228AAF-E3	
	575	15		HMCP 30A	ECN2221AAE-E3	ECN2222AAE-E3	ECN2224AAE-E3	ECN2228AAE-E3	
		25		HMCP 50A	ECN2221AAF-E3	ECN2222AAF-E3	ECN2224AAF-E3	ECN2228AAF-E3	

Starters do not include heater packs. Select 1 carton of 3 heater packs. For Heater Pack Selection, see **Page 16-6**.
Starters with Electronic Overload, see **Page 16-45** of Modification Codes.

① For other magnet coil voltages substitute the eighth digit with appropriate digit based on **Table 3-17**.
② The Catalog Numbers listed in the Type 4X column are for Type 4X 304-Grade Stainless Steel, as indicated by the seventh digit **4**. Example: ECN2204AAC-E3. To order Type 4X 316-Grade Stainless Steel, change that digit to **9**. To order Type 4 Painted Steel, change that digit to **3**. To order Nonmetallic, change that digit to **5**. For details on these Alternate Enclosures, see **Tab 14**.
③ To order Type 12 enclosures with safety door interlock add modification **E11**.

Cover Control ..... **Page 3-21**
Other Magnet Coils ..... **Page 3-20**
Dimensions ..... **Page 15-2**
Accessories ..... **Page 16-4**
Modifications ..... **Page 16-40**
Technical Data ..... **Page 18-7**

Table 3-40. Class ECN23 — Combination Reversing Starter — Circuit Breaker ④

NEMA Size	Motor Voltage	Max. hp Rating	Magnet Coil Voltage ①	Circuit Breaker Type	Type 1 General Purpose	Type 3R Rainproof	Type 4X ⑤ Watertight & Dust-Tight Stainless Steel	Type 12 Dust-Tight Industrial External Reset ②③	Component Starter (Open)
					Catalog Number	Catalog Number	Catalog Number	Catalog Number	Catalog Number
00	200	1 1-1/2	120	HMCPE 7A HMCPE 15A	ECN23A1AAC ECN23A1AAD	ECN23A2AAC ECN23A2AAD	ECN23A4AAC ECN23A4AAD	ECN23A8AAC ECN23A8AAD	AN56AN0AC
	230	1 1-1/2		HMCPE 7A HMCPE 15A	ECN23A1AAC ECN23A1AAD	ECN23A2AAC ECN23A2AAD	ECN23A4AAC ECN23A4AAD	ECN23A8AAC ECN23A8AAD	
	460	1 2		HMCPE 3A HMCPE 7A	ECN23A1AAB ECN23A1AAC	ECN23A2AAB ECN23A2AAC	ECN23A4AAB ECN23A4AAC	ECN23A8AAB ECN23A8AAC	
	575	1 2		HMCP 3A HMCP 7A	ECN23A1AAB ECN23A1AAC	ECN23A2AAB ECN23A2AAC	ECN23A4AAB ECN23A4AAC	ECN23A8AAB ECN23A8AAC	
0	200	1 3	120	HMCPE 7A HMCPE 15A	ECN2301AAC ECN2301AAD	ECN2302AAC ECN2302AAD	ECN2304AAC ECN2304AAD	ECN2308AAC ECN2308AAD	AN56BN0AC
	230	1 3		HMCPE 7A HMCPE 15A	ECN2301AAC ECN2301AAD	ECN2302AAC ECN2302AAD	ECN2304AAC ECN2304AAD	ECN2308AAC ECN2308AAD	
	460	1 3 5		HMCPE 3A HMCPE 7A HMCPE 15A	ECN2301AAB ECN2301AAC ECN2301AAD	ECN2302AAB ECN2302AAC ECN2302AAD	ECN2304AAB ECN2304AAC ECN2304AAD	ECN2308AAB ECN2308AAC ECN2308AAD	
	575	1 3 5		HMCP 3A HMCP 15A HMCP 7A	ECN2301AAB ECN2301AAD ECN2301AAC	ECN2302AAB ECN2302AAD ECN2302AAC	ECN2304AAB ECN2304AAD ECN2304AAC	ECN2308AAB ECN2308AAD ECN2308AAC	
1	200	1 3 5 7-1/2	120	HMCPE 7A HMCPE 15A HMCPE 30A HMCPE 50A	ECN2311AAC ECN2311AAD ECN2311AAE ECN2311AAF	ECN2312AAC ECN2312AAD ECN2312AAE ECN2312AAF	ECN2314AAC ECN2314AAD ECN2314AAE ECN2314AAF	ECN2318AAC ECN2318AAD ECN2318AAE ECN2318AAF	AN56DN0AB
	230	1 3 5 7-1/2		HMCPE 7A HMCPE 15A HMCPE 30A HMCPE 50A	ECN2311AAC ECN2311AAD ECN2311AAE ECN2311AAF	ECN2312AAC ECN2312AAD ECN2312AAE ECN2312AAF	ECN2314AAC ECN2314AAD ECN2314AAE ECN2314AAF	ECN2318AAC ECN2318AAD ECN2318AAE ECN2318AAF	
	460	1 3 5 10		HMCPE 3A HMCPE 7A HMCPE 15A HMCPE 30A	ECN2311AAB ECN2311AAC ECN2311AAD ECN2311AAE	ECN2312AAB ECN2312AAC ECN2312AAD ECN2312AAE	ECN2314AAB ECN2314AAC ECN2314AAD ECN2314AAE	ECN2318AAB ECN2318AAC ECN2318AAD ECN2318AAE	
	575	1 3 5 10		HMCP 3A HMCP 7A HMCP 15A HMCP 30A	ECN2311AAB ECN2311AAC ECN2311AAD ECN2311AAE	ECN2312AAB ECN2312AAC ECN2312AAD ECN2312AAE	ECN2314AAB ECN2314AAC ECN2314AAD ECN2314AAE	ECN2318AAB ECN2318AAC ECN2318AAD ECN2318AAE	
2	200	10	120	HMCPE 50A	ECN2321AAF	ECN2322AAF	ECN2324AAF	ECN2328AAF	AN56GN0AB
	230	10 15		HMCPE 50A HMCPE 70A	ECN2321AAF ECN2321AAW	ECN2322AAF ECN2322AAW	ECN2324AAF ECN2324AAW	ECN2328AAF ECN2328AAW	
	460	25		HMCPE 50A	ECN2321AAF	ECN2322AAF	ECN2324AAF	ECN2328AAF	
	575	15 25		HMCP 30A HMCP 50A	ECN2321AAE ECN2321AAF	ECN2322AAE ECN2322AAF	ECN2324AAE ECN2324AAF	ECN2328AAE ECN2328AAF	

Starters do not include heater packs. Select 1 carton of 3 heater packs. For Heater Pack Selection, see **Page 16-6**.
Starters with Electronic Overload, see **Page 16-45** of Modification Codes.

① For other magnet coil voltages substitute the eighth digit with appropriate digit based on **Table 3-17**.
② All Type 12 enclosures are standardized with external reset. For internal reset, order Mod Code **R5**.
③ Type 12 enclosure is without safety door interlock. When safety door interlock is required, add modification **E11**.
④ 100,000 RMS short-circuit – 480V
25,000 RMS short-circuit – 600V
⑤ The Catalog Numbers listed in the Type 4X column are for Type 4X 304-Grade Stainless Steel, as indicated by the seventh digit **4**. Example: ECN2304AAC. To order Type 4X 316-Grade Stainless Steel, change that digit to **9**. To order Type 4 Painted Steel, change that digit to **3**. To order Nonmetallic, change that digit to **5**. For details on these Alternate Enclosures, see **Tab 14**.

Cover Control ..... **Page 3-21**
Other Magnet Coils ..... **Page 3-20**
Dimensions ..... **Page 15-2**
Accessories ..... **Page 16-4**
Modifications ..... **Page 16-40**
Technical Data ..... **Page 18-7**

Table 3-40. Class ECN23 — Combination Reversing Starter — Circuit Breaker ④ (Continued)

NEMA Size	Motor Voltage	Max. hp Rating	Magnet Coil Voltage ①	Circuit Breaker Type	Type 1 General Purpose	Type 3R Rainproof	Type 4X ⑦ Watertight & Dust-Tight Stainless Steel	Type 12 Dust-Tight Industrial External Reset ②③	Component Starter (Open)
					Catalog Number	Catalog Number	Catalog Number	Catalog Number	Catalog Number
3	200	20 25	120	HMCPE 100A HMCPE 100A	ECN2331AAG ECN2331AAX	ECN2332AAG ECN2332AAX	ECN2334AAG ECN2334AAX	ECN2338AAG ECN2338AAX	AN56KN0A
	230	25 30		HMCPE 100A HMCPE 100A	ECN2331AAG ECN2331AAX	ECN2332AAG ECN2332AAX	ECN2334AAG ECN2334AAX	ECN2338AAG ECN2338AAX	
	460	50		HMCPE 100A	ECN2331AAG	ECN2332AAG	ECN2334AAG	ECN2338AAG	
	575	30 50		HMCP 50A HMCP 100A	ECN2331AAF ECN2331AAG	ECN2332AAF ECN2332AAG	ECN2334AAF ECN2334AAG	ECN2338AAF ECN2338AAG	
4	200 230 460 575	40 50 100 100	120	HMCP 150A HMCP 150A HMCP 150A HMCP 150A	ECN2341AAH ECN2341AAH ECN2341AAH ECN2341AAH	ECN2342AAH ECN2342AAH ECN2342AAH ECN2342AAH	ECN2344AAH ECN2344AAH ECN2344AAH ECN2344AAH	ECN2348AAH ECN2348AAH ECN2348AAH ECN2348AAH	AN56NN0A
5	200	50 75	230	HMCP 250A HMCP 400A	ECN2351AAJ ECN2351AAK	ECN2352AAJ ECN2352AAK	ECN2354AAJ ECN2354AAK	ECN2358AAJ ECN2358AAK	AN56SN0AB
	230	60 100		HMCP 250A HMCP 400A	ECN2351AAJ ECN2351AAK	ECN2352AAJ ECN2352AAK	ECN2354AAJ ECN2354AAK	ECN2358AAJ ECN2358AAK	
	460	125 200		HMCP 250A HMCP 400A	ECN2351AAJ ECN2351AAK	ECN2352AAJ ECN2352AAK	ECN2354AAJ ECN2354AAK	ECN2358AAJ ECN2358AAK	
	575	150 200		HMCP 250A HMCP 400A	ECN2351AAJ ECN2351AAK	ECN2352AAJ ECN2352AAK	ECN2354AAJ ECN2354AAK	ECN2358AAJ ECN2358AAK	
6	200	150	120	HMCP 600A	ECN2361AAL	ECN2362AAL	ECN2363AAL ⑤	ECN2368AAL	AN56TN0AB
	230	200		HMCP 600A	ECN2361AAL	ECN2362AAL	ECN2363AAL ⑤	ECN2368AAL	
	460	350 400		HMCP 600A HMCP 1200A	ECN2361AAL ECN2361AAP	ECN2362AAL ECN2362AAP	ECN2363AAL ⑤ ECN2363AAP ⑤	ECN2368AAL ECN2368AAP	
	575	400		HMCP 600A	ECN2361AAL	ECN2362AAL	ECN2363AAL ⑤	ECN2368AAL	
7	230 460 575	300 600 600	120	— — —	ECN2371AAU ⑥ ECN2371AAU ⑥ ECN2371AAU ⑥	ECN2372AAU ⑥ ECN2372AAU ⑥ ECN2372AAU ⑥	ECN2373AAU ⑤⑥ ECN2373AAU ⑤⑥ ECN2373AAU ⑤⑥	ECN2378AAU ⑥ ECN2378AAU ⑥ ECN2378AAU ⑥	AN56UN0AB
8	230 460 575	450 900 900	120	— — —	ECN2381AAU ⑥ ECN2381AAU ⑥ ECN2381AAU ⑥	ECN2382AAU ⑥ ECN2382AAU ⑥ ECN2382AAU ⑥	ECN2383AAU ⑥⑥ ECN2383AAU ⑥⑥ ECN2383AAU ⑥⑥	ECN2388AAU ⑥ ECN2388AAU ⑥ ECN2388AAU ⑥	AN56VN0AB
9	230 460 575	800 1600 1600	120	— — —	ECN2391AAU ⑥ ECN2391AAU ⑥ ECN2391AAU ⑥	ECN2392AAU ⑥ ECN2392AAU ⑥ ECN2392AAU ⑥	ECN2393AAU ⑥⑥ ECN2393AAU ⑥⑥ ECN2393AAU ⑥⑥	ECN2398AAU ⑥ ECN2398AAU ⑥ ECN2398AAU ⑥	AN56WN0A

Starters do not include heater packs. Select 1 carton of 3 heater packs. For Heater Pack Selection, see **Page 16-6**.
Starters with Electronic Overload, see **Page 16-45** of Modification Codes.

① For other magnet coil voltages substitute the eighth digit with appropriate digit based on **Table 3-17**.
② All Type 12 enclosures are standardized with external reset. For internal reset, order Mod Code **R5**.
③ Type 12 enclosure is without safety door interlock. When safety door interlock is required, add modification **E11**.
④ 100,000 RMS Short-circuit – 480V
25,000 RMS Short-circuit – 600V
⑤ Type 4 (Painted steel) Sizes 6 – 9.
⑥ Provide FLA to size disconnect properly.
⑦ The Catalog Numbers listed in the Type 4X column are for Type 4X 304-Grade Stainless Steel, as indicated by the seventh digit **4**. Example: ECN2304AAC. To order Type 4X 316-Grade Stainless Steel, change that digit to **9**. To order Type 4 Painted Steel, change that digit to **3**. To order Nonmetallic, change that digit to **5**. For details on these Alternate Enclosures, see **Tab 14**.

Cover Control ..... **Page 3-21**
Other Magnet Coils ..... **Page 3-20**
Dimensions ..... **Page 15-2**
Accessories ..... **Page 16-4**
Modifications ..... **Page 16-40**
Technical Data ..... **Page 18-7**

Table 3-41. Class ECN24 — Combination Non-reversing Starter — Circuit Breaker with CPT ④

NEMA Size	Motor Voltage ①	Max. hp Rating	Magnet Coil Voltage ①	Circuit Breaker Type	Type 1 General Purpose Catalog Number	Type 3R Rainproof Catalog Number	Type 4X ⑤ Watertight & Dust-Tight Stainless Steel Catalog Number	Type 12 Dust-Tight Industrial External Reset ②③ Catalog Number	Component Starter (Open) Catalog Number
00	200	1 1-1/2	120	HMCPE 7A HMCPE 15A	ECN24A1EAC ECN24A1EAD	ECN24A2EAC ECN24A2EAD	ECN24A4EAC ECN24A4EAD	ECN24A8EAC ECN24A8EAD	AN16AN0AC
	230	1 1-1/2		HMCPE 7A HMCPE 15A	ECN24A1BAC ECN24A1BAD	ECN24A2BAC ECN24A2BAD	ECN24A4BAC ECN24A4BAD	ECN24A8BAC ECN24A8BAD	
	460	1 2		HMCPE 3A HMCPE 7A	ECN24A1CAB ECN24A1CAC	ECN24A2CAB ECN24A2CAC	ECN24A4CAB ECN24A4CAC	ECN24A8CAB ECN24A8CAC	
	575	1 2		HMCP 3A HMCP 7A	ECN24A1DAB ECN24A1DAC	ECN24A2DAB ECN24A2DAC	ECN24A4DAB ECN24A4DAC	ECN24A8DAB ECN24A8DAC	
0	200	1 3	120	HMCPE 7A HMCPE 15A	ECN2401EAC ECN2401EAD	ECN2402EAC ECN2402EAD	ECN2404EAC ECN2404EAD	ECN2408EAC ECN2408EAD	AN16BN0AC
	230	1 3		HMCPE 7A HMCPE 15A	ECN2401BAC ECN2401BAD	ECN2402BAC ECN2402BAD	ECN2404BAC ECN2404BAD	ECN2408BAC ECN2408BAD	
	460	1 3 5		HMCPE 3A HMCPE 7A HMCPE 15A	ECN2401CAB ECN2401CAC ECN2401CAD	ECN2402CAB ECN2402CAC ECN2402CAD	ECN2404CAB ECN2404CAC ECN2404CAD	ECN2408CAB ECN2408CAC ECN2408CAD	
	575	1 3 5		HMCP 3A HMCP 15A HMCP 7A	ECN2401DAB ECN2401DAD ECN2401DAC	ECN2402DAB ECN2402DAD ECN2402DAC	ECN2404DAB ECN2404DAD ECN2404DAC	ECN2408DAB ECN2408DAD ECN2408DAC	
1	200	1 3 5 7-1/2	120	HMCPE 7A HMCPE 15A HMCPE 30A HMCPE 50A	ECN2411EAC ECN2411EAD ECN2411EAE ECN2411EAF	ECN2412EAC ECN2412EAD ECN2412EAE ECN2412EAF	ECN2414EAC ECN2414EAD ECN2414EAE ECN2414EAF	ECN2418EAC ECN2418EAD ECN2418EAE ECN2418EAF	AN16DN0AB
	230	1 3 5 7-1/2		HMCPE 7A HMCPE 15A HMCPE 30A HMCPE 50A	ECN2411BAC ECN2411BAD ECN2411BAE ECN2411BAF	ECN2412BAC ECN2412BAD ECN2412BAE ECN2412BAF	ECN2414BAC ECN2414BAD ECN2414BAE ECN2414BAF	ECN2418BAC ECN2418BAD ECN2418BAE ECN2418BAF	
	460	1 3 5 10		HMCPE 3A HMCPE 7A HMCPE 15A HMCPE 30A	ECN2411CAB ECN2411CAC ECN2411CAD ECN2411CAE	ECN2412CAB ECN2412CAC ECN2412CAD ECN2412CAE	ECN2414CAB ECN2414CAC ECN2414CAD ECN2414CAE	ECN2418CAB ECN2418CAC ECN2418CAD ECN2418CAE	
	575	1 3 5 10		HMCP 3A HMCP 7A HMCP 15A HMCP 30A	ECN2411DAB ECN2411DAC ECN2411DAD ECN2411DAE	ECN2412DAB ECN2412DAC ECN2412DAD ECN2412DAE	ECN2414DAB ECN2414DAC ECN2414DAD ECN2414DAE	ECN2418DAB ECN2418DAC ECN2418DAD ECN2418DAE	
2	200	10	120	HMCPE 50A	ECN2421EAF	ECN2422EAF	ECN2424EAF	ECN2428EAF	AN16GN0AB
	230	10 15		HMCPE 50A HMCPE 70A	ECN2421BAF ECN2421BAW	ECN2422BAF ECN2422BAW	ECN2424BAF ECN2424BAW	ECN2428BAF ECN2428BAW	
	460	25		HMCPE 50A	ECN2421CAF	ECN2422CAF	ECN2424CAF	ECN2428CAF	
	575	15 25		HMCP 30A HMCP 50A	ECN2421CAE ECN2421DAF	ECN2422CAE ECN2422DAF	ECN2424CAE ECN2424DAF	ECN2428CAE ECN2428DAF	

Starters do not include heater packs. Select 1 carton of 3 heater packs. For Heater Pack Selection, see **Page 16-6**.
Starters with Electronic Overload, see **Page 16-45** of Modification Codes.

① For other control power transformer primary and/or secondary voltages, substitute the eighth digit with appropriate digit based on **Table 3-18**.
② All Type 12 enclosures are standardized with external reset. For internal reset, order Mod Code **R5**.
③ Type 12 enclosure is without safety door interlock. When safety door interlock is required, add modification **E11**.
④ 100,000 RMS short-circuit – 480V
25,000 RMS short-circuit – 600V
⑤ The Catalog Numbers listed in the Type 4X column are for Type 4X 304-Grade Stainless Steel, as indicated by the seventh digit **4**. Example: ECN2404AAC. To order Type 4X 316-Grade Stainless Steel, change that digit to **9**. To order Type 4 Painted Steel, change that digit to **3**. To order Nonmetallic, change that digit to **5**. For details on these Alternate Enclosures, see **Tab 14**.

Cover Control ..... **Page 3-21**
Other Magnet Coils ..... **Page 3-20**
Dimensions ..... **Page 15-2**
Accessories ..... **Page 16-4**
Modifications ..... **Page 16-40**
Technical Data ..... **Page 18-7**

Table 3-41. Class ECN24 — Combination Non-reversing Starter — Circuit Breaker with CPT ④ (Continued)

NEMA Size	Motor Voltage	Max. hp Rating	Magnet Coil Voltage ①	Circuit Breaker Type	Type 1 General Purpose Catalog Number	Type 3R Rainproof Catalog Number	Type 4X ⑦ Watertight & Dust-Tight Stainless Steel Catalog Number	Type 12 Dust-Tight Industrial External Reset ②③ Catalog Number	Component Starter (Open) Catalog Number
3	200	20 25	120	HMCPE 100A HMCPE 100A	ECN2431EAG ECN2431EAX	ECN2432EAG ECN2432EAX	ECN2434EAG ECN2434EAX	ECN2438EAG ECN2438EAX	AN16KN0A
	230	25 30		HMCPE 100A HMCPE 100A	ECN2431BAG ECN2431BAX	ECN2432BAG ECN2432BAX	ECN2434BAG ECN2434BAX	ECN2438BAG ECN2438BAX	
	460	50		HMCPE 100A	ECN2431CAG	ECN2432CAG	ECN2434CAG	ECN2438CAG	
	575	30 50		HMCP 50A HMCP 100A	ECN2431DAF ECN2431DAG	ECN2432DAF ECN2432DAG	ECN2434DAF ECN2434DAG	ECN2438DAF ECN2438DAG	
4	200 230 460 575	40 50 100 100	120	HMCP 150A HMCP 150A HMCP 150A HMCP 150A	ECN2441EAH ECN2441BAH ECN2441CAH ECN2441DAH	ECN2442EAH ECN2442BAH ECN2442CAH ECN2442DAH	ECN2444EAH ECN2444BAH ECN2444CAH ECN2444DAH	ECN2448EAH ECN2448BAH ECN2448CAH ECN2448DAH	AN16NN0A
5	200	50 75	120	HMCP 250A HMCP 400A	ECN2451EAJ ECN2451EAK	ECN2452EAJ ECN2452EAK	ECN2454EAJ ECN2454EAK	ECN2458EAJ ECN2458EAK	AN16SN0AB
	230	60 100		HMCP 250A HMCP 400A	ECN2451BAJ ECN2451BAK	ECN2452BAJ ECN2452BAK	ECN2454BAJ ECN2454BAK	ECN2458BAJ ECN2458BAK	
	460	125 200		HMCP 250A HMCP 400A	ECN2451CAJ ECN2451CAK	ECN2452CAJ ECN2452CAK	ECN2454CAJ ECN2454CAK	ECN2458CAJ ECN2458CAK	
	575	150 200		HMCP 250A HMCP 400A	ECN2451DAJ ECN2451DAK	ECN2452DAJ ECN2452DAK	ECN2454DAJ ECN2454DAK	ECN2458DAJ ECN2458DAK	
6	200	150	120	HMCP 600A	ECN2461EAL	ECN2462EAL	ECN2463EAL ⑤	ECN2468EAL	AN16TN0AB
	230	200		HMCP 600A	ECN2461BAL	ECN2462BAL	ECN2463BAL ⑤	ECN2468BAL	
	460	350 400		HMCP 600A HMCP 1200A	ECN2461CAL ECN2461CAP	ECN2462CAL ECN2462CAP	ECN2463CAL ⑤ ECN2463CAP ⑤	ECN2468CAL ECN2468CAP	
	575	400		HMCP 600A	ECN2461DAL	ECN2462DAL	ECN2463DAL ⑤	ECN2468DAL	
7	230 460 575	300 600 600	120	— — —	ECN2471BAU ⑥ ECN2471CAU ⑥ ECN2471DAU ⑥	ECN2472BAU ⑥ ECN2472CAU ⑥ ECN2472DAU ⑥	ECN2473BAU ⑤⑥ ECN2473CAU ⑤⑥ ECN2473DAU ⑤⑥	ECN2478BAU ⑥ ECN2478CAU ⑥ ECN2478DAU ⑥	AN16UN0AB
8	230 460 575	450 900 900	120	— — —	ECN2481BAU ⑥ ECN2481CAU ⑥ ECN2481DAU ⑥	ECN2482BAU ⑥ ECN2482CAU ⑥ ECN2482DAU ⑥	ECN2483BAU ⑤⑥ ECN2483CAU ⑤⑥ ECN2483DAU ⑤⑥	ECN2488BAU ⑥ ECN2488CAU ⑥ ECN2488DAU ⑥	AN16VN0AB
9	230 460 575	800 1600 1600	120	— — —	ECN2491BAU ⑥ ECN2491CAU ⑥ ECN2491DAU ⑥	ECN2492BAU ⑥ ECN2492CAU ⑥ ECN2492DAU ⑥	ECN2493BAU ⑤⑥ ECN2493CAU ⑤⑥ ECN2493DAU ⑤⑥	ECN2498BAU ⑥ ECN2498CAU ⑥ ECN2498DAU ⑥	AN16WN0A

Starters do not include heater packs. Select 1 carton of 3 heater packs. For Heater Pack Selection, see **Page 16-6**.
Starters with Electronic Overload, see **Page 16-45** of Modification Codes.

① For other control power transformer primary and/or secondary voltages, substitute the eighth digit with appropriate digit based on **Table 3-18**.
② All Type 12 enclosures are standardized with external reset. For internal reset, order Mod Code **R5**.
③ Type 12 enclosure is without safety door interlock. When safety door interlock is required, add modification **E11**.
④ 100,000 RMS short-circuit – 480V
25,000 RMS short-circuit – 600V
⑤ Type 4 (Painted steel) Sizes 6 – 9.
⑥ Provide FLA to size disconnect properly.
⑦ The Catalog Numbers listed in the Type 4X column are for Type 4X 304-Grade Stainless Steel, as indicated by the seventh digit **4**. Example: ECN2404AAC. To order Type 4X 316-Grade Stainless Steel, change that digit to **9**. To order Type 4 Painted Steel, change that digit to **3**. To order Nonmetallic, change that digit to **5**. For details on these Alternate Enclosures, see **Tab 14**.

Cover Control ..... **Page 3-21**
Other Magnet Coils ..... **Page 3-20**
Dimensions ..... **Page 15-2**
Accessories ..... **Page 16-4**
Modifications ..... **Page 16-40**
Technical Data ..... **Page 18-7**

Wiring Diagrams

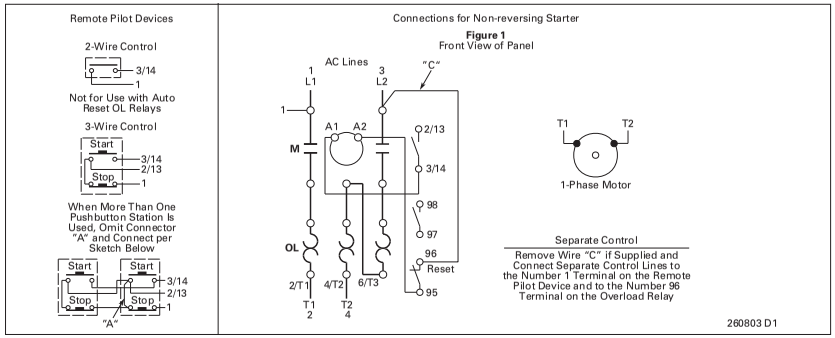

Figure 3-3. Non-reversing Starter — Single-Phase Non-combination

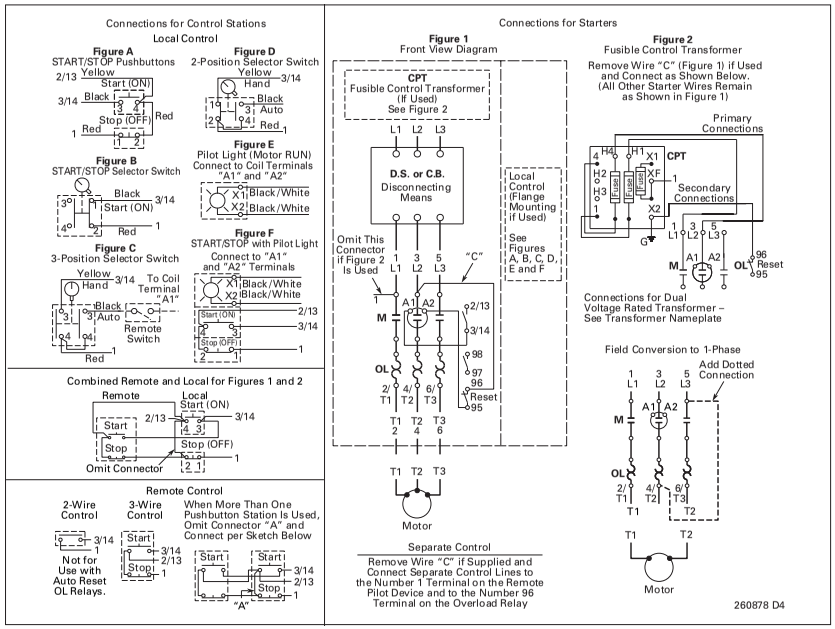

Figure 3-4. Non-reversing Starter — Combination

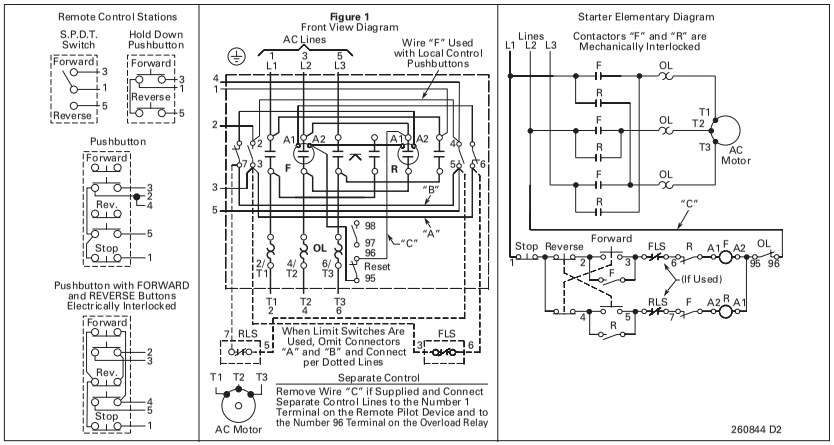

Figure 3-5. Reversing Starter — Non-combination

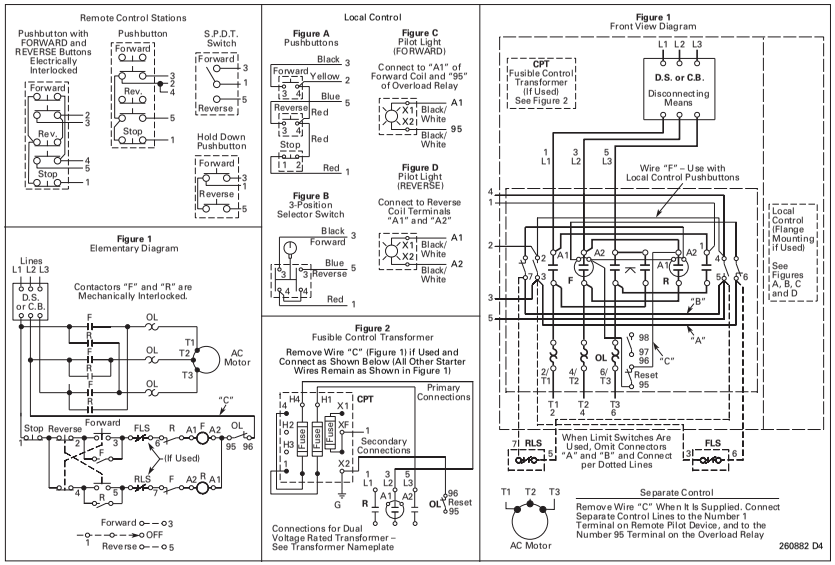

Figure 3-6. Reversing Starter — Combination

Non-reversing Cover Control

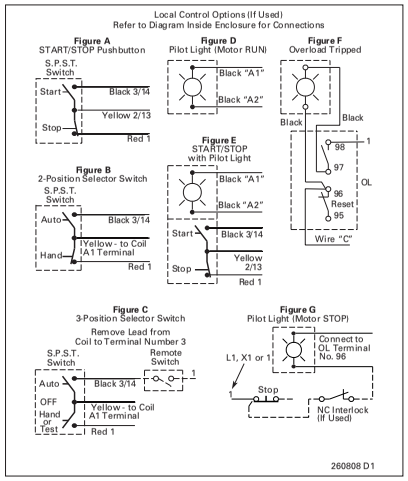

Figure 3-7. Type 1 C400GK Control Options

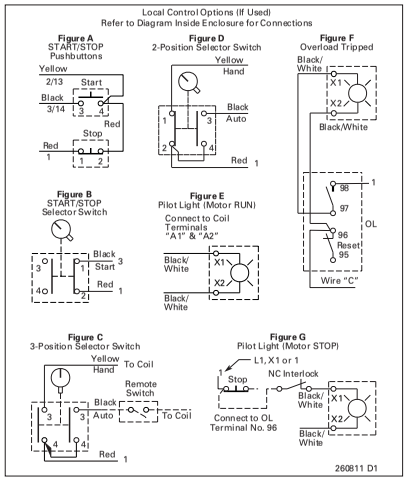

Figure 3-8. C400T Control Options

Reversing Cover Control

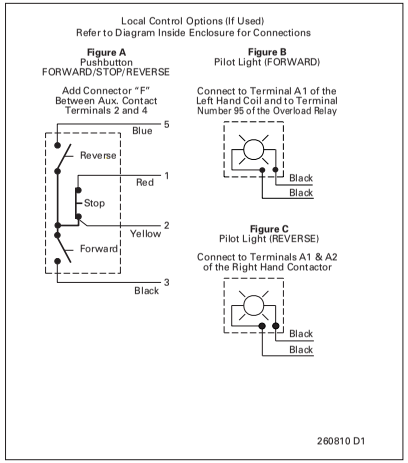

Figure 3-9. Type 1 C400GR Control Options

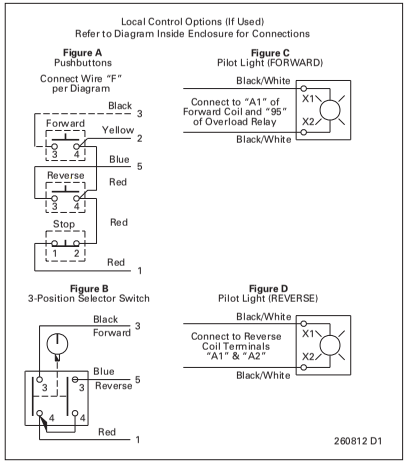

Figure 3-10. C400T Control Options

Product Selection

Table 3-42. Class EC216 — Combination Non-reversing Starter — Fusible Disconnect ①

NEMA Size	Motor Voltage	Max. hp Rating Dual Element Fuses	Magnet Coil Voltage	Fuse Clip Amps	Type 1 General Purpose	Type 3R Rainproof	Type 4X ④ Watertight & Dust-Tight Stainless Steel	Type 12 Dust-Tight Industrial External Reset ②③	Component Starter (Open)
					Catalog Number	Catalog Number	Catalog Number	Catalog Number	Catalog Number
00	—	—	120	30A	**EC216A1AAB**	**EC216A2AAB**	**EC216A4AAB**	**EC216A8AAB**	**A200MACAC**
	200	1-1/2	208		**EC216A1EAB**	**EC216A2EAB**	**EC216A4EAB**	**EC216A8EAB**	**A200MACB**
	230	1-1/2	240		**EC216A1BAB**	**EC216A2BAB**	**EC216A4BAB**	**EC216A8BAB**	**A200MACW**
	460	2	480		**EC216A1CAC**	**EC216A2CAC**	**EC216A4CAC**	**EC216A8CAC**	**A200MACX**
	575	2	600		**EC216A1DAC**	**EC216A2DAC**	**EC216A4DAC**	**EC216A8DAC**	**A200MACE**
0	—	—	120	30A	**EC21601AAB**	**EC21602AAB**	**EC21604AAB**	**EC21608AAB**	**A200M0CAC**
	200	3	208		**EC21601EAB**	**EC21602EAB**	**EC21604EAB**	**EC21608EAB**	**A200M0CB**
	230	3	240		**EC21601BAB**	**EC21602BAB**	**EC21604BAB**	**EC21608BAB**	**A200M0CW**
	460	5	480		**EC21601CAC**	**EC21602CAC**	**EC21604CAC**	**EC21608CAC**	**A200M0CX**
	575	5	600		**EC21601DAC**	**EC21602DAC**	**EC21604DAC**	**EC21608DAC**	**A200M0CE**
1	—	—	120	30A	**EC21611AAB**	**EC21612AAB**	**EC21614AAB**	**EC21618AAB**	**A200M1CAC**
	200	7-1/2	208		**EC21611EAB**	**EC21612EAB**	**EC21614EAB**	**EC21618EAB**	**A200M1CB**
	230	7-1/2	240		**EC21611BAB**	**EC21612BAB**	**EC21614BAB**	**EC21618BAB**	**A200M1CW**
	460	10	480		**EC21611CAC**	**EC21612CAC**	**EC21614CAC**	**EC21618CAC**	**A200M1CX**
	575	10	600		**EC21611DAC**	**EC21612DAC**	**EC21614DAC**	**EC21618DAC**	**A200M1CE**
2	—	—	120	60A	**EC21621AAD**	**EC21622AAD**	**EC21624AAD**	**EC21628AAD**	**A200M2CAC**
	200	10	208		**EC21621EAD**	**EC21622EAD**	**EC21624EAD**	**EC21628EAD**	**A200M2CB**
	230	15	240		**EC21621BAD**	**EC21622BAD**	**EC21624BAD**	**EC21628BAD**	**A200M2CW**
	460	25	480		**EC21621CAE**	**EC21622CAE**	**EC21624CAE**	**EC21628CAE**	**A200M2CX**
	575	25	600		**EC21621DAE**	**EC21622DAE**	**EC21624DAE**	**EC21628DAE**	**A200M2CE**
3	—	—	120	100A	**EC21631AAF**	**EC21632AAF**	**EC21634AAF**	**EC21638AAF**	**A200M3CAC**
	200	25	208		**EC21631EAF**	**EC21632EAF**	**EC21634EAF**	**EC21638EAF**	**A200M3CB**
	230	30	240		**EC21631BAF**	**EC21632BAF**	**EC21634BAF**	**EC21638BAF**	**A200M3CW**
	460	50	480		**EC21631CAG**	**EC21632CAG**	**EC21634CAG**	**EC21638CAG**	**A200M3CX**
	575	50	600		**EC21631DAG**	**EC21632DAG**	**EC21634DAG**	**EC21638DAG**	**A200M3CE**
4	—	—	120	200A	**EC21641AAH**	**EC21642AAH**	**EC21644AAH**	**EC21648AAH**	**A200M4CAC**
	200	40	208		**EC21641EAH**	**EC21642EAH**	**EC21644EAH**	**EC21648EAH**	**A200M4CB**
	230	50	240		**EC21641BAH**	**EC21642BAH**	**EC21644BAH**	**EC21648BAH**	**A200M4CW**
	460	100	480		**EC21641CAJ**	**EC21642CAJ**	**EC21644CAJ**	**EC21648CAJ**	**A200M4CX**
	575	100	600		**EC21641DAJ**	**EC21642DAJ**	**EC21644DAJ**	**EC21648DAJ**	**A200M4CE**
Starters do not include heater packs. Order quantity of 3 heater packs. For Heater Pack Selection, see **Page 16-19**.									

① For Ambient Compensated Overload Relay with Auto-Reset, add suffix **D**.
② All Type 12 enclosures are standardized with external reset. For internal reset, order Mod Code **R5**.
③ Type 12 enclosure is without safety door interlock. When safety door interlock is required, add modification **E11**.
④ The Catalog Numbers listed in the Type 4X column are for Type 4X 304-Grade Stainless Steel, as indicated by the seventh digit **4**. Example: EC21604EAB. To order Type 4X 316-Grade Stainless Steel, change that digit to **9**. To order Type 4 Painted Steel, change that digit to **3**. To order Nonmetallic, change that digit to **5**. For details on these Alternate Enclosures, see **Tab 14**.

Cover Control ..... **Page 3-21**
Dimensions ..... **Page 15-2**
Accessories ..... **Page 16-18**
Modifications ..... **Page 16-40**
Renewal Parts ..... **Page 17-8**
Technical Data **CA08102001E**

Table 3-42. Class EC216 — Combination Non-reversing Starter — Fusible Disconnect (Continued) ①

NEMA Size	Motor Voltage	Max. hp Rating Dual Element Fuses	Magnet Coil Voltage	Fuse Clip Amps	Type 1 General Purpose Catalog Number	Type 3R Rainproof Catalog Number	Type 4X ⑥ Watertight & Dust-Tight Stainless Steel Catalog Number	Type 12 Dust-Tight Industrial External Reset ②③ Catalog Number	Component Starter (Open) Catalog Number
5	—	—	120	400A	EC21651AAK	EC21652AAK	EC21654AAK	EC21658AAK	A200M5CAC
	200	75	208		EC21651EAK	EC21652EAK	EC21654EAK	EC21658EAK	A200M5CB
	230	100	240		EC21651BAK	EC21652BAK	EC21654BAK	EC21658BAK	A200M5CW
	460	200	480		EC21651CAL	EC21652CAL	EC21654CAL	EC21658CAL	A200M5CX
	575	200	600		EC21651DAL	EC21652DAL	EC21654DAL	EC21658DAL	A200M5CE
6	—	—	120	600A	EC21661AAM	EC21662AAM	EC21663AAM ④	EC21668AAM	A200M6CAC
	200	150	208		EC21661EAM	EC21662EAM	EC21663EAM ④	EC21668EAM	A200M6CB
	230	200	240		EC21661BAM	EC21662BAM	EC21663BAM ④	EC21668BAM	A200M6CW
	460	400	480		EC21661CAN	EC21662CAN	EC21663CAN ④	EC21668CAN	A200M6CX
	575	400	600		EC21661DAN	EC21662DAN	EC21663DAN ④	EC21668DAN	A200M6CE
7	—	—	120	⑤	EC21671AAU	EC21672AAU	EC21673AAU ④	EC21678AAU	A200M7CJ
	230	300	240		EC21671BAU	EC21672BAU	EC21673BAU ④	EC21678BAU	A200M7CW
	460	600	480		EC21671CAU	EC21672CAU	EC21673CAU ④	EC21678CAU	A200M7CX
	575	600	600		EC21671DAU	EC21672DAU	EC21673DAU ④	EC21678DAU	A200M7CE
8	—	—	120	⑤	EC21681AAU	EC21682AAU	EC21683AAU ④	EC21688AAU	A200M8CJ
	230	450	240		EC21681BAU	EC21682BAU	EC21683BAU ④	EC21688BAU	A200M8CW
	460	900	480		EC21681CAU	EC21682CAU	EC21683CAU ④	EC21688CAU	A200M8CX
	575	900	600		EC21681DAU	EC21682DAU	EC21683DAU ④	EC21688DAU	A200M8CE
9	—	—	120	⑤	EC21691AAU	EC21692AAU	EC21693AAU ④	EC21698AAU	A200M9CJ
	230	800	240		EC21691BAU	EC21692BAU	EC21693BAU ④	EC21698BAU	A200M9CW
	460	1000 ⑤	480		EC21691CAU	EC21692CAU	EC21693CAU ④	EC21698CAU	A200M9CX
	575	1000	600		EC21691DAU	EC21692DAU	EC21693DAU ④	EC21698DAU	A200M9CE

Starters do not include heater packs. Order quantity of 3 heater packs. For Heater Pack Selection, see **Page 16-19**.

① For Ambient Compensated Overload Relay with Auto-Reset, add suffix **D**.
② All Type 12 enclosures are standardized with external reset. For internal reset, order Mod Code **R5**.
③ Type 12 enclosure is without safety door interlock. When safety door interlock is required, add modification **E11**.
④ Type 4 (Painted steel) Sizes 6 – 9.
⑤ Contact Eaton.
⑥ The Catalog Numbers listed in the Type 4X column are for Type 4X 304-Grade Stainless Steel, as indicated by the seventh digit **4**. Example: EC21604EAB. To order Type 4X 316-Grade Stainless Steel, change that digit to **9**. To order Type 4 Painted Steel, change that digit to **3**. To order Nonmetallic, change that digit to **5**. For details on these Alternate Enclosures, see **Tab 14**.

Cover Control ..... **Page 3-21**
Dimensions ..... **Page 15-2**
Accessories ..... **Page 16-18**
Modifications ..... **Page 16-40**
Renewal Parts ..... **Page 17-8**
Technical Data **CA08102001E**

Table 3-43. Class EC218 — Combination Reversing Starter — Fusible Disconnect with CPT ①

NEMA Size	Motor Voltage	Max. hp Rating Dual Element Fuses	Magnet Coil Voltage	Fuse Clip Amps	Type 1 General Purpose Catalog Number	Type 3R Rainproof Catalog Number	Type 4X ④ Watertight & Dust-Tight Stainless Steel Catalog Number	Type 12 Dust-Tight Industrial External Reset ②③ Catalog Number	Component Starter (Open) Catalog Number
00	—	—	120	30A	EC218A1AAB	EC218A2AAB	EC218A4AAB	EC218A8AAB	A200MACAC
	200	1-1/2	208		EC218A1EAB	EC218A2EAB	EC218A4EAB	EC218A8EAB	A200MACB
	230	1-1/2	240		EC218A1BAB	EC218A2BAB	EC218A4BAB	EC218A8BAB	A200MACW
	460	2	480		EC218A1CAC	EC218A2CAC	EC218A4CAC	EC218A8CAC	A200MACX
	575	2	600		EC218A1DAC	EC218A2DAC	EC218A4DAC	EC218A8DAC	A200MACE
0	—	—	120	30A	EC21801AAB	EC21802AAB	EC21804AAB	EC21808AAB	A200M0CAC
	200	3	208		EC21801EAB	EC21802EAB	EC21804EAB	EC21808EAB	A200M0CB
	230	3	240		EC21801BAB	EC21802BAB	EC21804BAB	EC21808BAB	A200M0CW
	460	5	480		EC21801CAC	EC21802CAC	EC21804CAC	EC21808CAC	A200M0CX
	575	5	600		EC21801DAC	EC21802DAC	EC21804DAC	EC21808DAC	A200M0CE
1	—	—	120	30A	EC21811AAB	EC21812AAB	EC21814AAB	EC21818AAB	A200M1CAC
	200	7-1/2	208		EC21811EAB	EC21812EAB	EC21814EAB	EC21818EAB	A200M1CB
	230	7-1/2	240		EC21811BAB	EC21812BAB	EC21814BAB	EC21818BAB	A200M1CW
	460	10	480		EC21811CAC	EC21812CAC	EC21814CAC	EC21818CAC	A200M1CX
	575	10	600		EC21811DAC	EC21812DAC	EC21814DAC	EC21818DAC	A200M1CE
2	—	—	120	60A	EC21821AAD	EC21822AAD	EC21824AAD	EC21828AAD	A200M2CAC
	200	10	208		EC21821EAD	EC21822EAD	EC21824EAD	EC21828EAD	A200M2CB
	230	15	240		EC21821BAD	EC21822BAD	EC21824BAD	EC21828BAD	A200M2CW
	460	25	480		EC21821CAE	EC21822CAE	EC21824CAE	EC21828CAE	A200M2CX
	575	25	600		EC21821DAE	EC21822DAE	EC21824DAE	EC21828DAE	A200M2CE
3	—	—	120	100A	EC21831AAF	EC21832AAF	EC21834AAF	EC21838AAF	A200M3CAC
	200	25	208		EC21831EAF	EC21832EAF	EC21834EAF	EC21838EAF	A200M3CB
	230	30	240		EC21831BAF	EC21832BAF	EC21834BAF	EC21838BAF	A200M3CW
	460	50	480		EC21831CAG	EC21832CAG	EC21834CAG	EC21838CAG	A200M3CX
	575	50	600		EC21831DAG	EC21832DAG	EC21834DAG	EC21838DAG	A200M3CE
4	—	—	120	200A	EC21841AAH	EC21842AAH	EC21844AAH	EC21848AAH	A200M4CAC
	200	40	208		EC21841EAH	EC21842EAH	EC21844EAH	EC21848EAH	A200M4CB
	230	50	240		EC21841BAH	EC21842BAH	EC21844BAH	EC21848BAH	A200M4CW
	460	100	480		EC21841CAJ	EC21842CAJ	EC21844CAJ	EC21848CAJ	A200M4CX
	575	100	600		EC21841DAJ	EC21842DAJ	EC21844DAJ	EC21848DAJ	A200M4CE

Starters do not include heater packs. Order quantity of 3 heater packs. For Heater Pack Selection, see **Page 16-19**.

① For Ambient Compensated Overload Relay with Auto-Reset, add suffix **D**.
② All Type 12 enclosures are standardized with external reset. For internal reset, order Mod Code **R5**.
③ Type 12 enclosure is without safety door interlock. When safety door interlock is required, add modification **E11**.
④ The Catalog Numbers listed in the Type 4X column are for Type 4X 304-Grade Stainless Steel, as indicated by the seventh digit **4**. Example: EC21804EAB. To order Type 4X 316-Grade Stainless Steel, change that digit to **9**. To order Type 4 Painted Steel, change that digit to **3**. To order Nonmetallic, change that digit to **5**. For details on these Alternate Enclosures, see **Tab 14**.

Cover Control ..... **Page 3-21**
Dimensions ..... **Page 15-2**
Accessories ..... **Page 16-18**
Modifications ..... **Page 16-40**
Renewal Parts ..... **Page 17-8**
Technical Data **CA08102001E**

Table 3-43. Class EC218 — Combination Reversing Starter — Fusible Disconnect with CPT (Continued) ①

NEMA Size	Motor Voltage	Max. hp Rating Dual Element Fuses	Magnet Coil Voltage 1	Fuse Clip Amps	Type 1 General Purpose Catalog Number	Type 3R Rainproof Catalog Number	Type 4X ⑥ Watertight & Dust-Tight Stainless Steel Catalog Number	Type 12 Dust-Tight Industrial External Reset ②③ Catalog Number	Component Starter (Open) Catalog Number
5	—	—	120	400A	EC21851AAK	EC21852AAK	EC21854AAK	EC21858AAK	A200M5CAC
	200	75	208		EC21851EAK	EC21852EAK	EC21854EAK	EC21858EAK	A200M5CB
	230	100	240		EC21851BAK	EC21852BAK	EC21854BAK	EC21858BAK	A200M5CW
	460	200	480		EC21851CAL	EC21852CAL	EC21854CAL	EC21858CAL	A200M5CX
	575	200	600		EC21851DAL	EC21852DAL	EC21854DAL	EC21858DAL	A200M5CE
6	—	—	120	600A	EC21861AAM	EC21862AAM	EC21863AAM ④	EC21868AAM	A200M6CAC
	200	150	208		EC21861EAM	EC21862EAM	EC21863EAM ④	EC21868EAM	A200M6CB
	230	200	240		EC21861BAM	EC21862BAM	EC21863BAM ④	EC21868BAM	A200M6CW
	460	400	480		EC21861CAN	EC21862CAN	EC21863CAN ④	EC21868CAN	A200M6CX
	575	400	600		EC21861DAN	EC21862DAN	EC21863DAN ④	EC21868DAN	A200M6CE
7	—	—	120	⑤	EC21871AAU	EC21872AAU	EC21873AAU ④	EC21878AAU	A200M7CJ
	230	300	240		EC21871BAU	EC21872BAU	EC21873BAU ④	EC21878BAU	A200M7CW
	460	600	480		EC21871CAU	EC21872CAU	EC21873CAU ④	EC21878CAU	A200M7CX
	575	600	600		EC21871DAU	EC21872DAU	EC21873DAU ④	EC21878DAU	A200M7CE
8	—	—	120	⑤	EC21881AAU	EC21882AAU	EC21883AAU ④	EC21888AAU	A200M8CJ
	230	450	240		EC21881BAU	EC21882BAU	EC21883BAU ④	EC21888BAU	A200M8CW
	460	900	480		EC21881CAU	EC21882CAU	EC21883CAU ④	EC21888CAU	A200M8CX
	575	900	600		EC21881DAU	EC21882DAU	EC21883DAU ④	EC21888DAU	A200M8CE
9	—	—	120	⑤	EC21891AAU	EC21892AAU	EC21893AAU ④	EC21898AAU	A200M9CJ
	230	800	240		EC21891BAU	EC21892BAU	EC21893BAU ④	EC21898BAU	A200M9CW
	460	1000 ⑤	480		EC21891CAU	EC21892CAU	EC21893CAU ④	EC21898CAU	A200M9CX
	575	1000	600		EC21891DAU	EC21892DAU	EC21893DAU ④	EC21898DAU	A200M9CE

Starters do not include heater packs. Order quantity of 3 heater packs. For Heater Pack Selection, see **Page 16-19**.

① For Ambient Compensated Overload Relay with Auto-Reset, add suffix **D**.
② All Type 12 enclosures are standardized with external reset. For internal reset, order Mod Code **R5**.
③ Type 12 enclosure is without safety door interlock. When safety door interlock is required, add modification **E11**.
④ Type 4 (Painted steel) Sizes 6 – 9.
⑤ Contact Eaton.
⑥ The Catalog Numbers listed in the Type 4X column are for Type 4X 304-Grade Stainless Steel, as indicated by the seventh digit **4**. Example: EC21804EAB. To order Type 4X 316-Grade Stainless Steel, change that digit to **9**. To order Type 4 Painted Steel, change that digit to **3**. To order Nonmetallic, change that digit to **5**. For details on these Alternate Enclosures, see **Tab 14**.

Cover Control ..... **Page 3-21**
Dimensions ..... **Page 15-2**
Accessories ..... **Page 16-18**
Modifications ..... **Page 16-40**
Renewal Parts ..... **Page 17-8**
Technical Data **CA08102001E**

Table 3-44. Class EC222 — Combination Non-reversing Starter — Circuit Breaker ②

NEMA Size	Motor Voltage	Max. hp Rating Dual Element Fuses	Magnet Coil Voltage ①	Circuit Breaker Type	Type 1 General Purpose Catalog Number	Type 3R Rainproof Catalog Number	Type 4X ⑤ Watertight & Dust-Tight Stainless Steel Catalog Number	Type 12 Dust-Tight Industrial External Reset ③④ Catalog Number	Component Starter (Open) Catalog Number
00	200	1	120	HMCPE 7A	EC222A1AAC	EC222A2AAC	EC222A4AAC	EC222A8AAC	A200MACAC
		1-1/2		HMCPE 15A	EC222A1AAD	EC222A2AAD	EC222A4AAD	EC222A8AAD	
	230	1		HMCPE 7A	EC222A1AAC	EC222A2AAC	EC222A4AAC	EC222A8AAC	
		1-1/2		HMCPE 15A	EC222A1AAD	EC222A2AAD	EC222A4AAD	EC222A8AAD	
	460	1		HMCPE 3A	EC222A1AAB	EC222A2AAB	EC222A4AAB	EC222A8AAB	
		2		HMCPE 7A	EC222A1AAC	EC222A2AAC	EC222A4AAC	EC222A8AAC	
	575	1		HMCP 3A	EC222A1AAB	EC222A2AAB	EC222A4AAB	EC222A8AAB	
		2		HMCP 7A	EC222A1AAC	EC222A2AAC	EC222A4AAC	EC222A8AAC	
0	200	1	120	HMCPE 7A	EC22201AAC	EC22202AAC	EC22204AAC	EC22208AAC	A200M0CAC
		3		HMCPE 15A	EC22201AAD	EC22202AAD	EC22204AAD	EC22208AAD	
	230	1		HMCPE 7A	EC22201AAC	EC22202AAC	EC22204AAC	EC22208AAC	
		3		HMCPE 15A	EC22201AAD	EC22202AAD	EC22204AAD	EC22208AAD	
	460	1		HMCPE 3A	EC22201AAB	EC22202AAB	EC22204AAB	EC22208AAB	
		3		HMCPE 7A	EC22201AAC	EC22202AAC	EC22204AAC	EC22208AAC	
		5		HMCPE 15A	EC22201AAD	EC22202AAD	EC22204AAD	EC22208AAD	
	575	1		HMCPE 3A	EC22201AAB	EC22202AAB	EC22204AAB	EC22208AAB	
		3		HMCPE 15A	EC22201AAD	EC22202AAD	EC22204AAD	EC22208AAD	
		5		HMCPE 7A	EC22201AAC	EC22202AAC	EC22204AAC	EC22208AAC	
1	200	1	120	HMCPE 7A	EC22211AAC	EC22212AAC	EC22214AAC	EC22218AAC	A200M1CAC
		3		HMCPE 15A	EC22211AAD	EC22212AAD	EC22214AAD	EC22218AAD	
		5		HMCPE 30A	EC22211AAE	EC22212AAE	EC22214AAE	EC22218AAE	
		7-1/2		HMCPE 50A	EC22211AAF	EC22212AAF	EC22214AAF	EC22218AAF	
	230	1		HMCPE 7A	EC22211AAC	EC22212AAC	EC22214AAC	EC22218AAC	
		3		HMCPE 15A	EC22211AAD	EC22212AAD	EC22214AAD	EC22218AAD	
		5		HMCPE 30A	EC22211AAE	EC22212AAE	EC22214AAE	EC22218AAE	
		7-1/2		HMCPE 50A	EC22211AAF	EC22212AAF	EC22214AAF	EC22218AAF	
	460	1		HMCPE 3A	EC22211AAB	EC22212AAB	EC22214AAB	EC22218AAB	
		3		HMCPE 7A	EC22211AAC	EC22212AAC	EC22214AAC	EC22218AAC	
		5		HMCPE 15A	EC22211AAD	EC22212AAD	EC22214AAD	EC22218AAD	
		10		HMCPE 30A	EC22211AAE	EC22212AAE	EC22214AAE	EC22218AAE	
	575	1		HMCPE 3A	EC22211AAB	EC22212AAB	EC22214AAB	EC22218AAB	
		3		HMCPE 7A	EC22211AAC	EC22212AAC	EC22214AAC	EC22218AAC	
		5		HMCPE 15A	EC22211AAD	EC22212AAD	EC22214AAD	EC22218AAD	
		10		HMCPE 30A	EC22211AAE	EC22212AAE	EC22214AAE	EC22218AAE	

Starters do not include heater packs. Order quantity of 3 heater packs. For Heater Pack Selection, see **Page 16-19**.

① For other magnet coil voltages substitute the eighth digit with appropriate digit based on **Table 3-17**.
② For Ambient Compensated Overload Relay with Auto-Reset, add suffix **D**.
③ All Type 12 enclosures are standardized with external reset. For internal reset, order Mod Code **R5**.
④ Type 12 enclosure is without safety door interlock. When safety door interlock is required, add modification **E11**.
⑤ The Catalog Numbers listed in the Type 4X column are for Type 4X 304-Grade Stainless Steel, as indicated by the seventh digit **4**. Example: EC22204AAB. To order Type 4X 316-Grade Stainless Steel, change that digit to **9**. To order Type 4 Painted Steel, change that digit to **3**. To order Nonmetallic, change that digit to **5**. For details on these Alternate Enclosures, see **Tab 14**.

Cover Control ..... **Page 3-21**
Dimensions ..... **Page 15-2**
Accessories ..... **Page 16-18**
Modifications ..... **Page 16-40**
Renewal Parts ..... **Page 17-8**
Technical Data **CA08102001E**

Table 3-44. Class EC222 — Combination Non-reversing Starter — Circuit Breaker (Continued) ②

NEMA Size	Motor Voltage	Max. hp Rating Dual Element Fuses	Magnet Coil Voltage ①	Circuit Breaker Type	Type 1 General Purpose Catalog Number	Type 3R Rainproof Catalog Number	Type 4X ⑥ Watertight & Dust-Tight Stainless Steel Catalog Number	Type 12 Dust-Tight Industrial External Reset ③④ Catalog Number	Component Starter (Open) Catalog Number
2	200	10	120	HMCPE 50A	EC22221AAF	EC22222AAF	EC22224AAF	EC22228AAF	A200M2CAC
	230	10 15		HMCPE 50A HMCPE 70A	EC22221AAF EC22221AAW	EC22222AAF EC22222AAW	EC22224AAF EC22224AAW	EC22228AAF EC22228AAW	
	460	25		HMCPE 50A	EC22221AAF	EC22222AAF	EC22224AAF	EC22228AAF	
	575	15 25		HMCP 30A HMCP 50A	EC22221AAE EC22221AAF	EC22222AAE EC22222AAF	EC22224AAE EC22224AAF	EC22228AAE EC22228AAF	
3	200	20 25	120	HMCPE 100A HMCPE 100A	EC22231AAG EC22231AAX	EC22232AAG EC22232AAX	EC22234AAG EC22234AAX	EC22238AAG EC22238AAX	A200M3CAC
	230	25 30		HMCPE 100A HMCPE 100A	EC22231AAG EC22231AAX	EC22232AAG EC22232AAX	EC22234AAG EC22234AAX	EC22238AAG EC22238AAX	
	460	50		HMCPE 100A	EC22231AAG	EC22232AAG	EC22234AAG	EC22238AAG	
	575	30 50		HMCP 50A HMCP 100A	EC22231AAF EC22231AAG	EC22232AAF EC22232AAG	EC22234AAF EC22234AAG	EC22238AAF EC22238AAG	
4	200 230 460 575	40 50 100 100	120	HMCP 150A HMCP 150A HMCP 150A HMCP 150A	EC22241AAH EC22241AAH EC22241AAH EC22241AAH	EC22242AAH EC22242AAH EC22242AAH EC22242AAH	EC22244AAH EC22244AAH EC22244AAH EC22244AAH	EC22248AAH EC22248AAH EC22248AAH EC22248AAH	A200M4CAC
5	200	50 75	120	HMCP 250A HMCP 400A	EC22251AAJ EC22251AAK	EC22252AAJ EC22252AAK	EC22254AAJ EC22254AAK	EC22258AAJ EC22258AAK	A200M5CAC
	230	60 100		HMCP 250A HMCP 400A	EC22251AAJ EC22251AAK	EC22252AAJ EC22252AAK	EC22254AAJ EC22254AAK	EC22258AAJ EC22258AAK	
	460	125 200		HMCP 250A HMCP 400A	EC22251AAJ EC22251AAK	EC22252AAJ EC22252AAK	EC22254AAJ EC22254AAK	EC22258AAJ EC22258AAK	
	575	150 200		HMCP 250A HMCP 400A	EC22251AAJ EC22251AAK	EC22252AAJ EC22252AAK	EC22254AAJ EC22254AAK	EC22258AAJ EC22258AAK	
6	200	150	120	HMCP 600A	EC22261AAL	EC22262AAL	EC22263AAL ⑤	EC22268AAL	A200M6CAC
	230	200		HMCP 600A	EC22261AAL	EC22262AAL	EC22263AAL ⑤	EC22268AAL	
	460	350 400		HMCP 600A HMCP 1200A	EC22261AAL EC22261AAP	EC22262AAL EC22262AAP	EC22263AAL ⑤ EC22263AAP ⑤	EC22268AAL EC22268AAP	
	575	400		HMCP 600A	EC22261AAL	EC22262AAL	EC22263AAL ⑤	EC22268AAL	

Starters do not include heater packs. Order quantity of 3 heater packs. For Heater Pack Selection, see **Page 16-19**.

① For other magnet coil voltages substitute the eighth digit with appropriate digit based on **Table 3-17**.
② For Ambient Compensated Overload Relay with Auto-Reset, add suffix **D**.
③ All Type 12 enclosures are standardized with external reset. For internal reset, order Mod Code **R5**.
④ Type 12 enclosure is without safety door interlock. When safety door interlock is required, add modification **E11**.
⑤ Type 4 (Painted steel) Size 6.
⑥ The Catalog Numbers listed in the Type 4X column are for Type 4X 304-Grade Stainless Steel, as indicated by the seventh digit **4**. Example: EC22204AAB. To order Type 4X 316-Grade Stainless Steel, change that digit to **9**. To order Type 4 Painted Steel, change that digit to **3**. To order Nonmetallic, change that digit to **5**. For details on these Alternate Enclosures, see **Tab 14**.

Cover Control ..... **Page 3-21**
Dimensions ..... **Page 15-2**
Accessories ..... **Page 16-18**
Modifications ..... **Page 16-40**
Renewal Parts ..... **Page 17-8**
Technical Data **CA08102001E**

Table 3-45. Class EC224 — Combination Non-reversing Starter — Circuit Breaker with CPT ②

NEMA Size	Motor Voltage	Max. hp Rating Dual Element Fuses	Magnet Coil Voltage ①	Circuit Breaker Type	Type 1 General Purpose Catalog Number	Type 3R Rainproof Catalog Number	Type 4X ⑤ Watertight & Dust-Tight Stainless Steel Catalog Number	Type 12 Dust-Tight Industrial External Reset ③④ Catalog Number	Component Starter (Open) Catalog Number
00	200	1 1-1/2	120	HMCPE 7A HMCPE 15A	EC224A1EAC EC224A1EAD	EC224A2EAC EC224A2EAD	EC224A4EAC EC224A4EAD	EC224A8EAC EC224A8EAD	A200MACAC
	230	1 1-1/2		HMCPE 7A HMCPE 15A	EC224A1BAC EC224A1BAD	EC224A2BAC EC224A2BAD	EC224A4BAC EC224A4BAD	EC224A8BAC EC224A8BAD	
	460	1 2		HMCPE 3A HMCPE 7A	EC224A1CAB EC224A1CAC	EC224A2CAB EC224A2CAC	EC224A4CAB EC224A4CAC	EC224A8CAB EC224A8CAC	
	575	1 2		HMCP 3A HMCP 7A	EC224A1DAB EC224A1DAC	EC224A2DAB EC224A2DAC	EC224A4DAB EC224A4DAC	EC224A8DAB EC224A8DAC	
0	200	1 3	120	HMCPE 7A HMCPE 15A	EC22401EAC EC22401EAD	EC22402EAC EC22402EAD	EC22404EAC EC22404EAD	EC22408EAC EC22408EAD	A200M0CAC
	230	1 3		HMCPE 7A HMCPE 15A	EC22401BAC EC22401BAD	EC22402BAC EC22402BAD	EC22404BAC EC22404BAD	EC22408BAC EC22408BAD	
	460	1 3 5		HMCPE 3A HMCPE 7A HMCPE 15A	EC22401CAB EC22401CAC EC22401CAD	EC22402CAB EC22402CAC EC22402CAD	EC22404CAB EC22404CAC EC22404CAD	EC22408CAB EC22408CAC EC22408CAD	
	575	1 3 5		HMCP 3A HMCP 15A HMCP 7A	EC22401DAB EC22401DAD EC22401DAC	EC22402DAB EC22402DAD EC22402DAC	EC22404DAB EC22404DAD EC22404DAC	EC22408DAB EC22408DAD EC22408DAC	
1	200	1 3 5 7-1/2	120	HMCPE 7A HMCPE 15A HMCPE 30A HMCPE 50A	EC22411EAC EC22411EAD EC22411EAE EC22411EAF	EC22412EAC EC22412EAD EC22412EAE EC22412EAF	EC22414EAC EC22414EAD EC22414EAE EC22414EAF	EC22418EAC EC22418EAD EC22418EAE EC22418EAF	A200M1CAC
	230	1 3 5 7-1/2		HMCPE 7A HMCPE 15A HMCPE 30A HMCPE 50A	EC22411BAC EC22411BAD EC22411BAE EC22411BAF	EC22412BAC EC22412BAD EC22412BAE EC22412BAF	EC22414BAC EC22414BAD EC22414BAE EC22414BAF	EC22418BAC EC22418BAD EC22418BAE EC22418BAF	
	460	1 3 5 10		HMCPE 3A HMCPE 7A HMCPE 15A HMCPE 30A	EC22411CAB EC22411CAC EC22411CAD EC22411CAE	EC22412CAB EC22412CAC EC22412CAD EC22412CAE	EC22414CAB EC22414CAC EC22414CAD EC22414CAE	EC22418CAB EC22418CAC EC22418CAD EC22418CAE	
	575	1 3 5 10		HMCP 3A HMCP 7A HMCP 15A HMCP 30A	EC22411DAB EC22411DAC EC22411DAD EC22411DAE	EC22412DAB EC22412DAC EC22412DAD EC22412DAE	EC22414DAB EC22414DAC EC22414DAD EC22414DAE	EC22418DAB EC22418DAC EC22418DAD EC22418DAE	

Starters do not include heater packs. Order quantity of 3 heater packs. For Heater Pack Selection, see **Page 16-19**.

① For other magnet coil voltages substitute the eighth digit with appropriate digit based on **Table 3-17**.
② For Ambient Compensated Overload Relay with Auto-Reset, add suffix **D**.
③ All Type 12 enclosures are standardized with external reset. For internal reset, order Mod Code **R5**.
④ Type 12 enclosure is without safety door interlock. When safety door interlock is required, add modification **E11**.
⑤ The Catalog Numbers listed in the Type 4X column are for Type 4X 304-Grade Stainless Steel, as indicated by the seventh digit **4**. Example: EC22404EAC. To order Type 4X 316-Grade Stainless Steel, change that digit to **9**. To order Type 4 Painted Steel, change that digit to **3**. To order Nonmetallic, change that digit to **5**. For details on these Alternate Enclosures, see **Tab 14**.

Cover Control ..... **Page 3-21**
Dimensions ..... **Page 15-2**
Accessories ..... **Page 16-18**
Modifications ..... **Page 16-40**
Renewal Parts ..... **Page 17-8**
Technical Data **CA08102001E**

Table 3-45. Class EC224 — Combination Non-reversing Starter — Circuit Breaker with CPT (Continued) ②

NEMA Size	Motor Voltage	Max. hp Rating Dual Element Fuses	Magnet Coil Voltage ①	Circuit Breaker Type	Type 1 General Purpose	Type 3R Rainproof	Type 4X ⑥ Watertight & Dust-Tight Stainless Steel	Type 12 Dust-Tight Industrial External Reset ③④	Component Starter (Open)
					Catalog Number	Catalog Number	Catalog Number	Catalog Number	Catalog Number
2	200	10	120	HMCPE 50A	EC22421EAF	EC22422EAF	EC22424EAF	EC22428EAF	A200M2CAC
	230	10 15		HMCPE 50A HMCPE 70A	EC22421BAF EC22421BAW	EC22422BAF EC22422BAW	EC22424BAF EC22424BAW	EC22428BAF EC22428BAW	
	460	25		HMCPE 50A	EC22421CAF	EC22422CAF	EC22424CAF	EC22428CAF	
	575	15 25		HMCPE 30A HMCPE 50A	EC22421CAE EC22421DAF	EC22422CAE EC22422DAF	EC22424CAE EC22424DAF	EC22428CAE EC22428DAF	
3	200	20 25	120	HMCPE 100A HMCPE 100A	EC22431EAG EC22431EAX	EC22432EAG EC22432EAX	EC22434EAG EC22434EAX	EC22438EAG EC22438EAX	A200M3CAC
	230	25 30		HMCPE 100A HMCPE 100A	EC22431BAG EC22431BAX	EC22432BAG EC22432BAX	EC22434BAG EC22434BAX	EC22438BAG EC22438BAX	
	460	50		HMCPE 100A	EC22431CAG	EC22432CAG	EC22434CAG	EC22438CAG	
	575	30 50		HMCP 50A HMCP 100A	EC22431DAF EC22431DAG	EC22432DAF EC22432DAG	EC22434DAF EC22434DAG	EC22438DAF EC22438DAG	
4	200 230 460 575	40 50 100 100	120	HMCP 150A HMCP 150A HMCP 150A HMCP 150A	EC22441EAH EC22441BAH EC22441CAH EC22441DAH	EC22442EAH EC22442BAH EC22442CAH EC22442DAH	EC22444EAH EC22444BAH EC22444CAH EC22444DAH	EC22448EAH EC22448BAH EC22448CAH EC22448DAH	A200M4CAC
5	200	50 75	120	HMCP 250A HMCP 400A	EC22451EAJ EC22451EAK	EC22452EAJ EC22452EAK	EC22454EAJ EC22454EAK	EC22458EAJ EC22458EAK	A200M5CAC
	230	60 100		HMCP 250A HMCP 400A	EC22451BAJ EC22451BAK	EC22452BAJ EC22452BAK	EC22454BAJ EC22454BAK	EC22458BAJ EC22458BAK	
	460	125 200		HMCP 250A HMCP 400A	EC22451CAJ EC22451CAK	EC22452CAJ EC22452CAK	EC22454CAJ EC22454CAK	EC22458CAJ EC22458CAK	
	575	150 200		HMCP 250A HMCP 400A	EC22451DAJ EC22451DAK	EC22452DAJ EC22452DAK	EC22454DAJ EC22454DAK	EC22458DAJ EC22458DAK	
6	200	150	120	HMCP 600A	EC22461EAL	EC22462EAL	EC22463EAL ⑥	EC22468EAL	A200M6CAC
	230	200		HMCP 600A	EC22461BAL	EC22462BAL	EC22463BAL ⑥	EC22468BAL	
	460	350 400		HMCP 600A HMCP 1200A	EC22461CAL EC22461CAP	EC22462CAL EC22462CAP	EC22463CAL ⑥ EC22463CAP ⑥	EC22468CAL EC22468CAP	
	575	400		HMCP 600A	EC22461DAL	EC22462DAL	EC22463DAL ⑥	EC22468DAL	

Starters do not include heater packs. Order quantity of 3 heater packs. For Heater Pack Selection, see **Page 16-19**.

① For other magnet coil voltages substitute the eighth digit with appropriate digit based on **Table 3-17**.
② For Ambient Compensated Overload Relay with Auto-Reset, add suffix **D**.
③ All Type 12 enclosures are standardized with external reset. For internal reset, order Mod Code **R5**.
④ Type 12 enclosure is without safety door interlock. When safety door interlock is required, add modification **E11**.
⑤ Type 4 (Painted steel) Size 6.
⑥ The Catalog Numbers listed in the Type 4X column are for Type 4X 304-Grade Stainless Steel, as indicated by the seventh digit **4**. Example: EC22404EAC. To order Type 4X 316-Grade Stainless Steel, change that digit to **9**. To order Type 4 Painted Steel, change that digit to **3**. To order Nonmetallic, change that digit to **5**. For details on these Alternate Enclosures, see **Tab 14**.

Cover Control ..... **Page 3-21**
Dimensions ..... **Page 15-2**
Accessories ..... **Page 16-18**
Modifications ..... **Page 16-40**
Renewal Parts ..... **Page 17-8**
Technical Data **CA08102001E**

Catalog Number ECH2211FAD

Product Description

Setting the Standard in Motor Control

Eaton's Cutler-Hammer® Advantage Motor Starters have extended operating life in a physical space requirement one half the size of conventional motor starters.

Offering motor overcurrent protection accurate to 2% at maximum FLC, Advantage also maintains constant coil power regardless of varying control circuit conditions, eliminating coil burnout, contact chatter and welding due to low voltage of fluttering control signals.

Advantage is designed with a full complement of features that make it the most versatile motor starter in the industry. Multifunction overload protection options provide application flexibility while reducing inventory. Communication capability extends benefits, allowing Advantage to be interactively linked to higher order control systems for monitoring, troubleshooting and control.

Technological advances incorporated in the Advantage design, such as pre-start diagnostics, increased accuracy and the ability to communicate with other systems, are benefits not realized in traditional motor starters.

Features, Functions, Benefits

Advantage Breakthroughs

To achieve the level of benefits envisioned for Advantage controls at a competitive price, it was discovered early in the development process that simply improving existing design concepts would fall short of the mark. A new approach involving a higher level of technology was required. The result was the incorporation of three technical breakthroughs — new current sensing monitoring, an energy-balanced contact closure system that increased life by decreasing electrical and mechanical wear and an intelligent coil controller optimizing the contact closing process based on varying control circuit conditions. Coordinating these breakthroughs to provide enhanced motor control performance is concentrated in the SURE chip.

Advantage uses the right combination of brains and brawn in effecting a motor start. The power circuit of the contactor employs heavy-duty silver alloy contacts scientifically designed for long life. The addition of a uniquely developed application-specific microprocessor chip, regulates power supplied to the operating coil. The regulated closing profile is tailored to existing control circuit conditions. This results in an energy balanced system which reduces armature/magnet crash and contact bounce, extending mechanical and electrical life.

Improved Protection and Motor Utilization

The motor circuit monitoring and overload protection functions of Advantage starters are provided by three current sensors closely monitored by the microprocessor. This sensor/microprocessor combination yields a protection scheme closely paralleling that of the motor heating damage boundary expressed in terms of current and time. Accurate to 2%, Advantage allows full utilization of motor capability without motor damage or nuisance tripping.

No Heaters, Small Size

Advantage starters eliminate the need for costly heater elements and their associated installation expense. Standard overload protection functions include phase loss and unbalance protection, selectable trip class, automatic/manual reset and ground current protection.

Built-In Communications Capabilities Provide Two-Way Control

Advantage also offers low cost communication capability. ON-OFF commands, status and motor data can be linked to automated control systems without the addition of costly sensors, I/O modules and transducers, in a language compatible with many computer-based software systems in use today.

Protected by 22 patents and proven in many years of operating experience in harsh industrial applications, Advantage motor starters and contactors offer the user unprecedented value at a price competitive with traditional devices.

Standards and Certifications

Note: See **Page 18-2** for additional information on Standards and Certifications that apply to all Cutler-Hammer Enclosed Control products.

- UL Listed
- cUL Listed (indicates appropriate CSA Standard investigation)
- ABS Type Approved

Catalog Number Selection

Table 3-46. Advantage Line Enclosed Control Catalog Numbering System

E C A 2 2 2 1 A A F - __

Design

A = Advantage NEMA

Class	Table
01 = Contactors	①
02 = Reversing Contactors	①
05 = Non-combination Non-reversing Starter	**3-50**
06 = Non-combination Reversing Starter	①
07 = Non-combination Non-reversing Starter, with CPT	①
16 = Combination Non-reversing Starter — Fusible Disconnect	**3-51**
17 = Combination Reversing Starter with Disconnect Switch	①
18 = Combination Reversing Starter — Fusible/ Non-fusible Disconnect with CPT	**3-52**
22 = Combination Non-reversing Starter — Circuit Breaker	**3-53**
23 = Reversing, Combination with HMCP/E	①
24 = Combination with HMCP/E with CPT	①
33 = Multispeed 2S2W Non-combination	①
34 = Multispeed 2S1W CT or VT Non-combination	①
35 = Multispeed 2S1W CH Non-combination	①
36 = Multispeed with Disconnect Switch, 2S2W	①
37 = Multispeed with Disconnect Switch, 2S1W CT or VT	①
38 = Multispeed with Disconnect Switch, 2S1W CH	①
39 = Multispeed with HMCP/E, 2S2W	①
40 = Multispeed with HMCP/E, 2S1W CT or VT	①
41 = Multispeed with HMCP/E, 2S1W CH	①
42 = Autotransformer, Non-combination	①
43 = Autotransformer, with Disconnect Switch	①
44 = Autotransformer, with HMCP/E	①
45 = Part-Winding, Non-combination	①
46 = Part-Winding, with Disconnect Switch	①
47 = Part-Winding, with HMCP/E	①
48 = Y-D, Open Transition, Non-combination	①
49 = Y-D, Open Transition, with Disconnect Switch	①
50 = Y-D, Open Transition, with HMCP/E	①
51 = Y-D, Closed Transition, Non-combination	①
52 = Y-D, Closed Transition, with Disconnect Switch	①
53 = Y-D, Closed Transition, with HMCP/E	①
54 = Std Width Pump Panel, with Disconnect Switch	①
55 = Std Width Pump Panel, with HMCP/E	①
62 = Autotransformer Pump Panel, Disconnect Switch	①
63 = Autotransformer Pump Panel, HMCP/E	①
64 = Part-Winding Pump Panel, Disconnect	①
65 = Part-Winding Pump Panel, Circuit Breaker	①
68 = Duplex, Non-combination	①
69 = Duplex, with Disconnect Switch	①
70 = Duplex, with HMCP/E	①

Modification Codes

See **Page 16-40**

Cover Control — Starters

10250T and E22 style, see **Tables 3-19 – 3-21**
Flange-Mounted ACM, see **Table 3-49**

Contactors

3 = 3 Poles

Coil Voltage and/or Control Transformers

See **Tables 3-47** and **3-48**

Disconnect Fuse Clip Ratings

A = None	**G** = 100A/600V R	**N** = 600A/600V R
B = 30A/250V R	**H** = 200A/250V R	**P** = 800A/600V R
C = 30A/600V R	**J** = 200A/600V R	**Q** = 1200A/600V R
D = 60A/250V R	**K** = 400A/250V R	**R** = 1600A/600V R
E = 60A/600V R	**L** = 400A/600V R	**S** = 2000A/600V R
F = 100A/250V R	**M** = 600A/250V R	**T** = by Description

HMCP/E or Breaker Ratings

A = None	**H** = 150A	**R** = 3000A
B = 3A	**J** = 250A	**T** = by Description
C = 7A	**K** = 400A	**5** = 3A ②
D = 15A	**L** = 600A	**6** = 7A ②
E = 30A	**M** = 800A	**7** = 15A ②
F = 50A	**N** = 1000A	**8** = 30A ②
W = 70A	**P** = 1200A	**9** = 50A ②
G = 100A	**Q** = 2000A	**I** = 100A ②

Enclosure Type

1 = Type 1 — General Purpose
2 = Type 3R — Rainproof
3 = Type 4 — Watertight (Painted Steel)
4 = Type 4X — Watertight (304-Grade Stainless Steel)
5 = Type 4X — Corrosion (Nonmetallic)
6 = Type 7/9 — Bolted Hazardous Location
7 = Type 7/9 — Threaded Hazardous Location
8 = Type 12 — Dust-Tight
9 = Type 4X — 316-Grade Stainless Steel

NEMA Size

L = Lower 1	**4** = Size 4
1 = Size 1	**5** = Size 5
2 = Size 2	**6** = Size 6
3 = Size 3	

① Contact Eaton for more information.
② Use with Sizes L – 3, HMCP 600V applications only.

Table 3-47. Magnet Coil Codes (System Voltage) ③

Code	Magnet Coil	Code	Magnet Coil
F	120/60	**Z**	By Description
N	110/50		

③ When control power transformer modification codes (**C1 – C11**) are used or when starter class includes CPT (i.e. ECN07, 18), see **Table 3-48** for system voltage code.

Table 3-48. Control Power Transformer Codes (System Voltage)

Code	Primary	Secondary	Code	Primary	Secondary
B	240/480 – 220/440 Wired for 240V	120/60 – 110/50	**H**	277/60	120/60
			L	380/50	110/50
C	240/480 – 220/440 Wired for 480V	120/60 – 110/50	**M**	415/50	110/50
			X	240/480/600 Wired for 480V	120
D	600/60 – 550/50	120/60 – 110/50			
E	208/60	120/60	**Z**	By Description	

Cover Control

Flange Mounted Pilot ACM Devices — NEMA 1, 12 Only

For **Factory Installed** flange mounted pilot devices using **Advantage Control Modules** (ACMs), change the 9th character from **A** to **Y** and add one of the following (**A49** through **A62**) Mod Code Suffixes to the Catalog Number. In addition, one **A63** Mod may be added if desired.

Table 3-49. Flange Mounted Pilot ACM Devices —

Flange Mounted Pilot Devices Description	Factory Installed	Field Installation Kits
	Mod Code Suffix	Catalog Number
Full Voltage		
Status Only with Reset	**A49**	**WPBFV1**
START/STOP	**A50**	**WPBFV2**
START/STOP/HOA	**A51**	**WPBFV3**
ON/OFF/AUTO	**A52**	**WPBFV4**
Reversing		
Status Only with Reset	**A53**	**WPBR1**
FWD/REV/STOP	**A54**	**WPBR2**
FWD/REV/STOP/HOA	**A55**	**WPBR3**
2-Speed		
Status Only with Reset	**A56**	**WPB2S1**
FAST/SLOW/STOP	**A57**	**WPB2S2**
FAST/SLOW/STOP/HOA	**A58**	**WPB2S3**
Reduced Voltage		
Status Only with Reset	**A59**	**WPBRV1**
START/STOP	**A60**	**WPBRV2**
START/STOP/HOA	**A61**	**WPBRV3**
ON/OFF/AUTO	**A62**	**WPBRV4**
Metering Module	**A63**	**WMETER** ①
10 ft. Interconnect Cable	—	**WACM10**
6 ft. Interconnect Cable	—	**WACM6**
3 ft. Interconnect Cable	—	**WACM3**
1 ft. Interconnect Jumper	—	**WACM1**

① This device is not compatible with Advantage Starters on DeviceNet via the WPONIDNA.

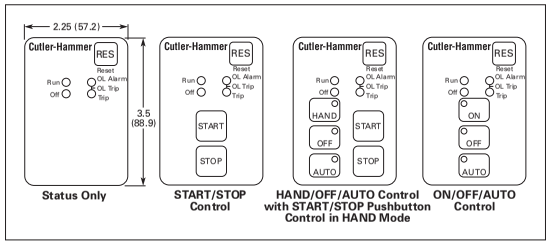

Figure 3-11. Flange Mounted Pilot ACM Devices

Other Cover Control Devices

See **Page 3-21** in NEMA Contactors & Starters, Freedom Line.

Features and Product Selection

- Full Voltage
- Solid-State Overload Relays
- 600V Maximum

Table 3-50. Class ECA05 — Non-combination Non-reversing Starter

NEMA Size	Motor Voltage ①	Maximum hp Rating ①	Magnet Coil Voltage ③④	Type 3R Rainproof	Type 4X Watertight & Dust-Tight Stainless Steel ⑤	Type 12 Dust-Tight Industrial ⑥	Component Starter (Open)
				Catalog Number	Catalog Number	Catalog Number	Catalog Number
1-L ②	200 230 460 575	1 1 2 2	120	**ECA05L2FAA**	**ECA05L4FAA**	**ECA05L8FAA**	**W200MLCFC**
1	200 230 460 575	7-1/2 7-1/2 10 10	120	**ECA0512FAA**	**ECA0514FAA**	**ECA0518FAA**	**W200M1CFC**
2	200 230 460 575	10 15 25 25	120	**ECA0522FAA**	**ECA0524FAA**	**ECA0528FAA**	**W200M2CFC**
3	200 230 460 575	25 30 50 50	120	**ECA0532FAA**	**ECA0534FAA**	**ECA0538FAA**	**W200M3CFC**
4	200 230 460 575	40 50 100 100	120	**ECA0542FAA**	**ECA0544FAA**	**ECA0548FAA**	**W200M4CFC**
5	200 230 460 575	75 100 200 200	120	**ECA0552FAA**	**ECA0554FAA**	**ECA0558FAA**	**W200M5CFC**
6	200 230 460 575	150 200 400 400	120 ⑦	**ECA0562EAA** **ECA0562BAA** **ECA0562CAA** **ECA0562DAA**	**ECA0564EAA** **ECA0564BAA** **ECA0564CAA** **ECA0564DAA**	**ECA0568EAA** **ECA0568BAA** **ECA0568CAA** **ECA0568DAA**	**W200M6CFC**

① Maximum horsepower rating of starters for 380V 50 Hz applications:

NEMA Size	1-L ②	1	2	3	4	5	6
Horsepower	1-1/2	10	25	50	75	150	300

② For motor full load current (FLA) range of .47A – 3.81A with a 1.15 to 1.25 service factor and for motor hp range of 1/4 hp to 2 hp at 460V.

③ All starters provided with coils for separate control.

④ Starters for 50 Hz operation use 110V 50 Hz magnet coil. Change 8th character from **F** to **N**.

⑤ The Catalog Numbers listed in the Type 4X column are for Type 4X 304-Grade Stainless Steel, as indicated by the seventh digit **4**. Example: ECA05L4FAA. To order Type 4X 316-Grade Stainless Steel, change that digit to **9**. To order Type 4 Painted Steel, change that digit to **3**. To order Nonmetallic, change that digit to **5**. For details on these Alternate Enclosures, see **Tab 14**.

⑥ Choose a Type 12 enclosure for Type 1 applications.

⑦ Size 6 includes control power transformer.

Cover Mounted Control – 10250T Series ..... **Page 3-21**
Cover Mounted Control – ACM Series ..... **Page 3-61**
Accessories ..... **Page 16-12**
Modifications ..... **Page 16-40**
Technical Data ..... **Page 18-13**

Features and Product Selection

- Full Voltage
- Solid-State Overload Relays
- 600V Maximum
- 100,000 AIC Short Circuit — 600V Maximum

Table 3-51. Class ECA16 — Combination Non-reversing Starter — Fusible Disconnect

NEMA Size	Motor Voltage	Maximum hp Rating Dual Element Fuses	Magnet Coil Voltage ②③	Fuse Clip Amps. ⑦	Type 1 General Purpose	Type 3R Rainproof	Type 4X Watertight & Dust-Tight Stainless Steel ⑥	Type 12 Dust-Tight Industrial ④⑤	Component Starter (Open)
					Catalog Number	Catalog Number	Catalog Number	Catalog Number	Catalog Number
1-L ①	200 230	1	120	30A	**ECA16L1FAB**	**ECA16L2FAB**	**ECA16L4FAB**	**ECA16L8FAB**	**W200MLCFC**
	460 575	2	120	30A	**ECA16L1FAC**	**ECA16L2FAC**	**ECA16L4FAC**	**ECA16L8FAC**	**W200MLCFC**
1	200 230	7-1/2	120	30A	**ECA1611FAB**	**ECA1612FAB**	**ECA1614FAB**	**ECA1618FAB**	**W200M1CFC**
	460 575	10	120	30A	**ECA1611FAC**	**ECA1612FAC**	**ECA1614FAC**	**ECA1618FAC**	**W200M1CFC**
2	200 230	10 15	120	60A	**ECA1621FAD**	**ECA1622FAD**	**ECA1624FAD**	**ECA1628FAD**	**W200M2CFC**
	460 575	25	120	60A	**ECA1621FAE**	**ECA1622FAE**	**ECA1624FAE**	**ECA1628FAE**	**W200M2CFC**
3	200 230	25 30	120	100A	**ECA1631FAF**	**ECA1632FAF**	**ECA1634FAF**	**ECA1638FAF**	**W200M3CFC**
	460 575	50	120	100A	**ECA1631FAG**	**ECA1632FAG**	**ECA1634FAG**	**ECA1638FAG**	**W200M3CFC**
4	200 230	40 50	120	200A	**ECA1641FAH**	**ECA1642FAH**	**ECA1644FAH**	**ECA1648FAH**	**W200M4CFC**
	460 575	100	120	200A	**ECA1641FAJ**	**ECA1642FAJ**	**ECA1644FAJ**	**ECA1648FAJ**	**W200M4CFC**
5	200 230	75 100	120	400A	**ECA1651FAK**	**ECA1652FAK**	**ECA1654FAK**	**ECA1658FAK**	**W200M5CFC**
	460 575	200	120	400A	**ECA1651FAL**	**ECA1652FAL**	**ECA1654FAL**	**ECA1658FAL**	**W200M5CFC**
6	200 230	150 200	120 ⑧	600A	**ECA1661EAM** **ECA1661BAM**	**ECA1662EAM** **ECA1662BAM**	**ECA1663EAM** **ECA1663BAM**	**ECA1668EAM** **ECA1668BAM**	**W200M6CFC**
	460 575	400		600A	**ECA1661CAN** **ECA1661DAN**	**ECA1662CAN** **ECA1662DAN**	**ECA1663CAN** **ECA1663DAN**	**ECA1668CAN** **ECA1668DAN**	**W200M6CFC**

① For motor full load current (FLA) range of .47A – 3.81A with a 1.15 to 1.25 service factor and for motor hp range of 1/4 hp to 2 hp at 460V.
② All starters provided with coils for separate control.
③ Starters for 50 Hz operation use 110V 50 Hz magnet coil. Change 8th character from **F** to **N**.
④ All Type 12 enclosures are standardized with external reset. For internal reset, order Mod Code **R5**.
⑤ Type 12 enclosure is without safety door interlock. When safety door interlock is required, change seventh character from **8** to **9**, i.e. ECA16**1**8FAC would become ECA16**1**9FAC.
⑥ The Catalog Numbers listed in the Type 4X column are for Type 4X 304-Grade Stainless Steel, as indicated by the seventh digit **4**. Example: ECA16L**4**FAB. To order Type 4X 316-Grade Stainless Steel, change that digit to **9**. To order Type 4 Painted Steel, change that digit to **3**. To order Nonmetallic, change that digit to **5**. For details on these Alternate Enclosures, see **Tab 14**.
⑦ Fuse clips are for Class R fuses only. For H and J fuses see mods, **Page 16-42**.
⑧ Size 6 includes control power transformer.

ECA1611FAA

Cover Mounted Control – 10250T Series ..... **Page 3-21**
Cover Mounted Control – ACM Series ..... **Page 3-61**
Accessories ..... **Page 16-12**
Modifications ..... **Page 16-40**
Technical Data ..... **Page 18-13**

Table 3-52. Class ECA18 — Combination Reversing Starter — Fusible/Non-fusible Disconnect with CPT

NEMA Size	Primary Voltage ②	Max. hp Rating Dual Element Fuses	Secondary Voltage Magnet Coil Voltage	Fuse Clip Amps. ⑥	Type 1 General Purpose	Type 3R Rainproof	Type 4X Watertight & Dust-Tight Stainless Steel ⑤	Type 12 Dust-Tight Industrial ③④	Component Starter (Open)
					Catalog Number	Catalog Number	Catalog Number	Catalog Number	Catalog Number
Fusible ⑦									
1-L ①	208 240	1	120	30A	**ECA18L1EAB** **ECA18L1BAB**	**ECA18L2EAB** **ECA18L2BAB**	**ECA18L4EAB** **ECA18L4BAB**	**ECA18L8EAB** **ECA18L8BAB**	**W200MLCFC**
	480 600	2	120	30A	**ECA18L1CAC** **ECA18L1DAC**	**ECA18L2CAC** **ECA18L2DAC**	**ECA18L4CAC** **ECA18L4DAC**	**ECA18L8CAC** **ECA18L8DAC**	**W200MLCFC**
1	208 240	7-1/2	120	30A	**ECA1811EAB** **ECA1811BAB**	**ECA1812EAB** **ECA1812BAB**	**ECA1814EAB** **ECA1814BAB**	**ECA1818EAB** **ECA1818BAB**	**W200M1CFC**
	480 600	10	120	30A	**ECA1811CAC** **ECA1811DAC**	**ECA1812CAC** **ECA1812DAC**	**ECA1814CAC** **ECA1814DAC**	**ECA1818CAC** **ECA1818DAC**	**W200M1CFC**
2	208 240	10 15	120	60A	**ECA1821EAD** **ECA1821BAD**	**ECA1822EAD** **ECA1822BAD**	**ECA1824EAD** **ECA1824BAD**	**ECA1828EAD** **ECA1828BAD**	**W200M2CFC**
	480 600	25	120	60A	**ECA1821CAE** **ECA1821DAE**	**ECA1822CAE** **ECA1822DAE**	**ECA1824CAE** **ECA1824DAE**	**ECA1828CAE** **ECA1828DAE**	**W200M2CFC**
3	208 240	25 30	120	100A	**ECA1831EAF** **ECA1831BAF**	**ECA1832EAF** **ECA1832BAF**	**ECA1834EAF** **ECA1834BAF**	**ECA1838EAF** **ECA1838BAF**	**W200M3CFC**
	480 600	50	120	100A	**ECA1831CAG** **ECA1831DAG**	**ECA1832CAG** **ECA1832DAG**	**ECA1834CAG** **ECA1834DAG**	**ECA1838CAG** **ECA1838DAG**	**W200M3CFC**
4	208 240	40 50	120	200A	**ECA1841EAH** **ECA1841BAH**	**ECA1842EAH** **ECA1842BAH**	**ECA1844EAH** **ECA1844BAH**	**ECA1848EAH** **ECA1848BAH**	**W200M4CFC**
	480 600	100	120	200A	**ECA1841CAJ** **ECA1841DAJ**	**ECA1842CAJ** **ECA1842DAJ**	**ECA1844CAJ** **ECA1844DAJ**	**ECA1848CAJ** **ECA1848DAJ**	**W200M4CFC**
Non-fusible									
1-L ①	208 240 480 600	1 1 2 2	120	30A	**ECA18L1EAA** **ECA18L1BAA** **ECA18L1CAA** **ECA18L1DAA**	**ECA18L2EAA** **ECA18L2BAA** **ECA18L2CAA** **ECA18L2DAA**	**ECA18L4EAA** **ECA18L4BAA** **ECA18L4CAA** **ECA18L4DAA**	**ECA18L8EAA** **ECA18L8BAA** **ECA18L8CAA** **ECA18L8DAA**	**W200MLCFC**
1	208 240 480 600	7-1/2 7-1/2 10 10	120	30A	**ECA1811EAA** **ECA1811BAA** **ECA1811CAA** **ECA1811DAA**	**ECA1812EAA** **ECA1812BAA** **ECA1812CAA** **ECA1812DAA**	**ECA1814EAA** **ECA1814BAA** **ECA1814CAA** **ECA1814DAA**	**ECA1818EAA** **ECA1818BAA** **ECA1818CAA** **ECA1818DAA**	**W200M1CFC**
2	208 240 480 600	10 15 25 25	120	60A	**ECA1821EAA** **ECA1821BAA** **ECA1821CAA** **ECA1821DAA**	**ECA1822EAA** **ECA1822BAA** **ECA1822CAA** **ECA1822DAA**	**ECA1824EAA** **ECA1824BAA** **ECA1824CAA** **ECA1824DAA**	**ECA1828EAA** **ECA1828BAA** **ECA1828CAA** **ECA1828DAA**	**W200M2CFC**
3	208 240 480 600	25 30 50 50	120	100A	**ECA1831EAA** **ECA1831BAA** **ECA1831CAA** **ECA1831DAA**	**ECA1832EAA** **ECA1832BAA** **ECA1832CAA** **ECA1832DAA**	**ECA1834EAA** **ECA1834BAA** **ECA1834CAA** **ECA1834DAA**	**ECA1838EAA** **ECA1838BAA** **ECA1838CAA** **ECA1838DAA**	**W200M3CFC**
4	208 240 480 600	40 50 100 100	120	200A	**ECA1841EAA** **ECA1841BAA** **ECA1841CAA** **ECA1841DAA**	**ECA1842EAA** **ECA1842BAA** **ECA1842CAA** **ECA1842DAA**	**ECA1844EAA** **ECA1844BAA** **ECA1844CAA** **ECA1844DAA**	**ECA1848EAA** **ECA1848BAA** **ECA1848CAA** **ECA1848DAA**	**W200M4CFC**

① For motor full load current (FLA) range of .47A – 3.81A with a 1.15 to 1.25 service factor and for motor hp range of 1/4 hp to 2 hp at 460V.
② Other control power transformer primary and/or secondary voltages, see **Page 3-60**.
③ All Type 12 enclosures are standardized with external reset. For internal reset, order Mod Code **R5**.
④ Type 12 enclosure is without safety door interlock. When safety door interlock is required, change seventh character from **8** to **9**, i.e. ECA1818EAA would become ECA1819EAA.
⑤ The Catalog Numbers listed in the Type 4X column are for Type 4X 304-Grade Stainless Steel, as indicated by the seventh digit **4**. Example: ECA16L**4**EAB. To order Type 4X 316-Grade Stainless Steel, change that digit to **9**. To order Type 4 Painted Steel, change that digit to **3**. To order Nonmetallic, change that digit to **5**. For details on these Alternate Enclosures, see **Tab 14**.
⑥ Fuse clips are for Class R fuses only. For H and J Fuses see mods, **Page 16-42**.
⑦ 100,000 AIC short circuit.

Cover Mounted Control – 10250T Series ..... **Page 3-21**
Cover Mounted Control – ACM Series ..... **Page 3-61**
Accessories ..... **Page 16-12**
Modifications ..... **Page 16-40**
Technical Data ..... **Page 18-13**

Features and Product Selection

- Full Voltage
- Solid-State Overload Relays
- 600V Maximum

Table 3-53. Class ECA22 — Combination Non-reversing Starter — Circuit Breaker

NEMA Size	Motor Voltage	Max. hp Rating	Magnet Coil Voltage ②③	Circuit Breaker Type	Type 1 General Purpose Catalog Number	Type 3R Rainproof Catalog Number	Type 4X Watertight & Dust-Tight Stainless Steel ④ Catalog Number	Type 12 Dust-Tight Industrial ⑤ Catalog Number	Component Starter (Open) Catalog Number
1-L ①	200	1	120	HMCPE 7A	ECA22L1FAC	ECA22L2FAC	ECA22L4FAC	ECA22L8FAC	W200MLCFC
	230	1		HMCPE 7A	ECA22L1FAC	ECA22L2FAC	ECA22L4FAC	ECA22L8FAC	
	460	1		HMCPE 3A	ECA22L1FAB	ECA22L2FAB	ECA22L4FAB	ECA22L8FAB	
		3		HMCPE 7A	ECA22L1FAC	ECA22L2FAC	ECA22L4FAC	ECA22L8FAC	
	575	1		HMCP 3A	ECA22L1FA5	ECA22L2FA5	ECA22L4FA5	ECA22L8FA5	
		3		HMCP 7A	ECA22L1FA6	ECA22L2FA6	ECA22L4FA6	ECA22L8FA6	
1	200	1	120	HMCPE 7A	ECA2211FAC	ECA2212FAC	ECA2214FAC	ECA2218FAC	W200M1CFC
		3		HMCPE 15A	ECA2211FAD	ECA2212FAD	ECA2214FAD	ECA2218FAD	
		5		HMCPE 30A	ECA2211FAE	ECA2212FAE	ECA2214FAE	ECA2218FAE	
		7-1/2		HMCPE 50A	ECA2211FAF	ECA2212FAF	ECA2214FAF	ECA2218FAF	
	230	1	120	HMCPE 7A	ECA2211FAC	ECA2212FAC	ECA2214FAC	ECA2218FAC	W200M1CFC
		3		HMCPE 15A	ECA2211FAD	ECA2212FAD	ECA2214FAD	ECA2218FAD	
		5		HMCPE 30A	ECA2211FAE	ECA2212FAE	ECA2214FAE	ECA2218FAE	
		7-1/2		HMCPE 50A	ECA2211FAF	ECA2212FAF	ECA2214FAF	ECA2218FAF	
	460	1	120	HMCPE 3A	ECA2211FAB	ECA2212FAB	ECA2214FAB	ECA2218FAB	W200M1CFC
		3		HMCPE 7A	ECA2211FAC	ECA2212FAC	ECA2214FAC	ECA2218FAC	
		5		HMCPE 15A	ECA2211FAD	ECA2212FAD	ECA2214FAD	ECA2218FAD	
		10		HMCPE 30A	ECA2211FAE	ECA2212FAE	ECA2214FAE	ECA2218FAE	
	575	1	120	HMCP 3A	ECA2211FA5	ECA2212FA5	ECA2214FA5	ECA2218FA5	W200M1CFC
		3		HMCP 7A	ECA2211FA6	ECA2212FA6	ECA2214FA6	ECA2218FA6	
		5		HMCP 15A	ECA2211FA7	ECA2212FA7	ECA2214FA7	ECA2218FA7	
		10		HMCP 30A	ECA2211FA8	ECA2212FA8	ECA2214FA8	ECA2218FA8	
2	200	10	120	HMCPE 50A	ECA2221FAF	ECA2222FAF	ECA2224FAF	ECA2228FAF	W200M2CFC
	230	10		HMCPE 50A	ECA2221FAF	ECA2222FAF	ECA2224FAF	ECA2228FAF	
		15		HMCPE 70A	ECA2221FAW	ECA2222FAW	ECA2224FAW	ECA2228FAW	
	460	25		HMCPE 50A	ECA2221FAF	ECA2222FAF	ECA2224FAF	ECA2228FAF	
	575	15		HMCP 30A	ECA2221FA8	ECA2222FA8	ECA2224FA8	ECA2228FA8	
		25		HMCP 50A	ECA2221FA9	ECA2222FA9	ECA2224FA9	ECA2228FA9	
3	200	20	120	HMCPE 100A	ECA2231FAG	ECA2232FAG	ECA2234FAG	ECA2238FAG	W200M3CFC
		25		HMCPE 100A	ECA2231FAX	ECA2232FAX	ECA2234FAX	ECA2238FAX	
	230	25		HMCPE 100A	ECA2231FAG	ECA2232FAG	ECA2234FAG	ECA2238FAG	
		30		HMCPE 100A	ECA2231FAX	ECA2232FAX	ECA2234FAX	ECA2238FAX	
	460	50		HMCPE 100A	ECA2231FAG	ECA2232FAG	ECA2234FAG	ECA2238FAG	
	575	30		HMCP 50A	ECA2231FA9	ECA2232FA9	ECA2234FA9	ECA2238FA9	
		50		HMCP 100A	ECA2231FAI	ECA2232FAI	ECA2234FAI	ECA2238FAI	
4	200	40	120	HMCP 150A	ECA2241FAH	ECA2242FAH	ECA2244FAH	ECA2248FAH	W200M4CFC
	230	50		HMCP 150A					
	460	100		HMCP 150A					
	575	100		HMCP 150A					
5	200	50	120	HMCP 250A	ECA2251FAJ	ECA2252FAJ	ECA2254FAJ	ECA2258FAJ	W200M5CFC
		75		HMCP 400A	ECA2251FAK	ECA2252FAK	ECA2254FAK	ECA2258FAK	
	230	60		HMCP 250A	ECA2251FAJ	ECA2252FAJ	ECA2254FAJ	ECA2258FAJ	
		100		HMCP 400A	ECA2251FAK	ECA2252FAK	ECA2254FAK	ECA2258FAK	
	460	125		HMCP 250A	ECA2251FAJ	ECA2252FAJ	ECA2254FAJ	ECA2258FAJ	
		200		HMCP 400A	ECA2251FAK	ECA2252FAK	ECA2254FAK	ECA2258FAK	
	575	150		HMCP 250A	ECA2251FAJ	ECA2252FAJ	ECA2254FAJ	ECA2258FAJ	
		200		HMCP 400A	ECA2251FAK	ECA2252FAK	ECA2254FAK	ECA2258FAK	
6	200	150	120 ⑥	HMCP 600A	ECA2261EAL	ECA2262EAL	ECA2264EAL	ECA2268EAL	W200M6CFC
	230	200		HMCP 600A	ECA2261BAL	ECA2262BAL	ECA2264BAL	ECA2268BAL	
	460	350		HMCP 600A	ECA2261CAL	ECA2262CAL	ECA2264CAL	ECA2268CAL	
		400		HMCP 1200A	ECA2261FAP	ECA2262FAP	ECA2264FAP	ECA2268FAP	
	575	400		HMCP 600A	ECA2261DAL	ECA2262DAL	ECA2264DAL	ECA2268DAL	

① For motor full load current (FLA) range of .47A – 3.81A with a 1.15 to 1.25 service factor and for motor hp range of 1/4 hp to 2 hp at 460V.
② All starters provided with coils for separate control.
③ Starters for 50 Hz operation use 110V 50 Hz magnet coil. Change 8th character from **F** to **N**.
④ The Catalog Numbers listed in the Type 4X column are for Type 4X 304-Grade Stainless Steel, as indicated by the seventh digit **4**. Example: ECA22L4FAC. To order Type 4X 316-Grade Stainless Steel, change that digit to **9**. To order Type 4 Painted Steel, change that digit to **3**. To order Nonmetallic, change that digit to **5**. For details on these Alternate Enclosures, see **Tab 14**.
⑤ All Type 12 enclosures are standardized with external reset. For internal reset, order Mod Code **R5**.
⑥ Size 6 includes control power transformer.

Cover Mounted Control – 10250T Series ..... **Page 3-21**
Cover Mounted Control – ACM Series ..... **Page 3-61**
Accessories ..... **Page 16-12**
Modifications ..... **Page 16-40**
Technical Data ..... **Page 18-13**

Wiring Diagrams

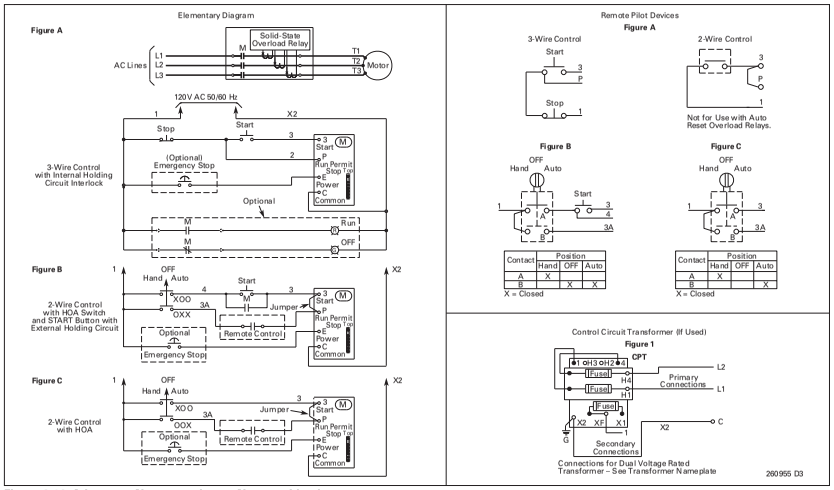

Figure 3-12. Advantage Non-reversing — Non-combination

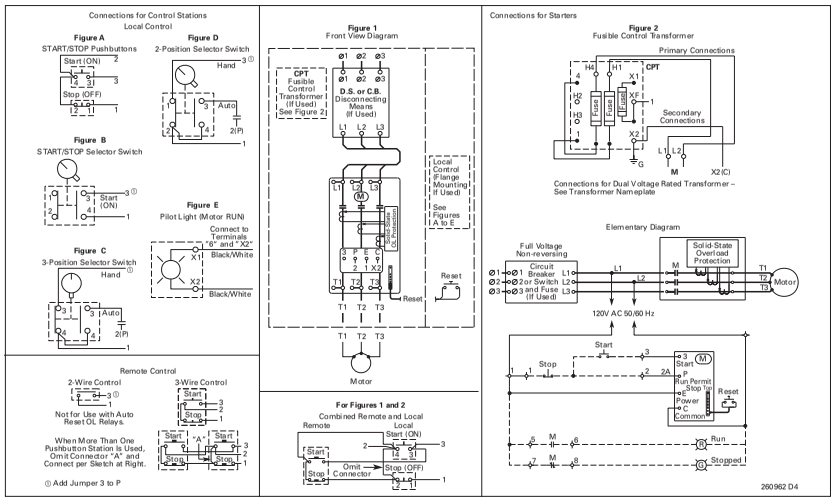

Figure 3-13. Advantage Non-reversing — Combination

Catalog Number Selection

Note: For Catalog Number Selection for Freedom Multispeed Starters, see **Page 3-20**.

Cover Control

Flange Control Kits

For on-the-job conversion of Type 1, 3R, 4X and 12 enclosed starters. Knockouts are provided on the Type 1 flange. Type 3R, 4X and 12 have prepunched holes with removable hole plugs.

Factory Installed

To order factory installed pilot devices, change the 9th character of the Catalog Number to the alpha shown in the table below. Example: to order an **ECN3414CAA** with FAST/OFF/SLOW selector switch and 2 red pilot lights, change the **A** to **J**, i.e. ECN3414CJA.

Table 3-54. Multispeed Pilot Devices

Description	Factory Installed Flange Control			Field Installation Kits	
	Position 9 Alpha	Type 1 Non-combination ①	All Others ②	Type 1 Non-combination ①	All Others ②
				Catalog Number	Catalog Number
No Cover Mounted Pilot Devices	A	■	■	C400GK0	—
FAST/SLOW/STOP Pushbuttons	B	■	■	C400GK9 ④	C400T7
with 2 Red Pilot Lights	C	■	■	C400GK94 ③	—
with 2 Red/1 Green Pilot Lights	D	—	■	—	—
HIGH/LOW/STOP Pushbuttons	E	—	■	—	C400T8
with 2 Red Pilot Lights	F	—	■	—	—
with 2 Red/1 Green Pilot Lights	G	—	■	—	—
FAST/OFF/SLOW Selector Switch	H	—	■	—	C400T17
with 2 Red Pilot Lights	J	—	■	—	—
with 2 Red/1 Green Pilot Lights	K	—	■	—	—
Two Red Pilot Lights	P	■	■	C400GK44 ③	⑤
One Green Pilot Light	Q	■	■	C400GK41 ③	C400T10 ③
Two Red/One Green Pilot Lights	R	■	■	—	—
HIGH/OFF/LOW Selector Switch	V	—	■	—	C400T18
with 2 Red Pilot Lights	W	—	■	—	—
with 2 Red/1 Green Pilot Lights	X	—	■	—	—

① Type 1, NEMA Sizes 00 – 2 Non-combination ONLY.
② Type 1, NEMA Sizes 3 – 7 Non-combination PLUS all Type 3R, 4X, 12 Non-combination PLUS all Combination.
③ Add Code Letter from table below to Catalog Number for voltage — Kits only. Example: C400GK94B.

Rating	Code Letter	Rating	Code Letter	Rating	Code Letter
120V 60 Hz	A	240V 60 Hz	B	480V 60 Hz	C
208V 60 Hz	E	380V 50 Hz	L	600V 60 Hz	D

④ Uses a FAST/SLOW/OFF pushbutton.
⑤ Order quantity 2 of **C400T9** ③.

Features

- 3-Phase Magnetic, 3-Pole
- Interchangeable Heater OLR
- 600V Maximum

Product Selection

Table 3-55. Class ECN33 — Non-combination 2-Speed 2-Winding Starter

NEMA Size	Motor Voltage ①	Maximum hp Rating		Magnet Coil Voltage	Type 1 General Purpose	Type 3R Rainproof	Type 4X ③ Watertight & Dust-Tight Stainless Steel	Type 12 Dust-Tight Industrial External Reset	Component Starter (Open)
		Constant or Variable Torque	Constant Horsepower		Catalog Number	Catalog Number	Catalog Number	Catalog Number	Catalog Number
0	—	—	—	120	ECN3301AAA	ECN3302AAA	ECN3304AAA	ECN3308AAA	AN700BN022A
	200	3	2	208	ECN3301EAA	ECN3302EAA	ECN3304EAA	ECN3308EAA	AN700BN022E
	230	3	2	240	ECN3301BAA	ECN3302BAA	ECN3304BAA	ECN3308BAA	AN700BN022B
	460	5	3	480	ECN3301CAA	ECN3302CAA	ECN3304CAA	ECN3308CAA	AN700BN022C
	575	5	3	600	ECN3301DAA	ECN3302DAA	ECN3304DAA	ECN3308DAA	AN700BN022D
1	—	—	—	120	ECN3311AAA	ECN3312AAA	ECN3314AAA	ECN3318AAA	AN700DN022A
	200	7-1/2	5	208	ECN3311EAA	ECN3312EAA	ECN3314EAA	ECN3318EAA	AN700DN022E
	230	7-1/2	5	240	ECN3311BAA	ECN3312BAA	ECN3314BAA	ECN3318BAA	AN700DN022B
	460	10	7-1/2	480	ECN3311CAA	ECN3312CAA	ECN3314CAA	ECN3318CAA	AN700DN022C
	575	10	7-1/2	600	ECN3311DAA	ECN3312DAA	ECN3314DAA	ECN3318DAA	AN700DN022D
2	—	—	—	120	ECN3321AAA	ECN3322AAA	ECN3324AAA	ECN3328AAA	AN700GN022A
	200	10	7-1/2	208	ECN3321EAA	ECN3322EAA	ECN3324EAA	ECN3328EAA	AN700GN022E
	230	15	10	240	ECN3321BAA	ECN3322BAA	ECN3324BAA	ECN3328BAA	AN700GN022B
	460	25	20	480	ECN3321CAA	ECN3322CAA	ECN3324CAA	ECN3328CAA	AN700GN022C
	575	25	20	600	ECN3321DAA	ECN3322DAA	ECN3324DAA	ECN3328DAA	AN700GN022D
3	—	—	—	120	ECN3331AAA	ECN3332AAA	ECN3334AAA	ECN3338AAA	AN700KN022A
	200	25	20	208	ECN3331EAA	ECN3332EAA	ECN3334EAA	ECN3338EAA	AN700KN022E
	230	30	25	240	ECN3331BAA	ECN3332BAA	ECN3334BAA	ECN3338BAA	AN700KN022B
	460	50	40	480	ECN3331CAA	ECN3332CAA	ECN3334CAA	ECN3338CAA	AN700KN022C
	575	50	40	600	ECN3331DAA	ECN3332DAA	ECN3334DAA	ECN3338DAA	AN700KN022D
4	—	—	—	120	ECN3341AAA	ECN3342AAA	ECN3344AAA	ECN3348AAA	AN700NN022A
	200	40	30	208	ECN3341EAA	ECN3342EAA	ECN3344EAA	ECN3348EAA	AN700NN022E
	230	50	40	240	ECN3341BAA	ECN3342BAA	ECN3344BAA	ECN3348BAA	AN700NN022B
	460	100	75	480	ECN3341CAA	ECN3342CAA	ECN3344CAA	ECN3348CAA	AN700NN022C
	575	100	75	600	ECN3341DAA	ECN3342DAA	ECN3344DAA	ECN3348DAA	AN700NN022D
5	—	—	—	120	ECN3351AAA	ECN3352AAA	ECN3354AAA	ECN3358AAA	AN700SN022A
	200	75	60	208	ECN3351EAA	ECN3352EAA	ECN3354EAA	ECN3358EAA	AN700SN022E
	230	100	75	240	ECN3351BAA	ECN3352BAA	ECN3354BAA	ECN3358BAA	AN700SN022B
	460	200	150	480	ECN3351CAA	ECN3352CAA	ECN3354CAA	ECN3358CAA	AN700SN022C
	575	200	150	600	ECN3351DAA	ECN3352DAA	ECN3354DAA	ECN3358DAA	AN700SN022D
6	200	150	100	208	ECN3361EAA	ECN3362EAA	ECN3363EAA ②	ECN3368EAA	AN700TN022E
	230	200	150	240	ECN3361BAA	ECN3362BAA	ECN3363BAA ②	ECN3368BAA	AN700TN022B
	460	400	300	480	ECN3361CAA	ECN3362CAA	ECN3363CAA ②	ECN3368CAA	AN700TN022C
	575	400	300	600	ECN3361DAA	ECN3362DAA	ECN3363DAA ②	ECN3368DAA	AN700TN022D
7	230	300	225	240	ECN3371BAA	ECN3372BAA	ECN3373BAA ②	ECN3378BAA	AN700UN022B
	460	600	450	480	ECN3371CAA	ECN3372CAA	ECN3373CAA ②	ECN3378CAA	AN700UN022C
	575	600	450	600	ECN3371DAA	ECN3372DAA	ECN3373DAA ②	ECN3378DAA	AN700UN022D

Starters do not include heater packs. Select 2 cartons of 3 heater packs (2 overload relays — 1 for each speed). Heater Pack Selection, **Page 16-6**.

① Maximum horsepower rating of starters for 380V 50 Hz applications:

NEMA Size	0	1	2	3	4	5	6
Constant or Variable Torque	5	10	25	50	75	150	300
Constant Horsepower	3	7-1/2	20	40	60	100	200

② Type 4 (Painted steel) Sizes 6 – 7.

③ The Catalog Numbers listed in the Type 4X column are for Type 4X 304-Grade Stainless Steel, as indicated by the seventh digit **4**. Example: ECN3304AAA. To order Type 4X 316-Grade Stainless Steel, change that digit to **9**. To order Type 4 Painted Steel, change that digit to **3**. To order Nonmetallic, change that digit to **5**. For details on these Alternate Enclosures, see **Tab 14**.

Other Magnet Coils ..... **Page 3-20**
Cover Control ..... **Page 3-67**
Dimensions ..... **Page 15-4**
Accessories ..... **Page 16-4**
Modifications ..... **Page 16-40**
Technical Data ..... **Page 18-7**

Table 3-56. Class ECN34 — Non-combination 2-Speed 1-Winding Starter (CT or VT)

NEMA Size	Motor Voltage ①	Max. hp Rating	Magnet Coil Voltage	Type 1 General Purpose	Type 3R Rainproof	Type 4X ③ Watertight & Dust-Tight Stainless Steel	Type 12 Dust-Tight Industrial External Reset	Component Starter (Open)
				Catalog Number	Catalog Number	Catalog Number	Catalog Number	Catalog Number
0	—	—	120	ECN3401AAA	ECN3402AAA	ECN3404AAA	ECN3408AAA	AN700BN0218A
	200	3	208	ECN3401EAA	ECN3402EAA	ECN3404EAA	ECN3408EAA	AN700BN0218E
	230	3	240	ECN3401BAA	ECN3402BAA	ECN3404BAA	ECN3408BAA	AN700BN0218B
	460	5	480	ECN3401CAA	ECN3402CAA	ECN3404CAA	ECN3408CAA	AN700BN0218C
	575	5	600	ECN3401DAA	ECN3402DAA	ECN3404DAA	ECN3408DAA	AN700BN0218D
1	—	—	120	ECN3411AAA	ECN3412AAA	ECN3414AAA	ECN3418AAA	AN700DN0218A
	200	7-1/2	208	ECN3411EAA	ECN3412EAA	ECN3414EAA	ECN3418EAA	AN700DN0218E
	230	7-1/2	240	ECN3411BAA	ECN3412BAA	ECN3414BAA	ECN3418BAA	AN700DN0218B
	460	10	480	ECN3411CAA	ECN3412CAA	ECN3414CAA	ECN3418CAA	AN700DN0218C
	575	10	600	ECN3411DAA	ECN3412DAA	ECN3414DAA	ECN3418DAA	AN700DN0218D
2	—	—	120	ECN3421AAA	ECN3422AAA	ECN3424AAA	ECN3428AAA	AN700GN0218A
	200	10	208	ECN3421EAA	ECN3422EAA	ECN3424EAA	ECN3428EAA	AN700GN0218E
	230	15	240	ECN3421BAA	ECN3422BAA	ECN3424BAA	ECN3428BAA	AN700GN0218B
	460	25	480	ECN3421CAA	ECN3422CAA	ECN3424CAA	ECN3428CAA	AN700GN0218C
	575	25	600	ECN3421DAA	ECN3422DAA	ECN3424DAA	ECN3428DAA	AN700GN0218D
3	—	—	120	ECN3431AAA	ECN3432AAA	ECN3434AAA	ECN3438AAA	AN700KN0218A
	200	25	208	ECN3431EAA	ECN3432EAA	ECN3434EAA	ECN3438EAA	AN700KN0218E
	230	30	240	ECN3431BAA	ECN3432BAA	ECN3434BAA	ECN3438BAA	AN700KN0218B
	460	50	480	ECN3431CAA	ECN3432CAA	ECN3434CAA	ECN3438CAA	AN700KN0218C
	575	50	600	ECN3431DAA	ECN3432DAA	ECN3434DAA	ECN3438DAA	AN700KN0218D
4	—	—	120	ECN3441AAA	ECN3442AAA	ECN3444AAA	ECN3448AAA	AN700NN0218A
	200	40	208	ECN3441EAA	ECN3442EAA	ECN3444EAA	ECN3448EAA	AN700NN0218E
	230	50	240	ECN3441BAA	ECN3442BAA	ECN3444BAA	ECN3448BAA	AN700NN0218B
	460	100	480	ECN3441CAA	ECN3442CAA	ECN3444CAA	ECN3448CAA	AN700NN0218C
	575	100	600	ECN3441DAA	ECN3442DAA	ECN3444DAA	ECN3448DAA	AN700NN0218D
5	—	—	120	ECN3451AAA	ECN3452AAA	ECN3454AAA	ECN3458AAA	AN700SN0218A
	200	75	208	ECN3451EAA	ECN3452EAA	ECN3454EAA	ECN3458EAA	AN700SN0218E
	230	100	240	ECN3451BAA	ECN3452BAA	ECN3454BAA	ECN3458BAA	AN700SN0218B
	460	200	480	ECN3451CAA	ECN3452CAA	ECN3454CAA	ECN3458CAA	AN700SN0218C
	575	200	600	ECN3451DAA	ECN3452DAA	ECN3454DAA	ECN3458DAA	AN700SN0218D
6	200	150	208	ECN3461EAA	ECN3462EAA	ECN3463EAA ②	ECN3468EAA	AN700TN0218E
	230	200	240	ECN3461BAA	ECN3462BAA	ECN3463BAA ②	ECN3468BAA	AN700TN0218B
	460	400	480	ECN3461CAA	ECN3462CAA	ECN3463CAA ②	ECN3468CAA	AN700TN0218C
	575	400	600	ECN3461DAA	ECN3462DAA	ECN3463DAA ②	ECN3468DAA	AN700TN0218D

Starters do not include heater packs. Select 2 cartons of 3 heater packs (2 overload relays — 1 for each speed). Heater Pack Selection, see **Page 16-6**.

① Maximum horsepower rating of starters for 380V 50 Hz applications:

NEMA Size	0	1	2	3	4	5	6
Horsepower	5	10	25	50	75	150	300

② Type 4 (Painted steel) Size 6.

③ The Catalog Numbers listed in the Type 4X column are for Type 4X 304-Grade Stainless Steel, as indicated by the seventh digit **4**. Example: ECN3404AAA. To order Type 4X 316-Grade Stainless Steel, change that digit to **9**. To order Type 4 Painted Steel, change that digit to **3**. To order Nonmetallic, change that digit to **5**. For details on these Alternate Enclosures, see **Tab 14**.

Other Magnet Coils ..... **Page 3-20**
Cover Control ..... **Page 3-67**
Dimensions ..... **Page 15-4**
Accessories ..... **Page 16-4**
Modifications ..... **Page 16-40**
Technical Data ..... **Page 18-7**

Table 3-57. Class ECN35 — Non-combination 2-Speed 1-Winding Starter (Constant Horsepower)

NEMA Size	Motor Voltage ①	Max. hp Rating	Magnet Coil Voltage	Type 1 General Purpose	Type 3R Rainproof	Type 4X ③ Watertight & Dust-Tight Stainless Steel	Type 12 Dust-Tight Industrial External Reset	Component Starter (Open)
				Catalog Number	Catalog Number	Catalog Number	Catalog Number	Catalog Number
0	—	—	120	ECN3501AAA	ECN3502AAA	ECN3504AAA	ECN3508AAA	AN700BN0218A
	200	2	208	ECN3501EAA	ECN3502EAA	ECN3504EAA	ECN3508EAA	AN700BN0218E
	230	2	240	ECN3501BAA	ECN3502BAA	ECN3504BAA	ECN3508BAA	AN700BN0218B
	460	3	480	ECN3501CAA	ECN3502CAA	ECN3504CAA	ECN3508CAA	AN700BN0218C
	575	3	600	ECN3501DAA	ECN3502DAA	ECN3504DAA	ECN3508DAA	AN700BN0218D
1	—	—	120	ECN3511AAA	ECN3512AAA	ECN3514AAA	ECN3518AAA	AN700DN0218A
	200	5	208	ECN3511EAA	ECN3512EAA	ECN3514EAA	ECN3518EAA	AN700DN0218E
	230	5	240	ECN3511BAA	ECN3512BAA	ECN3514BAA	ECN3518BAA	AN700DN0218B
	460	7-1/2	480	ECN3511CAA	ECN3512CAA	ECN3514CAA	ECN3518CAA	AN700DN0218C
	575	7-1/2	600	ECN3511DAA	ECN3512DAA	ECN3514DAA	ECN3518DAA	AN700DN0218D
2	—	—	120	ECN3521AAA	ECN3522AAA	ECN3524AAA	ECN3528AAA	AN700GN0218A
	200	7-1/2	208	ECN3521EAA	ECN3522EAA	ECN3524EAA	ECN3528EAA	AN700GN0218E
	230	10	240	ECN3521BAA	ECN3522BAA	ECN3524BAA	ECN3528BAA	AN700GN0218B
	460	20	480	ECN3521CAA	ECN3522CAA	ECN3524CAA	ECN3528CAA	AN700GN0218C
	575	20	600	ECN3521DAA	ECN3522DAA	ECN3524DAA	ECN3528DAA	AN700GN0218D
3	—	—	120	ECN3531AAA	ECN3532AAA	ECN3534AAA	ECN3538AAA	AN700KN0218A
	200	20	208	ECN3531EAA	ECN3532EAA	ECN3534EAA	ECN3538EAA	AN700KN0218E
	230	25	240	ECN3531BAA	ECN3532BAA	ECN3534BAA	ECN3538BAA	AN700KN0218B
	460	40	480	ECN3531CAA	ECN3532CAA	ECN3534CAA	ECN3538CAA	AN700KN0218C
	575	40	600	ECN3531DAA	ECN3532DAA	ECN3534DAA	ECN3538DAA	AN700KN0218D
4	—	—	120	ECN3541AAA	ECN3542AAA	ECN3544AAA	ECN3548AAA	AN700NN0218A
	200	30	208	ECN3541EAA	ECN3542EAA	ECN3544EAA	ECN3548EAA	AN700NN0218E
	230	40	240	ECN3541BAA	ECN3542BAA	ECN3544BAA	ECN3548BAA	AN700NN0218B
	460	75	480	ECN3541CAA	ECN3542CAA	ECN3544CAA	ECN3548CAA	AN700NN0218C
	575	75	600	ECN3541DAA	ECN3542DAA	ECN3544DAA	ECN3548DAA	AN700NN0218D
5	—	—	120	ECN3551AAA	ECN3552AAA	ECN3554AAA	ECN3558AAA	AN700SN0218A
	200	60	208	ECN3551EAA	ECN3552EAA	ECN3554EAA	ECN3558EAA	AN700SN0218E
	230	75	240	ECN3551BAA	ECN3552BAA	ECN3554BAA	ECN3558BAA	AN700SN0218B
	460	150	480	ECN3551CAA	ECN3552CAA	ECN3554CAA	ECN3558CAA	AN700SN0218C
	575	150	600	ECN3551DAA	ECN3552DAA	ECN3554DAA	ECN3558DAA	AN700SN0218D
6	200	100	208	ECN3561EAA	ECN3562EAA	ECN3563EAA ②	ECN3568EAA	AN700TN0218E
	230	150	240	ECN3561BAA	ECN3562BAA	ECN3563BAA ②	ECN3568BAA	AN700TN0218B
	460	300	480	ECN3561CAA	ECN3562CAA	ECN3563CAA ②	ECN3568CAA	AN700TN0218C
	575	300	600	ECN3561DAA	ECN3562DAA	ECN3563DAA ②	ECN3568DAA	AN700TN0218D

Starters do not include heater packs. Select 2 cartons of 3 heater packs (2 overload relays — 1 for each speed). Heater Pack Selection, see **Page 16-6**.

① Maximum horsepower rating of starters for 380V 50 Hz applications:

NEMA Size	0	1	2	3	4	5	6
Horsepower	3	7-1/2	20	40	60	100	200

② Type 4 (Painted steel) Size 6.

③ The Catalog Numbers listed in the Type 4X column are for Type 4X 304-Grade Stainless Steel, as indicated by the seventh digit **4**. Example: ECN3504AAA. To order Type 4X 316-Grade Stainless Steel, change that digit to **9**. To order Type 4 Painted Steel, change that digit to **3**. To order Nonmetallic, change that digit to **5**. For details on these Alternate Enclosures, see **Tab 14**.

Other Magnet Coils ..... **Page 3-20**
Cover Control ..... **Page 3-67**
Dimensions ..... **Page 15-4**
Accessories ..... **Page 16-4**
Modifications ..... **Page 16-40**
Technical Data ..... **Page 18-7**

Features

- Choice of Fusible/Non-fusible Combination with Disconnect Switch or Combination HMCP or Magnetic Trip Circuit Breaker
- 3-Phase Magnetic, 3-Pole
- Interchangeable Heater OLR
- 600V Maximum

Product Selection

Table 3-58. Class ECN36 — Combination 2-Speed 2-Winding Starter — Fusible Disconnect

NEMA Size	Motor Voltage ①	Maximum hp Rating		Magnet Coil Voltage	Fuse Clip Amperes	Type 1 General Purpose	Type 3R Rainproof	Type 4X ③ Watertight & Dust-Tight Stainless Steel	Type 12 Dust-Tight Industrial External Reset	Component Starter (Open)
		Constant or Variable Torque	Constant Horsepower			Catalog Number	Catalog Number	Catalog Number	Catalog Number	Catalog Number
0	—	—	—	120	30A	ECN3601AAB	ECN3602AAB	ECN3604AAB	ECN3608AAB	AN700BN022A
	200	3	2	208		ECN3601EAB	ECN3602EAB	ECN3604EAB	ECN3608EAB	AN700BN022E
	230	3	2	240		ECN3601BAB	ECN3602BAB	ECN3604BAB	ECN3608BAB	AN700BN022B
	460	5	3	480		ECN3601CAC	ECN3602CAC	ECN3604CAC	ECN3608CAC	AN700BN022C
	575	5	3	600		ECN3601DAC	ECN3602DAC	ECN3604DAC	ECN3608DAC	AN700BN022D
1	—	—	—	120	30A	ECN3611AAB	ECN3612AAB	ECN3614AAB	ECN3618AAB	AN700DN022A
	200	7-1/2	5	208		ECN3611EAB	ECN3612EAB	ECN3614EAB	ECN3618EAB	AN700DN022E
	230	7-1/2	5	240		ECN3611BAB	ECN3612BAB	ECN3614BAB	ECN3618BAB	AN700DN022B
	460	10	7-1/2	480		ECN3611CAC	ECN3612CAC	ECN3614CAC	ECN3618CAC	AN700DN022C
	575	10	7-1/2	600		ECN3611DAC	ECN3612DAC	ECN3614DAC	ECN3618DAC	AN700DN022D
2	—	—	—	120	60A	ECN3621AAD	ECN3622AAD	ECN3624AAD	ECN3628AAD	AN700GN022A
	200	10	7-1/2	208		ECN3621EAD	ECN3622EAD	ECN3624EAD	ECN3628EAD	AN700GN022E
	230	15	10	240		ECN3621BAD	ECN3622BAD	ECN3624BAD	ECN3628BAD	AN700GN022B
	460	25	20	480		ECN3621CAE	ECN3622CAE	ECN3624CAE	ECN3628CAE	AN700GN022C
	575	25	20	600		ECN3621DAE	ECN3622DAE	ECN3624DAE	ECN3628DAE	AN700GN022D
3	—	—	—	120	100A	ECN3631AAF	ECN3632AAF	ECN3634AAF	ECN3638AAF	AN700KN022A
	200	25	20	208		ECN3631EAF	ECN3632EAF	ECN3634EAF	ECN3638EAF	AN700KN022E
	230	30	25	240		ECN3631BAF	ECN3632BAF	ECN3634BAF	ECN3638BAF	AN700KN022B
	460	50	40	480		ECN3631CAG	ECN3632CAG	ECN3634CAG	ECN3638CAG	AN700KN022C
	575	50	40	600		ECN3631DAG	ECN3632DAG	ECN3634DAG	ECN3638DAG	AN700KN022D
4	—	—	—	120	200A	ECN3641AAH	ECN3642AAH	ECN3644AAH	ECN3648AAH	AN700NN022A
	200	40	30	208		ECN3641EAH	ECN3642EAH	ECN3644EAH	ECN3648EAH	AN700NN022E
	230	50	40	240		ECN3641BAH	ECN3642BAH	ECN3644BAH	ECN3648BAH	AN700NN022B
	460	100	75	480		ECN3641CAJ	ECN3642CAJ	ECN3644CAJ	ECN3648CAJ	AN700NN022C
	575	100	75	600		ECN3641DAJ	ECN3642DAJ	ECN3644DAJ	ECN3648DAJ	AN700NN022D
5	—	—	—	120	400A	ECN3651AAK	ECN3652AAK	ECN3654AAK	ECN3658AAK	AN700SN022A
	200	75	60	208		ECN3651EAK	ECN3652EAK	ECN3654EAK	ECN3658EAK	AN700SN022E
	230	100	75	240		ECN3651BAK	ECN3652BAK	ECN3654BAK	ECN3658BAK	AN700SN022B
	460	200	150	480		ECN3651CAL	ECN3652CAL	ECN3654CAL	ECN3658CAL	AN700SN022C
	575	200	150	600		ECN3651DAL	ECN3652DAL	ECN3654DAL	ECN3658DAL	AN700SN022D
6	200	150	100	208	600A	ECN3661EAM	ECN3662EAM	ECN3663EAM ②	ECN3668EAM	AN700TN022E
	230	200	150	240		ECN3661BAM	ECN3662BAM	ECN3663BAM ②	ECN3668BAM	AN700TN022B
	460	400	300	480		ECN3661CAN	ECN3662CAN	ECN3663CAN ②	ECN3668CAN	AN700TN022C
	575	400	300	600		ECN3661DAN	ECN3662DAN	ECN3663DAN ②	ECN3668DAN	AN700TN022D

Starters do not include heater packs. Select 2 cartons of 3 heater packs (2 overload relays — 1 for each speed). Heater Pack Selection, **Page 16-6**.

① Maximum horsepower rating of starters for 380V 50 Hz applications:

NEMA Size	0	1	2	3	4	5	6
Constant or Variable Torque	5	10	25	50	75	150	300
Constant Horsepower	3	7-1/2	20	40	60	100	200

② Type 4 (Painted steel) Size 6.

③ The Catalog Numbers listed in the Type 4X column are for Type 4X 304-Grade Stainless Steel, as indicated by the seventh digit **4**. Example: ECN3604AAB. To order Type 4X 316-Grade Stainless Steel, change that digit to **9**. To order Type 4 Painted Steel, change that digit to **3**. To order Nonmetallic, change that digit to **5**. For details on these Alternate Enclosures, see **Tab 14**.

Other Magnet Coils ..... **Page 3-20**
Cover Control ..... **Page 3-67**
Dimensions ..... **Page 15-4**
Accessories ..... **Page 16-4**
Modifications ..... **Page 16-40**
Technical Data ..... **Page 18-7**

Table 3-59. Class ECN36 — Combination 2-Speed 2-Winding Starter — Non-fusible Disconnect

NEMA Size	Motor Voltage ①	Maximum hp Rating		Magnet Coil Voltage	Disconnect Amperes	Type 1 General Purpose	Type 3R Rainproof	Type 4X ③ Watertight & Dust-Tight Stainless Steel	Type 12 Dust-Tight Industrial External Reset	Component Starter (Open)
		Constant or Variable Torque	Constant Horsepower			Catalog Number	Catalog Number	Catalog Number	Catalog Number	Catalog Number
0	—	—	—	120	30A	ECN3601AAA	ECN3602AAA	ECN3604AAA	ECN3608AAA	AN700BN022A
	200	3	2	208		ECN3601EAA	ECN3602EAA	ECN3604EAA	ECN3608EAA	AN700BN022E
	230	3	2	240		ECN3601BAA	ECN3602BAA	ECN3604BAA	ECN3608BAA	AN700BN022B
	460	5	3	480		ECN3601CAA	ECN3602CAA	ECN3604CAA	ECN3608CAA	AN700BN022C
	575	5	3	600		ECN3601DAA	ECN3602DAA	ECN3604DAA	ECN3608DAA	AN700BN022D
1	—	—	—	120	30A	ECN3611AAA	ECN3612AAA	ECN3614AAA	ECN3618AAA	AN700DN022A
	200	7-1/2	5	208		ECN3611EAA	ECN3612EAA	ECN3614EAA	ECN3618EAA	AN700DN022E
	230	7-1/2	5	240		ECN3611BAA	ECN3612BAA	ECN3614BAA	ECN3618BAA	AN700DN022B
	460	10	7-1/2	480		ECN3611CAA	ECN3612CAA	ECN3614CAA	ECN3618CAA	AN700DN022C
	575	10	7-1/2	600		ECN3611DAA	ECN3612DAA	ECN3614DAA	ECN3618DAA	AN700DN022D
2	—	—	—	120	60A	ECN3621AAA	ECN3622AAA	ECN3624AAA	ECN3628AAA	AN700GN022A
	200	10	7-1/2	208		ECN3621EAA	ECN3622EAA	ECN3624EAA	ECN3628EAA	AN700GN022E
	230	15	10	240		ECN3621BAA	ECN3622BAA	ECN3624BAA	ECN3628BAA	AN700GN022B
	460	25	20	480		ECN3621CAA	ECN3622CAA	ECN3624CAA	ECN3628CAA	AN700GN022C
	575	25	20	600		ECN3621DAA	ECN3622DAA	ECN3624DAA	ECN3628DAA	AN700GN022D
3	—	—	—	120	100A	ECN3631AAA	ECN3632AAA	ECN3634AAA	ECN3638AAA	AN700KN022A
	200	25	20	208		ECN3631EAA	ECN3632EAA	ECN3634EAA	ECN3638EAA	AN700KN022E
	230	30	25	240		ECN3631BAA	ECN3632BAA	ECN3634BAA	ECN3638BAA	AN700KN022B
	460	50	40	480		ECN3631CAA	ECN3632CAA	ECN3634CAA	ECN3638CAA	AN700KN022C
	575	50	40	600		ECN3631DAA	ECN3632DAA	ECN3634DAA	ECN3638DAA	AN700KN022D
4	—	—	—	120	200A	ECN3641AAA	ECN3642AAA	ECN3644AAA	ECN3648AAA	AN700NN022A
	200	40	30	208		ECN3641EAA	ECN3642EAA	ECN3644EAA	ECN3648EAA	AN700NN022E
	230	50	40	240		ECN3641BAA	ECN3642BAA	ECN3644BAA	ECN3648BAA	AN700NN022B
	460	100	75	480		ECN3641CAA	ECN3642CAA	ECN3644CAA	ECN3648CAA	AN700NN022C
	575	100	75	600		ECN3641DAA	ECN3642DAA	ECN3644DAA	ECN3648DAA	AN700NN022D
5	—	—	—	120	400A	ECN3651AAA	ECN3652AAA	ECN3654AAA	ECN3658AAA	AN700SN022A
	200	75	60	208		ECN3651EAA	ECN3652EAA	ECN3654EAA	ECN3658EAA	AN700SN022E
	230	100	75	240		ECN3651BAA	ECN3652BAA	ECN3654BAA	ECN3658BAA	AN700SN022B
	460	200	150	480		ECN3651CAA	ECN3652CAA	ECN3654CAA	ECN3658CAA	AN700SN022C
	575	200	150	600		ECN3651DAA	ECN3652DAA	ECN3654DAA	ECN3658DAA	AN700SN022D
6	200	150	100	208	600A	ECN3661EAA	ECN3662EAA	ECN3663EAA ②	ECN3668EAA	AN700TN022E
	230	200	150	240		ECN3661BAA	ECN3662BAA	ECN3663BAA ②	ECN3668BAA	AN700TN022B
	460	400	300	480		ECN3661CAA	ECN3662CAA	ECN3663CAA ②	ECN3668CAA	AN700TN022C
	575	400	300	600		ECN3661DAA	ECN3662DAA	ECN3663DAA ②	ECN3668DAA	AN700TN022D

Starters do not include heater packs. Select 2 cartons of 3 heater packs (2 overload relays — 1 for each speed). Heater Pack Selection, **Page 16-6**.

① Maximum horsepower rating of starters for 380V 50 Hz applications:

NEMA Size	0	1	2	3	4	5	6
Constant or Variable Torque	5	10	25	50	75	150	300
Constant Horsepower	3	7-1/2	20	40	60	100	200

② Type 4 (Painted steel) Size 6.

③ The Catalog Numbers listed in the Type 4X column are for Type 4X 304-Grade Stainless Steel, as indicated by the seventh digit **4**. Example: ECN3604AAA. To order Type 4X 316-Grade Stainless Steel, change that digit to **9**. To order Type 4 Painted Steel, change that digit to **3**. To order Nonmetallic, change that digit to **5**. For details on these Alternate Enclosures, see **Tab 14**.

Other Magnet Coils ..... **Page 3-20**
Cover Control ..... **Page 3-67**
Dimensions ..... **Page 15-4**
Accessories ..... **Page 16-4**
Modifications ..... **Page 16-40**
Technical Data ..... **Page 18-7**

Table 3-60. Class ECN37 — Combination 2-Speed 1-Winding Starter (CT or VT) — Fusible Disconnect

NEMA Size	Motor Voltage ①	Max. hp Rating	Magnet Coil Voltage	Fuse Clip Amperes	Type 1 General Purpose	Type 3R Rainproof	Type 4X ③ Watertight & Dust-Tight Stainless Steel	Type 12 Dust-Tight Industrial External Reset	Component Starter (Open)
					Catalog Number	Catalog Number	Catalog Number	Catalog Number	Catalog Number
0	—	—	120	30A	ECN3701AAB	ECN3702AAB	ECN3704AAB	ECN3708AAB	AN700BN0218A
	200	3	208		ECN3701EAB	ECN3702EAB	ECN3704EAB	ECN3708EAB	AN700BN0218E
	230	3	240		ECN3701BAB	ECN3702BAB	ECN3704BAB	ECN3708BAB	AN700BN0218B
	460	5	480		ECN3701CAC	ECN3702CAC	ECN3704CAC	ECN3708CAC	AN700BN0218C
	575	5	600		ECN3701DAC	ECN3702DAC	ECN3704DAC	ECN3708DAC	AN700BN0218D
1	—	—	120	30A	ECN3711AAB	ECN3712AAB	ECN3714AAB	ECN3718AAB	AN700DN0218A
	200	7-1/2	208		ECN3711EAB	ECN3712EAB	ECN3714EAB	ECN3718EAB	AN700DN0218E
	230	7-1/2	240		ECN3711BAB	ECN3712BAB	ECN3714BAB	ECN3718BAB	AN700DN0218B
	460	10	480		ECN3711CAC	ECN3712CAC	ECN3714CAC	ECN3718CAC	AN700DN0218C
	575	10	600		ECN3711DAC	ECN3712DAC	ECN3714DAC	ECN3718DAC	AN700DN0218D
2	—	—	120	60A	ECN3721AAD	ECN3722AAD	ECN3724AAD	ECN3728AAD	AN700GN0218A
	200	10	208		ECN3721EAD	ECN3722EAD	ECN3724EAD	ECN3728EAD	AN700GN0218E
	230	15	240		ECN3721BAD	ECN3722BAD	ECN3724BAD	ECN3728BAD	AN700GN0218B
	460	25	480		ECN3721CAE	ECN3722CAE	ECN3724CAE	ECN3728CAE	AN700GN0218C
	575	25	600		ECN3721DAE	ECN3722DAE	ECN3724DAE	ECN3728DAE	AN700GN0218D
3	—	—	120	100A	ECN3731AAF	ECN3732AAF	ECN3734AAF	ECN3738AAF	AN700KN0218A
	200	25	208		ECN3731EAF	ECN3732EAF	ECN3734EAF	ECN3738EAF	AN700KN0218E
	230	30	240		ECN3731BAF	ECN3732BAF	ECN3734BAF	ECN3738BAF	AN700KN0218B
	460	50	480		ECN3731CAG	ECN3732CAG	ECN3734CAG	ECN3738CAG	AN700KN0218C
	575	50	600		ECN3731DAG	ECN3732DAG	ECN3734DAG	ECN3738DAG	AN700KN0218D
4	—	—	120	200A	ECN3741AAH	ECN3742AAH	ECN3744AAH	ECN3748AAH	AN700NN0218A
	200	40	208		ECN3741EAH	ECN3742EAH	ECN3744EAH	ECN3748EAH	AN700NN0218E
	230	50	240		ECN3741BAH	ECN3742BAH	ECN3744BAH	ECN3748BAH	AN700NN0218B
	460	100	480		ECN3741CAJ	ECN3742CAJ	ECN3744CAJ	ECN3748CAJ	AN700NN0218C
	575	100	600		ECN3741DAJ	ECN3742DAJ	ECN3744DAJ	ECN3748DAJ	AN700NN0218D
5	—	—	120	400A	ECN3751AAK	ECN3752AAK	ECN3754AAK	ECN3758AAK	AN700SN0218A
	200	75	208		ECN3751EAK	ECN3752EAK	ECN3754EAK	ECN3758EAK	AN700SN0218E
	230	100	240		ECN3751BAK	ECN3752BAK	ECN3754BAK	ECN3758BAK	AN700SN0218B
	460	200	480		ECN3751CAL	ECN3752CAL	ECN3754CAL	ECN3758CAL	AN700SN0218C
	575	200	600		ECN3751DAL	ECN3752DAL	ECN3754DAL	ECN3758DAL	AN700SN0218D
6	200	150	208	600A	ECN3761EAM	ECN3762EAM	ECN3763EAM ②	ECN3768EAM	AN700TN0218E
	230	200	240		ECN3761BAM	ECN3762BAM	ECN3763BAM ②	ECN3768BAM	AN700TN0218B
	460	400	480		ECN3761CAN	ECN3762CAN	ECN3763CAN ②	ECN3768CAN	AN700TN0218C
	575	400	600		ECN3761DAN	ECN3762DAN	ECN3763DAN ②	ECN3768DAN	AN700TN0218D

Starters do not include heater packs. Select 2 cartons of 3 heater packs (2 overload relays — 1 for each speed). Heater Pack Selection, see **Page 16-6**.

① Maximum horsepower rating of starters for 380V 50 Hz applications:

NEMA Size	0	1	2	3	4	5	6
Horsepower	5	10	25	50	75	150	300

② Type 4 (Painted steel) Size 6.

③ The Catalog Numbers listed in the Type 4X column are for Type 4X 304-Grade Stainless Steel, as indicated by the seventh digit **4**. Example: ECN3704AAB. To order Type 4X 316-Grade Stainless Steel, change that digit to **9**. To order Type 4 Painted Steel, change that digit to **3**. To order Nonmetallic, change that digit to **5**. For details on these Alternate Enclosures, see **Tab 14**.

Other Magnet Coils ..... **Page 3-20**
Cover Control ..... **Page 3-67**
Dimensions ..... **Page 15-4**
Accessories ..... **Page 16-4**
Modifications ..... **Page 16-40**
Technical Data ..... **Page 18-7**

Table 3-61. Class ECN37 — Combination 2-Speed 1-Winding Starter (CT or VT) — Non-fusible Disconnect

NEMA Size	Motor Voltage ①	Max. hp Rating	Magnet Coil Voltage	Disconnect Amperes	Type 1 General Purpose	Type 3R Rainproof	Type 4X ③ Watertight & Dust-Tight Stainless Steel	Type 12 Dust-Tight Industrial External Reset	Component Starter (Open)
					Catalog Number	Catalog Number	Catalog Number	Catalog Number	Catalog Number
0	—	—	120	30A	ECN3701AAA	ECN3702AAA	ECN3704AAA	ECN3708AAA	AN700BN0218A
	200	3	208		ECN3701EAA	ECN3702EAA	ECN3704EAA	ECN3708EAA	AN700BN0218E
	230	3	240		ECN3701BAA	ECN3702BAA	ECN3704BAA	ECN3708BAA	AN700BN0218B
	460	5	480		ECN3701CAA	ECN3702CAA	ECN3704CAA	ECN3708CAA	AN700BN0218C
	575	5	600		ECN3701DAA	ECN3702DAA	ECN3704DAA	ECN3708DAA	AN700BN0218D
1	—	—	120	30A	ECN3711AAA	ECN3712AAA	ECN3714AAA	ECN3718AAA	AN700DN0218A
	200	7-1/2	208		ECN3711EAA	ECN3712EAA	ECN3714EAA	ECN3718EAA	AN700DN0218E
	230	7-1/2	240		ECN3711BAA	ECN3712BAA	ECN3714BAA	ECN3718BAA	AN700DN0218B
	460	10	480		ECN3711CAA	ECN3712CAA	ECN3714CAA	ECN3718CAA	AN700DN0218C
	575	10	600		ECN3711DAA	ECN3712DAA	ECN3714DAA	ECN3718DAA	AN700DN0218D
2	—	—	120	60A	ECN3721AAA	ECN3722AAA	ECN3724AAA	ECN3728AAA	AN700GN0218A
	200	10	208		ECN3721EAA	ECN3722EAA	ECN3724EAA	ECN3728EAA	AN700GN0218E
	230	15	240		ECN3721BAA	ECN3722BAA	ECN3724BAA	ECN3728BAA	AN700GN0218B
	460	25	480		ECN3721CAA	ECN3722CAA	ECN3724CAA	ECN3728CAA	AN700GN0218C
	575	25	600		ECN3721DAA	ECN3722DAA	ECN3724DAA	ECN3728DAA	AN700GN0218D
3	—	—	120	100A	ECN3731AAA	ECN3732AAA	ECN3734AAA	ECN3738AAA	AN700KN0218A
	200	25	208		ECN3731EAA	ECN3732EAA	ECN3734EAA	ECN3738EAA	AN700KN0218E
	230	30	240		ECN3731BAA	ECN3732BAA	ECN3734BAA	ECN3738BAA	AN700KN0218B
	460	50	480		ECN3731CAA	ECN3732CAA	ECN3734CAA	ECN3738CAA	AN700KN0218C
	575	50	600		ECN3731DAA	ECN3732DAA	ECN3734DAA	ECN3738DAA	AN700KN0218D
4	—	—	120	200A	ECN3741AAA	ECN3742AAA	ECN3744AAA	ECN3748AAA	AN700NN0218A
	200	40	208		ECN3741EAA	ECN3742EAA	ECN3744EAA	ECN3748EAA	AN700NN0218E
	230	50	240		ECN3741BAA	ECN3742BAA	ECN3744BAA	ECN3748BAA	AN700NN0218B
	460	100	480		ECN3741CAA	ECN3742CAA	ECN3744CAA	ECN3748CAA	AN700NN0218C
	575	100	600		ECN3741DAA	ECN3742DAA	ECN3744DAA	ECN3748DAA	AN700NN0218D
5	—	—	120	400A	ECN3751AAA	ECN3752AAA	ECN3754AAA	ECN3758AAA	AN700SN0218A
	200	75	208		ECN3751EAA	ECN3752EAA	ECN3754EAA	ECN3758EAA	AN700SN0218E
	230	100	240		ECN3751BAA	ECN3752BAA	ECN3754BAA	ECN3758BAA	AN700SN0218B
	460	200	480		ECN3751CAA	ECN3752CAA	ECN3754CAA	ECN3758CAA	AN700SN0218C
	575	200	600		ECN3751DAA	ECN3752DAA	ECN3754DAA	ECN3758DAA	AN700SN0218D
6	200	150	208	600A	ECN3761EAA	ECN3762EAA	ECN3763EAA ②	ECN3768EAA	AN700TN0218E
	230	200	240		ECN3761BAA	ECN3762BAA	ENC3763BAA ②	ECN3768BAA	AN700TN0218B
	460	400	480		ECN3761CAA	ECN3762CAA	ENC3763CAA ②	ECN3768CAA	AN700TN0218C
	575	400	600		ECN3761DAA	ECN3762DAA	ENC3763DAA ②	ECN3768DAA	AN700TN0218D

Starters do not include heater packs. Select 2 cartons of 3 heater packs (2 overload relays — 1 for each speed). Heater Pack Selection, see **Page 16-6**.

① Maximum horsepower rating of starters for 380V 50 Hz applications:

NEMA Size	0	1	2	3	4	5	6
Horsepower	5	10	25	50	75	150	300

② Type 4 (Painted steel) Size 6.

③ The Catalog Numbers listed in the Type 4X column are for Type 4X 304-Grade Stainless Steel, as indicated by the seventh digit **4**. Example: ECN3704AAA. To order Type 4X 316-Grade Stainless Steel, change that digit to **9**. To order Type 4 Painted Steel, change that digit to **3**. To order Nonmetallic, change that digit to **5**. For details on these Alternate Enclosures, see **Tab 14**.

Other Magnet Coils ..... **Page 3-20**
Cover Control ..... **Page 3-67**
Dimensions ..... **Page 15-4**
Accessories ..... **Page 16-4**
Modifications ..... **Page 16-40**
Technical Data ..... **Page 18-7**

Table 3-62. Class ECN38 — Combination 2-Speed 1-Winding Starter (Constant Horsepower) — Fusible Disconnect

NEMA Size	Motor Voltage ①	Max. hp Rating	Magnet Coil Voltage	Fuse Clip Amperes	Type 1 General Purpose	Type 3R Rainproof	Type 4X ③ Watertight & Dust-Tight Stainless Steel	Type 12 Dust-Tight Industrial External Reset	Component Starter (Open)
					Catalog Number	Catalog Number	Catalog Number	Catalog Number	Catalog Number
0	—	—	120	30A	ECN3801AAB	ECN3802AAB	ECN3804AAB	ECN3808AAB	AN700BN0218A
	200	2	208		ECN3801EAB	ECN3802EAB	ECN3804EAB	ECN3808EAB	AN700BN0218E
	230	2	240		ECN3801BAB	ECN3802BAB	ECN3804BAB	ECN3808BAB	AN700BN0218B
	460	3	480		ECN3801CAC	ECN3802CAC	ECN3804CAC	ECN3808CAC	AN700BN0218C
	575	3	600		ECN3801DAC	ECN3802DAC	ECN3804DAC	ECN3808DAC	AN700BN0218D
1	—	—	120	30A	ECN3811AAB	ECN3812AAB	ECN3814AAB	ECN3818AAB	AN700DN0218A
	200	5	208		ECN3811EAB	ECN3812EAB	ECN3814EAB	ECN3818EAB	AN700DN0218E
	230	5	240		ECN3811BAB	ECN3812BAB	ECN3814BAB	ECN3818BAB	AN700DN0218B
	460	7-1/2	480		ECN3811CAC	ECN3812CAC	ECN3814CAC	ECN3818CAC	AN700DN0218C
	575	7-1/2	600		ECN3811DAC	ECN3812DAC	ECN3814DAC	ECN3818DAC	AN700DN0218D
2	—	—	120	60A	ECN3821AAD	ECN3822AAD	ECN3824AAD	ECN3828AAD	AN700GN0218A
	200	7-1/2	208		ECN3821EAD	ECN3822EAD	ECN3824EAD	ECN3828EAD	AN700GN0218E
	230	10	240		ECN3821BAD	ECN3822BAD	ECN3824BAD	ECN3828BAD	AN700GN0218B
	460	20	480		ECN3821CAE	ECN3822CAE	ECN3824CAE	ECN3828CAE	AN700GN0218C
	575	20	600		ECN3821DAE	ECN3822DAE	ECN3824DAE	ECN3828DAE	AN700GN0218D
3	—	—	120	100A	ECN3831AAF	ECN3832AAF	ECN3834AAF	ECN3838AAF	AN700KN0218A
	200	20	208		ECN3831EAF	ECN3832EAF	ECN3834EAF	ECN3838EAF	AN700KN0218E
	230	25	240		ECN3831BAF	ECN3832BAF	ECN3834BAF	ECN3838BAF	AN700KN0218B
	460	40	480		ECN3831CAG	ECN3832CAG	ECN3834CAG	ECN3838CAG	AN700KN0218C
	575	40	600		ECN3831DAG	ECN3832DAG	ECN3834DAG	ECN3838DAG	AN700KN0218D
4	—	—	120	200A	ECN3841AAH	ECN3842AAH	ECN3844AAH	ECN3848AAH	AN700NN0218A
	200	30	208		ECN3841EAH	ECN3842EAH	ECN3844EAH	ECN3848EAH	AN700NN0218E
	230	40	240		ECN3841BAH	ECN3842BAH	ECN3844BAH	ECN3848BAH	AN700NN0218B
	460	75	480		ECN3841CAJ	ECN3842CAJ	ECN3844CAJ	ECN3848CAJ	AN700NN0218C
	575	75	600		ECN3841DAJ	ECN3842DAJ	ECN3844DAJ	ECN3848DAJ	AN700NN0218D
5	—	—	120	400A	ECN3851AAK	ECN3852AAK	ECN3854AAK	ECN3858AAK	AN700SN0218A
	200	60	208		ECN3851EAK	ECN3852EAK	ECN3854EAK	ECN3858EAK	AN700SN0218E
	230	75	240		ECN3851BAK	ECN3852BAK	ECN3854BAK	ECN3858BAK	AN700SN0218B
	460	150	480		ECN3851CAL	ECN3852CAL	ECN3854CAL	ECN3858CAL	AN700SN0218C
	575	150	600		ECN3851DAL	ECN3852DAL	ECN3854DAL	ECN3858DAL	AN700SN0218D
6	200	100	208	600A	ECN3861EAM	ECN3862EAM	ECN3863EAM ②	ECN3868EAM	AN700TN0218E
	230	150	240		ECN3861BAM	ECN3862BAM	ECN3863BAM ②	ECN3868BAM	AN700TN0218B
	460	300	480		ECN3861CAN	ECN3862CAL	ECN3863CAN ②	ECN3868CAN	AN700TN0218C
	575	300	600		ECN3861DAN	ECN3862DAL	ECN3863DAN ②	ECN3868DAN	AN700TN0218D

Starters do not include heater packs. Select 2 cartons of 3 heater packs (2 overload relays — 1 for each speed). Heater Pack Selection, see **Page 16-6**.

① Maximum horsepower rating of starters for 380V 50 Hz applications:

NEMA Size	0	1	2	3	4	5	6
Horsepower	3	7-1/2	20	40	60	100	200

② Type 4 (Painted steel) Size 6.

③ The Catalog Numbers listed in the Type 4X column are for Type 4X 304-Grade Stainless Steel, as indicated by the seventh digit **4**. Example: ECN3804AAB. To order Type 4X 316-Grade Stainless Steel, change that digit to **9**. To order Type 4 Painted Steel, change that digit to **3**. To order Nonmetallic, change that digit to **5**. For details on these Alternate Enclosures, see **Tab 14**.

Other Magnet Coils ..... **Page 3-20**
Cover Control ..... **Page 3-67**
Dimensions ..... **Page 15-4**
Accessories ..... **Page 16-4**
Modifications ..... **Page 16-40**
Technical Data ..... **Page 18-7**

Table 3-63. Class ECN38 — Combination 2-Speed 1-Winding Starter (Constant Horsepower) — Non-fusible Disconnect

NEMA Size	Motor Voltage ①	Max. hp Rating	Magnet Coil Voltage	Disconnect Amperes	Type 1 General Purpose	Type 3R Rainproof	Type 4X ③ Watertight & Dust-Tight Stainless Steel	Type 12 Dust-Tight Industrial External Reset	Component Starter (Open)
					Catalog Number	Catalog Number	Catalog Number	Catalog Number	Catalog Number
0	—	—	120	30A	ECN3801AAA	ECN3802AAA	ECN3804AAA	ECN3808AAA	AN700BN0218A
	200	2	208		ECN3801EAA	ECN3802EAA	ECN3804EAA	ECN3808EAA	AN700BN0218E
	230	2	240		ECN3801BAA	ECN3802BAA	ECN3804BAA	ECN3808BAA	AN700BN0218B
	460	3	480		ECN3801CAA	ECN3802CAA	ECN3804CAA	ECN3808CAA	AN700BN0218C
	575	3	600		ECN3801DAA	ECN3802DAA	ECN3804DAA	ECN3808DAA	AN700BN0218D
1	—	—	120	30A	ECN3811AAA	ECN3812AAA	ECN3814AAA	ECN3818AAA	AN700DN0218A
	200	5	208		ECN3811EAA	ECN3812EAA	ECN3814EAA	ECN3818EAA	AN700DN0218E
	230	5	240		ECN3811BAA	ECN3812BAA	ECN3814BAA	ECN3818BAA	AN700DN0218B
	460	7-1/2	480		ECN3811CAA	ECN3812CAA	ECN3814CAA	ECN3818CAA	AN700DN0218C
	575	7-1/2	600		ECN3811DAA	ECN3812DAA	ECN3814DAA	ECN3818DAA	AN700DN0218D
2	—	—	120	60A	ECN3821AAA	ECN3822AAA	ECN3824AAA	ECN3828AAA	AN700GN0218A
	200	7-1/2	208		ECN3821EAA	ECN3822EAA	ECN3824EAA	ECN3828EAA	AN700GN0218E
	230	10	240		ECN3821BAA	ECN3822BAA	ECN3824BAA	ECN3828BAA	AN700GN0218B
	460	20	480		ECN3821CAA	ECN3822CAA	ECN3824CAA	ECN3828CAA	AN700GN0218C
	575	20	600		ECN3821DAA	ECN3822DAA	ECN3824DAA	ECN3828DAA	AN700GN0218D
3	—	—	120	100A	ECN3831AAA	ECN3832AAA	ECN3834AAA	ECN3838AAA	AN700KN0218A
	200	20	208		ECN3831EAA	ECN3832EAA	ECN3834EAA	ECN3838EAA	AN700KN0218E
	230	25	240		ECN3831BAA	ECN3832BAA	ECN3834BAA	ECN3838BAA	AN700KN0218B
	460	40	480		ECN3831CAA	ECN3832CAA	ECN3834CAA	ECN3838CAA	AN700KN0218C
	575	40	600		ECN3831DAA	ECN3832DAA	ECN3834DAA	ECN3838DAA	AN700KN0218D
4	—	—	120	200A	ECN3841AAA	ECN3842AAA	ECN3844AAA	ECN3848AAA	AN700NN0218A
	200	30	208		ECN3841EAA	ECN3842EAA	ECN3844EAA	ECN3848EAA	AN700NN0218E
	230	40	240		ECN3841BAA	ECN3842BAA	ECN3844BAA	ECN3848BAA	AN700NN0218B
	460	75	480		ECN3841CAA	ECN3842CAA	ECN3844CAA	ECN3848CAA	AN700NN0218C
	575	75	600		ECN3841DAA	ECN3842DAA	ECN3844DAA	ECN3848DAA	AN700NN0218D
5	—	—	120	400A	ECN3851AAA	ECN3852AAA	ECN3854AAA	ECN3858AAA	AN700SN0218A
	200	60	208		ECN3851EAA	ECN3852EAA	ECN3854EAA	ECN3858EAA	AN700SN0218E
	230	75	240		ECN3851BAA	ECN3852BAA	ECN3854BAA	ECN3858BAA	AN700SN0218B
	460	150	480		ECN3851CAA	ECN3852CAA	ECN3854CAA	ECN3858CAA	AN700SN0218C
	575	150	600		ECN3851DAA	ECN3852DAA	ECN3854DAA	ECN3858DAA	AN700SN0218D
6	200	100	208	600A	ECN3861EAA	ECN3862EAA	ECN3863EAA ②	ECN3868EAA	AN700TN0218E
	230	150	240		ECN3861BAA	ECN3862BAA	ECN3863BAA ②	ECN3868BAA	AN700TN0218B
	460	300	480		ECN3861CAA	ECN3862CAA	ECN3863CAA ②	ECN3868CAA	AN700TN0218C
	575	300	600		ECN3861DAA	ECN3862DAA	ECN3863DAA ②	ECN3868DAA	AN700TN0218D

Starters do not include heater packs. Select 2 cartons of 3 heater packs (2 overload relays — 1 for each speed). Heater Pack Selection, see **Page 16-6**.

① Maximum horsepower rating of starters for 380V 50 Hz applications:

NEMA Size	0	1	2	3	4	5	6
Horsepower	3	7-1/2	20	40	60	100	200

② Type 4 (Painted steel) Size 6.

③ The Catalog Numbers listed in the Type 4X column are for Type 4X 304-Grade Stainless Steel, as indicated by the seventh digit **4**. Example: ECN3804AAA. To order Type 4X 316-Grade Stainless Steel, change that digit to **9**. To order Type 4 Painted Steel, change that digit to **3**. To order Nonmetallic, change that digit to **5**. For details on these Alternate Enclosures, see **Tab 14**.

Other Magnet Coils ..... **Page 3-20**
Cover Control ..... **Page 3-67**
Dimensions ..... **Page 15-4**
Accessories ..... **Page 16-4**
Modifications ..... **Page 16-40**
Technical Data ..... **Page 18-7**

Table 3-64. Class ECN39 — Combination 2-Speed 2-Winding Starter — Circuit Breaker

NEMA Size	Motor Voltage	Maximum hp Rating		Magnet Coil Voltage ①	Circuit Breaker Type	Type 1 General Purpose	Type 3R Rainproof	Type 4X ⑥ Watertight & Dust-Tight Stainless Steel	Type 12 Dust-Tight Industrial External Reset ②③	Component Starter (Open)
		Constant or Variable Torque	Constant Horsepower			Catalog Number	Catalog Number	Catalog Number	Catalog Number	Catalog Number
0	200	1 3	1 2	208	HMCPE 7A HMCPE 15A	**ECN3901EAC** **ECN3901EAD**	**ECN3902EAC** **ECN3902EAD**	**ECN3904EAC** **ECN3904EAD**	**ECN3908EAC** **ECN3908EAD**	**AN700BN022E**
	230	1 3	1 2	240	HMCPE 7A HMCPE 15A	**ECN3901BAC** **ECN3901BAD**	**ECN3902BAC** **ECN3902BAD**	**ECN3904BAC** **ECN3904BAD**	**ECN3908BAC** **ECN3908BAD**	**AN700BN022B**
	460	3/4 2 5	3/4 2 3	480	HMCPE 3A HMCPE 7A HMCPE 15A	**ECN3901CAB** **ECN3901CAC** **ECN3901CAD**	**ECN3902CAB** **ECN3902CAC** **ECN3902CAD**	**ECN3904CAB** **ECN3904CAC** **ECN3904CAD**	**ECN3908CAB** **ECN3908CAC** **ECN3908CAD**	**AN700BN022C**
	575	1 3 5	1 3 —	600	HMCP 3A HMCP 7A HMCP 15A	**ECN3901DA5** **ECN3901DA6** **ECN3901DA7**	**ECN3902DA5** **ECN3902DA6** **ECN3902DA7**	**ECN3904DA5** **ECN3904DA6** **ECN3904DA7**	**ECN3908DA5** **ECN3908DA6** **ECN3908DA7**	**AN700BN022D**
1	200	1 2 7-1/2	1 2 5	208	HMCPE 7A HMCPE 15A HMCPE 30A	**ECN3911EAC** **ECN3911EAD** **ECN3911EAE**	**ECN3912EAC** **ECN3912EAD** **ECN3912EAE**	**ECN3914EAC** **ECN3914EAD** **ECN3914EAE**	**ECN3918EAC** **ECN3918EAD** **ECN3918EAE**	**AN700DN022E**
	230	1 2 7-1/2	1 2 5	240	HMCPE 7A HMCPE 15A HMCPE 30A	**ECN3911BAC** **ECN3911BAD** **ECN3911BAE**	**ECN3912BAC** **ECN3912BAD** **ECN3912BAE**	**ECN3914BAC** **ECN3914BAD** **ECN3914BAE**	**ECN3918BAC** **ECN3918BAD** **ECN3918BAE**	**AN700DN022B**
	460	3/4 2 5 10	3/4 2 5 7-1/2	480	HMCPE 3A HMCPE 7A HMCPE 15A HMCPE 30A	**ECN3911CAB** **ECN3911CAC** **ECN3911CAD** **ECN3911CAE**	**ECN3912CAB** **ECN3912CAC** **ECN3912CAD** **ECN3912CAE**	**ECN3914CAB** **ECN3914CAC** **ECN3914CAD** **ECN3914CAE**	**ECN3918CAB** **ECN3918CAC** **ECN3918CAD** **ECN3918CAE**	**AN700DN022C**
	575	1 3 7-1/2 10	1 3 7-1/2 —	600	HMCP 3A HMCP 7A HMCP 15A HMCP 30A	**ECN3911DA5** **ECN3911DA6** **ECN3911DA7** **ECN3911DA8**	**ECN3912DA5** **ECN3912DA6** **ECN3912DA7** **ECN3912DA8**	**ECN3914DA5** **ECN3914DA6** **ECN3914DA7** **ECN3914DA8**	**ECN3918DA5** **ECN3918DA6** **ECN3918DA7** **ECN3918DA8**	**AN700DN022D**
2	200 230 460	10 15 25	7-1/2 10 20	208 240 480	HMCPE 50A	**ECN3921EAF** **ECN3921BAF** **ECN3921CAF**	**ECN3922EAF** **ECN3922BAF** **ECN3922CAF**	**ECN3924EAF** **ECN3924BAF** **ECN3924CAF**	**ECN3928EAF** **ECN3928BAF** **ECN3928CAF**	**AN700GN022E** **AN700GN022B** **AN700GN022C**
	575	25	20	600	HMCP 50A	**ECN3921DA9**	**ECN3922DA9**	**ECN3924DA9**	**ECN3928DA9**	**AN700GN022D**
3	200 230 460	25 30 50	20 25 40	208 240 480	HMCPE 100A	**ECN3931EAG** **ECN3931BAG** **ECN3931CAG**	**ECN3932EAG** **ECN3932BAG** **ECN3932CAG**	**ECN3934EAG** **ECN3934BAG** **ECN3934CAG**	**ECN3938EAG** **ECN3938BAG** **ECN3938CAG**	**AN700KN022E** **AN700KN022B** **AN700KN022C**
	575	50	40	600	HMCP 100A	**ECN3931DAI**	**ECN3932DAI**	**ECN3934DAI**	**ECN3938DAI**	**AN700KN022D**
4	200 230 460 575	40 50 100 100	30 40 75 75	208 240 480 600	HMCP 150A	**ECN3941EAH** **ECN3941BAH** **ECN3941CAH** **ECN3941DAH**	**ECN3942EAH** **ECN3942BAH** **ECN3942CAH** **ECN3942DAH**	**ECN3944EAH** **ECN3944BAH** **ECN3944CAH** **ECN3944DAH**	**ECN3948EAH** **ECN3948BAH** **ECN3948CAH** **ECN3948DAH**	**AN700NN022E** **AN700NN022B** **AN700NN022C** **AN700NN022D**
5	200	60 75	60 —	208	HMCP 250A HMCP 400A	**ECN3951EAJ** **ECN3951EAK**	**ECN3952EAJ** **ECN3952EAK**	**ECN3954EAJ** **ECN3954EAK**	**ECN3958EAJ** **ECN3958EAK**	**AN700SN022E**
	230	75 100	75 —	240	HMCP 250A HMCP 400A	**ECN3951BAJ** **ECN3951BAK**	**ECN3952BAJ** **ECN3952BAK**	**ECN3954BAJ** **ECN3954BAK**	**ECN3958BAJ** **ECN3958BAK**	**AN700SN022B**
	460	150 200	150 —	480	HMCP 250A HMCP 400A	**ECN3951CAJ** **ECN3951CAK**	**ECN3952CAJ** **ECN3952CAK**	**ECN3954CAJ** **ECN3954CAK**	**ECN3958CAJ** **ECN3958CAK**	**AN700SN022C**
	575	200	150	600	HMCP 250A	**ECN3951DAJ**	**ECN3952DAJ**	**ECN3954DAJ**	**ECN3958DAJ**	**AN700SN022D**
6	200	150	100	208	⑤	**ECN3961EAU**	**ECN3962EAU**	**ECN3963EAU** ④	**ECN3968EAU**	**AN700TN022E**
	230	200	150	240	⑤	**ECN3961BAU**	**ECN3962BAU**	**ECN3963BAU** ④	**ECN3968BAU**	**AN700TN022B**
	460	400	300	480	⑤	**ECN3961CAU**	**ECN3962CAU**	**ECN3963CAU** ④	**ECN3968CAU**	**AN700TN022C**
	575	400	300	600	⑤	**ECN3961DAU**	**ECN3962DAU**	**ECN3963DAU** ④	**ECN3968DAU**	**AN700TN022D**

Starters do not include heater packs. Select 2 cartons of 3 heater packs (2 overload relays — 1 for each speed). Heater Pack Selection, **Page 16-6**.

① Starters with 120V coil (for separate control) are available. To order, substitute the letter **A** for the 8th character of the listed Catalog Number.
② All Type 12 enclosures are standardized with external reset. For internal reset, order mod code **R5**.
③ Type 12 enclosure is without safety door interlock.
④ Type 4 (Painted steel) Size 6.
⑤ Supply hp, voltage, FLA and whether motor is design E or not when ordering the starter.
⑥ The Catalog Numbers listed in the Type 4X column are for Type 4X 304-Grade Stainless Steel, as indicated by the seventh digit **4**. Example: ECN3904EAC. To order Type 4X 316-Grade Stainless Steel, change that digit to **9**. To order Type 4 Painted Steel, change that digit to **3**. To order Nonmetallic, change that digit to **5**. For details on these Alternate Enclosures, see **Tab 14**.

Other Magnet Coils ..... **Page 3-20**
Cover Control ..... **Page 3-67**
Dimensions ..... **Page 15-4**
Accessories ..... **Page 16-4**
Modifications ..... **Page 16-40**
Technical Data ..... **Page 18-7**

Table 3-65. Class ECN40 — Combination 2-Speed 1-Winding Starter (CT or VT) — Circuit Breaker

NEMA Size	Motor Voltage	Max. hp Rating	Magnet Coil Voltage ①	Circuit Breaker Type	Type 1 General Purpose	Type 3R Rainproof	Type 4X ⑥ Watertight & Dust-Tight Stainless Steel	Type 12 Dust-Tight Industrial External Reset ②③	Component Starter (Open)
					Catalog Number	Catalog Number	Catalog Number	Catalog Number	Catalog Number
0	200	1 3	208	HMCPE 7A HMCPE 15A	**ECN4001EAC** **ECN4001EAD**	**ECN4002EAC** **ECN4002EAD**	**ECN4004EAC** **ECN4004EAD**	**ECN4008EAC** **ECN4008EAD**	**AN700BN0218E**
	230	1 3	240	HMCPE 7A HMCPE 15A	**ECN4001BAC** **ECN4001BAD**	**ECN4002BAC** **ECN4002BAD**	**ECN4004BAC** **ECN4004BAD**	**ECN4008BAC** **ECN4008BAD**	**AN700BN0218B**
	460	3/4 2 5	480	HMCPE 3A HMCPE 7A HMCPE 15A	**ECN4001CAB** **ECN4001CAC** **ECN4001CAD**	**ECN4002CAB** **ECN4002CAC** **ECN4002CAD**	**ECN4004CAB** **ECN4004CAC** **ECN4004CAD**	**ECN4008CAB** **ECN4008CAC** **ECN4008CAD**	**AN700BN0218C**
	575	1 3 5	600	HMCP 3A HMCP 7A HMCP 15A	**ECN4001DA5** **ECN4001DA6** **ECN4001DA7**	**ECN4002DA5** **ECN4002DA6** **ECN4002DA7**	**ECN4004DA5** **ECN4004DA6** **ECN4004DA7**	**ECN4008DA5** **ECN4008DA6** **ECN4008DA7**	**AN700BN0218D**
1	200	1 2 7-1/2	208	HMCPE 7A HMCPE 15A HMCPE 30A	**ECN4011EAC** **ECN4011EAD** **ECN4011EAE**	**ECN4012EAC** **ECN4012EAD** **ECN4012EAE**	**ECN4014EAC** **ECN4014EAD** **ECN4014EAE**	**ECN4018EAC** **ECN4018EAD** **ECN4018EAE**	**AN700DN0218E**
	230	1 2 7-1/2	240	HMCPE 7A HMCPE 15A HMCPE 30A	**ECN4011BAC** **ECN4011BAD** **ECN4011BAE**	**ECN4012BAC** **ECN4012BAD** **ECN4012BAE**	**ECN4014BAC** **ECN4014BAD** **ECN4014BAE**	**ECN4018BAC** **ECN4018BAD** **ECN4018BAE**	**AN700DN0218B**
	460	3/4 2 5 10	480	HMCPE 3A HMCPE 7A HMCPE 15A HMCPE 30A	**ECN4011CAB** **ECN4011CAC** **ECN4011CAD** **ECN4011CAE**	**ECN4012CAB** **ECN4012CAC** **ECN4012CAD** **ECN4012CAE**	**ECN4014CAB** **ECN4014CAC** **ECN4014CAD** **ECN4014CAE**	**ECN4018CAB** **ECN4018CAC** **ECN4018CAD** **ECN4018CAE**	**AN700DN0218C**
	575	1 3 7-1/2 10	600	HMCP 3A HMCP 7A HMCP 15A HMCP 30A	**ECN4011DA5** **ECN4011DA6** **ECN4011DA7** **ECN4011DA8**	**ECN4012DA5** **ECN4012DA6** **ECN4012DA7** **ECN4012DA8**	**ECN4014DA5** **ECN4014DA6** **ECN4014DA7** **ECN4014DA8**	**ECN4018DA5** **ECN4018DA6** **ECN4018DA7** **ECN4018DA8**	**AN700DN0218D**
2	200 230 460	10 15 25	208 240 480	HMCPE 50A	**ECN4021EAF** **ECN4021BAF** **ECN4021CAF**	**ECN4022EAF** **ECN4022BAF** **ECN4022CAF**	**ECN4024EAF** **ECN4024BAF** **ECN4024CAF**	**ECN4028EAF** **ECN4028BAF** **ECN4028CAF**	**AN700GN0218E** **AN700GN0218B** **AN700GN0218C**
	575	25	600	HMCP 50A	**ECN4021DA9**	**ECN4022DA9**	**ECN4024DA9**	**ECN4028DA9**	**AN700GN0218D**
3	200 230 460	25 30 50	208 240 480	HMCPE 100A	**ECN4031EAG** **ECN4031BAG** **ECN4031CAG**	**ECN4032EAG** **ECN4032BAG** **ECN4032CAG**	**ECN4034EAG** **ECN4034BAG** **ECN4034CAG**	**ECN4038EAG** **ECN4038BAG** **ECN4038CAG**	**AN700KN0218E** **AN700KN0218B** **AN700KN0218C**
	575	50	600	HMCP 100A	**ECN4031DAI**	**ECN4032DAI**	**ECN4034DAI**	**ECN4038DAI**	**AN700KN0218D**
4	200 230 460 575	40 50 100 100	208 240 480 600	HMCP 150A	**ECN4041EAH** **ECN4041BAH** **ECN4041CAH** **ECN4041DAH**	**ECN4042EAH** **ECN4042BAH** **ECN4042CAH** **ECN4042DAH**	**ECN4044EAH** **ECN4044BAH** **ECN4044CAH** **ECN4044DAH**	**ECN4048EAH** **ECN4048BAH** **ECN4048CAH** **ECN4048DAH**	**AN700NN0218E** **AN700NN0218B** **AN700NN0218C** **AN700NN0218D**
5	200	60 75	208	HMCP 250A HMCP 400A	**ECN4051EAJ** **ECN4051EAK**	**ECN4052EAJ** **ECN4052EAK**	**ECN4054EAJ** **ECN4054EAK**	**ECN4058EAJ** **ECN4058EAK**	**AN700SN0218E**
	230	75 100	240	HMCP 250A HMCP 400A	**ECN4051BAJ** **ECN4051BAK**	**ECN4052BAJ** **ECN4052BAK**	**ECN4054BAJ** **ECN4054BAK**	**ECN4058BAJ** **ECN4058BAK**	**AN700SN0218B**
	460	150 200	480	HMCP 250A HMCP 400A	**ECN4051CAJ** **ECN4051CAK**	**ECN4052CAJ** **ECN4052CAK**	**ECN4054CAJ** **ECN4054CAK**	**ECN4058CAJ** **ECN4058CAK**	**AN700SN0218C**
	575	200	600	HMCP 250A	**ECN4051DAJ**	**ECN4052DAJ**	**ECN4054DAJ**	**ECN4058DAJ**	**AN700SN0218D**
6	200	150	208	⑤	**ECN4061EAU**	**ECN4062EAU**	**ECN4063EAU** ④	**ECN4068EAU**	**AN700TN0218E**
	230	200	240	⑤	**ECN4061BAU**	**ECN4062BAU**	**ECN4063BAU** ④	**ECN4068BAU**	**AN700TN0218B**
	460	400	480	⑤	**ECN4061CAU**	**ECN4062CAU**	**ECN4063CAU** ④	**ECN4068CAU**	**AN700TN0218C**
	575	400	600	⑤	**ECN4061DAU**	**ECN4062DAU**	**ECN4063DAU** ④	**ECN4068DAU**	**AN700TN0218D**

Starters do not include heater packs. Select 2 cartons of 3 heater packs (2 overload relays – 1 for each speed). Heater Pack Selection, see **Page 16-6**.

① Starters with 120V coil (for separate control) are available. To order, substitute the letter **A** for the 8th character of the listed Catalog Number.
② All Type 12 enclosures are standardized with external reset. For internal reset, order mod code **R5**.
③ Type 12 enclosure is without safety door interlock.
④ Type 4 (Painted steel) Size 6.
⑤ Supply hp, voltage, FLA and whether motor is design E or not when ordering the starter.
⑥ The Catalog Numbers listed in the Type 4X column are for Type 4X 304-Grade Stainless Steel, as indicated by the seventh digit **4**. Example: ECN4004EAC. To order Type 4X 316-Grade Stainless Steel, change that digit to **9**. To order Type 4 Painted Steel, change that digit to **3**. To order Nonmetallic, change that digit to **5**. For details on these Alternate Enclosures, see **Tab 14**.

Other Magnet Coils ..... **Page 3-20**
Cover Control ..... **Page 3-67**
Dimensions ..... **Page 15-4**
Accessories ..... **Page 16-4**
Modifications ..... **Page 16-40**
Technical Data ..... **Page 18-7**

Table 3-66. Class ECN41 — Combination 2-Speed 1-Winding Starter (Constant Horsepower) — Circuit Breaker

NEMA Size	Motor Voltage	Maximum hp Rating	Magnet Coil Voltage ①	Circuit Breaker Type	Type 1 General Purpose	Type 3R Rainproof	Type 4X ⑥ Watertight & Dust-Tight Stainless Steel	Type 12 Dust-Tight Industrial External Reset ②③	Component Starter (Open)
		Constant Horsepower			Catalog Number	Catalog Number	Catalog Number	Catalog Number	Catalog Number
0	200	1 2	208	HMCPE 7A HMCPE 15A	**ECN4101EAC** **ECN4101EAD**	**ECN4102EAC** **ECN4102EAD**	**ECN4104EAC** **ECN4104EAD**	**ECN4108EAC** **ECN4108EAD**	**AN700BN0218E**
	230	1 2	240	HMCPE 7A HMCPE 15A	**ECN4101BAC** **ECN4101BAD**	**ECN4102BAC** **ECN4102BAD**	**ECN4104BAC** **ECN4104BAD**	**ECN4108BAC** **ECN4108BAD**	**AN700BN0218B**
	460	3/4 2 3	480	HMCPE 3A HMCPE 7A HMCPE 15A	**ECN4101CAB** **ECN4101CAC** **ECN4101CAD**	**ECN4102CAB** **ECN4102CAC** **ECN4102CAD**	**ECN4104CAB** **ECN4104CAC** **ECN4104CAD**	**ECN4108CAB** **ECN4108CAC** **ECN4108CAD**	**AN700BN0218C**
	575	1 3	600	HMCP 3A HMCP 7A	**ECN4101DA5** **ECN4101DA6**	**ECN4102DA5** **ECN4102DA6**	**ECN4104DA5** **ECN4104DA6**	**ECN4108DA5** **ECN4108DA6**	**AN700BN0218D**
1	200	1 2 5	208	HMCPE 7A HMCPE 5A HMCPE 30A	**ECN4111EAC** **ECN4111EAD** **ECN4111EAE**	**ECN4112EAC** **ECN4112EAD** **ECN4112EAE**	**ECN4114EAC** **ECN4114EAD** **ECN4114EAE**	**ECN4118EAC** **ECN4118EAD** **ECN4118EAE**	**AN700DN0218E**
	230	1 2 5	240	HMCPE 7A HMCPE 15A HMCPE 30A	**ECN4111BAC** **ECN4111BAD** **ECN4111BAE**	**ECN4112BAC** **ECN4112BAD** **ECN4112BAE**	**ECN4114BAC** **ECN4114BAD** **ECN4114BAE**	**ECN4118BAC** **ECN4118BAD** **ECN4118BAE**	**AN700DN0218B**
	460	3/4 2 5 7-1/2	480	HMCPE 3A HMCPE 7A HMCPE 15A HMCPE 30A	**ECN4111CAB** **ECN4111CAC** **ECN4111CAD** **ECN4111CAE**	**ECN4112CAB** **ECN4112CAC** **ECN4112CAD** **ECN4112CAE**	**ECN4114CAB** **ECN4114CAC** **ECN4114CAD** **ECN4114CAE**	**ECN4118CAB** **ECN4118CAC** **ECN4118CAD** **ECN4118CAE**	**AN700DN0218C**
	575	1 3 7-1/2	600	HMCP 3A HMCP 7A HMCP 15A	**ECN4111DA5** **ECN4111DA6** **ECN4111DA7**	**ECN4112DA5** **ECN4112DA6** **ECN4112DA7**	**ECN4114DA5** **ECN4114DA6** **ECN4114DA7**	**ECN4118DA5** **ECN4118DA6** **ECN4118DA7**	**AN700DN0218D**
2	200 230 460	7-1/2 10 20	208 240 480	HMCPE 50A	**ECN4121EAF** **ECN4121BAF** **ECN4121CAF**	**ECN4122EAF** **ECN4122BAF** **ECN4122CAF**	**ECN4124EAF** **ECN4124BAF** **ECN4124CAF**	**ECN4128EAF** **ECN4128BAF** **ECN4128CAF**	**AN700GN0218E** **AN700GN0218B** **AN700GN0218C**
	575	20	600	HMCP 50A	**ECN4121DA9**	**ECN4122DA9**	**ECN4124DA9**	**ECN4128DA9**	**AN700GN0218D**
3	200 230 460	20 25 40	208 240 480	HMCPE 100A	**ECN4131EAG** **ECN4131BAG** **ECN4131CAG**	**ECN4132EAG** **ECN4132BAG** **ECN4132CAG**	**ECN4134EAG** **ECN4134BAG** **ECN4134CAG**	**ECN4138EAG** **ECN4138BAG** **ECN4138CAG**	**AN700KN0218E** **AN700KN0218B** **AN700KN0218C**
	575	40	600	HMCP 100A	**ECN4131DAI**	**ECN4132DAI**	**ECN4134DAI**	**ECN4138DAI**	**AN700KN0218D**
4	200 230 460 575	30 40 75 75	208 240 480 600	HMCP 150A	**ECN4141EAH** **ECN4141BAH** **ECN4141CAH** **ECN4141DAH**	**ECN4142EAH** **ECN4142BAH** **ECN4142CAH** **ECN4142DAH**	**ECN4144EAH** **ECN4144BAH** **ECN4144CAH** **ECN4144DAH**	**ECN4148EAH** **ECN4148BAH** **ECN4148CAH** **ECN4148DAH**	**AN700NN0218E** **AN700NN0218B** **AN700NN0218C** **AN700NN0218D**
5	200	60	208	HMCP 250A	**ECN4151EAJ**	**ECN4152EAJ**	**ECN4154EAJ**	**ECN4158EAJ**	**AN700SN0218E**
	230	75	240	HMCP 250A	**ECN4151BAJ**	**ECN4152BAJ**	**ECN4154BAJ**	**ECN4158BAJ**	**AN700SN0218B**
	460	150	480	HMCP 250A	**ECN4151CAJ**	**ECN4152CAJ**	**ECN4154CAJ**	**ECN4158CAJ**	**AN700SN0218C**
	575	150	600	HMCP 250A	**ECN4151DAJ**	**ECN4152DAJ**	**ECN4154DAJ**	**ECN4158DAJ**	**AN700SN0218D**
6	200	100	208	⑤	**ECN4161EAU**	**ECN4162EAU**	**ECN4163EAU** ④	**ECN4168EAU**	**AN700TN0218E**
	230	150	240	⑤	**ECN4161BAU**	**ECN4162BAU**	**ECN4163BAU** ④	**ECN4168BAU**	**AN700TN0218B**
	460	300	480	⑤	**ECN4161CAU**	**ECN4162CAU**	**ECN4163CAU** ④	**ECN4168CAU**	**AN700TN0218C**
	575	300	600	⑤	**ECN4161DAU**	**ECN4162DAU**	**ECN4163DAU** ④	**ECN4168DAU**	**AN700TN0218D**

Starters do not include heater packs. Select 2 cartons of 3 heater packs (2 overload relays — 1 for each speed). Heater Pack Selection, **Page 16-6**.

① Starters with 120V coil (for separate control) are available. To order, substitute the letter **A** for the 8th character of the listed Catalog Number.

② All Type 12 enclosures are standardized with external reset. For internal reset, order mod code **R5**.

③ Type 12 enclosure is without safety door interlock.

④ Type 4 (Painted steel) Size 6.

⑤ Supply hp, voltage, FLA and whether motor is design E or not when ordering the starter.

⑥ The Catalog Numbers listed in the Type 4X column are for Type 4X 304-Grade Stainless Steel, as indicated by the seventh digit **4**. Example: ECN4104EAC. To order Type 4X 316-Grade Stainless Steel, change that digit to **9**. To order Type 4 Painted Steel, change that digit to **3**. To order Nonmetallic, change that digit to **5**. For details on these Alternate Enclosures, see **Tab 14**.

Other Magnet Coils ..... **Page 3-20**
Cover Control ..... **Page 3-67**
Dimensions ..... **Page 15-4**
Accessories ..... **Page 16-4**
Modifications ..... **Page 16-40**
Technical Data ..... **Page 18-7**

Wiring Diagrams

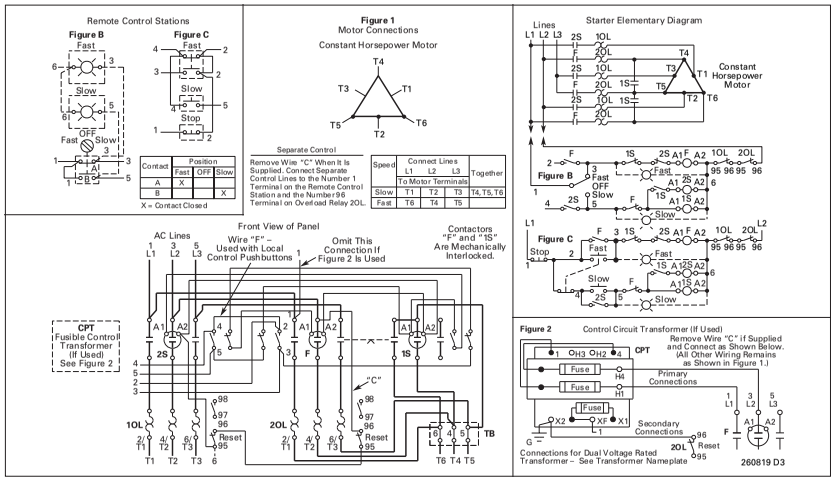

Figure 3-14. Multispeed — 2-Speed 1-Winding Constant Horsepower

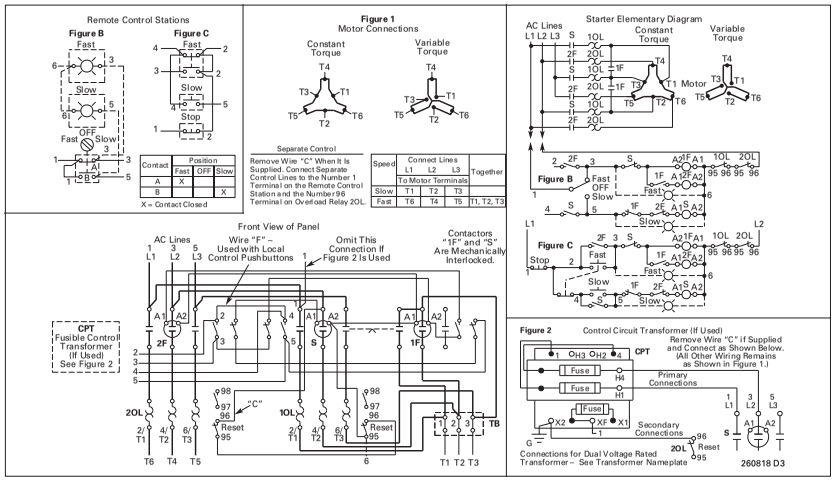

Figure 3-15. Multispeed — 2-Speed 1-Winding Constant or Variable Torque

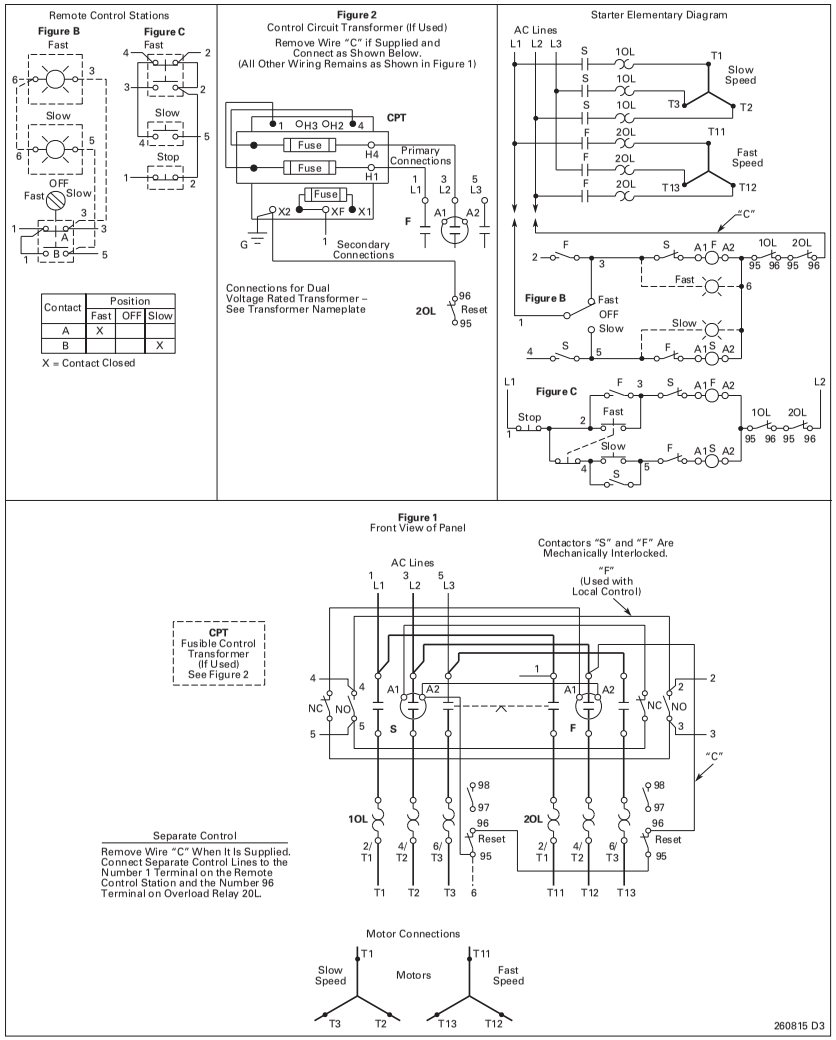

Figure 3-16. Multispeed — 2-Speed 2-Winding

Multispeed Cover Control

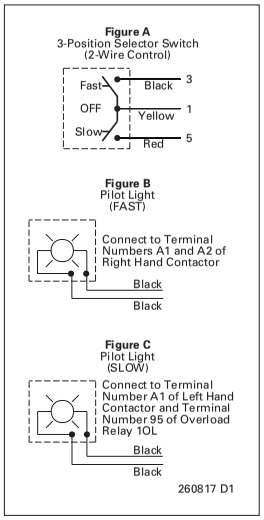

Figure 3-17. 2-Speed 2-Winding C400GK Control Options

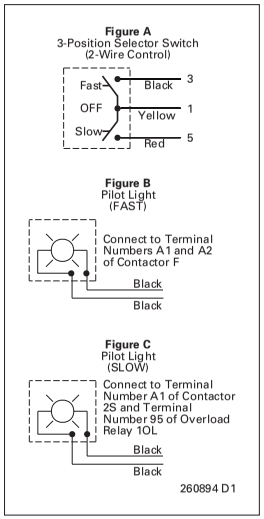

Figure 3-18. 2-Speed 1-Winding CH C400GK Control Options

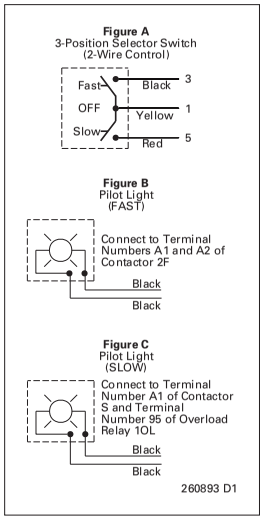

Figure 3-19. 2-Speed 1-Winding CT, VT C400GK Control Options

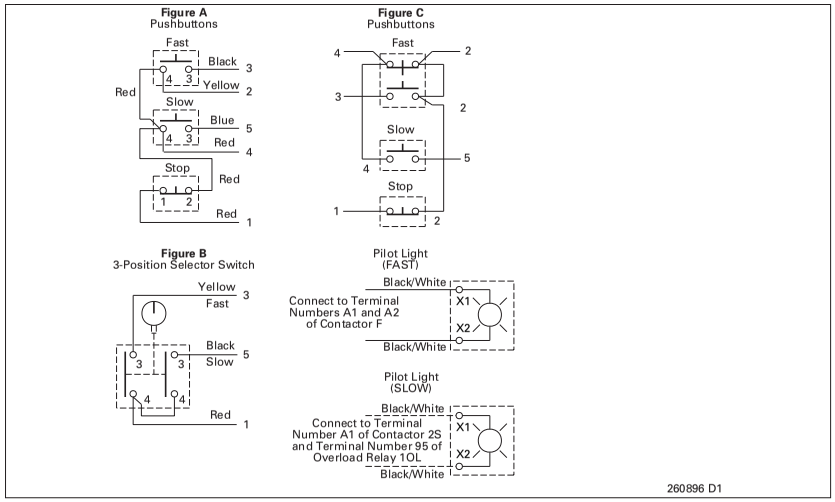

Figure 3-20. 2-Speed 1-Winding CH C400T Control Options

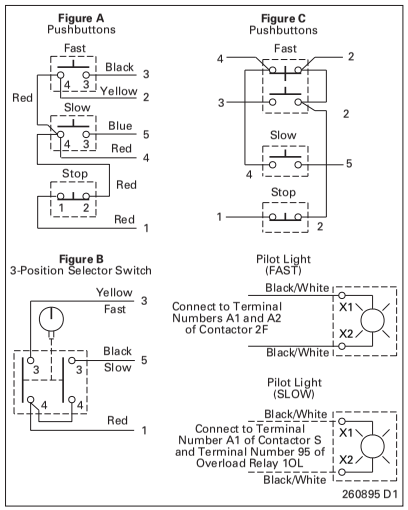

Figure 3-21. 2-Speed 1-Winding CT, VT C400T Control Options

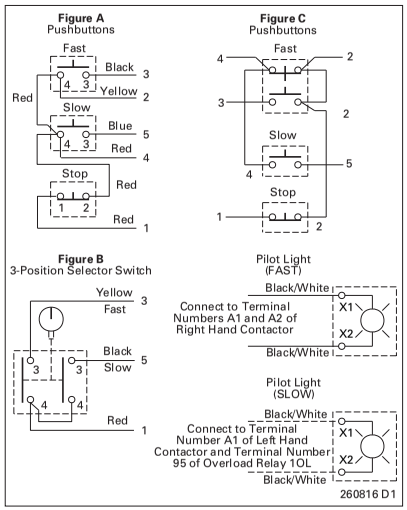

Figure 3-22. 2-Speed 2-Winding C400T Control Options

IEC Contactors & Starters

Contents

Description	*Page*
***XT* IEC Power Control**	
Contactors and Starters	**4-2**
Product Description	**4-2**
Catalog Number Selection	**4-3**
Cover Control	**4-4**
Product Selection	**4-6**
Wiring Diagrams	**4-20**
Combination Motor Controllers	**4-23**
Product Description	**4-23**
Catalog Number Selection	**4-24**
Cover Control	**4-25**
Product Selection	**4-27**

IEC Starters

ECX Enclosed Control

Product Description

Eaton's Cutler-Hammer® ***XT*** Line includes IEC Contactors, Starters and Combination Motor Controllers (CMCs). Designed to meet International Standards, the Enclosed Control ***XT*** Line (ECX), carries UL and cUL certifications.

Features and Benefits

- AC control from 12V to 600V 50/60 Hz
- DC control from 12V to 220V
- Available with screw or spring cage terminals
- Reversing or non-reversing contactors and starters
- AC-3 contactor ratings to 1000A and AC-1 contactor ratings to 2000A
- Non-reversing starters to 650A
- Panel or DIN rail mounting to 65A
- IP20 finger and back-of-hand proof
- Large ambient temperature range, -25 to 50°C [-13 to 122°F]
- AC and DC controlled contactors in the same compact frame
- Low power consumption DC coils
- Built-in NO or NC auxiliary contacts to 32A
- Plug-in accessories for reduced installation time
- Nonmetallic and metallic enclosures in Types 1 (IP23), 4 (IP66), 4X (IP66), 12 (IP65) and 3R (IP32)
- Circuit breakers, fused, non-fused and non-combination designs available
- Opaque (standard) or clear covers available on nonmetallic Halyester enclosure option

Short Circuit Ratings

- Fused, Non-fused
  - 10K AIC @ 600V
- HMCP
  - 0 – 10 hp 15K AIC @ 600V
  - 15 – 125 hp 25K AIC @ 600V
- Non-combination
  - 0 – 1 hp 1K AIC @ 600V
  - 1.5 – 50 hp 5K AIC @ 600V
  - 50 – 200 hp 10K AIC @ 600V

Standards and Certifications

Note: See **Page 18-2** for additional information on Standards and Certifications that apply to all Cutler-Hammer Enclosed Control products.

- Fusible — with Class J fuses
  - UL Listed
  - cUL Listed ①
- Circuit Breaker HMCP/E
  - UL Listed
  - cUL Listed ①

① cUL Listing indicates appropriate CSA standard investigation.

Catalog Number Selection

Table 4-1. IEC *XT* Line Enclosed Control Catalog Numbering System

E C X 25 E 5 A A A - _ _

Design

X =	*XT* IEC

Modification Codes

See **Page 16-40**

Overload Range

See **Table 4-2**

Class	Table
09 = Non-combination Non-reversing Starter	**4-6**
10 = Non-combination Reversing Starter	**4-7**
11 = Non-combination Non-reversing Starter with CPT	**4-8**
19 = Combination Non-reversing Starter — Fusible/Non-fusible Disconnect	**4-9**
20 = Combination Reversing Starter — Fusible/Non-fusible Disconnect	**4-10**
25 = Combination Non-reversing Starter — Circuit Breaker	**4-11**
26 = Combination Reversing Starter — Circuit Breaker	**4-12**

Disconnect Fuse Clip Ratings

A =	None
C =	30A J
E =	60A J
G =	100A J

HMCP Ratings

A =	None
B =	3A
C =	7A
D =	15A
E =	30A
F =	50A
W =	70A
G =	100A
H =	150A
J =	250A

Frame Size

Combination (Class 16 – 74)	Non-combination (Class 09 – 11) Ampere Rating (UL 600V)	
IEC Size **B – Q**	**B** = 7A	**J** = 40A
	C = 9A	**K** = 50A
	D = 12A	**L** = 65A
	E = 15A	**M** = 80A
	F = 18A	**N** = 95A
	G = 25A	**P** = 115A
	H = 32A	**Q** = 150A

Cover Control

Type 1 Non-comb. Starters see **Table 4-3**
All Other Starters see **Table 4-4**
E22 Style Comb. Starters see **Table 4-5**

Enclosure Type/IP Ratings ①

1 =	Type 1— General Purpose/IP23
3 =	Type 4 — Painted Steel/IP66
4 =	Type 4X — Watertight (304-Grade Stainless Steel)/IP66
5 =	Type 4X — Watertight (Non-metallic)/IP66
8 =	Type 12 — Dust-Tight/IP65

Coil Voltage

A =	120V	**H** =	277V
B =	240V	**L** =	380V/50 Hz
C =	480V	**Q** =	24V DC
D =	600V	**T** =	24V AC
E =	208V		

① See **Table 1-2** on **Page 1-4** for Enclosure Type/IP Rating Cross-Reference.

Table 4-2. XTOB Overload Relays for Enclosed XT

FLA Ratings	Size B – E 7 – 15A	Size F – H 18 – 32A	Size J – L 40 – 65A	Size M – N 80 – 95A	Size P – Q 115 – 150A
0.1 – 0.16	**A**	**A**	—	—	—
0.16 – 0.24	**B**	**B**	—	—	—
0.24 – 0.4	**C**	**C**	—	—	—
0.4 – 0.6	**D**	**D**	—	—	—
0.6 – 1	**E**	**E**	—	—	—
1 – 1.6	**F**	**F**	—	—	—
1.6 – 2.4	**G**	**G**	—	—	—
2.4 – 4	**H**	**H**	—	—	—
4 – 6	**I**	**I**	—	—	—
6 – 10	**J**	**J**	**J**	—	—
9 – 12	**K**	—	—	—	—
12 – 16	**L** ②	**L**	**L**	—	—

FLA Ratings	Size B – E 7 – 15A	Size F – H 18 – 32A	Size J – L 40 – 65A	Size M – N 80 – 95A	Size P – Q 115 – 150A
16 – 24	—	**M**	**M**	—	—
24 – 32	—	**N**	—	—	—
24 – 40	—	—	**P**	—	—
25 – 35	—	—	—	**S**	**S**
35 – 50	—	—	—	**T**	**T**
40 – 57	—	—	**Q**	—	—
50 – 65	—	—	**R**	—	—
50 – 70	—	—	—	**U**	**U**
70 – 100	—	—	—	**V**	**V**
95 – 125	—	—	—	—	**W**

② Size B – E is 10 – 16A.

Cover Control

Non-combination Starters

Control Power Transformer (CPT) may be required.

Combination Starters

- Cover control for Combination Starters uses 10250T style devices as standard.
- E22 style cover control options are available (**Table 4-5**).
- Selector switches are maintained with lever operators.
- Pushbuttons are momentary type with extended pushbutton.
- The kit includes hardware and connecting wires (where possible).
- For factory installed control devices other than shown below, refer to Modification Codes, **Page 16-40**.

Type 1 Cover Control

Table 4-3. Type 1 Non-combination Cover Control

Description	Factory Installed Flange Control ① Position 9 Code	Field Installation Kits Catalog Number
Non-reversing		
No Cover Mounted Pilot Devices	**A**	**C400GK0**
START/STOP Pushbuttons	**B**	**C400GK1**
with Red RUN Pilot Light	**C**	**C400GK12** ②
with Red RUN/Green OFF Lights	**D**	**C400GK16** ②
HAND/OFF/AUTO Selector Switch	**H**	**C400GK3**
with Red RUN Pilot Light	**J**	**C400GK32** ②
with Red RUN/Green OFF Lights	**K**	**C400GK36** ②
Red RUN Pilot Light	**P**	**C400GK42** ②
Green OFF	**Q**	**C400GK41** ②
Red RUN/Green OFF Pilot Lights	**R**	**C400GK46** ②
Reversing		
No Cover Mounted Pilot Devices	**A**	**C400GK0**
FOR/REV/STOP Pushbuttons	**B**	**C400GR1**
with 2 Red Pilot Lights	**C**	**C400GR14** ②
UP/STOP/DOWN Pushbuttons	**E**	**C400GR2**
with 2 Red Pilot Lights	**F**	**C400GR24** ②
Two Red Pilot Lights	**P**	**C400GK44** ②
One Green Pilot Light	**Q**	**C400GK41** ②

① For more available factory installed flange control, see **Table 4-4**.
② Add Code Letter from the table below to Catalog Number for voltage — Kits only. Example: C400T9**B**.

Rating	Code Letter	Rating	Code Letter	Rating	Code Letter
120V 60 Hz	**A**	277V 60 Hz	**H**	480V 60 Hz	**C**
208V 60 Hz	**E**	380V 50 Hz	**L**	600V 60 Hz	**D**
240V 60 Hz	**B**				

10250T Selector Switch

Table 4-4. Type 1 Combination and All Type 3R, 4X and 12 Cover Control ③

Description	Factory Installed Flange Control Position 9 Code	Field Installation Kits Catalog Number
Non-reversing		
No Cover Mounted Pilot Devices	**A**	—
START/STOP Pushbuttons	**B**	**C400T1**
with Red RUN Pilot Light	**C**	—
with Red RUN/Green OFF Lights	**D**	—
ON/OFF Pushbuttons	**E**	**C400T2**
with Red RUN Pilot Light	**F**	—
with Red RUN/Green OFF Lights	**G**	—
HAND/OFF/AUTO Selector Switch	**H**	**C400T12**
with Red RUN Pilot Light	**J**	—
with Red RUN/Green OFF Lights	**K**	—
START Pushbutton	**L**	**C400T3**
ON Pushbutton	**M**	**C400T4**
OFF Pushbutton	**N**	**C400T5**
Red RUN Pilot Light	**P**	**C400T9** ④
Green OFF	**Q**	**C400T10** ④
Red RUN/Green OFF Pilot Lights	**R**	**C400T11** ④
START/STOP Selector Switch	**S**	**C400T13**
with Red RUN Pilot Light	**T**	—
with Red RUN/Green OFF Lights	**U**	—
ON/OFF Selector Switch	**V**	**C400T14**
with Red RUN Pilot Light	**W**	—
with Red RUN/Green OFF Lights	**X**	—
Reversing		
No Cover Mounted Pilot Devices	**A**	—
FOR/REV/STOP Pushbuttons	**B**	**C400T6**
with 2 Red Pilot Lights	**C**	—
with 2 Red/1 Green Pilot Lights	**D**	—
UP/STOP/DOWN Pushbuttons	**E**	—
with 2 Red Pilot Lights	**F**	—
FOR/OFF/REV Selector Switch	**H**	**C400T15**
with 2 Red Pilot Lights	**J**	—
with 2 Red/1 Green Pilot Lights	**K**	—
Two Red Pilot Lights	**P**	⑤
One Green Pilot Light	**Q**	**C400T10** ④
Two Red/One Green Pilot Lights	**R**	—
OPEN/OFF/CLOSE Selector Switch	**V**	**C400T16**
with 2 Red Pilot Lights	**W**	—
with 2 Red/1 Green Pilot Lights	**X**	—

③ For Type 1 Non-combination field installation kits, see **Table 4-3**.
④ Add Code Letter from the table below to Catalog Number for voltage — Kits only. Example: C400T9**B**.

Rating	Code Letter	Rating	Code Letter	Rating	Code Letter
120V 60 Hz	**A**	277V 60 Hz	**H**	480V 60 Hz	**C**
208V 60 Hz	**E**	380V 50 Hz	**L**	600V 60 Hz	**D**
240V 60 Hz	**B**				

⑤ Order Quantity (2) of **C400T10**.

E22 Selector Switch

Table 4-5. Type 1, 3R, 4X and 12 E22 Style Combination Starter Cover Control

Description	Factory Installed ①	Field Installation Kits
	Position 9 Cover Control Code	Combination Only Catalog Number
Non-reversing		
No Cover Mounted Pilot Devices	A	—
START/STOP Pushbuttons (PB)	B	CE400T01
START/STOP PB & Red RUN Light	C	CE400T02 ②
START/STOP PB, Red RUN, & Green STOPPED Light	D	CE400T03 ②
HAND/OFF/AUTO Selector Switch (SS)	H	CE400T04
H-O-A SS & Red RUN Light	J	CE400T05 ②
H-O-A SS, Red RUN, & Green STOPPED Light	K	CE400T06 ②
Red RUN Pilot Light	P	CE400T10 ②
Green Off Pilot Light	Q	CE400T11 ②
Red RUN/Green OFF Pilot Light	R	CE400T12 ②
ON/OFF Selector Switch (SS)	S	CE400T07
ON/OFF SS, Red RUN Light	T	CE400T08 ②
ON/OFF SS, Red RUN, & Green STOPPED Light	U	CE400T09 ②
Reversing		
No Cover Mounted Pilot Devices	A	—
FWD/REV/STOP Pushbuttons (PB)	B	CE400T50
FWD/REV/STOP PB + Red FWD & REV Lights	C	CE400T51 ②
FWD/REV/STOP PB, Red FWD/REV, & Green STOPPED	D	CE400T52 ②
FOR/OFF/REV Selector Switch (SS)	H	CE400T53
FOR/OFF/REV SS + Red FWD & REV Lights	J	CE400T54 ②
FOR/OFF/REV SS, Red FWD/REV, & Green STOPPED	K	CE400T55 ②
OPEN/OFF/CLOSE Selector Switch (SS)	V	CE400T56
OPEN/OFF/CLOSE SS + Red FWD & REV Lights	W	CE400T57 ②
OPEN/OFF/CLOSE SS, Red FWD/REV, & Green STOPPED	X	CE400T58 ②

① To include any of the above cover controls, place the control code character in position 9 of Catalog Number and add Mod Code **C29**.
Example: EXE19B4A**D**A_-**C29**.
Full voltage non-reversing fusible starter with START/STOP pushbutton with red RUN and green OFF pilot lights.

② Suffix for lights (required for field installed kits only) in the table below:

Rating	Code Letter	Rating	Code Letter	Rating	Code Letter
120V 60 Hz	A	277V 60 Hz	H	480V 60 Hz	C
208V 60 Hz	E	380V 50 Hz	L	600V 60 Hz	D
240V 60 Hz	B				

Product Selection

Table 4-6. Class ECX09 — Non-combination Non-reversing Starter

Amps	Maximum hp ①			Coil Voltage @ 60 Hz ②	Type 1/IP23	Type 4X/IP66 ④	Type 12/IP65	Component
	Motor Voltage ⑤	1-Phase	3-Phase		Catalog Number ③	Catalog Number ③	Catalog Number ③	Catalog Number ③
Frame B								
7	115	1/4	—	120	ECX09B1AAA-_	ECX09B4AAA-_	ECX09B8AAA-_	XTAE007B10A_
	208	3/4	1-1/2	208	ECX09B1EAA-_	ECX09B4EAA-_	ECX09B8EAA-_	XTAE007B10E_
	230	1	2	240	ECX09B1BAA-_	ECX09B4BAA-_	ECX09B8BAA-_	XTAE007B10B_
	380	—	3	380/50 Hz	ECX09B1LAA-_	ECX09B4LAA-_	ECX09B8LAA-_	XTAE007B10L_
	460	—	3	480	ECX09B1CAA-_	ECX09B4CAA-_	ECX09B8CAA-_	XTAE007B10C_
	575	—	5	600	ECX09B1DAA-_	ECX09B4DAA-_	ECX09B8DAA-_	XTAE007B10D_
Frame C								
9	115	1/2	—	120	ECX09C1AAA-_	ECX09C4AAA-_	ECX09C8AAA-_	XTAE009B10A_
	208	1	2	208	ECX09C1EAA-_	ECX09C4EAA-_	ECX09C8EAA-_	XTAE009B10E_
	230	1-1/2	3	240	ECX09C1BAA-_	ECX09C4BAA-_	ECX09C8BAA-_	XTAE009B10B_
	380	—	5	380/50 Hz	ECX09C1LAA-_	ECX09C4LAA-_	ECX09C8LAA-_	XTAE009B10L_
	460	—	5	480	ECX09C1CAA-_	ECX09C4CAA-_	ECX09C8CAA-_	XTAE009B10C_
	575	—	7-1/2	600	ECX09C1DAA-_	ECX09C4DAA-_	ECX09C8DAA-_	XTAE009B10D_
Frame D								
12	115	1/2	—	120	ECX09D1AAA-_	ECX09D4AAA-_	ECX09D8AAA-_	XTAE012B10A_
	208	1-1/2	3	208	ECX09D1EAA-_	ECX09D4EAA-_	ECX09D8EAA-_	XTAE012B10E_
	230	2	3	240	ECX09D1BAA-_	ECX09D4BAA-_	ECX09D8BAA-_	XTAE012B10B_
	380	—	5	380/50 Hz	ECX09D1LAA-_	ECX09D4LAA-_	ECX09D8LAA-_	XTAE012B10L_
	460	—	7-1/2	480	ECX09D1CAA-_	ECX09D4CAA-_	ECX09D8CAA-_	XTAE012B10C_
	575	—	10	600	ECX09D1DAA-_	ECX09D4DAA-_	ECX09D8DAA-_	XTAE012B10D_
Frame E								
15	115	3/4	—	120	ECX09E1AAA-_	ECX09E4AAA-_	ECX09E8AAA-_	XTAE015B10A_
	208	2	3	208	ECX09E1EAA-_	ECX09E4EAA-_	ECX09E8EAA-_	XTAE015B10E_
	230	2	3	240	ECX09E1BAA-_	ECX09E4BAA-_	ECX09E8BAA-_	XTAE015B10B_
	380	—	5	380/50 Hz	ECX09E1LAA-_	ECX09E4LAA-_	ECX09E8LAA-_	XTAE015B10L_
	460	—	7-1/2	480	ECX09E1CAA-_	ECX09E4CAA-_	ECX09E8CAA-_	XTAE015B10C_
	575	—	10	600	ECX09E1DAA-_	ECX09E4DAA-_	ECX09E8DAA-_	XTAE015B10D_
Frame F								
18	115	2	—	120	ECX09F1AAA-_	ECX09F4AAA-_	ECX09F8AAA-_	XTAE018C10A_
	208	2	5	208	ECX09F1EAA-_	ECX09F4EAA-_	ECX09F8EAA-_	XTAE018C10E_
	230	3	5	240	ECX09F1BAA-_	ECX09F4BAA-_	ECX09F8BAA-_	XTAE018C10B_
	380	—	7-1/2	380/50 Hz	ECX09F1LAA-_	ECX09F4LAA-_	ECX09F8LAA-_	XTAE018C10L_
	460	—	10	480	ECX09F1CAA-_	ECX09F4CAA-_	ECX09F8CAA-_	XTAE018C10C_
	575	—	15	600	ECX09F1DAA-_	ECX09F4DAA-_	ECX09F8DAA-_	XTAE018C10D_
Frame G								
25	115	2	—	120	ECX09G1AAA-_	ECX09G4AAA-_	ECX09G8AAA-_	XTAE025C10A_
	208	3	7-1/2	208	ECX09G1EAA-_	ECX09G4EAA-_	ECX09G8EAA-_	XTAE025C10E_
	230	5	7-1/2	240	ECX09G1BAA-_	ECX09G4BAA-_	ECX09G8BAA-_	XTAE025C10B_
	380	—	10	380/50 Hz	ECX09G1LAA-_	ECX09G4LAA-_	ECX09G8LAA-_	XTAE025C10L_
	460	—	15	480	ECX09G1CAA-_	ECX09G4CAA-_	ECX09G8CAA-_	XTAE025C10C_
	575	—	10	600	ECX09G1DAA-_	ECX09G4DAA-_	ECX09G8DAA-_	XTAE025C10D_
Frame H								
32	115	3	—	120	ECX09H1AAA-_	ECX09H4AAA-_	ECX09H8AAA-_	XTAE032C10A_
	208	5	10	208	ECX09H1EAA-_	ECX09H4EAA-_	ECX09H8EAA-_	XTAE032C10E_
	230	5	10	240	ECX09H1BAA-_	ECX09H4BAA-_	ECX09H8BAA-_	XTAE032C10B_
	380	—	15	380/50 Hz	ECX09H1LAA-_	ECX09H4LAA-_	ECX09H8LAA-_	XTAE032C10L_
	460	—	20	480	ECX09H1CAA-_	ECX09H4CAA-_	ECX09H8CAA-_	XTAE032C10C_
	575	—	25	600	ECX09H1DAA-_	ECX09H4DAA-_	ECX09H8DAA-_	XTAE032C10D_

① 1 hp = 0.746 kW.
② Voltage is listed @ 60 Hz unless otherwise noted. Other voltages available upon request.
③ Select proper "XTOB" Overload Amperage range as per motor FLA, see **Table 4-2**.
④ These are the Catalog Numbers for Type 4X 304-Grade Stainless Steel, as indicated by the seventh digit **4**. Example: ECX09B**4**AAA-_. To order Type 4X 316-Grade Stainless Steel, change that digit to **9**. To order Type 4 Painted Steel, change that digit to **3**. To order Nonmetallic, change that digit to **5**. For details on these Alternate Enclosures, see **Tab 14**.
⑤ Contact factory for other voltage options.

Cover Control ..... **Page 4-4**
Wiring Diagrams ..... **Page 4-20**
Dimensions ..... **Page 15-5**
Accessories ..... **Page 16-23**
Modification Codes ..... **Page 16-40**
Technical Data ..... **Page 18-19**

Table 4-6. Class ECX09 — Non-combination Non-reversing Starter (Continued)

Amps	Maximum hp ①			Coil Voltage @ 60 Hz ②	Type 1/IP23	Type 4X/IP66 ④	Type 12/IP65	Component
	Motor Voltage ⑤	1-Phase	3-Phase		Catalog Number ③	Catalog Number ③	Catalog Number ③	Catalog Number ③
Frame J								
40	115	3	—	120	ECX09J1AAA-_	ECX09J4AAA-_	ECX09J8AAA-_	XTAE040D00A_
	208	5	10	208	ECX09J1EAA-_	ECX09J4EAA-_	ECX09J8EAA-_	XTAE040D00E_
	230	7-1/2	15	240	ECX09J1BAA-_	ECX09J4BAA-_	ECX09J8BAA-_	XTAE040D00D_
	380	—	15	380/50 Hz	ECX09J1LAA-_	ECX09J4LAA-_	ECX09J8LAA-_	XTAE040D00L_
	460	—	30	480	ECX09J1CAA-_	ECX09J4CAA-_	ECX09J8CAA-_	XTAE040D00C_
	575	—	40	600	ECX09J1DAA-_	ECX09J4DAA-_	ECX09J8DAA-_	XTAE040D00D_
Frame K								
50	115	3	—	120	ECX09K1AAA-_	ECX09K4AAA-_	ECX09K8AAA-_	XTAE050D00A_
	208	7-1/2	15	208	ECX09K1EAA-_	ECX09K4EAA-_	ECX09K8EAA-_	XTAE050D00E_
	230	10	20	240	ECX09K1BAA-_	ECX09K4BAA-_	ECX09K8BAA-_	XTAE050D00B_
	380	—	20	380/50 Hz	ECX09K1LAA-_	ECX09K4LAA-_	ECX09K8LAA-_	XTAE050D00L_
	460	—	40	480	ECX09K1CAA-_	ECX09K4CAA-_	ECX09K8CAA-_	XTAE050D00C_
	575	—	50	600	ECX09K1DAA-_	ECX09K4DAA-_	ECX09K8DAA-_	XTAE050D00D_
Frame L								
65	115	5	—	120	ECX09L1AAA-_	ECX09L4AAA-_	ECX09L8AAA-_	XTAE065D00A_
	208	10	20	208	ECX09L1EAA-_	ECX09L4EAA-_	ECX09L8EAA-_	XTAE065D00E_
	230	15	25	240	ECX09L1BAA-_	ECX09L4BAA-_	ECX09L8BAA-_	XTAE065D00B_
	380	—	30	380/50 Hz	ECX09L1LAA-_	ECX09L4LAA-_	ECX09L8LAA-_	XTAE065D00L_
	460	—	50	480	ECX09L1CAA-_	ECX09L4CAA-_	ECX09L8CAA-_	XTAE065D00C_
	575	—	60	600	ECX09L1DAA-_	ECX09L4DAA-_	ECX09L8DAA-_	XTAE065D00D_
Frame M								
80	115	7-1/2	—	120	ECX09M1AAA-_	ECX09M4AAA-_	ECX09M8AAA-_	XTAE080F00A_
	208	15	25	208	ECX09M1EAA-_	ECX09M4EAA-_	ECX09M8EAA-_	XTAE080F00E_
	230	15	30	240	ECX09M1BAA-_	ECX09M4BAA-_	ECX09M8BAA-_	XTAE080F00B_
	380	—	50	380/50 Hz	ECX09M1LAA-_	ECX09M4LAA-_	ECX09M8LAA-_	XTAE080F00L_
	460	—	60	480	ECX09M1CAA-_	ECX09M4CAA-_	ECX09M8CAA-_	XTAE080F00C_
	575	—	75	600	ECX09M1DAA-_	ECX09M4DAA-_	ECX09M8DAA-_	XTAE080F00D_
Frame N								
95	115	7-1/2	—	120	ECX09N1AAA-_	ECX09N4AAA-_	ECX09N8AAA-_	XTAE095F00A_
	208	15	25	208	ECX09N1EAA-_	ECX09N4EAA-_	ECX09N8EAA-_	XTAE095F00E_
	230	15	40	240	ECX09N1BAA-_	ECX09N4BAA-_	ECX09N8BAA-_	XTAE095F00B_
	380	—	60	380/50 Hz	ECX09N1LAA-_	ECX09N4LAA-_	ECX09N8LAA-_	XTAE095F00L_
	460	—	75	480	ECX09N1CAA-_	ECX09N4CAA-_	ECX09N8CAA-_	XTAE095F00C_
	575	—	100	600	ECX09N1DAA-_	ECX09N4DAA-_	ECX09N8DAA-_	XTAE095F00D_
Frame P								
115	115	10	—	120	ECX09P1AAA-_	ECX09P4AAA-_	ECX09P8AAA-_	XTAE115G00A_
	208	25	40	208	ECX09P1EAA-_	ECX09P4EAA-_	ECX09P8EAA-_	XTAE115G00E_
	230	25	50	240	ECX09P1BAA-_	ECX09P4BAA-_	ECX09P8BAA-_	XTAE115G00B_
	380	—	60	380/50 Hz	ECX09P1LAA-_	ECX09P4LAA-_	ECX09P8LAA-_	XTAE115G00L_
	460	—	100	480	ECX09P1CAA-_	ECX09P4CAA-_	ECX09P8CAA-_	XTAE115G00C_
	575	—	125	600	ECX09P1DAA-_	ECX09P4DAA-_	ECX09P8DAA-_	XTAE115G00D_
Frame Q								
150	115	15	—	120	ECX09Q1AAA-_	ECX09Q4AAA-_	ECX09Q8AAA-_	XTAE150G00A_
	208	25	40	208	ECX09Q1EAA-_	ECX09Q4EAA-_	ECX09Q8EAA-_	XTAE150G00E_
	230	30	60	240	ECX09Q1BAA-_	ECX09Q4BAA-_	ECX09Q8BAA-_	XTAE150G00B_
	380	—	60	380/50 Hz	ECX09Q1LAA-_	ECX09Q4LAA-_	ECX09Q8LAA-_	XTAE150G00L_
	460	—	125	480	ECX09Q1CAA-_	ECX09Q4CAA-_	ECX09Q8CAA-_	XTAE150G00C_
	575	—	150	600	ECX09Q1DAA-_	ECX09Q4DAA-_	ECX09Q8DAA-_	XTAE150G00D_

① 1 hp = 0.746 kW.
② Voltage is listed @ 60 Hz unless otherwise noted. Other voltages available upon request.
③ Select proper "XTOB" Overload Amperage range as per motor FLA, see **Table 4-2**.
④ These are the Catalog Numbers for Type 4X 304-Grade Stainless Steel, as indicated by the seventh digit **4**. Example: ECX09B**4**AAA-_. To order Type 4X 316-Grade Stainless Steel, change that digit to **9**. To order Type 4 Painted Steel, change that digit to **3**. To order Nonmetallic, change that digit to **5**. For details on these Alternate Enclosures, see **Tab 14**.
⑤ Contact factory for other voltage options.

Cover Control ..... **Page 4-4**
Wiring Diagrams ..... **Page 4-20**
Dimensions ..... **Page 15-5**
Accessories ..... **Page 16-23**
Modification Codes ..... **Page 16-40**
Technical Data ..... **Page 18-19**

Table 4-7. Class ECX10 — Non-combination Reversing Starter

Amps	Maximum hp ①			Coil Voltage @ 60 Hz ②	Type 1/IP23	Type 4X/IP66 ④	Type 12/IP65	Component
	Motor Voltage ⑤	1-Phase	3-Phase		Catalog Number ③	Catalog Number ③	Catalog Number ③	Catalog Number ③
Frame B								
7	115	1/4	—	120	ECX10B1AAA-_	ECX10B4AAA-_	ECX10B8AAA-_	XTAR007B10A_
	208	3/4	1-1/2	208	ECX10B1EAA-_	ECX10B4EAA-_	ECX10B8EAA-_	XTAR007B10E_
	230	1	2	240	ECX10B1BAA-_	ECX10B4BAA-_	ECX10B8BAA-_	XTAR007B10B_
	380	—	3	380/50 Hz	ECX10B1LAA-_	ECX10B4LAA-_	ECX10B8LAA-_	XTAR007B10L_
	460	—	3	480	ECX10B1CAA-_	ECX10B4CAA-_	ECX10B8CAA-_	XTAR007B10C_
	575	—	5	600	ECX10B1DAA-_	ECX10B4DAA-_	ECX10B8DAA-_	XTAR007B10D_
Frame C								
9	115	1/2	—	120	ECX10C1AAA-_	ECX10C4AAA-_	ECX10C8AAA-_	XTAR009B10A_
	208	1	2	208	ECX10C1EAA-_	ECX10C4EAA-_	ECX10C8EAA-_	XTAR009B10E_
	230	1-1/2	3	240	ECX10C1BAA-_	ECX10C4BAA-_	ECX10C8BAA-_	XTAR009B10B_
	380	—	5	380/50 Hz	ECX10C1LAA-_	ECX10C4LAA-_	ECX10C8LAA-_	XTAR009B10L_
	460	—	5	480	ECX10C1CAA-_	ECX10C4CAA-_	ECX10C8CAA-_	XTAR009B10C_
	575	—	7-1/2	600	ECX10C1DAA-_	ECX10C4DAA-_	ECX10C8DAA-_	XTAR009B10D_
Frame D								
12	115	1/2	—	120	ECX10D1AAA-_	ECX10D4AAA-_	ECX10D8AAA-_	XTAR012B10A_
	208	1-1/2	3	208	ECX10D1EAA-_	ECX10D4EAA-_	ECX10D8EAA-_	XTAR012B10E_
	230	2	3	240	ECX10D1BAA-_	ECX10D4BAA-_	ECX10D8BAA-_	XTAR012B10B_
	380	—	5	380/50 Hz	ECX10D1LAA-_	ECX10D4LAA-_	ECX10D8LAA-_	XTAR012B10L_
	460	—	7-1/2	480	ECX10D1CAA-_	ECX10D4CAA-_	ECX10D8CAA-_	XTAR012B10C_
	575	—	10	600	ECX10D1DAA-_	ECX10D4DAA-_	ECX10D8DAA-_	XTAR012B10D_
Frame E								
15	115	3/4	—	120	ECX10E1AAA-_	ECX10E4AAA-_	ECX10E8AAA-_	XTAR015B10A_
	208	2	3	208	ECX10E1EAA-_	ECX10E4EAA-_	ECX10E8EAA-_	XTAR015B10E_
	230	2	3	240	ECX10E1BAA-_	ECX10E4BAA-_	ECX10E8BAA-_	XTAR015B10B_
	380	—	5	380/50 Hz	ECX10E1LAA-_	ECX10E4LAA-_	ECX10E8LAA-_	XTAR015B10L_
	460	—	7-1/2	480	ECX10E1CAA-_	ECX10E4CAA-_	ECX10E8CAA-_	XTAR015B10C_
	575	—	10	600	ECX10E1DAA-_	ECX10E4DAA-_	ECX10E8DAA-_	XTAR015B10D_
Frame F								
18	115	2	—	120	ECX10F1AAA-_	ECX10F4AAA-_	ECX10F8AAA-_	XTAR018C10A_
	208	2	5	208	ECX10F1EAA-_	ECX10F4EAA-_	ECX10F8EAA-_	XTAR018C10E_
	230	3	5	240	ECX10F1BAA-_	ECX10F4BAA-_	ECX10F8BAA-_	XTAR018C10B_
	380	—	7-1/2	380/50 Hz	ECX10F1LAA-_	ECX10F4LAA-_	ECX10F8LAA-_	XTAR018C10L_
	460	—	10	480	ECX10F1CAA-_	ECX10F4CAA-_	ECX10F8CAA-_	XTAR018C10C_
	575	—	15	600	ECX10F1DAA-_	ECX10F4DAA-_	ECX10F8DAA-_	XTAR018C10D_
Frame G								
25	115	2	—	120	ECX10G1AAA-_	ECX10G4AAA-_	ECX10G8AAA-_	XTAR025C10A_
	208	3	7-1/2	208	ECX10G1EAA-_	ECX10G4EAA-_	ECX10G8EAA-_	XTAR025C10E_
	230	5	7-1/2	240	ECX10G1BAA-_	ECX10G4BAA-_	ECX10G8BAA-_	XTAR025C10B_
	380	—	10	380/50 Hz	ECX10G1LAA-_	ECX10G4LAA-_	ECX10G8LAA-_	XTAR025C10L_
	460	—	15	480	ECX10G1CAA-_	ECX10G4CAA-_	ECX10G8CAA-_	XTAR025C10C_
	575	—	10	600	ECX10G1DAA-_	ECX10G4DAA-_	ECX10G8DAA-_	XTAR025C10D_
Frame H								
32	115	3	—	120	ECX10H1AAA-_	ECX10H4AAA-_	ECX10H8AAA-_	XTAR032C10A_
	208	5	10	208	ECX10H1EAA-_	ECX10H4EAA-_	ECX10H8EAA-_	XTAR032C10E_
	230	5	10	240	ECX10H1BAA-_	ECX10H4BAA-_	ECX10H8BAA-_	XTAR032C10B_
	380	—	15	380/50 Hz	ECX10H1LAA-_	ECX10H4LAA-_	ECX10H8LAA-_	XTAR032C10L_
	460	—	20	480	ECX10H1CAA-_	ECX10H4CAA-_	ECX10H8CAA-_	XTAR032C10C_
	575	—	25	600	ECX10H1DAA-_	ECX10H4DAA-_	ECX10H8DAA-_	XTAR032C10D_

① 1 hp = 0.746 kW.
② Voltage is listed @ 60 Hz unless otherwise noted. Other voltages available upon request.
③ Select proper "XTOB" Overload Amperage range as per motor FLA, see **Table 4-2**.
④ These are the Catalog Numbers for Type 4X 304-Grade Stainless Steel, as indicated by the seventh digit **4**. Example: ECX10B**4**AAA-_. To order Type 4X 316-Grade Stainless Steel, change that digit to **9**. To order Type 4 Painted Steel, change that digit to **3**. To order Nonmetallic, change that digit to **5**. For details on these Alternate Enclosures, see **Tab 14**.
⑤ Contact factory for other voltage options.

Cover Control ..... **Page 4-4**
Wiring Diagrams ..... **Page 4-20**
Dimensions ..... **Page 15-5**
Accessories ..... **Page 16-23**
Modification Codes ..... **Page 16-40**
Technical Data ..... **Page 18-19**

Table 4-7. Class ECX10 — Non-combination Reversing Starter (Continued)

Amps	Maximum hp ①			Coil Voltage @ 60 Hz ②	Type 1/IP23	Type 4X/IP66 ④	Type 12/IP65	Component
	Motor Voltage ⑤	1-Phase	3-Phase		Catalog Number ③	Catalog Number ③	Catalog Number ③	Catalog Number ③
Frame J								
40	115	3	—	120	ECX10J1AAA-_	ECX10J4AAA-_	ECX10J8AAA-_	XTAR040D00A_
	208	5	10	208	ECX10J1EAA-_	ECX10J4EAA-_	ECX10J8EAA-_	XTAR040D00E_
	230	7-1/2	15	240	ECX10J1BAA-_	ECX10J4BAA-_	ECX10J8BAA-_	XTAR040D00B_
	380	—	15	380/50 Hz	ECX10J1LAA-_	ECX10J4LAA-_	ECX10J8LAA-_	XTAR040D00L_
	460	—	30	480	ECX10J1CAA-_	ECX10J4CAA-_	ECX10J8CAA-_	XTAR040D00C_
	575	—	40	600	ECX10J1DAA-_	ECX10J4DAA-_	ECX10J8DAA-_	XTAR040D00D_
Frame K								
50	115	3	—	120	ECX10K1AAA-_	ECX10K4AAA-_	ECX10K8AAA-_	XTAR050D00A_
	208	7-1/2	15	208	ECX10K1EAA-_	ECX10K4EAA-_	ECX10K8EAA-_	XTAR050D00E_
	230	10	20	240	ECX10K1BAA-_	ECX10K4BAA-_	ECX10K8BAA-_	XTAR050D00B_
	380	—	20	380/50 Hz	ECX10K1LAA-_	ECX10K4LAA-_	ECX10K8LAA-_	XTAR050D00L_
	460	—	40	480	ECX10K1CAA-_	ECX10K4CAA-_	ECX10K8CAA-_	XTAR050D00C_
	575	—	50	600	ECX10K1DAA-_	ECX10K4DAA-_	ECX10K8DAA-_	XTAR050D00D_
Frame L								
65	115	5	—	120	ECX10L1AAA-_	ECX10L4AAA-_	ECX10L8AAA-_	XTAR065D00A_
	208	10	20	208	ECX10L1EAA-_	ECX10L4EAA-_	ECX10L8EAA-_	XTAR065D00E_
	230	15	25	240	ECX10L1BAA-_	ECX10L4BAA-_	ECX10L8BAA-_	XTAR065D00B_
	380	—	30	380/50 Hz	ECX10L1LAA-_	ECX10L4LAA-_	ECX10L8LAA-_	XTAR065D00L_
	460	—	50	480	ECX10L1CAA-_	ECX10L4CAA-_	ECX10L8CAA-_	XTAR065D00C_
	575	—	60	600	ECX10L1DAA-_	ECX10L4DAA-_	ECX10L8DAA-_	XTAR065D00D_
Frame M								
80	115	7-1/2	—	120	ECX10M1AAA-_	ECX10M4AAA-_	ECX10M8AAA-_	XTAR080F00A_
	208	15	25	208	ECX10M1EAA-_	ECX10M4EAA-_	ECX10M8EAA-_	XTAR080F00E_
	230	15	30	240	ECX10M1BAA-_	ECX10M4BAA-_	ECX10M8BAA-_	XTAR080F00B_
	380	—	50	380/50 Hz	ECX10M1LAA-_	ECX10M4LAA-_	ECX10M8LAA-_	XTAR080F00L_
	460	—	60	480	ECX10M1CAA-_	ECX10M4CAA-_	ECX10M8CAA-_	XTAR080F00C_
	575	—	75	600	ECX10M1DAA-_	ECX10M4DAA-_	ECX10M8DAA-_	XTAR080F00D_
Frame N								
95	115	7-1/2	—	120	ECX10N1AAA-_	ECX10N4AAA-_	ECX10N8AAA-_	XTAR095F00A_
	208	15	25	208	ECX10N1EAA-_	ECX10N4EAA-_	ECX10N8EAA-_	XTAR095F00E_
	230	15	40	240	ECX10N1BAA-_	ECX10N4BAA-_	ECX10N8BAA-_	XTAR095F00B_
	380	—	60	380/50 Hz	ECX10N1LAA-_	ECX10N4LAA-_	ECX10N8LAA-_	XTAR095F00L_
	460	—	75	480	ECX10N1CAA-_	ECX10N4CAA-_	ECX10N8CAA-_	XTAR095F00C_
	575	—	100	600	ECX10N1DAA-_	ECX10N4DAA-_	ECX10N8DAA-_	XTAR095F00D_
Frame P								
115	115	10	—	120	ECX10P1AAA-_	ECX10P4AAA-_	ECX10P8AAA-_	XTAR115G00A_
	208	25	40	208	ECX10P1EAA-_	ECX10P4EAA-_	ECX10P8EAA-_	XTAR115G00E_
	230	25	50	240	ECX10P1BAA-_	ECX10P4BAA-_	ECX10P8BAA-_	XTAR115G00B_
	380	—	60	380/50 Hz	ECX10P1LAA-_	ECX10P4LAA-_	ECX10P8LAA-_	XTAR115G00L_
	460	—	100	480	ECX10P1CAA-_	ECX10P4CAA-_	ECX10P8CAA-_	XTAR115G00C_
	575	—	125	600	ECX10P1DAA-_	ECX10P4DAA-_	ECX10P8DAA-_	XTAR115G00D_
Frame Q								
150	115	15	—	120	ECX10Q1AAA-_	ECX10Q4AAA-_	ECX10Q8AAA-_	XTAR150G00A_
	208	25	40	208	ECX10Q1EAA-_	ECX10Q4EAA-_	ECX10Q8EAA-_	XTAR150G00E_
	230	30	60	240	ECX10Q1BAA-_	ECX10Q4BAA-_	ECX10Q8BAA-_	XTAR150G00B_
	380	—	60	380/50 Hz	ECX10Q1LAA-_	ECX10Q4LAA-_	ECX10Q8LAA-_	XTAR150G00L_
	460	—	125	480	ECX10Q1CAA-_	ECX10Q4CAA-_	ECX10Q8CAA-_	XTAR150G00C_
	575	—	150	600	ECX10Q1DAA-_	ECX10Q4DAA-_	ECX10Q8DAA-_	XTAR150G00D_

① 1 hp = 0.746 kW.
② Voltage is listed @ 60 Hz unless otherwise noted. Other voltages available upon request.
③ Select proper "XTOB" Overload Amperage range as per motor FLA, see **Table 4-2**.
④ These are the Catalog Numbers for Type 4X 304-Grade Stainless Steel, as indicated by the seventh digit **4**. Example: ECX10B**4**AAA-_. To order Type 4X 316-Grade Stainless Steel, change that digit to **9**. To order Type 4 Painted Steel, change that digit to **3**. To order Nonmetallic, change that digit to **5**. For details on these Alternate Enclosures, see **Tab 14**.
⑤ Contact factory for other voltage options.

Cover Control ..... **Page 4-4**
Wiring Diagrams ..... **Page 4-20**
Dimensions ..... **Page 15-5**
Accessories ..... **Page 16-23**
Modification Codes ..... **Page 16-40**
Technical Data ..... **Page 18-19**

Table 4-8. Class ECX11 — Non-combination Non-reversing Starter with CPT

Amps	Maximum hp ①			Coil Voltage @ 60 Hz ②	Type 1/IP23	Type 4X/IP66 ④	Type 12/IP65	Component
	Motor Voltage ⑤	1-Phase	3-Phase		Catalog Number ③	Catalog Number ③	Catalog Number ③	Catalog Number ③
Frame B								
7	115	1/4	—	120	ECX11B1AAA-_	ECX11B4AAA-_	ECX11B8AAA-_	XTAE007B10A_
	208	3/4	1-1/2	208	ECX11B1EAA-_	ECX11B4EAA-_	ECX11B8EAA-_	XTAE007B10E_
	230	1	2	240	ECX11B1BAA-_	ECX11B4BAA-_	ECX11B8BAA-_	XTAE007B10B_
	380	—	3	380/50 Hz	ECX11B1LAA-_	ECX11B4LAA-_	ECX11B8LAA-_	XTAE007B10L_
	460	—	3	480	ECX11B1CAA-_	ECX11B4CAA-_	ECX11B8CAA-_	XTAE007B10C_
	575	—	5	600	ECX11B1DAA-_	ECX11B4DAA-_	ECX11B8DAA-_	XTAE007B10D_
Frame C								
9	115	1/2	—	120	ECX11C1AAA-_	ECX11C4AAA-_	ECX11C8AAA-_	XTAE009B10A_
	208	1	2	208	ECX11C1EAA-_	ECX11C4EAA-_	ECX11C8EAA-_	XTAE009B10E_
	230	1-1/2	3	240	ECX11C1BAA-_	ECX11C4BAA-_	ECX11C8BAA-_	XTAE009B10B_
	380	—	5	380/50 Hz	ECX11C1LAA-_	ECX11C4LAA-_	ECX11C8LAA-_	XTAE009B10L_
	460	—	5	480	ECX11C1CAA-_	ECX11C4CAA-_	ECX11C8CAA-_	XTAE009B10C_
	575	—	7-1/2	600	ECX11C1DAA-_	ECX11C4DAA-_	ECX11C8DAA-_	XTAE009B10D_
Frame D								
12	115	1/2	—	120	ECX11D1AAA-_	ECX11D4AAA-_	ECX11D8AAA-_	XTAE012B10A_
	208	1-1/2	3	208	ECX11D1EAA-_	ECX11D4EAA-_	ECX11D8EAA-_	XTAE012B10E_
	230	2	3	240	ECX11D1BAA-_	ECX11D4BAA-_	ECX11D8BAA-_	XTAE012B10B_
	380	—	5	380/50 Hz	ECX11D1LAA-_	ECX11D4LAA-_	ECX11D8LAA-_	XTAE012B10L_
	460	—	7-1/2	480	ECX11D1CAA-_	ECX11D4CAA-_	ECX11D8CAA-_	XTAE012B10C_
	575	—	10	600	ECX11D1DAA-_	ECX11D4DAA-_	ECX11D8DAA-_	XTAE012B10D_
Frame E								
15	115	3/4	—	120	ECX11E1AAA-_	ECX11E4AAA-_	ECX11E8AAA-_	XTAE015B10A_
	208	2	3	208	ECX11E1EAA-_	ECX11E4EAA-_	ECX11E8EAA-_	XTAE015B10E_
	230	2	3	240	ECX11E1BAA-_	ECX11E4BAA-_	ECX11E8BAA-_	XTAE015B10B_
	380	—	5	380/50 Hz	ECX11E1LAA-_	ECX11E4LAA-_	ECX11E8LAA-_	XTAE015B10L_
	460	—	7-1/2	480	ECX11E1CAA-_	ECX11E4CAA-_	ECX11E8CAA-_	XTAE015B10C_
	575	—	10	600	ECX11E1DAA-_	ECX11E4DAA-_	ECX11E8DAA-_	XTAE015B10D_
Frame F								
18	115	2	—	120	ECX11F1AAA-_	ECX11F4AAA-_	ECX11F8AAA-_	XTAE018C10A_
	208	2	5	208	ECX11F1EAA-_	ECX11F4EAA-_	ECX11F8EAA-_	XTAE018C10E_
	230	3	5	240	ECX11F1BAA-_	ECX11F4BAA-_	ECX11F8BAA-_	XTAE018C10B_
	380	—	7-1/2	380/50 Hz	ECX11F1LAA-_	ECX11F4LAA-_	ECX11F8LAA-_	XTAE018C10L_
	460	—	10	480	ECX11F1CAA-_	ECX11F4CAA-_	ECX11F8CAA-_	XTAE018C10C_
	575	—	15	600	ECX11F1DAA-_	ECX11F4DAA-_	ECX11F8DAA-_	XTAE018C10D_
Frame G								
25	115	2	—	120	ECX11G1AAA-_	ECX11G4AAA-_	ECX11G8AAA-_	XTAE025C10A_
	208	3	7-1/2	208	ECX11G1EAA-_	ECX11G4EAA-_	ECX11G8EAA-_	XTAE025C10E_
	230	5	7-1/2	240	ECX11G1BAA-_	ECX11G4BAA-_	ECX11G8BAA-_	XTAE025C10B_
	380	—	10	380/50 Hz	ECX11G1LAA-_	ECX11G4LAA-_	ECX11G8LAA-_	XTAE025C10L_
	460	—	15	480	ECX11G1CAA-_	ECX11G4CAA-_	ECX11G8CAA-_	XTAE025C10C_
	575	—	20	600	ECX11G1DAA-_	ECX11G4DAA-_	ECX11G8DAA-_	XTAE025C10D_
Frame H								
32	115	3	—	120	ECX11H1AAA-_	ECX11H4AAA-_	ECX11H8AAA-_	XTAE032C10A_
	208	5	10	208	ECX11H1EAA-_	ECX11H4EAA-_	ECX11H8EAA-_	XTAE032C10E_
	230	5	10	240	ECX11H1BAA-_	ECX11H4BAA-_	ECX11H8BAA-_	XTAE032C10B_
	380	—	15	380/50 Hz	ECX11H1LAA-_	ECX11H4LAA-_	ECX11H8LAA-_	XTAE032C10L_
	460	—	20	480	ECX11H1CAA-_	ECX11H4CAA-_	ECX11H8CAA-_	XTAE032C10C_
	575	—	25	600	ECX11H1DAA-_	ECX11H4DAA-_	ECX11H8DAA-_	XTAE032C10D_

① 1 hp = 0.746 kW.
② Voltage is listed @ 60 Hz unless otherwise noted. Other voltages available upon request.
③ Select proper "XTOB" Overload Amperage range as per motor FLA, see **Table 4-2**.
④ These are the Catalog Numbers for Type 4X 304-Grade Stainless Steel, as indicated by the seventh digit **4**. Example: ECX11B**4**AAA-_. To order Type 4X 316-Grade Stainless Steel, change that digit to **9**. To order Type 4 Painted Steel, change that digit to **3**. To order Nonmetallic, change that digit to **5**. For details on these Alternate Enclosures, see **Tab 14**.
⑤ Contact factory for other voltage options.

Cover Control ..... **Page 4-4**
Wiring Diagrams ..... **Page 4-20**
Dimensions ..... **Page 15-5**
Accessories ..... **Page 16-23**
Modification Codes ..... **Page 16-40**
Technical Data ..... **Page 18-19**

Table 4-8. Class ECX11 — Non-combination Non-reversing Starter with CPT (Continued)

Amps	Maximum hp ①			Coil Voltage @ 60 Hz ②	Type 1/IP23	Type 4X/IP66 ④	Type 12/IP65	Component
	Motor Voltage ⑤	1-Phase	3-Phase		Catalog Number ③	Catalog Number ③	Catalog Number ③	Catalog Number ③
Frame J								
40	115	3	—	120	ECX11J1AAA-_	ECX11J4AAA-_	ECX11J8AAA-_	XTAE040D00A_
	208	5	10	208	ECX11J1EAA-_	ECX11J4EAA-_	ECX11J8EAA-_	XTAE040D00E_
	230	7-1/2	15	240	ECX11J1BAA-_	ECX11J4BAA-_	ECX11J8BAA-_	XTAE040D00B_
	380	—	15	380/50 Hz	ECX11J1LAA-_	ECX11J4LAA-_	ECX11J8LAA-_	XTAE040D00L_
	460	—	30	480	ECX11J1CAA-_	ECX11J4CAA-_	ECX11J8CAA-_	XTAE040D00C_
	575	—	40	600	ECX11J1DAA-_	ECX11J4DAA-_	ECX11J8DAA-_	XTAE040D00D_
Frame K								
50	115	3	—	120	ECX11K1AAA-_	ECX11K4AAA-_	ECX11K8AAA-_	XTAE050D00A_
	208	7-1/2	15	208	ECX11K1EAA-_	ECX11K4EAA-_	ECX11K8EAA-_	XTAE050D00E_
	230	10	20	240	ECX11K1BAA-_	ECX11K4BAA-_	ECX11K8BAA-_	XTAE050D00B_
	380	—	20	380/50 Hz	ECX11K1LAA-_	ECX11K4LAA-_	ECX11K8LAA-_	XTAE050D00L_
	460	—	40	480	ECX11K1CAA-_	ECX11K4CAA-_	ECX11K8CAA-_	XTAE050D00C_
	575	—	50	600	ECX11K1DAA-_	ECX11K4DAA-_	ECX11K8DAA-_	XTAE050D00D_
Frame L								
65	115	5	—	120	ECX11L1AAA-_	ECX11L4AAA-_	ECX11L8AAA-_	XTAE065D00A_
	208	10	20	208	ECX11L1EAA-_	ECX11L4EAA-_	ECX11L8EAA-_	XTAE065D00E_
	230	15	25	240	ECX11L1BAA-_	ECX11L4BAA-_	ECX11L8BAA-_	XTAE065D00B_
	380	—	30	380/50 Hz	ECX11L1LAA-_	ECX11L4LAA-_	ECX11L8LAA-_	XTAE065D00L_
	460	—	50	480	ECX11L1CAA-_	ECX11L4CAA-_	ECX11L8CAA-_	XTAE065D00C_
	575	—	60	600	ECX11L1DAA-_	ECX11L4DAA-_	ECX11L8DAA-_	XTAE065D00D_
Frame M								
80	115	7-1/2	—	120	ECX11M1AAA-_	ECX11M4AAA-_	ECX11M8AAA-_	XTAE080F00A_
	208	15	25	208	ECX11M1EAA-_	ECX11M4EAA-_	ECX11M8EAA-_	XTAE080F00E_
	230	15	30	240	ECX11M1BAA-_	ECX11M4BAA-_	ECX11M8BAA-_	XTAE080F00B_
	380	—	50	380/50 Hz	ECX11M1LAA-_	ECX11M4LAA-_	ECX11M8LAA-_	XTAE080F00L_
	460	—	60	480	ECX11M1CAA-_	ECX11M4CAA-_	ECX11M8CAA-_	XTAE080F00C_
	575	—	75	600	ECX11M1DAA-_	ECX11M4DAA-_	ECX11M8DAA-_	XTAE080F00D_
Frame N								
95	115	7-1/2	—	120	ECX11N1AAA-_	ECX11N4AAA-_	ECX11N8AAA-_	XTAE095F00A_
	208	15	25	208	ECX11N1EAA-_	ECX11N4EAA-_	ECX11N8EAA-_	XTAE095F00E_
	230	15	40	240	ECX11N1BAA-_	ECX11N4BAA-_	ECX11N8BAA-_	XTAE095F00B_
	380	—	60	380/50 Hz	ECX11N1LAA-_	ECX11N4LAA-_	ECX11N8LAA-_	XTAE095F00L_
	460	—	75	480	ECX11N1CAA-_	ECX11N4CAA-_	ECX11N8CAA-_	XTAE095F00C_
	575	—	100	600	ECX11N1DAA-_	ECX11N4DAA-_	ECX11N8DAA-_	XTAE095F00D_
Frame P								
115	115	10	—	120	ECX11P1AAA-_	ECX11P4AAA-_	ECX11P8AAA-_	XTAE115G00A_
	208	25	40	208	ECX11P1EAA-_	ECX11P4EAA-_	ECX11P8EAA-_	XTAE115G00E_
	230	25	50	240	ECX11P1BAA-_	ECX11P4BAA-_	ECX11P8BAA-_	XTAE115G00B_
	380	—	60	380/50 Hz	ECX11P1LAA-_	ECX11P4LAA-_	ECX11P8LAA-_	XTAE115G00L_
	460	—	100	480	ECX11P1CAA-_	ECX11P4CAA-_	ECX11P8CAA-_	XTAE115G00C_
	575	—	125	600	ECX11P1DAA-_	ECX11P4DAA-_	ECX11P8DAA-_	XTAE115G00D_
Frame Q								
150	115	15	—	120	ECX11Q1AAA-_	ECX11Q4AAA-_	ECX11Q8AAA-_	XTAE150G00A_
	208	25	40	208	ECX11Q1EAA-_	ECX11Q4EAA-_	ECX11Q8EAA-_	XTAE150G00E_
	230	30	60	240	ECX11Q1BAA-_	ECX11Q4BAA-_	ECX11Q8BAA-_	XTAE150G00B_
	380	—	60	380/50 Hz	ECX11Q1LAA-_	ECX11Q4LAA-_	ECX11Q8LAA-_	XTAE150G00L_
	460	—	125	480	ECX11Q1CAA-_	ECX11Q4CAA-_	ECX11Q8CAA-_	XTAE150G00C_
	575	—	150	600	ECX11Q1DAA-_	ECX11Q4DAA-_	ECX11Q8DAA-_	XTAE150G00D_

① 1 hp = 0.746 kW.
② Voltage is listed @ 60 Hz unless otherwise noted. Other voltages available upon request.
③ Select proper "XTOB" Overload Amperage range as per motor FLA, see **Table 4-2**.
④ These are the Catalog Numbers for Type 4X 304-Grade Stainless Steel, as indicated by the seventh digit **4**. Example: ECX11B**4**AAA-_. To order Type 4X 316-Grade Stainless Steel, change that digit to **9**. To order Type 4 Painted Steel, change that digit to **3**. To order Nonmetallic, change that digit to **5**. For details on these Alternate Enclosures, see **Tab 14**.
⑤ Contact factory for other voltage options.

Cover Control ..... **Page 4-4**
Wiring Diagrams ..... **Page 4-20**
Dimensions ..... **Page 15-5**
Accessories ..... **Page 16-23**
Modification Codes ..... **Page 16-40**
Technical Data ..... **Page 18-19**

Table 4-9. Class ECX19 — Combination Non-reversing Starter — Fusible/Non-fusible Disconnect

Amps	Maximum hp ①			Coil Voltage @ 60 Hz ②	Fuse Clips	Type 1/IP23	Type 4X/IP66 ④	Type 12/IP65	Component
	Motor Voltage ⑤	1-Phase	3-Phase			Catalog Number ③	Catalog Number ③	Catalog Number ③	Catalog Number ③
Frame B									
7	—	—	—	—	30A	ECX19B1AAA-_	ECX19B4AAA-_	ECX19B8AAA-_	XTAE007B10A_
	115	1/4	—	120		ECX19B1AAC-_	ECX19B4AAC-_	ECX19B8AAC-_	XTAE007B10A_
	208	3/4	1-1/2	208		ECX19B1EAC-_	ECX19B4EAC-_	ECX19B8EAC-_	XTAE007B10E_
	230	1	2	240		ECX19B1BAC-_	ECX19B4BAC-_	ECX19B8BAC-_	XTAE007B10B_
	380	—	3	380/50 Hz		ECX19B1LAC-_	ECX19B4LAC-_	ECX19B8LAC-_	XTAE007B10L_
	460	—	3	480		ECX19B1CAC-_	ECX19B4CAC-_	ECX19B8CAC-_	XTAE007B10C_
	575	—	5	600		ECX19B1DAC-_	ECX19B4DAC-_	ECX19B8DAC-_	XTAE007B10D_
Frame C									
9	—	—	—	—	30A	ECX19C1AAA-_	ECX19C4AAA-_	ECX19C8AAA-_	XTAE009B10A_
	115	1/2	—	120		ECX19C1AAC-_	ECX19C4AAC-_	ECX19C8AAC-_	XTAE009B10A_
	208	1	2	208		ECX19C1EAC-_	ECX19C4EAC-_	ECX19C8EAC-_	XTAE009B10E_
	230	1-1/2	3	240		ECX19C1BAC-_	ECX19C4BAC-_	ECX19C8BAC-_	XTAE009B10B_
	380	—	5	380/50 Hz		ECX19C1LAC-_	ECX19C4LAC-_	ECX19C8LAC-_	XTAE009B10L_
	460	—	5	480		ECX19C1CAC-_	ECX19C4CAC-_	ECX19C8CAC-_	XTAE009B10C_
	575	—	7-1/2	600		ECX19C1DAC-_	ECX19C4DAC-_	ECX19C8DAC-_	XTAE009B10D_
Frame D									
12	—	—	—	—	30A	ECX19D1AAA-_	ECX19D4AAA-_	ECX19D8AAA-_	XTAE012B10A_
	115	1/2	—	120		ECX19D1AAC-_	ECX19D4AAC-_	ECX19D8AAC-_	XTAE012B10A_
	208	1-1/2	3	208		ECX19D1EAC-_	ECX19D4EAC-_	ECX19D8EAC-_	XTAE012B10E_
	230	2	3	240		ECX19D1BAC-_	ECX19D4BAC-_	ECX19D8BAC-_	XTAE012B10B_
	380	—	5	380/50 Hz		ECX19D1LAC-_	ECX19D4LAC-_	ECX19D8LAC-_	XTAE012B10L_
	460	—	7-1/2	480		ECX19D1CAC-_	ECX19D4CAC-_	ECX19D8CAC-_	XTAE012B10C_
	575	—	10	600		ECX19D1DAC-_	ECX19D4DAC-_	ECX19D8DAC-_	XTAE012B10D_
Frame E									
15	—	—	—	—	30A	ECX19E1AAA-_	ECX19E4AAA-_	ECX19E8AAA-_	XTAE015B10A_
	115	3/4	—	120		ECX19E1AAC-_	ECX19E4AAC-_	ECX19E8AAC-_	XTAE015B10A_
	208	2	3	208		ECX19E1EAC-_	ECX19E4EAC-_	ECX19E8EAC-_	XTAE015B10E_
	230	2	3	240		ECX19E1BAC-_	ECX19E4BAC-_	ECX19E8BAC-_	XTAE015B10B_
	380	—	5	380/50 Hz		ECX19E1LAC-_	ECX19E4LAC-_	ECX19E8LAC-_	XTAE015B10L_
	460	—	7-1/2	480		ECX19E1CAC-_	ECX19E4CAC-_	ECX19E8CAC-_	XTAE015B10C_
	575	—	10	600		ECX19E1DAC-_	ECX19E4DAC-_	ECX19E8DAC-_	XTAE015B10D_
Frame F									
18	—	—	—	—	30A	ECX19F1AAA-_	ECX19F4AAA-_	ECX19F8AAA-_	XTAE018C10A_
	115	2	—	120		ECX19F1AAC-_	ECX19F4AAC-_	ECX19F8AAC-_	XTAE018C10A_
	208	2	5	208		ECX19F1EAC-_	ECX19F4EAC-_	ECX19F8EAC-_	XTAE018C10E_
	230	3	5	240		ECX19F1BAC-_	ECX19F4BAC-_	ECX19F8BAC-_	XTAE018C10B_
	380	—	7-1/2	380/50 Hz		ECX19F1LAC-_	ECX19F4LAC-_	ECX19F8LAC-_	XTAE018C10L_
	460	—	10	480		ECX19F1CAC-_	ECX19F4CAC-_	ECX19F8CAC-_	XTAE018C10C_
	575	—	15	600		ECX19F1DAC-_	ECX19F4DAC-_	ECX19F8DAC-_	XTAE018C10D_
Frame G									
25	—	—	—	—	30A	ECX19G1AAA-_	ECX19G4AAA-_	ECX19G8AAA-_	XTAE025C10A_
	115	2	—	120		ECX19G1AAC-_	ECX19G4AAC-_	ECX19G8AAC-_	XTAE025C10A_
	208	3	7-1/2	208		ECX19G1EAC-_	ECX19G4EAC-_	ECX19G8EAC-_	XTAE025C10E_
	230	5	7-1/2	240		ECX19G1BAC-_	ECX19G4BAC-_	ECX19G8BAC-_	XTAE025C10B_
	380	—	10	380/50 Hz		ECX19G1LAC-_	ECX19G4LAC-_	ECX19G8LAC-_	XTAE025C10L_
	460	—	15	480		ECX19G1CAC-_	ECX19G4CAC-_	ECX19G8CAC-_	XTAE025C10C_
	575	—	10	600		ECX19G1DAC-_	ECX19G4DAC-_	ECX19G8DAC-_	XTAE025C10D_
Frame H									
32	—	—	—	—	60A	ECX19H1AAA-_	ECX19H4AAA-_	ECX19H8AAA-_	XTAE032C10A_
	115	3	—	120		ECX19H1AAE-_	ECX19H4AAE-_	ECX19H8AAE-_	XTAE032C10A_
	208	5	10	208		ECX19H1EAE-_	ECX19H4EAE-_	ECX19H8EAE-_	XTAE032C10E_
	230	5	10	240		ECX19H1BAE-_	ECX19H4BAE-_	ECX19H8BAE-_	XTAE032C10B_
	380	—	15	380/50 Hz		ECX19H1LAE-_	ECX19H4LAE-_	ECX19H8LAE-_	XTAE032C10L_
	460	—	20	480		ECX19H1CAE-_	ECX19H4CAE-_	ECX19H8CAE-_	XTAE032C10C_
	575	—	25	600		ECX19H1DAE-_	ECX19H4DAE-_	ECX19H8DAE-_	XTAE032C10D_

① 1 hp = 0.746 kW.
② Voltage is listed @ 60 Hz unless otherwise noted. Other voltages available upon request.
③ Select proper "XTOB" Overload Amperage range as per motor FLA, see **Table 4-2**.
④ These are the Catalog Numbers for Type 4X 304-Grade Stainless Steel, as indicated by the seventh digit **4**. Example: ECX19B**4**AAA-_. To order Type 4X 316-Grade Stainless Steel, change that digit to **9**. To order Type 4 Painted Steel, change that digit to **3**. To order Nonmetallic, change that digit to **5**. For details on these Alternate Enclosures, see **Tab 14**.
⑤ Contact factory for other voltage options.

Cover Control ..... **Page 4-4**
Wiring Diagrams ..... **Page 4-20**
Dimensions ..... **Page 15-5**
Accessories ..... **Page 16-23**
Modification Codes ..... **Page 16-40**
Technical Data ..... **Page 18-19**

Table 4-9. Class ECX19 — Combination Non-reversing Starter — Fusible/Non-fusible Disconnect (Continued)

Amps	Maximum hp ①			Coil Voltage @ 60 Hz ②	Fuse Clips	Type 1/IP23	Type 4X/IP66 ④	Type 12/IP65	Component
	Motor Voltage ⑥	1-Phase	3-Phase			Catalog Number ③	Catalog Number ③	Catalog Number ③	Catalog Number ③
Frame J									
40	—	—	—	—	60A	ECX19J1AAA-_	ECX19J4AAA-_	ECX19J8AAA-_	XTAE040D00A_
	115	3	—	120		ECX19J1AAE-_	ECX19J4AAE-_	ECX19J8AAE-_	XTAE040D00A_
	208	5	10	208		ECX19J1EAE-_	ECX19J4EAE-_	ECX19J8EAE-_	XTAE040D00E_
	230	7-1/2	15	240		ECX19J1BAE-_	ECX19J4BAE-_	ECX19J8BAE-_	XTAE040D00B_
	380	—	15	380/50 Hz		ECX19J1LAE-_	ECX19J4LAE-_	ECX19J8LAE-_	XTAE040D00L_
	460	—	30	480		ECX19J1CAE-_	ECX19J4CAE-_	ECX19J8CAE-_	XTAE040D00C_
	575	—	40	600		ECX19J1DAE-_	ECX19J4DAE-_	ECX19J8DAE-_	XTAE040D00D_
Frame K									
50	—	—	—	—	100A	ECX19K1AAA-_	ECX19K4AAA-_	ECX19K8AAA-_	XTAE050D00A_
	115	3	—	120		ECX19K1AAG-_	ECX19K4AAG-_	ECX19K8AAG-_	XTAE050D00A_
	208	7-1/2	15	208		ECX19K1EAG-_	ECX19K4EAG-_	ECX19K8EAG-_	XTAE050D00E_
	230	10	20	240		ECX19K1BAG-_	ECX19K4BAG-_	ECX19K8BAG-_	XTAE050D00B_
	380	—	20	380/50 Hz		ECX19K1LAG-_	ECX19K4LAG-_	ECX19K8LAG-_	XTAE050D00L_
	460	—	40	480		ECX19K1CAG-_	ECX19K4CAG-_	ECX19K8CAG-_	XTAE050D00C_
	575	—	50	600		ECX19K1DAG-_	ECX19K4DAG-_	ECX19K8DAG-_	XTAE050D00D_
Frame L									
65	—	—	—	—	100A	ECX19L1AAA-_	ECX19L4AAA-_	ECX19L8AAA-_	XTAE065D00A_
	115	5	—	120		ECX19L1AAG-_	ECX19L4AAG-_	ECX19L8AAG-_	XTAE065D00A_
	208	10	20	208		ECX19L1EAG-_	ECX19L4EAG-_	ECX19L8EAG-_	XTAE065D00E_
	230	15	25	240		ECX19L1BAG-_	ECX19L4BAG-_	ECX19L8BAG-_	XTAE065D00B_
	380	—	30	380/50 Hz		ECX19L1LAG-_	ECX19L4LAG-_	ECX19L8LAG-_	XTAE065D00L_
	460	—	50	480		ECX19L1CAG-_	ECX19L4CAG-_	ECX19L8CAG-_	XTAE065D00C_
	575	—	60	600		ECX19L1DAG-_	ECX19L4DAG-_	ECX19L8DAG-_	XTAE065D00D_
Frame M									
80	—	—	—	—	100A	ECX19M1AAA-_	ECX19M4AAA-_	ECX19M8AAA-_	XTAE080F00A_
	115	7-1/2	—	120		ECX19M1AAG-_	ECX19M4AAG-_	ECX19M8AAG-_	XTAE080F00A_
	208	15	25	208		ECX19M1EAG-_	ECX19M4EAG-_	ECX19M8EAG-_	XTAE080F00E_
	230	15	30	240		ECX19M1BAG-_	ECX19M4BAG-_	ECX19M8BAG-_	XTAE080F00B_
	380	—	50	380/50 Hz		ECX19M1LAG-_	ECX19M4LAG-_	ECX19M8LAG-_	XTAE080F00L_
	460	—	60	480		ECX19M1CAG-_	ECX19M4CAG-_	ECX19M8CAG-_	XTAE080F00C_
	575	—	75	600		ECX19M1DAG-_	ECX19M4DAG-_	ECX19M8DAG-_	XTAE080F00D_
Frame N ⑥									
95	—	—	—	—	⑥	ECX19N1AAA-_	ECX19N4AAA-_	ECX19N8AAA-_	XTAE095F00A_
	115	7-1/2	—	120		ECX19N1AAA-_	ECX19N4AAA-_	ECX19N8AAA-_	XTAE095F00A_
	208	15	25	208		ECX19N1EAA-_	ECX19N4EAA-_	ECX19N8EAA-_	XTAE095F00E_
	230	15	40	240		ECX19N1BAA-_	ECX19N4BAA-_	ECX19N8BAA-_	XTAE095F00B_
	380	—	60	380/50 Hz		ECX19N1LAA-_	ECX19N4LAA-_	ECX19N8LAA-_	XTAE095F00L_
	460	—	75	480		ECX19N1CAA-_	ECX19N4CAA-_	ECX19N8CAA-_	XTAE095F00C_
	575	—	100	600		ECX19N1DAA-_	ECX19N4DAA-_	ECX19N8DAA-_	XTAE095F00D_
Frame P ⑥									
105	—	—	—	—	⑥	ECX19P1AAA-_	ECX19P4AAA-_	ECX19P8AAA-_	XTAE115G00A_
	115	10	—	120		ECX19P1AAA-_	ECX19P4AAA-_	ECX19P8AAA-_	XTAE115G00A_
	208	25	30	208		ECX19P1EAA-_	ECX19P4EAA-_	ECX19P8EAA-_	XTAE115G00E_
	230	25	40	240		ECX19P1BAA-_	ECX19P4BAA-_	ECX19P8BAA-_	XTAE115G00B_
	380	—	60	380/50 Hz		ECX19P1LAA-_	ECX19P4LAA-_	ECX19P8LAA-_	XTAE115G00L_
	460	—	75	480		ECX19P1CAA-_	ECX19P4CAA-_	ECX19P8CAA-_	XTAE115G00C_
	575	—	100	600		ECX19P1DAA-_	ECX19P4DAA-_	ECX19P8DAA-_	XTAE115G00D_

① 1 hp = 0.746 kW.
② Voltage is listed @ 60 Hz unless otherwise noted. Other voltages available upon request.
③ Select proper "XTOB" Overload Amperage range as per motor FLA, see **Table 4-2**.
④ These are the Catalog Numbers for Type 4X 304-Grade Stainless Steel, as indicated by the seventh digit **4**. Example: ECX19B**4**AAA-_. To order Type 4X 316-Grade Stainless Steel, change that digit to **9**. To order Type 4 Painted Steel, change that digit to **3**. To order Nonmetallic, change that digit to **5**. For details on these Alternate Enclosures, see **Tab 14**.
⑤ Contact factory for other voltage options.
⑥ Non-fused Disconnect only.

Cover Control ..... **Page 4-4**
Wiring Diagrams ..... **Page 4-20**
Dimensions ..... **Page 15-5**
Accessories ..... **Page 16-23**
Modification Codes ..... **Page 16-40**
Technical Data ..... **Page 18-19**

Table 4-10. Class ECX20 — Combination Reversing Starter — Fusible/Non-fusible Disconnect

Amps	Maximum hp ①			Coil Voltage @ 60 Hz ②	Fuse Clips	Type 1/IP23	Type 4X/IP66 ④	Type 12/IP65	Component
	Motor Voltage ⑤	1-Phase	3-Phase			Catalog Number ③	Catalog Number ③	Catalog Number ③	Catalog Number ③
Frame B									
7	—	—	—	—	30A	ECX20B1AAA-_	ECX20B4AAA-_	ECX20B8AAA-_	XTAR007B10A_
	115	1/4	—	120		ECX20B1AAC-_	ECX20B4AAC-_	ECX20B8AAC-_	XTAR007B10A_
	208	3/4	1-1/2	208		ECX20B1EAC-_	ECX20B4EAC-_	ECX20B8EAC-_	XTAR007B10E_
	230	1	2	240		ECX20B1BAC-_	ECX20B4BAC-_	ECX20B8BAC-_	XTAR007B10B_
	380	—	3	380/50 Hz		ECX20B1LAC-_	ECX20B4LAC-_	ECX20B8LAC-_	XTAR007B10L_
	460	—	3	480		ECX20B1CAC-_	ECX20B4CAC-_	ECX20B8CAC-_	XTAR007B10C_
	575	—	5	600		ECX20B1DAC-_	ECX20B4DAC-_	ECX20B8DAC-_	XTAR007B10D_
Frame C									
9	—	—	—	—	30A	ECX20C1AAA-_	ECX20C4AAA-_	ECX20C8AAA-_	XTAR009B10A_
	115	1/2	—	120		ECX20C1AAC-_	ECX20C4AAC-_	ECX20C8AAC-_	XTAR009B10A_
	208	1	2	208		ECX20C1EAC-_	ECX20C4EAC-_	ECX20C8EAC-_	XTAR009B10E_
	230	1-1/2	3	240		ECX20C1BAC-_	ECX20C4BAC-_	ECX20C8BAC-_	XTAR009B10B_
	380	—	5	380/50 Hz		ECX20C1LAC-_	ECX20C4LAC-_	ECX20C8LAC-_	XTAR009B10L_
	460	—	5	480		ECX20C1CAC-_	ECX20C4CAC-_	ECX20C8CAC-_	XTAR009B10C_
	575	—	7-1/2	600		ECX20C1DAC-_	ECX20C4DAC-_	ECX20C8DAC-_	XTAR009B10D_
Frame D									
12	—	—	—	—	30A	ECX20D1AAA-_	ECX20D4AAA-_	ECX20D8AAA-_	XTAR012B10A_
	115	1/2	—	120		ECX20D1AAC-_	ECX20D4AAC-_	ECX20D8AAC-_	XTAR012B10A_
	208	1-1/2	3	208		ECX20D1EAC-_	ECX20D4EAC-_	ECX20D8EAC-_	XTAR012B10E_
	230	2	3	240		ECX20D1BAC-_	ECX20D4BAC-_	ECX20D8BAC-_	XTAR012B10B_
	380	—	5	380/50 Hz		ECX20D1LAC-_	ECX20D4LAC-_	ECX20D8LAC-_	XTAR012B10L_
	460	—	7-1/2	480		ECX20D1CAC-_	ECX20D4CAC-_	ECX20D8CAC-_	XTAR012B10C_
	575	—	10	600		ECX20D1DAC-_	ECX20D4DAC-_	ECX20D8DAC-_	XTAR012B10D_
Frame E									
15	—	—	—	—	30A	ECX20E1AAA-_	ECX20E4AAA-_	ECX20E8AAA-_	XTAR015B10A_
	115	3/4	—	120		ECX20E1AAC-_	ECX20E4AAC-_	ECX20E8AAC-_	XTAR015B10A_
	208	2	3	208		ECX20E1EAC-_	ECX20E4EAC-_	ECX20E8EAC-_	XTAR015B10E_
	230	2	3	240		ECX20E1BAC-_	ECX20E4BAC-_	ECX20E8BAC-_	XTAR015B10B_
	380	—	5	380/50 Hz		ECX20E1LAC-_	ECX20E4LAC-_	ECX20E8LAC-_	XTAR015B10L_
	460	—	7-1/2	480		ECX20E1CAC-_	ECX20E4CAC-_	ECX20E8CAC-_	XTAR015B10C_
	575	—	10	600		ECX20E1DAC-_	ECX20E4DAC-_	ECX20E8DAC-_	XTAR015B10D_
Frame F									
18	—	—	—	—	30A	ECX20F1AAA-_	ECX20F4AAA-_	ECX20F8AAA-_	XTAR018C10A_
	115	2	—	120		ECX20F1AAC-_	ECX20F4AAC-_	ECX20F8AAC-_	XTAR018C10A_
	208	2	5	208		ECX20F1EAC-_	ECX20F4EAC-_	ECX20F8EAC-_	XTAR018C10E_
	230	3	5	240		ECX20F1BAC-_	ECX20F4BAC-_	ECX20F8BAC-_	XTAR018C10B_
	380	—	7-1/2	380/50 Hz		ECX20F1LAC-_	ECX20F4LAC-_	ECX20F8LAC-_	XTAR018C10L_
	460	—	10	480		ECX20F1CAC-_	ECX20F4CAC-_	ECX20F8CAC-_	XTAR018C10C_
	575	—	15	600		ECX20F1DAC-_	ECX20F4DAC-_	ECX20F8DAC-_	XTAR018C10D_
Frame G									
25	—	—	—	—	30A	ECX20G1AAA-_	ECX20G4AAA-_	ECX20G8AAA-_	XTAR025C10A_
	115	2	—	120		ECX20G1AAC-_	ECX20G4AAC-_	ECX20G8AAC-_	XTAR025C10A_
	208	3	7-1/2	208		ECX20G1EAC-_	ECX20G4EAC-_	ECX20G8EAC-_	XTAR025C10E_
	230	5	7-1/2	240		ECX20G1BAC-_	ECX20G4BAC-_	ECX20G8BAC-_	XTAR025C10B_
	380	—	10	380/50 Hz		ECX20G1LAC-_	ECX20G4LAC-_	ECX20G8LAC-_	XTAR025C10L_
	460	—	15	480		ECX20G1CAC-_	ECX20G4CAC-_	ECX20G8CAC-_	XTAR025C10C_
	575	—	10	600		ECX20G1DAC-_	ECX20G4DAC-_	ECX20G8DAC-_	XTAR025C10D_
Frame H									
32	—	—	—	—	60A	ECX20H1AAA-_	ECX20H4AAA-_	ECX20H8AAA-_	XTAR032C10A_
	115	3	—	120		ECX20H1AAE-_	ECX20H4AAE-_	ECX20H8AAE-_	XTAR032C10A_
	208	5	10	208		ECX20H1EAE-_	ECX20H4EAE-_	ECX20H8EAE-_	XTAR032C10E_
	230	5	10	240		ECX20H1BAE-_	ECX20H4BAE-_	ECX20H8BAE-_	XTAR032C10B_
	380	—	15	380/50 Hz		ECX20H1LAE-_	ECX20H4LAE-_	ECX20H8LAE-_	XTAR032C10L_
	460	—	20	480		ECX20H1CAE-_	ECX20H4CAE-_	ECX20H8CAE-_	XTAR032C10C_
	575	—	25	600		ECX20H1DAE-_	ECX20H4DAE-_	ECX20H8DAE-_	XTAR032C10D_

① 1 hp = 0.746 kW.
② Voltage is listed @ 60 Hz unless otherwise noted. Other voltages available upon request.
③ Select proper "XTOB" Overload Amperage range as per motor FLA, see **Table 4-2**.
④ These are the Catalog Numbers for Type 4X 304-Grade Stainless Steel, as indicated by the seventh digit **4**. Example: ECX20B**4**AAA-_. To order Type 4X 316-Grade Stainless Steel, change that digit to **9**. To order Type 4 Painted Steel, change that digit to **3**. To order Nonmetallic, change that digit to **5**. For details on these Alternate Enclosures, see **Tab 14**.
⑤ Contact factory for other voltage options.

Cover Control ..... **Page 4-4**
Wiring Diagrams ..... **Page 4-20**
Dimensions ..... **Page 15-5**
Accessories ..... **Page 16-23**
Modification Codes ..... **Page 16-40**
Technical Data ..... **Page 18-19**

Table 4-10. Class ECX20 — Combination Reversing Starter — Fusible/Non-fusible Disconnect (Continued)

Amps	Maximum hp ①			Coil Voltage @ 60 Hz ②	Fuse Clips	Type 1/IP23	Type 4X/IP66 ④	Type 12/IP65	Component
	Motor Voltage ⑥	1-Phase	3-Phase			Catalog Number ③	Catalog Number ③	Catalog Number ③	Catalog Number ③
Frame J									
40	—	—	—	—	60A	ECX20J1AAA-_	ECX20J4AAA-_	ECX20J8AAA-_	XTAR040D00A_
	115	3	—	120		ECX20J1AAE-_	ECX20J4AAE-_	ECX20J8AAE-_	XTAR040D00A_
	208	5	10	208		ECX20J1EAE-_	ECX20J4EAE-_	ECX20J8EAE-_	XTAR040D00E_
	230	7-1/2	15	240		ECX20J1BAE-_	ECX20J4BAE-_	ECX20J8BAE-_	XTAR040D00B_
	380	—	15	380/50 Hz		ECX20J1LAE-_	ECX20J4LAE-_	ECX20J8LAE-_	XTAR040D00L_
	460	—	30	480		ECX20J1CAE-_	ECX20J4CAE-_	ECX20J8CAE-_	XTAR040D00C_
	575	—	40	600		ECX20J1DAE-_	ECX20J4DAE-_	ECX20J8DAE-_	XTAR040D00D_
Frame K									
50	—	—	—	—	100A	ECX20K1AAA-_	ECX20K4AAA-_	ECX20K8AAA-_	XTAR050D00A_
	115	3	—	120		ECX20K1AAG-_	ECX20K4AAG-_	ECX20K8AAG-_	XTAR050D00A_
	208	7-1/2	15	208		ECX20K1EAG-_	ECX20K4EAG-_	ECX20K8EAG-_	XTAR050D00E_
	230	10	20	240		ECX20K1BAG-_	ECX20K4BAG-_	ECX20K8BAG-_	XTAR050D00B_
	380	—	20	380/50 Hz		ECX20K1LAG-_	ECX20K4LAG-_	ECX20K8LAG-_	XTAR050D00L_
	460	—	40	480		ECX20K1CAG-_	ECX20K4CAG-_	ECX20K8CAG-_	XTAR050D00C_
	575	—	50	600		ECX20K1DAG-_	ECX20K4DAG-_	ECX20K8DAG-_	XTAR050D00D_
Frame L									
65	—	—	—	—	100A	ECX20L1AAA-_	ECX20L4AAA-_	ECX20L8AAA-_	XTAR065D00A_
	115	5	—	120		ECX20L1AAG-_	ECX20L4AAG-_	ECX20L8AAG-_	XTAR065D00A_
	208	10	20	208		ECX20L1EAG-_	ECX20L4EAG-_	ECX20L8EAG-_	XTAR065D00E_
	230	15	25	240		ECX20L1BAG-_	ECX20L4BAG-_	ECX20L8BAG-_	XTAR065D00B_
	380	—	30	380/50 Hz		ECX20L1LAG-_	ECX20L4LAG-_	ECX20L8LAG-_	XTAR065D00L_
	460	—	50	480		ECX20L1CAG-_	ECX20L4CAG-_	ECX20L8CAG-_	XTAR065D00C_
	575	—	60	600		ECX20L1DAG-_	ECX20L4DAG-_	ECX20L8DAG-_	XTAR065D00D_
Frame M									
80	—	—	—	—	100A	ECX20M1AAA-_	ECX20M4AAA-_	ECX20M8AAA-_	XTAR080F00A_
	115	7-1/2	—	120		ECX20M1AAG-_	ECX20M4AAG-_	ECX20M8AAG-_	XTAR080F00A_
	208	15	25	208		ECX20M1EAG-_	ECX20M4EAG-_	ECX20M8EAG-_	XTAR080F00E_
	230	15	30	240		ECX20M1BAG-_	ECX20M4BAG-_	ECX20M8BAG-_	XTAR080F00B_
	380	—	50	380/50 Hz		ECX20M1LAG-_	ECX20M4LAG-_	ECX20M8LAG-_	XTAR080F00L_
	460	—	60	480		ECX20M1CAG-_	ECX20M4CAG-_	ECX20M8CAG-_	XTAR080F00C_
	575	—	75	600		ECX20M1DAG-_	ECX20M4DAG-_	ECX20M8DAG-_	XTAR080F00D_
Frame N ⑥									
95	—	—	—	—	⑥	ECX20N1AAA-_	ECX20N4AAA-_	ECX20N8AAA-_	XTAR095F00A_
	115	7-1/2	—	120		ECX20N1AAA-_	ECX20N4AAA-_	ECX20N8AAA-_	XTAR095F00A_
	208	15	25	208		ECX20N1EAA-_	ECX20N4EAA-_	ECX20N8EAA-_	XTAR095F00E_
	230	15	40	240		ECX20N1BAA-_	ECX20N4BAA-_	ECX20N8BAA-_	XTAR095F00B_
	380	—	60	380/50 Hz		ECX20N1LAA-_	ECX20N4LAA-_	ECX20N8LAA-_	XTAR095F00L_
	460	—	75	480		ECX20N1CAA-_	ECX20N4CAA-_	ECX20N8CAA-_	XTAR095F00C_
	575	—	100	600		ECX20N1DAA-_	ECX20N4DAA-_	ECX20N8DAA-_	XTAR095F00D_
Frame P ⑥									
105	—	—	—	—	⑥	ECX20P1AAA-_	ECX20P4AAA-_	ECX20P8AAA-_	XTAR115G00A_
	115	10	—	120		ECX20P1AAA-_	ECX20P4AAA-_	ECX20P8AAA-_	XTAR115G00A_
	208	25	30	208		ECX20P1EAA-_	ECX20P4EAA-_	ECX20P8EAA-_	XTAR115G00E_
	230	25	40	240		ECX20P1BAA-_	ECX20P4BAA-_	ECX20P8BAA-_	XTAR115G00B_
	380	—	60	380/50 Hz		ECX20P1LAA-_	ECX20P4LAA-_	ECX20P8LAA-_	XTAR115G00L_
	460	—	75	480		ECX20P1CAA-_	ECX20P4CAA-_	ECX20P8CAA-_	XTAR115G00C_
	575	—	100	600		ECX20P1DAA-_	ECX20P4DAA-	ECX20P8DAA-_	XTAR115G00D_

① 1 hp = 0.746 kW.
② Voltage is listed @ 60 Hz unless otherwise noted. Other voltages available upon request.
③ Select proper "XTOB" Overload Amperage range as per motor FLA, see **Table 4-2**.
④ These are the Catalog Numbers for Type 4X 304-Grade Stainless Steel, as indicated by the seventh digit **4**. Example: ECX20B4AAA-_. To order Type 4X 316-Grade Stainless Steel, change that digit to **9**. To order Type 4 Painted Steel, change that digit to **3**. To order Nonmetallic, change that digit to **5**. For details on these Alternate Enclosures, see **Tab 14**.
⑤ Contact factory for other voltage options.
⑥ Non-fused Disconnect only.

Cover Control ..... **Page 4-4**
Wiring Diagrams ..... **Page 4-20**
Dimensions ..... **Page 15-5**
Accessories ..... **Page 16-23**
Modification Codes ..... **Page 16-40**
Technical Data ..... **Page 18-19**

Table 4-11. Class ECX25 — Combination Non-reversing Starter — Circuit Breaker

Amps	Maximum hp ①			Coil Voltage @ 60 Hz ②	HMCP	Type 1/IP23	Type 4X/IP66 ④	Type 12/IP65	Component
	Motor Voltage ⑤	1-Phase	3-Phase			Catalog Number ③	Catalog Number ③	Catalog Number ③	Catalog Number ③
Frame B									
7	115	1/4	—	120	7A	ECX25B1AAC-_	ECX25B4AAC-_	ECX25B8AAC-_	XTAE007B10A_
	208	3/4	1-1/2	208		ECX25B1EAC-_	ECX25B4EAC-_	ECX25B8EAC-_	XTAE007B10E_
	230	1	2	240		ECX25B1BAC-_	ECX25B4BAC-_	ECX25B8BAC-_	XTAE007B10B_
	380	—	3	380/50 Hz		ECX25B1LAC-_	ECX25B4LAC-_	ECX25B8LAC-_	XTAE007B10L_
	460	—	3	480		ECX25B1CAC-_	ECX25B4CAC-_	ECX25B8CAC-_	XTAE007B10C_
	575	—	5	600		ECX25B1DAC-_	ECX25B4DAC-_	ECX25B8DAC-_	XTAE007B10D_
Frame C									
9	115	1/2	—	120	15A	ECX25C1AAD-_	ECX25C4AAD-_	ECX25C8AAD-_	XTAE009B10A_
	208	1	2	208		ECX25C1EAD-_	ECX25C4EAD-_	ECX25C8EAD-_	XTAE009B10E_
	230	1-1/2	3	240		ECX25C1BAD-_	ECX25C4BAD-_	ECX25C8BAD-_	XTAE009B10B_
	380	—	5	380/50 Hz		ECX25C1LAD-_	ECX25C4LAD-_	ECX25C8LAD-_	XTAE009B10L_
	460	—	5	480		ECX25C1CAD-_	ECX25C4CAD-_	ECX25C8CAD-_	XTAE009B10C_
	575	—	7-1/2	600		ECX25C1DAD-_	ECX25C4DAD-_	ECX25C8DAD-_	XTAE009B10D_
Frame D									
12	115	1/2	—	120	15A	ECX25D1AAD-_	ECX25D4AAD-_	ECX25D8AAD-_	XTAE012B10A_
	208	1-1/2	3	208		ECX25D1EAD-_	ECX25D4EAD-_	ECX25D8EAD-_	XTAE012B10E_
	230	2	3	240		ECX25D1BAD-_	ECX25D4BAD-_	ECX25D8BAD-_	XTAE012B10B_
	380	—	5	380/50 Hz		ECX25D1LAD-_	ECX25D4LAD-_	ECX25D8LAD-_	XTAE012B10L_
	460	—	7-1/2	480		ECX25D1CAD-_	ECX25D4CAD-_	ECX25D8CAD-_	XTAE012B10C_
	575	—	10	600		ECX25D1DAD-_	ECX25D4DAD-_	ECX25D8DAD-_	XTAE012B10D_
Frame E									
15	115	3/4	—	120	30A	ECX25E1AAE-_	ECX25E4AAE-_	ECX25E8AAE-_	XTAE015B10A_
	208	2	3	208		ECX25E1EAE-_	ECX25E4EAE-_	ECX25E8EAE-_	XTAE015B10E_
	230	2	3	240		ECX25E1BAE-_	ECX25E4BAE-_	ECX25E8BAE-_	XTAE015B10B_
	380	—	5	380/50 Hz		ECX25E1LAE-_	ECX25E4LAE-_	ECX25E8LAE-_	XTAE015B10L_
	460	—	7-1/2	480		ECX25E1CAE-_	ECX25E4CAE-_	ECX25E8CAE-_	XTAE015B10C_
	575	—	10	600		ECX25E1DAE-_	ECX25E4DAE-_	ECX25E8DAE-_	XTAE015B10D_
Frame F									
18	115	2	—	120	30A	ECX25F1AAE-_	ECX25F4AAE-_	ECX25F8AAE-_	XTAE018C10A_
	208	2	5	208		ECX25F1EAE-_	ECX25F4EAE-_	ECX25F8EAE-_	XTAE018C10E_
	230	3	5	240		ECX25F1BAE-_	ECX25F4BAE-_	ECX25F8BAE-_	XTAE018C10B_
	380	—	7-1/2	380/50 Hz		ECX25F1LAE-_	ECX25F4LAE-_	ECX25F8LAE-_	XTAE018C10L_
	460	—	10	480		ECX25F1CAE-_	ECX25F4CAE-_	ECX25F8CAE-_	XTAE018C10C_
	575	—	15	600		ECX25F1DAE-_	ECX25F4DAE-_	ECX25F8DAE-_	XTAE018C10D_
Frame G									
25	115	2	—	120	50A	ECX25G1AAF-_	ECX25G4AAF-_	ECX25G8AAF-_	XTAE025C10A_
	208	3	7-1/2	208		ECX25G1EAF-_	ECX25G4EAF-_	ECX25G8EAF-_	XTAE025C10E_
	230	5	7-1/2	240		ECX25G1BAF-_	ECX25G4BAF-_	ECX25G8BAF-_	XTAE025C10B_
	380	—	10	380/50 Hz		ECX25G1LAF-_	ECX25G4LAF-_	ECX25G8LAF-_	XTAE025C10L_
	460	—	15	480		ECX25G1CAF-_	ECX25G4CAF-_	ECX25G8CAF-_	XTAE025C10C_
	575	—	10	600		ECX25G1DAF-_	ECX25G4DAF-_	ECX25G8DAF-_	XTAE025C10D_
Frame H									
32	115	3	—	120	50A	ECX25H1AAF-_	ECX25H4AAF-_	ECX25H8AAF-_	XTAE032C10A_
	208	5	10	208		ECX25H1EAF-_	ECX25H4EAF-_	ECX25H8EAF-_	XTAE032C10E_
	230	5	10	240		ECX25H1BAF-_	ECX25H4BAF-_	ECX25H8BAF-_	XTAE032C10B_
	380	—	15	380/50 Hz		ECX25H1LAF-_	ECX25H4LAF-_	ECX25H8LAF-_	XTAE032C10L_
	460	—	20	480		ECX25H1CAF-_	ECX25H4CAF-_	ECX25H8CAF-_	XTAE032C10C_
	575	—	25	600		ECX25H1DAF-_	ECX25H4DAF-_	ECX25H8DAF-_	XTAE032C10D_

① 1 hp = 0.746 kW.
② Voltage is listed @ 60 Hz unless otherwise noted. Other voltages available upon request.
③ Select proper "XTOB" Overload Amperage range as per motor FLA, see **Table 4-2**.
④ These are the Catalog Numbers for Type 4X 304-Grade Stainless Steel, as indicated by the seventh digit **4**. Example: ECX25B4AAA-_. To order Type 4X 316-Grade Stainless Steel, change that digit to **9**. To order Type 4 Painted Steel, change that digit to **3**. To order Nonmetallic, change that digit to **5**. For details on these Alternate Enclosures, see **Tab 14**.
⑤ Contact factory for other voltage options.

Cover Control ..... **Page 4-4**
Wiring Diagrams ..... **Page 4-20**
Dimensions ..... **Page 15-5**
Accessories ..... **Page 16-23**
Modification Codes ..... **Page 16-40**
Technical Data ..... **Page 18-19**

Table 4-11. Class ECX25 — Combination Non-reversing Starter — Circuit Breaker (Continued)

Amps	Maximum hp ①			Coil Voltage @ 60 Hz ②	HMCP	Type 1/IP23	Type 4X/IP66 ④	Type 12/IP65	Component
	Motor Voltage ⑤	1-Phase	3-Phase			Catalog Number ③	Catalog Number ③	Catalog Number ③	Catalog Number ③
Frame J									
40	115	3	—	120	50A	ECX25J1AAF-_	ECX25J4AAF-_	ECX25J8AAF-_	XTAE040D00A_
	208	5	10	208		ECX25J1EAF-_	ECX25J4EAF-_	ECX25J8EAF-_	XTAE040D00E_
	230	7-1/2	15	240		ECX25J1BAF-_	ECX25J4BAF-_	ECX25J8BAF-_	XTAE040D00B_
	380	—	15	380/50 Hz		ECX25J1LAF-_	ECX25J4LAF-_	ECX25J8LAF-_	XTAE040D00L_
	460	—	30	480		ECX25J1CAF-_	ECX25J4CAF-_	ECX25J8CAF-_	XTAE040D00C_
	575	—	40	600		ECX25J1DAF-_	ECX25J4DAF-_	ECX25J8DAF-_	XTAE040D00D_
Frame K									
50	115	3	—	120	70A	ECX25K1AAW-_	ECX25K4AAW-_	ECX25K8AAW-_	XTAE050D00A_
	208	7-1/2	15	208		ECX25K1EAW-_	ECX25K4EAW-_	ECX25K8EAW-_	XTAE050D00E_
	230	10	20	240		ECX25K1BAW-_	ECX25K4BAW-_	ECX25K8BAW-_	XTAE050D00B_
	380	—	20	380/50 Hz		ECX25K1LAW-_	ECX25K4LAW-_	ECX25K8LAW-_	XTAE050D00L_
	460	—	40	480		ECX25K1CAW-_	ECX25K4CAW-_	ECX25K8CAW-_	XTAE050D00C_
	575	—	50	600		ECX25K1DAW-_	ECX25K4DAW-_	ECX25K8DAW-_	XTAE050D00D_
Frame L									
65	115	5	—	120	70A	ECX25L1AAW-_	ECX25L4AAW-_	ECX25L8AAW-_	XTAE065D00A_
	208	10	20	208		ECX25L1EAW-_	ECX25L4EAW-_	ECX25L8EAW-_	XTAE065D00E_
	230	15	25	240		ECX25L1BAW-_	ECX25L4BAW-_	ECX25L8BAW-_	XTAE065D00B_
	380	—	30	380/50 Hz		ECX25L1LAW-_	ECX25L4LAW-_	ECX25L8LAW-_	XTAE065D00L_
	460	—	50	480		ECX25L1CAW-_	ECX25L4CAW-_	ECX25L8CAW-_	XTAE065D00C_
	575	—	60	600		ECX25L1DAW-_	ECX25L4DAW-_	ECX25L8DAW-_	XTAE065D00D_
Frame M									
80	115	7-1/2	—	120	100A	ECX25M1AAG-_	ECX25M4AAG-_	ECX25M8AAG-_	XTAE080F00A_
	208	15	25	208		ECX25M1EAG-_	ECX25M4EAG-_	ECX25M8EAG-_	XTAE080F00E_
	230	15	30	240		ECX25M1BAG-_	ECX25M4BAG-_	ECX25M8BAG-_	XTAE080F00B_
	380	—	50	380/50 Hz		ECX25M1LAG-_	ECX25M4LAG-_	ECX25M8LAG-_	XTAE080F00L_
	460	—	60	480		ECX25M1CAG-_	ECX25M4CAG-_	ECX25M8CAG-_	XTAE080F00C_
	575	—	75	600		ECX25M1DAG-_	ECX25M4DAG-_	ECX25M8DAG-_	XTAE080F00D_
Frame N									
95	115	7-1/2	—	120	100A	ECX25N1AAG-_	ECX25N4AAG-_	ECX25N8AAG-_	XTAE095F00A_
	208	15	25	208		ECX25N1EAG-_	ECX25N4EAG-_	ECX25N8EAG-_	XTAE095F00E_
	230	15	40	240		ECX25N1BAG-_	ECX25N4BAG-_	ECX25N8BAG-_	XTAE095F00B_
	380	—	60	380/50 Hz		ECX25N1LAG-_	ECX25N4LAG-_	ECX25N8LAG-_	XTAE095F00L_
	460	—	75	480		ECX25N1CAG-_	ECX25N4CAG-_	ECX25N8CAG-_	XTAE095F00C_
	575	—	100	600		ECX25N1DAG-_	ECX25N4DAG-_	ECX25N8DAG-_	XTAE095F00D_
Frame P									
115	115	10	—	120	150A	ECX25P1AAH-_	ECX25P4AAH-_	ECX25P8AAH-_	XTAE115G00A_
	208	25	40	208		ECX25P1EAH-_	ECX25P4EAH-_	ECX25P8EAH-_	XTAE115G00E_
	230	25	50	240		ECX25P1BAH-_	ECX25P4BAH-_	ECX25P8BAH-_	XTAE115G00B_
	380	—	60	380/50 Hz		ECX25P1LAH-_	ECX25P4LAH-_	ECX25P8LAH-_	XTAE115G00L_
	460	—	100	480		ECX25P1CAH-_	ECX25P4CAH-_	ECX25P8CAH-_	XTAE115G00C_
	575	—	125	600		ECX25P1DAH-_	ECX25P4DAH-_	ECX25P8DAH-_	XTAE115G00D_
Frame Q									
125	115	15	—	120	150A	ECX25Q1AAH-_	ECX25Q4AAH-_	ECX25Q8AAH-_	XTAE150G00A_
	208	25	40	208		ECX25Q1EAH-_	ECX25Q4EAH-_	ECX25Q8EAH-_	XTAE150G00E_
	230	25	50	240		ECX25Q1BAH-_	ECX25Q4BAH-_	ECX25Q8BAH-_	XTAE150G00B_
	380	—	75	380/50 Hz		ECX25Q1LAH-_	ECX25Q4LAH-_	ECX25Q8LAH-_	XTAE150G00L_
	460	—	100	480		ECX25Q1CAH-_	ECX25Q4CAH-_	ECX25Q8CAH-_	XTAE150G00C_
	575	—	125	600		ECX25Q1DAH-_	ECX25Q4DAH-_	ECX25Q8DAH-_	XTAE150G00D_

① 1 hp = 0.746 kW.
② Voltage is listed @ 60 Hz unless otherwise noted. Other voltages available upon request.
③ Select proper "XTOB" Overload Amperage range as per motor FLA, see **Table 4-2**.
④ These are the Catalog Numbers for Type 4X 304-Grade Stainless Steel, as indicated by the seventh digit **4**. Example: ECX25B4AAA-_. To order Type 4X 316-Grade Stainless Steel, change that digit to **9**. To order Type 4 Painted Steel, change that digit to **3**. To order Nonmetallic, change that digit to **5**. For details on these Alternate Enclosures, see **Tab 14**.
⑤ Contact factory for other voltage options.

Cover Control ..... **Page 4-4**
Wiring Diagrams ..... **Page 4-20**
Dimensions ..... **Page 15-5**
Accessories ..... **Page 16-23**
Modification Codes ..... **Page 16-40**
Technical Data ..... **Page 18-19**

Table 4-12. Class ECX26 — Combination Reversing Starter — Circuit Breaker

Amps	Maximum hp ①			Coil Voltage @ 60 Hz ②	HMCP	Type 1/IP23	Type 4X/IP66 ④	Type 12/IP65	Component
	Motor Voltage ⑤	1-Phase	3-Phase			Catalog Number ③	Catalog Number ③	Catalog Number ③	Catalog Number ③
Frame B									
7	115	1/4	—	120	7A	ECX26B1AAC-_	ECX26B4AAC-_	ECX26B8AAC-_	XTAR007B10A_
	208	3/4	1-1/2	208		ECX26B1EAC-_	ECX26B4EAC-_	ECX26B8EAC-_	XTAR007B10E_
	230	1	2	240		ECX26B1BAC-_	ECX26B4BAC-_	ECX26B8BAC-_	XTAR007B10B_
	380	—	3	380/50 Hz		ECX26B1LAC-_	ECX26B4LAC-_	ECX26B8LAC-_	XTAR007B10L_
	460	—	3	480		ECX26B1CAC-_	ECX26B4CAC-_	ECX26B8CAC-_	XTAR007B10C_
	575	—	5	600		ECX26B1DAC-_	ECX26B4DAC-_	ECX26B8DAC-_	XTAR007B10D_
Frame C									
9	115	1/2	—	120	15A	ECX26C1AAD-_	ECX26C4AAD-_	ECX26C8AAD-_	XTAR009B10A_
	208	1	2	208		ECX26C1EAD-_	ECX26C4EAD-_	ECX26C8EAD-_	XTAR009B10E_
	230	1-1/2	3	240		ECX26C1BAD-_	ECX26C4BAD-_	ECX26C8BAD-_	XTAR009B10B_
	380	—	5	380/50 Hz		ECX26C1LAD-_	ECX26C4LAD-_	ECX26C8LAD-_	XTAR009B10L_
	460	—	5	480		ECX26C1CAD-_	ECX26C4CAD-_	ECX26C8CAD-_	XTAR009B10C_
	575	—	7-1/2	600		ECX26C1DAD-_	ECX26C4DAD-_	ECX26C8DAD-_	XTAR009B10D_
Frame D									
12	115	1/2	—	120	15A	ECX26D1AAD-_	ECX26D4AAD-_	ECX26D8AAD-_	XTAR012B10A_
	208	1-1/2	3	208		ECX26D1EAD-_	ECX26D4EAD-_	ECX26D8EAD-_	XTAR012B10E_
	230	2	3	240		ECX26D1BAD-_	ECX26D4BAD-_	ECX26D8BAD-_	XTAR012B10B_
	380	—	5	380/50 Hz		ECX26D1LAD-_	ECX26D4LAD-_	ECX26D8LAD-_	XTAR012B10L_
	460	—	7-1/2	480		ECX26D1CAD-_	ECX26D4CAD-_	ECX26D8CAD-_	XTAR012B10C_
	575	—	10	600		ECX26D1DAD-_	ECX26D4DAD-_	ECX26D8DAD-_	XTAR012B10D_
Frame E									
15	115	3/4	—	120	30A	ECX26E1AAE-_	ECX26E4AAE-_	ECX26E8AAE-_	XTAR015B10A_
	208	2	3	208		ECX26E1EAE-_	ECX26E4EAE-_	ECX26E8EAE-_	XTAR015B10E_
	230	2	3	240		ECX26E1BAE-_	ECX26E4BAE-_	ECX26E8BAE-_	XTAR015B10B_
	380	—	5	380/50 Hz		ECX26E1LAE-_	ECX26E4LAE-_	ECX26E8LAE-_	XTAR015B10L_
	460	—	7-1/2	480		ECX26E1CAE-_	ECX26E4CAE-_	ECX26E8CAE-_	XTAR015B10C_
	575	—	10	600		ECX26E1DAE-_	ECX26E4DAE-_	ECX26E8DAE-_	XTAR015B10D_
Frame F									
18	115	2	—	120	30A	ECX26F1AAE-_	ECX26F4AAE-_	ECX26F8AAE-_	XTAR018C10A_
	208	2	5	208		ECX26F1EAE-_	ECX26F4EAE-_	ECX26F8EAE-_	XTAR018C10E_
	230	3	5	240		ECX26F1BAE-_	ECX26F4BAE-_	ECX26F8BAE-_	XTAR018C10B_
	380	—	7-1/2	380/50 Hz		ECX26F1LAE-_	ECX26F4LAE-_	ECX26F8LAE-_	XTAR018C10L_
	460	—	10	480		ECX26F1CAE-_	ECX26F4CAE-_	ECX26F8CAE-_	XTAR018C10C_
	575	—	15	600		ECX26F1DAE-_	ECX26F4DAE-_	ECX26F8DAE-_	XTAR018C10D_
Frame G									
25	115	2	—	120	50A	ECX26G1AAF-_	ECX26G4AAF-_	ECX26G8AAF-_	XTAR025C10A_
	208	3	7-1/2	208		ECX26G1EAF-_	ECX26G4EAF-_	ECX26G8EAF-_	XTAR025C10E_
	230	5	7-1/2	240		ECX26G1BAF-_	ECX26G4BAF-_	ECX26G8BAF-_	XTAR025C10B_
	380	—	10	380/50 Hz		ECX26G1LAF-_	ECX26G4LAF-_	ECX26G8LAF-_	XTAR025C10L_
	460	—	15	480		ECX26G1CAF-_	ECX26G4CAF-_	ECX26G8CAF-_	XTAR025C10C_
	575	—	10	600		ECX26G1DAF-_	ECX26G4DAF-_	ECX26G8DAF-_	XTAR025C10D_
Frame H									
32	115	3	—	120	50A	ECX26H1AAF-_	ECX26H4AAF-_	ECX26H8AAF-_	XTAR032C10A_
	208	5	10	208		ECX26H1EAF-_	ECX26H4EAF-_	ECX26H8EAF-_	XTAR032C10E_
	230	5	10	240		ECX26H1BAF-_	ECX26H4BAF-_	ECX26H8BAF-_	XTAR032C10B_
	380	—	15	380/50 Hz		ECX26H1LAF-_	ECX26H4LAF-_	ECX26H8LAF-_	XTAR032C10L_
	460	—	20	480		ECX26H1CAF-_	ECX26H4CAF-_	ECX26H8CAF-_	XTAR032C10C_
	575	—	25	600		ECX26H1DAF-_	ECX26H4DAF-_	ECX26H8DAF-_	XTAR032C10D_

① 1 hp = 0.746 kW.
② Voltage is listed @ 60 Hz unless otherwise noted. Other voltages available upon request.
③ Select proper "XTOB" Overload Amperage range as per motor FLA, see **Table 4-2**.
④ These are the Catalog Numbers for Type 4X 304-Grade Stainless Steel, as indicated by the seventh digit **4**. Example: ECX26B4AAA-_. To order Type 4X 316-Grade Stainless Steel, change that digit to **9**. To order Type 4 Painted Steel, change that digit to **3**. To order Nonmetallic, change that digit to **5**. For details on these Alternate Enclosures, see **Tab 14**.
⑤ Contact factory for other voltage options.

Cover Control ..... **Page 4-4**
Wiring Diagrams ..... **Page 4-20**
Dimensions ..... **Page 15-5**
Accessories ..... **Page 16-23**
Modification Codes ..... **Page 16-40**
Technical Data ..... **Page 18-19**

Table 4-12. Class ECX26 — Combination Reversing Starter — Circuit Breaker (Continued)

Amps	Maximum hp ①			Coil Voltage @ 60 Hz ②	HMCP	Type 1/IP23	Type 4X/IP66 ④	Type 12/IP65	Component
	Motor Voltage ⑤	1-Phase	3-Phase			Catalog Number ③	Catalog Number ③	Catalog Number ③	Catalog Number ③
Frame J									
40	115	3	—	120	50A	ECX26J1AAF-_	ECX26J4AAF-_	ECX26J8AAF-_	XTAR040D00A_
	208	5	10	208		ECX26J1EAF-_	ECX26J4EAF-_	ECX26J8EAF-_	XTAR040D00E_
	230	7-1/2	15	240		ECX26J1BAF-_	ECX26J4BAF-_	ECX26J8BAF-_	XTAR040D00B_
	380	—	15	380/50 Hz		ECX26J1LAF-_	ECX26J4LAF-_	ECX26J8LAF-_	XTAR040D00L_
	460	—	30	480		ECX26J1CAF-_	ECX26J4CAF-_	ECX26J8CAF-_	XTAR040D00C_
	575	—	40	600		ECX26J1DAF-_	ECX26J4DAF-_	ECX26J8DAF-_	XTAR040D00D_
Frame K									
50	115	3	—	120	70A	ECX26K1AAW-_	ECX26K4AAW-_	ECX26K8AAW-_	XTAR050D00A_
	208	7-1/2	15	208		ECX26K1EAW-_	ECX26K4EAW-_	ECX26K8EAW-_	XTAR050D00E_
	230	10	20	240		ECX26K1BAW-_	ECX26K4BAW-_	ECX26K8BAW-_	XTAR050D00B_
	380	—	20	380/50 Hz		ECX26K1LAW-_	ECX26K4LAW-_	ECX26K8LAW-_	XTAR050D00L_
	460	—	40	480		ECX26K1CAW-_	ECX26K4CAW-_	ECX26K8CAW-_	XTAR050D00C_
	575	—	50	600		ECX26K1DAW-_	ECX26K4DAW-_	ECX26K8DAW-_	XTAR050D00D_
Frame L									
65	115	5	—	120	100A	ECX26L1AAW-_	ECX26L4AAW-_	ECX26L8AAW-_	XTAR065D00A_
	208	10	20	208		ECX26L1EAW-_	ECX26L4EAW-_	ECX26L8EAW-_	XTAR065D00E_
	230	15	25	240		ECX26L1BAW-_	ECX26L4BAW-_	ECX26L8BAW-_	XTAR065D00B_
	380	—	30	380/50 Hz		ECX26L1LAW-_	ECX26L4LAW-_	ECX26L8LAW-_	XTAR065D00L_
	460	—	50	480		ECX26L1CAW-_	ECX26L4CAW-_	ECX26L8CAW-_	XTAR065D00C_
	575	—	60	600		ECX26L1DAW-_	ECX26L4DAW-_	ECX26L8DAW-_	XTAR065D00D_
Frame M									
80	115	7-1/2	—	120	100A	ECX26M1AAG-_	ECX26M4AAG-_	ECX26M8AAG-_	XTAR080F00A_
	208	15	25	208		ECX26M1EAG-_	ECX26M4EAG-_	ECX26M8EAG-_	XTAR080F00E_
	230	15	30	240		ECX26M1BAG-_	ECX26M4BAG-_	ECX26M8BAG-_	XTAR080F00B_
	380	—	50	380/50 Hz		ECX26M1LAG-_	ECX26M4LAG-_	ECX26M8LAG-_	XTAR080F00L_
	460	—	60	480		ECX26M1CAG-_	ECX26M4CAG-_	ECX26M8CAG-_	XTAR080F00C_
	575	—	75	600		ECX26M1DAG-_	ECX26M4DAG-_	ECX26M8DAG-_	XTAR080F00D_
Frame N									
95	115	7-1/2	—	120	100A	ECX26N1AAG-_	ECX26N4AAG-_	ECX26N8AAG-_	XTAR095F00A_
	208	15	25	208		ECX26N1EAG-_	ECX26N4EAG-_	ECX26N8EAG-_	XTAR095F00E_
	230	15	40	240		ECX26N1BAG-_	ECX26N4BAG-_	ECX26N8BAG-_	XTAR095F00B_
	380	—	60	380/50 Hz		ECX26N1LAG-_	ECX26N4LAG-_	ECX26N8LAG-_	XTAR095F00L_
	460	—	75	480		ECX26N1CAG-_	ECX26N4CAG-_	ECX26N8CAG-_	XTAR095F00C_
	575	—	100	600		ECX26N1DAG-_	ECX26N4DAG-_	ECX26N8DAG-_	XTAR095F00D_
Frame P									
115	115	10	—	120	150A	ECX26P1AAH-_	ECX26P4AAH-_	ECX26P8AAH-_	XTAR115G00A_
	208	25	40	208		ECX26P1EAH-_	ECX26P4EAH-_	ECX26P8EAH-_	XTAR115G00E_
	230	25	50	240		ECX26P1BAH-_	ECX26P4BAH-_	ECX26P8BAH-_	XTAR115G00B_
	380	—	60	380/50 Hz		ECX26P1LAH-_	ECX26P4LAH-_	ECX26P8LAH-_	XTAR115G00L_
	460	—	100	480		ECX26P1CAH-_	ECX26P4CAH-_	ECX26P8CAH-_	XTAR115G00C_
	575	—	125	600		ECX26P1DAH-_	ECX26P4DAH-_	ECX26P8DAH-_	XTAR115G00D_

① 1 hp = 0.746 kW.
② Voltage is listed @ 60 Hz unless otherwise noted. Other voltages available upon request.
③ Select proper "XTOB" Overload Amperage range as per motor FLA, see **Table 4-2**.
④ These are the Catalog Numbers for Type 4X 304-Grade Stainless Steel, as indicated by the seventh digit **4**. Example: ECX26B4AAA-_. To order Type 4X 316-Grade Stainless Steel, change that digit to **9**. To order Type 4 Painted Steel, change that digit to **3**. To order Nonmetallic, change that digit to **5**. For details on these Alternate Enclosures, see **Tab 14**.
⑤ Contact factory for other voltage options.

Cover Control ..... **Page 4-4**
Wiring Diagrams ..... **Page 4-20**
Dimensions ..... **Page 15-5**
Accessories ..... **Page 16-23**
Modification Codes ..... **Page 16-40**
Technical Data ..... **Page 18-19**

Wiring Diagrams

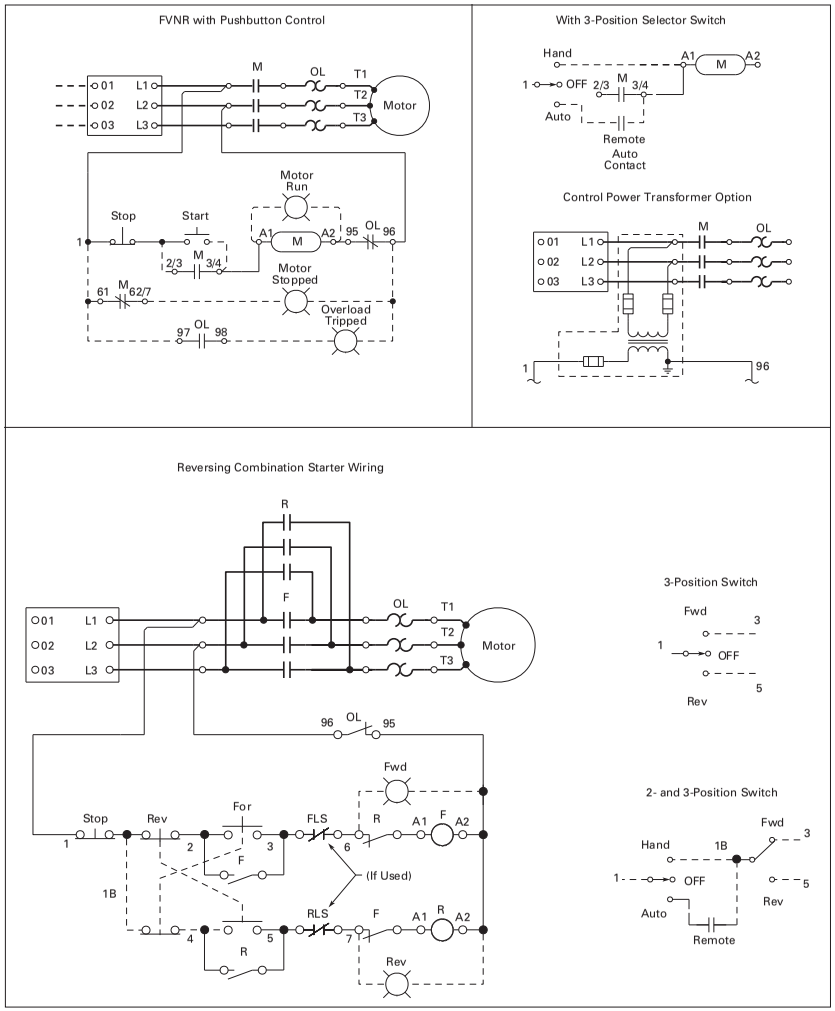

Figure 4-1. Typical Wiring Diagram

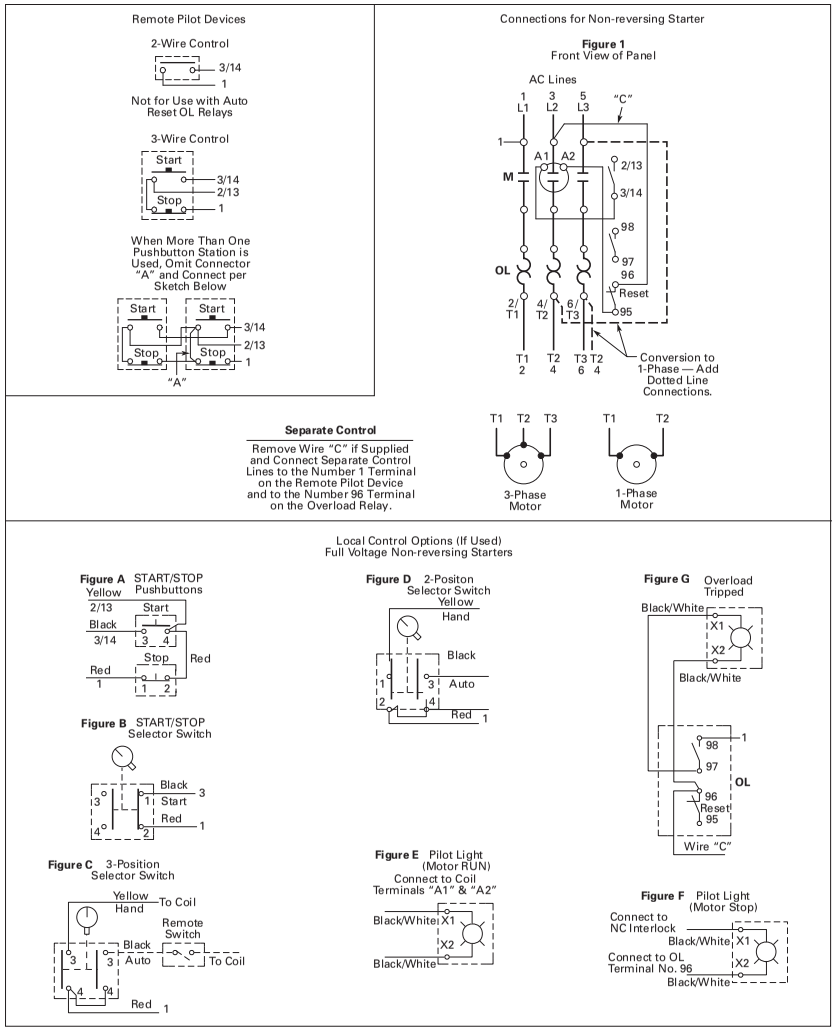

Figure 4-2. Typical Wiring Diagram — Non-combination Starters (Non-reversing)

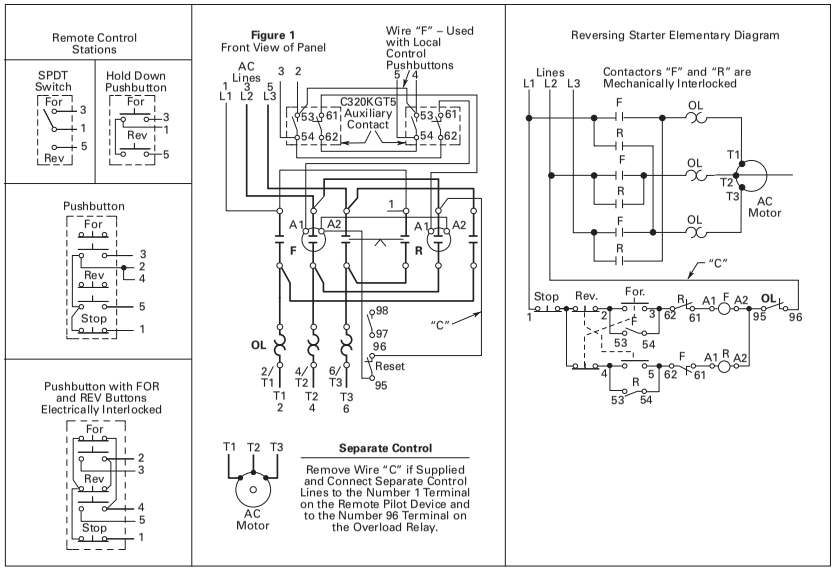

Figure 4-3. Typical Wiring Diagram — Non-combination Starters (Reversing)

Enclosed XT CMC

Product Description

Eaton's Cutler-Hammer® ***XT*** Line includes IEC Contactors, Starters and Combination Motor Controllers (CMCs). Designed to meet International Standards, the Enclosed Control ***XT*** Line (ECX) carries UL and cUL certifications.

Features and Benefits

- ON/OFF rotary handle with lockout provision
- Visible trip indication
- Test trip function
- Motor applications from 0.11A to 32A
- Class 10 overload protection
- Built-in heater and magnetic trip elements to protect the motor
- Phase loss sensitivity
- Type 2 coordination
- Ambient compensated up to 55°C [140°F]
- Control inputs located at front of starter for easy access and wiring
- Wide range of coils
- DIN Rail mount — XTSC...BB_
- Mounting plates — XTSC...BC_, XTSC...D motor controllers
- Adjustment dial for setting motor FLA
- Short circuit trip at 14 times the maximum setting of the FLA adjustment dial
- UL 508 Type F CMC High Fault Short Circuit Ratings: Refer to Manual Motor Protectors in **CA08102001E**.
- Nonmetallic and metallic enclosures in Types 1 (IP23), 4 (IP66), 4X (IP66) and 12 (IP65)
- Opaque (standard) or clear covers available on nonmetallic Halyester enclosure

Short Circuit Ratings

- 0 – 12A/B-frame MMP with B-frame contactor
  - 50K AIC @ 600V
- 13 – 32A/B-frame MMP with C-frame contactor
  - 18K AIC @ 600V

Standards and Certifications

Note: See **Page 18-2** for additional information on Standards and Certifications that apply to all Cutler-Hammer Enclosed Control products.

- UL Listed
- cUL Listed (indicates appropriate CSA Standard investigation)

Catalog Number Selection

Table 4-13. Combination Motor Controllers — Enclosed Control Catalog Numbering System

E C X 7 6 D 4 B A A -

Design
X = *XT* IEC

Class	Table
76 = Combination Motor Controller (CMC) — Non-reversing Starter	**4-17**
77 = Combination Motor Controller (CMC) — Non-reversing Starter with CPT	**4-18**
78 = Combination Motor Controller (CMC) — Reversing Starter	**4-19**

Frame Size
D = 12A
H = 32A

Enclosure Type/IP Ratings ①
1 = Type 1 — General Purpose
3 = Type 4 — Painted Steel
4 = Type 4X — Watertight (304-Grade SS)
5 = Type 4X — Watertight Nonmetallic
8 = Type 12 — Dust-Tight

Coil Voltage
A = 120V
B = 240V
C = 480V
D = 600V
E = 208V
L = 380V/50 Hz

Cover Control
See **Table 4-15**

Disconnect Ratings
A = None

MMP Overload Range
See **Table 4-14**

Modification Codes
See **Page 16-40**

① See **Table 1-2** on **Page 1-4** for Enclosure Type/IP Rating Cross-Reference.

Table 4-14. XTPR MMP Amperage Ranges

XT MMP Catalog Number	Overload Amp Range	Enclosed Control Suffix Code
Frame B Rotary MMP		
XTPRP16BC1	.1 – .16	**A**
XTPRP25BC1	.16 – .25	**B**
XTPRP40BC1	.25 – .4	**C**
XTPRP63BC1	.4 – .63	**D**
XTPR001BC1	.63 – 1	**E**
XTPR1P6BC1	1 – 1.6	**F**
XTPR2P5BC1	1.6 – 2.5	**G**
XTPR004BC1	2.5 – 4	**H**
XTPR6P3BC1	4 – 6.3	**J**
XTPR010BC1	6.3 – 10	**K**
XTPR012BC1	8 – 12.0	**L**
XTPR016BC1	10 – 16.0	**M**
XTPR020BC1	16 – 20	**N**
XTPR025BC1	20 – 25	**Q**
XTPR032BC1	25 – 32	**R**

Cover Control

- Cover control for Combination Motor Control Starters uses the 10250T (30 mm) family.
- E22 style cover control is an available option
- Selector switches are maintained with lever operators.
- Pushbuttons are momentary type with extended pushbutton.
- The kit includes hardware and connecting wires (where possible).
- For factory installed control devices other than shown below, refer to Modification Codes, **Page 16-40**.

Table 4-15. 10250T Style Combination Cover Control

Description	Factory Installed Flange Control	Field Installation Kits
	Position 9 Alpha	Combination Catalog Number
Non-reversing		
No Cover Mounted Pilot Devices	A	—
START/STOP Pushbuttons	B	C400T1
with Red RUN Pilot Light	C	—
with Red RUN/Green OFF Lights	D	—
ON/OFF Pushbuttons	E	C400T2
with Red RUN Pilot Light	F	—
with Red RUN/Green OFF Lights	G	—
HAND/OFF/AUTO Selector Switch	H	C400T12
with Red RUN Pilot Light	J	—
with Red RUN/Green OFF Lights	K	—
START Pushbutton	L	C400T3
ON Pushbutton	M	C400T4
OFF Pushbutton	N	C400T5
Red RUN Pilot Light	P	C400T9 ①
Green OFF	Q	C400T10 ①
Red RUN/Green OFF Pilot Lights	R	C400T11 ①
START/STOP Selector Switch	S	C400T13
with Red RUN Pilot Light	T	—
with Red RUN/Green OFF Lights	U	—
ON/OFF Selector Switch	V	C400T14
with Red RUN Pilot Light	W	—
with Red RUN/Green OFF Lights	X	—
Reversing		
No Cover Mounted Pilot Devices	A	—
FOR/REV/STOP Pushbuttons	B	C400T6
with 2 Red Pilot Lights	C	—
with 2 Red/1 Green Pilot Lights	D	—
UP/STOP/DOWN Pushbuttons	E	—
with 2 Red Pilot Lights	F	—
FOR/OFF/REV Selector Switch	H	C400T15
with 2 Red Pilot Lights	J	—
with 2 Red/1 Green Pilot Lights	K	—
Two Red Pilot Lights	P	②
One Green Pilot Light	Q	C400T10 ①
Two Red/One Green Pilot Lights	R	—
OPEN/OFF/CLOSE Selector Switch	V	C400T16
with 2 Red Pilot Lights	W	—
with 2 Red/1 Green Pilot Lights	X	—

① Add Code Letter from the table below to Catalog Number for voltage — Kits only. Example: C400T9**B**.

Rating	Code Letter	Rating	Code Letter	Rating	Code Letter
120V 60 Hz	A	240V 60 Hz	B	480V 60 Hz	C
208V 60 Hz	E	380V 50 Hz	L	600V 60 Hz	D

② Order Quantity (2) of **C400T10**.

Table 4-16. E22 Style Combination Motor Controller Cover Control

Description	Factory Installed ①	Field Kits
	Position 9 Cover Control Code	Combination Only Catalog Number
Non-reversing		
START/STOP Pushbuttons (PB)	B	CE400T01
START/STOP PB & Red RUN Light	C	CE400T02 ②
START/STOP PB, Red RUN, & Green STOPPED Light	D	CE400T03 ②
HAND/OFF/AUTO Selector Switch (SS)	H	CE400T04
H-O-A SS & Red RUN Light	J	CE400T05 ②
H-O-A SS, Red RUN, & Green STOPPED Light	K	CE400T06 ②
Red RUN Pilot Light	P	CE400T10 ②
Green Off Pilot Light	Q	CE400T11 ②
Red RUN/Green OFF Pilot Light	R	CE400T12 ②
ON/OFF Selector Switch (SS)	S	CE400T07
ON/OFF SS, Red RUN Light	T	CE400T08 ②
ON/OFF SS, Red RUN, & Green STOPPED Light	U	CE400T09 ②
Reversing		
FWD/REV/STOP Pushbuttons (PB)	B	CE400T50
FWD/REV/STOP PB + Red FWD & REV Lights	C	CE400T51 ②
FWD/REV/STOP PB, Red FWD/REV, & Green STOPPED	D	CE400T52 ②
FOR/OFF/REV Selector Switch (SS)	H	CE400T53
FOR/OFF/REV SS + Red FWD & REV Lights	J	CE400T54 ②
FOR/OFF/REV SS, Red FWD/REV, & Green STOPPED	K	CE400T55 ②
OPEN/OFF/CLOSE Selector Switch (SS)	V	CE400T56
OPEN/OFF/CLOSE SS + Red FWD & REV Lights	W	CE400T57 ②
OPEN/OFF/CLOSE SS, Red FWD/REV, & Green STOPPED	X	CE400T58 ②

① To include any of the above cover controls, place the control code character in position 9 of your Catalog Number and add Mod Code **P74**. Example: ECX77H1A**D**A-**P74**. Full voltage non-reversing fusible starter with interchangeable heater OLR and START/STOP pushbutton with red RUN and green OFF pilot lights.

② Suffix for lights (required for field installed kits only) in the table below:

Rating	Catalog Suffix	Rating	Catalog Suffix
120V 60 Hz	A	277V 60 Hz	H
208V 60 Hz	E	380V 50 Hz	L
240V 60 Hz	B	460V 60 Hz	C
		600V 60 Hz	D

Note: All CMC design built in enclosure Size 5 do not contain a CPT. In order to supply internal power for cover control, the enclosure must increase to Size 6. If control power is to be supplied from a source outside of the enclosure, there is no need to oversize. Note that 32A and less FVNR designs permit room for a 24V DC power supply to be installed.

Product Selection

Table 4-17. Class ECX76 — Combination Motor Controller (CMC) — Non-reversing Starter

Size	Amps	Maximum hp ①			Coil voltage @ 60 Hz ②	Type 1/IP23 General Purpose	Type 4X/IP66 ④⑤ Watertight	Component ③
		Motor Voltage	1-phase	3-phase		Catalog Number	Catalog Number	Catalog Number
D	12	115	1/2	—	120	ECX76D1AAA-_	ECX76D4AAA-_	XTPR_ _ _BC1
		208	1-1/2	3	208	ECX76D1EAA-_	ECX76D4EAA-_	
		230	2	3	240	ECX76D1BAA-_	ECX76D4BAA-_	
		380	—	5	380/50 Hz	ECX76D1LAA-_	ECX76D4LAA-_	
		460	—	7-1/2	480	ECX76D1CAA-_	ECX76D4CAA-_	
		575	—	10	600	ECX76D1DAA-_	ECX76D4DAA-_	
H	32	115	3	—	120	ECX76H1AAA-_	ECX76H4AAA-_	XTPR_ _ _BC1
		208	5	10	208	ECX76H1EAA-_	ECX76H4EAA-_	
		230	5	10	240	ECX76H1BAA-_	ECX76H4BAA-_	
		380	—	15	380/50 Hz	ECX76H1LAA-_	ECX76H4LAA-_	
		460	—	20	480	ECX76H1CAA-_	ECX76H4CAA-_	
		575	—	25	600	ECX76H1DAA-_	ECX76H4DAA-_	

① 1 hp = 0.746 kW.
② Voltage is listed @ 60 Hz unless otherwise noted. Other voltages available upon request.
③ Select proper "XTPR" MMP Overload Amperage range as per motor FLA, see **Page 4-24**.
④ These are the Catalog Numbers for Type 4X 304-Grade Stainless Steel, as indicated by the seventh digit **4**. Example: ECX76D**4**AAA-_. To order Type 4 Painted Steel, change that digit to **3**.
⑤ Handle mechanism is rated Type 1 or 12. Contact local sales office for availability of Type 4X versions.

Table 4-17. Class ECX76 — Combination Motor Controller (CMC) — Non-reversing Starter (Continued)

Size	Amps	Maximum hp ⑥			Coil voltage @ 60 Hz ⑦	Type 4X Nonmetallic/ IP66 ⑨ Watertight	Type 12/IP65 Dust-Tight	Component ⑧
		Motor Voltage	1-phase	3-phase		Catalog Number	Catalog Number	Catalog Number
D	12	115	1/2	—	120	ECX76D5AAA-_	ECX76D8AAA-_	XTPR_ _ _BC1
		208	1-1/2	3	208	ECX76D5EAA-_	ECX76D8EAA-_	
		230	2	3	240	ECX76D5BAA-_	ECX76D8BAA-_	
		380	—	5	380/50 Hz	ECX76D5LAA-_	ECX76D8LAA-_	
		460	—	7-1/2	480	ECX76D5CAA-_	ECX76D8CAA-_	
		575	—	10	600	ECX76D5DAA-_	ECX76D8DAA-_	
H	32	115	3	—	120	ECX76H5AAA-_	ECX76H8AAA-_	XTPR_ _ _BC1
		208	5	10	208	ECX76H5EAA-_	ECX76H8EAA-_	
		230	5	10	240	ECX76H5BAA-_	ECX76H8BAA-_	
		380	—	15	380/50 Hz	ECX76H5LAA-_	ECX76H8LAA-_	
		460	—	20	480	ECX76H5CAA-_	ECX76H8CAA-_	
		575	—	25	600	ECX76H5DAA-_	ECX76H8DAA-_	

⑥ 1 hp = 0.746 kW.
⑦ Voltage is listed @ 60 Hz unless otherwise noted. Other voltages available upon request.
⑧ Select proper "XTPR" MMP Overload Amperage range as per motor FLA, see **Page 4-24**.
⑨ Handle mechanism is rated Type 1 or 12. Contact local sales office for availability of Type 4X versions.

Cover Control ..... **Page 4-25**
Dimensions..... **Page 15-5**
Modifications Codes ..... **Page 16-40**
Technical Data, MMPs **CA08102001E**
Technical Data, Contactors ..... **Page 18-19**

Table 4-18. Class ECX77 — Combination Motor Controller (CMC) — Non-reversing Starter with CPT

Size	Amps	Maximum hp ①			Coil voltage @ 60 Hz ②	Type 1/IP23 General Purpose	Type 4X/IP66 ④⑤ Watertight	Component ③
		Motor Voltage	1-phase	3-phase		Catalog Number	Catalog Number	Catalog Number
D	12	115	1/2	—	120	ECX77D1AAA-_	ECX77D4AAA-_	XTPR_ _ _BC1
		208	1-1/2	3	208	ECX77D1EAA-_	ECX77D4EAA-_	
		230	2	3	240	ECX77D1BAA-_	ECX77D4BAA-_	
		380	—	5	380/50 Hz	ECX77D1LAA-_	ECX77D4LAA-_	
		460	—	7-1/2	480	ECX77D1CAA-_	ECX77D4CAA-_	
		575	—	10	600	ECX77D1DAA-_	ECX77D4DAA-_	
H	32	115	3	—	120	ECX77H1AAA-_	ECX77H4AAA-_	XTPR_ _ _BC1
		208	5	10	208	ECX77H1EAA-_	ECX77H4EAA-_	
		230	5	10	240	ECX77H1BAA-_	ECX77H4BAA-_	
		380	—	15	380/50 Hz	ECX77H1LAA-_	ECX77H4LAA-_	
		460	—	20	480	ECX77H1CAA-_	ECX77H4CAA-_	
		575	—	25	600	ECX77H1DAA-_	ECX77H4DAA-_	

① 1 hp = 0.746 kW.
② Voltage is listed @ 60 Hz unless otherwise noted. Other voltages available upon request.
③ Select proper "XTPR" MMP Overload Amperage range as per motor FLA, see **Page 4-24**.
④ These are the Catalog Numbers for Type 4X 304-Grade Stainless Steel, as indicated by the seventh digit **4**. Example: ECX77D**4**AAA-_. To order Type 4 Painted Steel, change that digit to **3**.
⑤ Handle mechanism is rated Type 1 or 12. Contact local sales office for availability of Type 4X versions.

Table 4-18. Class ECX77 — Combination Motor Controller (CMC) — Non-reversing Starter with CPT (Continued)

Size	Amps	Maximum hp ⑥			Coil voltage @ 60 Hz ⑦	Type 4X Nonmetallic/ IP66 ⑨ Watertight	Type 12/IP65 Dust-Tight	Component ⑧
		Motor Voltage	1-phase	3-phase		Catalog Number	Catalog Number	Catalog Number
D	12	115	1/2	—	120	ECX77D5AAA-_	ECX77D8AAA-_	XTPR_ _ _BC1
		208	1-1/2	3	208	ECX77D5EAA-_	ECX77D8EAA-_	
		230	2	3	240	ECX77D5BAA-_	ECX77D8BAA-_	
		380	—	5	380/50 Hz	ECX77D5LAA-_	ECX77D8LAA-_	
		460	—	7-1/2	480	ECX77D5CAA-_	ECX77D8CAA-_	
		575	—	10	600	ECX77D5DAA-_	ECX77D8DAA-_	
H	32	115	3	—	120	ECX77H5AAA-_	ECX77H8AAA-_	XTPR_ _ _BC1
		208	5	10	208	ECX77H5EAA-_	ECX77H8EAA-_	
		230	5	10	240	ECX77H5BAA-_	ECX77H8BAA-_	
		380	—	15	380/50 Hz	ECX77H5LAA-_	ECX77H8LAA-_	
		460	—	20	480	ECX77H5CAA-_	ECX77H8CAA-_	
		575	—	25	600	ECX77H5DAA-_	ECX77H8DAA-_	

⑥ 1 hp = 0.746 kW.
⑦ Voltage is listed @ 60 Hz unless otherwise noted. Other voltages available upon request.
⑧ Select proper "XTPR" MMP Overload Amperage range as per motor FLA, see **Page 4-24**.
⑨ Handle mechanism is rated Type 1 or 12. Contact local sales office for availability of Type 4X versions.

Cover Control ..... **Page 4-25**
Dimensions ..... **Page 15-5**
Modifications Codes..... **Page 16-40**
Technical Data, MMPs **CA08102001E**
Technical Data, Contactors ..... **Page 18-19**

Table 4-19. Class ECX78 — Combination Motor Controller (CMC) — Reversing Starter

Size	Amps	Maximum hp ①			Coil voltage @ 60 Hz ②	Type 1/IP23 General Purpose	Type 4X/IP66 ④⑤ Watertight	Component ③
		Motor Voltage	1-phase	3-phase		Catalog Number	Catalog Number	Catalog Number
D	12	115	1/2	—	120	ECX78D1AAA-_	ECX78D4AAA-_	XTPR_ _ _BC1
		208	1-1/2	3	208	ECX78D1EAA-_	ECX78D4EAA-_	
		230	2	3	240	ECX78D1BAA-_	ECX78D4BAA-_	
		380	—	5	380/50 Hz	ECX78D1LAA-_	ECX78D4LAA-_	
		460	—	7-1/2	480	ECX78D1CAA-_	ECX78D4CAA-_	
		575	—	10	600	ECX78D1DAA-_	ECX78D4DAA-_	
H	32	115	3	—	120	ECX78H1AAA-_	ECX78H4AAA-_	XTPR_ _ _BC1
		208	5	10	208	ECX78H1EAA-_	ECX78H4EAA-_	
		230	5	10	240	ECX78H1BAA-_	ECX78H4BAA-_	
		380	—	15	380/50 Hz	ECX78H1LAA-_	ECX78H4LAA-_	
		460	—	20	480	ECX78H1CAA-_	ECX78H4CAA-_	
		575	—	25	600	ECX78H1DAA-_	ECX78H4DAA-_	

① 1 hp = 0.746 kW.
② Voltage is listed @ 60 Hz unless otherwise noted. Other voltages available upon request.
③ Select proper "XTPR" MMP Overload Amperage range as per motor FLA, see **Page 4-24**.
④ These are the Catalog Numbers for Type 4X 304-Grade Stainless Steel, as indicated by the seventh digit **4**. Example: ECX78D**4**AAA-_. To order Type 4 Painted Steel, change that digit to **3**.
⑤ Handle mechanism is rated Type 1 or 12. Contact local sales office for availability of Type 4X versions.

Table 4-19. Class ECX78 — Combination Motor Controller (CMC) — Reversing Starter (Continued)

Size	Amps	Maximum hp ⑥			Coil voltage @ 60 Hz ⑦	Type 4X Nonmetallic/ IP66 ⑨ Watertight	Type 12/IP65 Dust-Tight	Component ⑧
		Motor Voltage	1-phase	3-phase		Catalog Number	Catalog Number	Catalog Number
D	12	115	1/2	—	120	ECX78D5AAA-_	ECX78D8AAA-_	XTPR_ _ _BC1
		208	1-1/2	3	208	ECX78D5EAA-_	ECX78D8EAA-_	
		230	2	3	240	ECX78D5BAA-_	ECX78D8BAA-_	
		380	—	5	380/50 Hz	ECX78D5LAA-_	ECX78D8LAA-_	
		460	—	7-1/2	480	ECX78D5CAA-_	ECX78D8CAA-_	
		575	—	10	600	ECX78D5DAA-_	ECX78D8DAA-_	
H	32	115	3	—	120	ECX78H5AAA-_	ECX78H8AAA-_	XTPR_ _ _BC1
		208	5	10	208	ECX78H5EAA-_	ECX78H8EAA-_	
		230	5	10	240	ECX78H5BAA-_	ECX78H8BAA-_	
		380	—	15	380/50 Hz	ECX78H5LAA-_	ECX78H8LAA-_	
		460	—	20	480	ECX78H5CAA-_	ECX78H8CAA-_	
		575	—	25	600	ECX78H5DAA-_	ECX78H8DAA-_	

⑥ 1 hp = 0.746 kW.
⑦ Voltage is listed @ 60 Hz unless otherwise noted. Other voltages available upon request.
⑧ Select proper "XTPR" MMP Overload Amperage range as per motor FLA, see **Page 4-24**.
⑨ Handle mechanism is rated Type 1 or 12. Contact local sales office for availability of Type 4X versions.

Cover Control . . . . . **Page 4-25**
Dimensions. . . . . **Page 15-5**
Modifications Codes . . . . . **Page 16-40**
Technical Data, MMPs **CA08102001E**
Technical Data, Contactors . . . . . **Page 18-19**

Lighting Contactors

Contents

Description *Page*

UL Rated AC Contactors
Product Family Overview
Product Description 5-2
Catalog Number Selection 5-3
Cover Control 5-4
Non-combination C30CN Electrically and Mechanically Held
Product Selection 5-5
Non-combination CN35 Electrically Held
Product Selection 5-6
Non-combination A202 Magnetically Latched
Product Selection 5-8
Combination Electrically Held and Magnetically Latched
Product Selection 5-10
Wiring Diagrams 5-11

Lighting Contactors

Product Description

Eaton's Cutler-Hammer® Lighting Contactors are designed to provide a safe, convenient means for local or remote switching of tungsten (incandescent filament) or ballast (fluorescent and mercury arc) lamp loads. They are also suitable for other loads such as low pressure and high pressure sodium lamp loads and other non-motor (resistive) loads. They are not recommended for most sign flashing loads.

These lighting contactors are designed to withstand the large initial inrush currents of tungsten lamp loads without contact welding. They are fully rated and do not require derating.

Application Description

Loads:

Ballast Lamps — Fluorescent, Mercury Vapor, Metal Halide Sodium Vapor, Quartz — 600V maximum.

Filament Lamps — Incandescent, Infrared, Heating — 480V maximum, line to line; 277V maximum line to neutral.

Resistance Heating — Radiant and convection heating, furnaces and ovens.

Standards and Certifications

Note: See **Page 18-2** for additional information on Standards and Certifications that apply to all Cutler-Hammer Enclosed Control products.

- UL Listed
- cUL Listed
- ABS Type Approved

Accessories

Auxiliary Contacts

C30CN Electrically Held Contactors — The base C30CN product line can accept up to four auxiliary contacts (2NO/2NC), which are mounted on the top of the unit. The auxiliary contacts, rated A600, are also suitable for use on low-level circuits down to 12V, 5 mA.

CN35 Electrically Held Contactors — Include a NO maintaining auxiliary contact mounted on the right side of the contactor. The 10 – 60A devices will accept additional auxiliary contacts on the top (front) and/or sides. The 100 – 400A sizes will accept side mounted auxiliaries only.

Mechanically Held and Magnetically Latched — Holding circuit auxiliary contact, if needed, is not included and should be added separately as an option.

Power Poles for C30CN

The C30CN can be configured with up to 12 poles (30A maximum per pole). Power poles are available in single or double pole designs and can be mounted to provide either normally open or normally closed operation with a maximum of 12 NO poles or 8 NC and 4 NO poles. Each pole is capable of accepting up to 8 AWG wire.

2-Wire or 3-Wire Control Module for C30CN

A mechanical latch with a 2- or 3-wire electronic control module delivers reliable performance and protection from such application abnormalities as line noise, leakage currents from controller outputs, or short repetitive commands burst from faulty controllers. For Enclosed Control, units come standard with 2-wire control.

IMPORTANT: Add the **C18** Modification code to get 3-wire control with the C30CN contactor.

Mechanically Held Kit for C30CN

A modification kit allows the conversion of an electrically held lighting contactor into a mechanically held contactor.

Coil Kits for C30CN

The C30CN line comes in a wide range of input voltages and with coils from 24V AC to 600V AC.

2-Wire Control Relay for A202

The 2-wire control relay is designed to field convert 3-wire magnetically latched lighting contactors to operate controls such as photocells and timers. Terminal blocks included for fast wiring installation.

Enclosed Lighting Contactors

Table 5-1. Type 1 2-Wire Control Relay

Description	Magnetic Coil Voltage	Type 1 Catalog Number	Type 3R Catalog Number
2-Wire Control Relay	120 208 240	**ECLC201A** **ECLC201E** **ECLC201B**	**ECLC202A** **ECLC202E** **ECLC202B**
	277 480	**ECLC201H** **ECLC201C**	**ECLC202H** **ECLC202C**

Catalog Number Selection

Table 5-2. Enclosed Lighting Contactor Catalog Numbering System

E C L 1 2 D 1 A 3 E - X

Design

L = CN35 or A202 Lighting Contactor
C = C30CN Lighting Contactor

Class	Table
03 = Non-combination Electrically Held Lighting Contactor	**5-4, 5-6**
04 = Non-combination Mechanically Held/ Magnetically Latched Lighting Contactor	**5-5, 5-7**
12 = Combination Electrically Held Lighting Contactor — Fusible Disconnect	**5-8**
13 = Combination Magnetically Latched Lighting Contactor — Fusible Disconnect	**5-8**
14 = Combination Electrically Held Lighting Contactor — Thermal Magnetic Circuit Breaker	**5-9**
15 = Combination Magnetically Latched Lighting Contactor — Thermal Magnetic Circuit Breaker	**5-9**

Ampere Size ②

A = 10A	**D** = 60A	**G** = 300A
B = 20A	**E** = 100A	**H** = 400A
C = 30A	**F** = 200A	**J** = 600A

Enclosure Types

1 = Type 1 — General Purpose
2 = Type 3R — Rainproof
3 = Type 4 — Watertight (Painted)
4 = Type 4X — Watertight (304-Grade Stainless Steel)
6 = Type 7/9 — Explosion Proof
8 = Type 12 — Dust-Tight
9 = Type 4X — Watertight (316-Grade Stainless Steel)

Modification Codes

(See **Page 5-4** and **Page 16-40**)

Disconnect Fuse Clip Ratings

A = None	**J** = 200A/600V R
B = 30A/250V R	**K** = 400A/250V R
C = 30A/600V R	**L** = 400A/600V R
D = 60A/250V R	**M** = 600A/250V R
E = 30A/600V R	**N** = 600A/600V R
F = 100A/250V R	**P** = 800A/600V R
G = 100A/600V R	**T** = By Description
H = 200A/250V R	

Thermal-Magnetic Breaker Ratings

A = None	**F** = 60A	**J** = 300A	**M** = 800A
D = 20A	**G** = 100A	**K** = 400A	**T** = By Description
E = 30A	**H** = 200A	**L** = 600A	

Number of Poles ①

1, 2, 3, 4, 5, 6, 7, 8, 9 = Poles Required
A = 10 Poles
B = 12 Poles
C = 20 Poles
Combination Devices = 3-Pole Only

Coil Voltage

A = 120/60 110/50	**K** = 240/50	**T** = 24/60
B = 240/60 220/50	**L** = 380/50	**U** = 24/50
C = 480/60 440/50	**M** = 415/50	**V** = 32/50
D = 600/60 550/50	**P** = 12V DC	**W** = 48/60
E = 208/60	**Q** = 24V DC	**X** = 104 – 120/60
G = 550/50	**R** = 48V DC	**Y** = 48/50
H = 277/60	**S** = 125V DC	**Z** = By Description
J = 208 – 240/60		

① For normally closed poles see **Page 16-43**.
② C30CN available in 30A only.

Enclosures

Lighting contactors are available open or mounted in Type 1, 3R, 4, 4X, 12 or 7/9 enclosures.

Type 1 is for indoor, general purpose for personal protection. Knock-outs are provided in the top and bottom for conduit entry.

Type 3R is for outdoor applications and rated for rain, sleet and external ice buildup. Type 3R enclosures have knockouts in the bottom and provisions for a hub in the top.

Type 4 and 4X are for mounting indoor or outdoor and provide protection from splashing water, hose-directed water and wind-blown dust. Watertight conduit hubs are provided in the top and bottom of Type 4X enclosures. The standard Type 4X enclosures are made of 304-Grade stainless steel, providing corrosion protection. 316-Grade stainless steel construction is available as an upgrade option.

Type 12 enclosures are for indoor mounting and protect from dripping liquids, falling dirt and dust. No knockouts or hubs are provided with Type 12 enclosures.

Type 1, 3R, 4 and 12 enclosures are painted with a polyester urethane powder coat paint meeting UL requirements and the color is ANSI 61 gray. Type 1 enclosures have knockouts for cover controls. All the other Types have holes plugged, ready for cover controls. Type 7/9 is also available for explosion proof applications. Please contact the factory for additional details.

Cover Control

Table 5-3. Cover Mounted Pilot Devices

Description	For use with Lighting Contactor	Factory Installed Cover Control		Field Installation Kits	
		Type 1, 3R, 4X & 12	Type 7/9	Type 1 ①⑤	Type 3R, 4X, 12 Combination & Non-combination ②⑥
		Modification Code Suffix	Modification Code Suffix	Catalog Number	Catalog Number
ON/OFF Pushbuttons with Red RUN Pilot Light with Red RUN/GREEN off lights	Electrical 3-wire C30CN; CN35; A202	**P8** **P8P23** **P8P23P25**	**P8** **P8P23** **P8P23P25**	**C400GK18** **C400GK19_** **C400GK1A_**	**C400T2** **—** **—**
ON/OFF Pushbuttons with Red RUN Pilot Light with Red RUN/GREEN off lights	Mechanical 3-wire C30CN	**P8** **P8P23** **P8P23P25**	**P8** **P8P23** **P8P23P25**	**C400GK4** **C400GK48_** **C400GK49_**	**C400T201** **—** **—**
ON/OFF Pushbuttons with Red RUN Pilot Light with Red RUN/GREEN off lights	Elec. & Mech. 2-wire C30CN; CN35; A202	**P8** **P8P23** **P8P23P25**	**P8** **P8P23** **P8P23P25**	**C400GK5** **C400GK52_** **C400GK55_**	**C400T14** ③ **—** **—**
Start/Stop Pushbuttons with Red RUN Pilot Light with Red RUN/GREEN off lights	Mechanical 3-wire C30CN	**P7** **P7P23** **P7P23P25**	**P7** **P7P23** **P7P23P25**	**C400GK7** **C400GK72_** **C400GK75_**	**C400T200** **—** **—**
Start/Stop Pushbuttons with Red RUN Pilot Light with Red RUN/GREEN off lights	Elec. & Mech. 2-wire C30CN	**P7** **P7P23** **P7P23P25**	**P7** **P7P23** **P7P23P25**	**C400GK6** **C400GK62_** **C400GK65_**	**C400T13** ③ **—** **—**
HAND/OFF/AUTO Cover Control with Red RUN Pilot Light with Red RUN/GREEN off lights	Elec. & Mech. 2-wire C30CN; CN35; A202	**S3** **S3P23** **S3P23P25**	**S3** ④ **S3P23** ④ **S3P23P25** ④	**C400GK3** **C400GK32_** **C400GK35_**	**C400T12** ③ **—** **—**
Red RUN Pilot Light Green OFF Pilot Light Red RUN/Green OFF Pilot Light	All	**P23** **P25** **P23P25**	**P23** **P25** **P23P25**	**C400GK42_** **C400GK41_** **C400GK46_**	**C400T9_** **C400T10_** **C400T11_**

① For use with Non-combination units (Box sizes 1 – 4).
② For use with Type 1 Combination units as well.
③ Selector Switch.
④ With 3-position selector switch, Mod **C20** (2-wire control relay) must be used with magnetically latched contactor (ECL04, ECL13, ECL15).
⑤ Add Code Letter from table below to Catalog Number for Voltage in place of _.

Rating	Code Letter	Rating	Code Letter
24V 60 Hz	**T**	277V 60 Hz	**H**
120V 60 Hz	**A**	380V 60 Hz	**L**
208V 60 Hz	**E**	480V 60 Hz	**C**
240V 60 Hz	**B**	600V 60 Hz	**D**

Product Selection

2-Wire and 3-Wire Control Wiring Options — 2-Wire Control Standard

Enclosed Electrically Held Lighting Contactor

Enclosed Mechanically Held Lighting Contactor

Table 5-4. Class ECC03 — Non-combination Electrically Held Lighting Contactor — 2 or 3-Wire Control

Number of Poles	Type 1	Type 3R	Type 4X ①	Type 7/9	Type 12	Component Contactor (Open)
	Catalog Number ②	Catalog Number ②	Catalog Number ②	Catalog Number ②	Catalog Number ②	Catalog Number ②
Continuous Amps – 30						
2	ECC03C1_2A	ECC03C2_2A	ECC03C4_2A	ECC03C6_2A	ECC03C8_2A	C30CNE20_0
3	ECC03C1_3A	ECC03C2_3A	ECC03C4_3A	ECC03C6_3A	ECC03C8_3A	C30CNE30_0
4	ECC03C1_4A	ECC03C2_4A	ECC03C4_4A	ECC03C6_4A	ECC03C8_4A	C30CNE40_0
5	ECC03C1_5A	ECC03C2_5A	ECC03C4_5A	ECC03C6_5A	ECC03C8_5A	C30CNE50_0
6	ECC03C1_6A	ECC03C2_6A	ECC03C4_6A	ECC03C6_6A	ECC03C8_6A	C30CNE60_0
7	ECC03C1_7A	ECC03C2_7A	ECC03C4_7A	ECC03C6_7A	ECC03C8_7A	C30CNE70_0
8	ECC03C1_8A	ECC03C2_8A	ECC03C4_8A	ECC03C6_8A	ECC03C8_8A	C30CNE80_0
9	ECC03C1_9A	ECC03C2_9A	ECC03C4_9A	ECC03C6_9A	ECC03C8_9A	C30CNE90_0
10	ECC03C1_AA	ECC03C2_AA	ECC03C4_AA	ECC03C6_AA	ECC03C8_AA	C30CNE100_0
12	ECC03C1_BA	ECC03C2_BA	ECC03C4_BA	ECC03C6_BA	ECC03C8_BA	C30CNE120_0

① These are the Catalog Numbers for Type 4X 304-Grade Stainless Steel, as indicated by the seventh digit **4**. Example: ECC03C4A2A. To order Type 4X 316-Grade Stainless Steel, change that digit to **9**. To order Type 4 Painted Steel, change that digit to **3**. To order Nonmetallic, change that digit to **5**. For details on these Alternate Enclosures, see **Tab 14**.

② For first open position (Coil Voltage), use the table below.

Suffix	Coil Voltage	Suffix	Coil Voltage	Suffix	Coil Voltage
A	120/60 or 110/50	D	600/60 or 550/50	T	24/60
B	240/60 or 220/50	E	208/60	V	28/60 or 24/50
C	480/60 or 440/50	H	277/60 or 240/50	X	347/60

Table 5-5. Class ECC04 — Non-combination Mechanically Held Lighting Contactor — 2-Wire Control ③

Number of Poles	Type 1	Type 3R	Type 4X ④	Type 7/9	Type 12	Component Contactor (Open)
	Catalog Number ⑤	Catalog Number ⑤	Catalog Number ⑤	Catalog Number ⑤	Catalog Number ⑤	Catalog Number ⑤
Continuous Amps – 30						
2	ECC04C1_2A	ECC04C2_2A	ECC04C4_2A	ECC04C6_2A	ECC04C8_2A	C30CNM20_
3	ECC04C1_3A	ECC04C2_3A	ECC04C4_3A	ECC04C6_3A	ECC04C8_3A	C30CNM30_
4	ECC04C1_4A	ECC04C2_4A	ECC04C4_4A	ECC04C6_4A	ECC04C8_4A	C30CNM40_
5	ECC04C1_5A	ECC04C2_5A	ECC04C4_5A	ECC04C6_5A	ECC04C8_5A	C30CNM50_
6	ECC04C1_6A	ECC04C2_6A	ECC04C4_6A	ECC04C6_6A	ECC04C8_6A	C30CNM60_
7	ECC04C1_7A	ECC04C2_7A	ECC04C4_7A	ECC04C6_7A	ECC04C8_7A	C30CNM70_
8	ECC04C1_8A	ECC04C2_8A	ECC04C4_8A	ECC04C6_8A	ECC04C8_8A	C30CNM80_
9	ECC04C1_9A	ECC04C2_9A	ECC04C4_9A	ECC04C6_9A	ECC04C8_9A	C30CNM90_
10	ECC04C1_AA	ECC04C2_AA	ECC04C4_AA	ECC04C6_AA	ECC04C8_AA	C30CNM100_
12	ECC04C1_BA	ECC04C2_BA	ECC04C4_BA	ECC04C6_BA	ECC04C8_BA	C30CNM120_

③ Add **C18** Modification Code for 3-wire control.

④ These are the Catalog Numbers for Type 4X 304-Grade Stainless Steel, as indicated by the seventh digit **4**. Example: ECC04C4A2A. To order Type 4X 316-Grade Stainless Steel, change that digit to **9**. To order Type 4 Painted Steel, change that digit to **3**. To order Nonmetallic, change that digit to **5**. For details on these Alternate Enclosures, see **Tab 14**.

⑤ For first open position (Coil Voltage), use the table below.

Suffix	Coil Voltage	Suffix	Coil Voltage	Suffix	Coil Voltage
A	120/60 or 110/50	D	600/60 or 550/50	T	24/60
B	240/60 or 220/50	E	208/60	V	28/60 or 24/50
C	480/60 or 440/50	H	277/60 or 240/50	X	347/60

Note: To get the C30CN Lighting Contactor with normally closed power poles, see **Page 16-43**, section L, for Modification Codes.

Accessories ..... **Pages 5-2, 16-30**
Cover Control ..... **Page 5-4**
Dimensions ..... **Page 15-5**
Modifications ..... **Page 16-40**
Technical Data ..... **Page 18-37**

Product Selection

Table 5-6. Class ECL03 — Non-combination Electrically Held Lighting Contactor

No. of Poles	Frame Size	Type 1 General Purpose	Type 3R Rainproof	Type 4X ② Watertight & Dust-Tight Stainless Steel	Type 7/9 Hazardous Location	Type 12 Dust-Tight Industrial	Component Contactor (Open)
		Catalog Number ③	Catalog Number ③	Catalog Number ③	Catalog Number ③	Catalog Number ③	Catalog Number ③
Maximum Ampere Rating — 10 ①							
2	45 mm	ECL03A1_2A	ECL03A2_2A	ECL03A4_2A	ECL03A6_2A	ECL03A8_2A	CN35AN2_B
3		ECL03A1_3A	ECL03A2_3A	ECL03A4_3A	ECL03A6_3A	ECL03A8_3A	CN35AN3_B
4		ECL03A1_4A	ECL03A2_4A	ECL03A4_4A	ECL03A6_4A	ECL03A8_4A	CN35AN4_B
5		ECL03A1_5A	ECL03A2_5A	ECL03A4_5A	ECL03A6_5A	ECL03A8_5A	—
6		ECL03A1_6A	ECL03A2_6A	ECL03A4_6A	ECL03A6_6A	ECL03A8_6A	—
9	45 mm	ECL03A1_9A	ECL03A2_9A	ECL03A4_9A	ECL03A6_9A	ECL03A8_9A	—
10		ECL03A1_AA	ECL03A2_AA	ECL03A4_AA	ECL03A6_AA	ECL03A8_AA	—
12		ECL03A1_BA	ECL03A2_BA	ECL03A4_BA	ECL03A6_BA	ECL03A8_BA	—
20		ECL03A1_CA	ECL03A2_CA	ECL03A4_CA	ECL03A6_CA	ECL03A8_CA	—
Maximum Ampere Rating — 20 ①							
2	45 mm	ECL03B1_2A	ECL03B2_2A	ECL03B4_2A	ECL03B6_2A	ECL03B8_2A	CN35BN2_B
3		ECL03B1_3A	ECL03B2_3A	ECL03B4_3A	ECL03B6_3A	ECL03B8_3A	CN35BN3_B
4		ECL03B1_4A	ECL03B2_4A	ECL03B4_4A	ECL03B6_4A	ECL03B8_4A	CN35BN4_B
5		ECL03B1_5A	ECL03B2_5A	ECL03B4_5A	ECL03B6_5A	ECL03B8_5A	—
6		ECL03B1_6A	ECL03B2_6A	ECL03B4_6A	ECL03B6_6A	ECL03B8_6A	CN35BN6_B
9	45 mm	ECL03B1_9A	ECL03B2_9A	ECL03B4_9A	ECL03B6_9A	ECL03B8_9A	CN35BN9_B
10		ECL03B1_AA	ECL03B2_AA	ECL03B4_AA	ECL03B6_AA	ECL03B8_AA	—
12		ECL03B1_BA	ECL03B2_BA	ECL03B4_BA	ECL03B6_BA	ECL03B8_BA	CN35BN12_B
20		ECL03B1_CA	ECL03B2_CA	ECL03B4_CA	ECL03B6_CA	ECL03B8_CA	—
Maximum Ampere Rating — 30 ①							
2	45 mm	ECL03C1_2A	ECL03C2_2A	ECL03C4_2A	ECL03C6_2A	ECL03C8_2A	CN35DN2_B
3		ECL03C1_3A	ECL03C2_3A	ECL03C4_3A	ECL03C6_3A	ECL03C8_3A	CN35DN3_B
4		ECL03C1_4A	ECL03C2_4A	ECL03C4_4A	ECL03C6_4A	ECL03C8_4A	CN35DN4_B
5		ECL03C1_5A	ECL03C2_5A	ECL03C4_5A	ECL03C6_5A	ECL03C8_5A	CN35DN5_B
6		ECL03C1_6A	ECL03C2_6A	ECL03C4_6A	ECL03C6_6A	ECL03C8_6A	CN35DN6_B
9	45 mm	ECL03C1_9A	ECL03C2_9A	ECL03C4_9A	ECL03C6_9A	ECL03C8_9A	CN35DN9_B
10		ECL03C1_AA	ECL03C2_AA	ECL03C4_AA	ECL03C6_AA	ECL03C8_AA	—
12		ECL03C1_BA	ECL03C2_BA	ECL03C4_BA	ECL03C6_BA	ECL03C8_BA	CN35DN12_B
20		ECL03C1_CA	ECL03C2_CA	ECL03C4_CA	ECL03C6_CA	ECL03C8_CA	—
Maximum Ampere Rating — 60 ①							
2	65 mm	ECL03D1_2A	ECL03D2_2A	ECL03D4_2A	ECL03D6_2A	ECL03D8_2A	CN35GN2_B
3		ECL03D1_3A	ECL03D2_3A	ECL03D4_3A	ECL03D6_3A	ECL03D8_3A	CN35GN3_B
4		ECL03D1_4A	ECL03D2_4A	ECL03D4_4A	ECL03D6_4A	ECL03D8_4A	CN35GN4_B
5		ECL03D1_5A	ECL03D2_5A	ECL03D4_5A	ECL03D6_5A	ECL03D8_5A	CN35GN5_B
6	65 mm	ECL03D1_6A	ECL03D2_6A	ECL03D4_6A	ECL03D6_6A	ECL03D8_6A	—
9		ECL03D1_9A	ECL03D2_9A	ECL03D4_9A	ECL03D6_9A	ECL03D8_9A	—
10		ECL03D1_AA	ECL03D2_AA	ECL03D4_AA	ECL03D6_AA	ECL03D8_AA	—
12		ECL03D1_BA	ECL03D2_BA	ECL03D4_BA	ECL03D6_BA	ECL03D8_BA	—

① Ampere ratings are based on a maximum load voltage of 480V for tungsten lamp applications and 600V for ballast or mercury vapor type applications.

② These are the Catalog Numbers for Type 4X 304-Grade Stainless Steel, as indicated by the seventh digit **4**. Example: ECL03B4A2A. To order Type 4X 316-Grade Stainless Steel, change that digit to **9**. To order Type 4 Painted Steel, change that digit to **3**. To order Nonmetallic, change that digit to **5**. For details on these Alternate Enclosures, see **Tab 14**.

③ For open position (Coil Voltage), use the table below:

Suffix	Coil Voltage
A	120/60 or 110/50
B	240/60 or 220/50
C	480/60 or 440/50
D	600/60 or 550/50
E	208/60
H	277/60

Type 1 Electrically Held 4-Pole Lighting Contactor

Cover Control ..... **Page 5-4**
Dimensions ..... **Page 15-5**
Accessories ..... **Page 16-30**
Modifications ..... **Page 16-40**

Table 5-6. Class ECL03 — Non-combination Electrically Held Lighting Contactor (Continued)

No. of Poles	Frame Size	Type 1 General Purpose	Type 3R Rainproof	Type 4X ③ Watertight & Dust-Tight Stainless Steel	Type 7/9 Hazardous Location	Type 12 Dust-Tight Industrial	Component Contactor (Open)
		Catalog Number ④	Catalog Number ④	Catalog Number ④	Catalog Number ④	Catalog Number ④	Catalog Number ④
Maximum Ampere Rating — 100 ①							
2	90 mm	ECL03E1_2A	ECL03E2_2A	ECL03E4_2A	ECL03E6_2A	ECL03E8_2A	CN35KN2_
3		ECL03E1_3A	ECL03E2_3A	ECL03E4_3A	ECL03E6_3A	ECL03E8_3A	CN35KN3_
4		ECL03E1_4A	ECL03E2_4A	ECL03E4_4A	ECL03E6_4A	ECL03E8_4A	—
5	90 mm	ECL03E1_5A	ECL03E2_5A	ECL03E4_5A	ECL03E6_5A	ECL03E8_5A	—
6		ECL03E1_6A	ECL03E2_6A	ECL03E4_6A	ECL03E6_6A	ECL03E8_6A	—
9		ECL03E1_9A	ECL03E2_9A	ECL03E4_9A	ECL03E6_9A	ECL03E8_9A	—
Maximum Ampere Rating — 200 ①							
2	180 mm	ECL03F1_2A	ECL03F2_2A	ECL03F4_2A	ECL03F6_2A	ECL03F8_2A	CN35NN2_
3		ECL03F1_3A	ECL03F2_3A	ECL03F4_3A	ECL03F6_3A	ECL03F8_3A	CN35NN3_
4		ECL03F1_4A	ECL03F2_4A	ECL03F4_4A	ECL03F6_4A	ECL03F8_4A	—
5	180 mm	ECL03F1_5A	ECL03F2_5A	ECL03F4_5A	ECL03F6_5A	ECL03F8_5A	—
6		ECL03F1_6A	ECL03F2_6A	ECL03F4_6A	ECL03F6_6A	ECL03F8_6A	—
Maximum Ampere Rating — 300 ①							
2	180 mm	ECL03G1_2A	ECL03G2_2A	ECL03G4_2A	ECL03G6_2A	ECL03G8_2A	CN35SN2_
3		ECL03G1_3A	ECL03G2_3A	ECL03G4_3A	ECL03G6_3A	ECL03G8_3A	CN35SN3_
4		ECL03G1_4A	ECL03G2_4A	ECL03G4_4A	ECL03G6_4A	ECL03G8_4A	—
5	180 mm	ECL03G1_5A	ECL03G2_5A	ECL03G4_5A	ECL03G6_5A	ECL03G8_5A	—
6		ECL03G1_6A	ECL03G2_6A	ECL03G4_6A	ECL03G6_6A	ECL03G8_6A	—
Maximum Ampere Rating — 400 ①②							
2	220 mm	ECL03H1_2A	ECL03H2_2A	ECL03H4_2A	ECL03H6_2A	ECL03H8_2A	CN35TN2_
3		ECL03H1_3A	ECL03H2_3A	ECL03H4_3A	ECL03H6_3A	ECL03H8_3A	CN35TN3_

① Ampere ratings are based on a maximum load voltage of 480V for tungsten lamp applications and 600V for ballast or mercury vapor type applications.

② UL ballast and resistive ratings only.

③ These are the Catalog Numbers for Type 4X 304-Grade Stainless Steel, as indicated by the seventh digit **4**. Example: ECL03B4A2A. To order Type 4X 316-Grade Stainless Steel, change that digit to **9**. To order Type 4 Painted Steel, change that digit to **3**. To order Nonmetallic, change that digit to **5**. For details on these Alternate Enclosures, see **Tab 14**.

④ For open position (Coil Voltage), use the table below:

Suffix	Coil Voltage
A	120/60 or 110/50
B	240/60 or 220/50
C	480/60 or 440/50
D	600/60 or 550/50
E	208/60
H	277/60

Cover Control ..... **Page 5-4**
Dimensions ..... **Page 15-5**
Accessories ..... **Page 16-30**
Modifications ..... **Page 16-40**

Operation

A permanent magnet is built into the contactor structure that will maintain the contactor in its energized state indefinitely without using control power. When energized, a DC current is applied to the latch coil, producing a magnetic field that reinforces the polarity of the permanent magnet, pulling in the contactor. The current to the coil is disconnected by the coil clearing interlock. In order to drop out the contactor, it is necessary to apply a field through the STOP coil in the reverse direction to the permanent magnet. This momentarily cancels the magnetic attraction and the contactor drops out.

5

Product Selection

Table 5-7. Class ECL04 — Non-combination Magnetically Latched Lighting Contactor

No. of Poles	Type 1 General Purpose	Type 3R Rainproof	Type 4X ② Watertight & Dust-Tight Stainless Steel	Type 7/9 Hazardous Location	Type 12 Dust-Tight Industrial	Component Contactor (Open)
	Catalog Number ③	Catalog Number ③	Catalog Number ③	Catalog Number ③	Catalog Number ③	Catalog Number ③
Maximum Ampere Rating — 30 ①						
2	ECL04C1_2A	ECL04C2_2A	ECL04C4_2A	ECL04C6_2A	ECL04C8_2A	A202K1B_M
3	ECL04C1_3A	ECL04C2_3A	ECL04C4_3A	ECL04C6_3A	ECL04C8_3A	A202K1C_M
4	ECL04C1_4A	ECL04C2_4A	ECL04C4_4A	ECL04C6_4A	ECL04C8_4A	A202K1D_M
5	ECL04C1_5A	ECL04C2_5A	ECL04C4_5A	ECL04C6_5A	ECL04C8_5A	A202K1E_M
6	ECL04C1_6A	ECL04C2_6A	ECL04C4_6A	ECL04C6_6A	ECL04C8_6A	A202K1F_M
8	ECL04C1_8A	ECL04C2_8A	ECL04C4_8A	ECL04C6_8A	ECL04C8_8A	A202K1G_M
9	ECL04C1_9A	ECL04C2_9A	ECL04C4_9A	ECL04C6_9A	ECL04C8_9A	—
10	ECL04C1_AA	ECL04C2_AA	ECL04C4_AA	ECL04C6_AA	ECL04C8_AA	A202K1H_M
12	ECL04C1_BA	ECL04C2_BA	ECL04C4_BA	ECL04C6_BA	ECL04C8_BA	A202K1K_M
20	ECL04C1_CA	ECL04C2_CA	ECL04C4_CA	ECL04C6_CA	ECL04C8_CA	—
Maximum Ampere Rating — 60 ①						
2	ECL04D1_2A	ECL04D2_2A	ECL04D4_2A	ECL04D6_2A	ECL04D8_2A	A202K2B_M
3	ECL04D1_3A	ECL04D2_3A	ECL04D4_3A	ECL04D6_3A	ECL04D8_3A	A202K2C_M
4	ECL04D1_4A	ECL04D2_4A	ECL04D4_4A	ECL04D6_4A	ECL04D8_4A	A202K2D_M
5	ECL04D1_5A	ECL04D2_5A	ECL04D4_5A	ECL04D6_5A	ECL04D8_5A	A202K2E_M
6	ECL04D1_6A	ECL04D2_6A	ECL04D4_6A	ECL04D6_6A	ECL04D8_6A	A202K2F_M
8	ECL04D1_8A	ECL04D2_8A	ECL04D4_8A	ECL04D6_8A	ECL04D8_8A	A202K2G_M
9	ECL04D1_9A	ECL04D2_9A	ECL04D4_9A	ECL04D6_9A	ECL04D8_9A	—
10	ECL04D1_AA	ECL04D2_AA	ECL04D4_AA	ECL04D6_AA	ECL04D8_AA	A202K2H_M
12	ECL04D1_BA	ECL04D2_BA	ECL04D4_BA	ECL04D6_BA	ECL04D8_BA	A202K2K_M
20	ECL04D1_CA	ECL04D2_CA	ECL04D4_CA	ECL04D6_CA	ECL04D8_CA	—
Maximum Ampere Rating — 100 ①						
2	ECL04E1_2A	ECL04E2_2A	ECL04E4_2A	ECL04E6_2A	ECL04E8_2A	A202K3B_M
3	ECL04E1_3A	ECL04E2_3A	ECL04E4_3A	ECL04E6_3A	ECL04E8_3A	A202K3C_M
4	ECL04E1_4A	ECL04E2_4A	ECL04E4_4A	ECL04E6_4A	ECL04E8_4A	A202K3D_M
5	ECL04E1_5A	ECL04E2_5A	ECL04E4_5A	ECL04E6_5A	ECL04E8_5A	A202K3E_M
6	ECL04E1_6A	ECL04E2_6A	ECL04E4_6A	ECL04E6_6A	ECL04E8_6A	A202K3F_M
8	ECL04E1_8A	ECL04E2_8A	ECL04E4_8A	ECL04E6_8A	ECL04E8_8A	A202K3G_M
9	ECL04E1_9A	ECL04E2_9A	ECL04E4_9A	ECL04E6_9A	ECL04E8_9A	—
10	ECL04E1_AA	ECL04E2_AA	ECL04E4_AA	ECL04E6_AA	ECL04E8_AA	A202K3H_M
12	ECL04E1_BA	ECL04E2_BA	ECL04E4_BA	ECL04E6_BA	ECL04E8_BA	A202K3K_M
20	ECL04E1_CA	ECL04E2_CA	ECL04E4_CA	ECL04E6_CA	ECL04E8_CA	—

① Ampere ratings are based on a maximum load voltage of 480V for tungsten lamp applications and 600V for ballast or mercury vapor type applications.

Type 1 Non-combination Magnetically Latched Lighting Contactor

② These are the Catalog Numbers for Type 4X 304-Grade Stainless Steel, as indicated by the seventh digit **4**. Example: ECL04C4A2A. To order Type 4X 316-Grade Stainless Steel, change that digit to **9**. To order Type 4 Painted Steel, change that digit to **3**. To order Nonmetallic, change that digit to **5**. For details on these Alternate Enclosures, see **Tab 14**.

③ For open position (Coil Voltage), use the table below:

Enclosed Suffix	Open Suffix	Coil Voltage
A	A	120/60 or 110/50
B	W	240/60 or 220/50
C	X	480/60 or 440/50
D	E	600/60
E	B	208/60
H	Z	277/60

Accessories ..... **Pages 5-2, 16-34**
Cover Control ..... **Page 5-4**
Dimensions ..... **Page 15-5**
Modifications ..... **Page 16-40**
Technical Data ..... **Page 18-37**

Table 5-7. Class ECL04 — Non-combination Magnetically Latched Lighting Contactor (Continued)

No. of Poles	Type 1 General Purpose	Type 3R Rainproof	Type 4X ② Watertight & Dust-Tight Stainless Steel	Type 7/9 Hazardous Location	Type 12 Dust-Tight Industrial	Component Contactor (Open)
	Catalog Number ③	Catalog Number ③	Catalog Number ③	Catalog Number ③	Catalog Number ③	Catalog Number ③
Maximum Ampere Rating — 200 ①						
2	ECL04F1_2A	ECL04F2_2A	ECL04F4_2A	ECL04F6_2A	ECL04F8_2A	A202K4B_M
3	ECL04F1_3A	ECL04F2_3A	ECL04F4_3A	ECL04F6_3A	ECL04F8_3A	A202K4C_M
4	ECL04F1_4A	ECL04F2_4A	ECL04F4_4A	ECL04F6_4A	ECL04F8_4A	A202K4D_M
5	ECL04F1_5A	ECL04F2_5A	ECL04F4_5A	ECL04F6_5A	ECL04F8_5A	A202K4E_M
6	ECL04F1_6A	ECL04F2_6A	ECL04F4_6A	ECL04F6_6A	ECL04F8_6A	A202K4F_M
8	ECL04F1_8A	ECL04F2_8A	ECL04F4_8A	ECL04F6_8A	ECL04F8_8A	A202K4G_M
9	ECL04F1_9A	ECL04F2_9A	ECL04F4_9A	ECL04F6_9A	ECL04F8_9A	—
10	ECL04F1_AA	ECL04F2_AA	ECL04F4_AA	ECL04F6_AA	ECL04F8_AA	A202K4H_M
12	ECL04F1_BA	ECL04F2_BA	ECL04F4_BA	ECL04F6_BA	ECL04F8_BA	A202K4K_M
20	ECL04F1_CA	ECL04F2_CA	ECL04F4_CA	ECL04F6_CA	ECL04F8_CA	—
Maximum Ampere Rating — 300 ①						
2	ECL04G1_2A	ECL04G2_2A	ECL04G4_2A	ECL04G6_2A	ECL04G8_2A	A202K5B_M
3	ECL04G1_3A	ECL04G2_3A	ECL04G4_3A	ECL04G6_3A	ECL04G8_3A	A202K5C_M
4	ECL04G1_4A	ECL04G2_4A	ECL04G4_4A	ECL04G6_4A	ECL04G8_4A	—
5	ECL04G1_5A	ECL04G2_5A	ECL04G4_5A	ECL04G6_5A	ECL04G8_5A	—
6	ECL04G1_6A	ECL04G2_6A	ECL04G4_6A	ECL04G6_6A	ECL04G8_6A	—
Maximum Ampere Rating — 400 ①						
2	ECL04H1_2A	ECL04H2_2A	ECL04H4_2A	ECL04H6_2A	ECL04H8_2A	A202K6B_M
3	ECL04H1_3A	ECL04H2_3A	ECL04H4_3A	ECL04H6_3A	ECL04H8_3A	A202K6C_M
4	ECL04H1_4A	ECL04H2_4A	ECL04H4_4A	ECL04H6_4A	ECL04H8_4A	—
5	ECL04H1_5A	ECL04H2_5A	ECL04H4_5A	ECL04H6_5A	ECL04H8_5A	—
6	ECL04H1_6A	ECL04H2_6A	ECL04H4_6A	ECL04H6_6A	ECL04H8_6A	—

① Ampere ratings are based on a maximum load voltage of 480V for tungsten lamp applications and 600V for ballast or mercury vapor type applications.

② These are the Catalog Numbers for Type 4X 304-Grade Stainless Steel, as indicated by the seventh digit **4**. Example: ECL04C4A2A. To order Type 4X 316-Grade Stainless Steel, change that digit to **9**. To order Type 4 Painted Steel, change that digit to **3**. To order Nonmetallic, change that digit to **5**. For details on these Alternate Enclosures, see **Tab 14**.

③ For open position (Coil Voltage), use the table below:

Enclosed Suffix	Open Suffix	Coil Voltage
A	A	120/60 or 110/50
B	W	240/60 or 220/50
C	X	480/60 or 440/50
D	E	600/60
E	B	208/60
H	Z	277/60

Accessories ..... **Pages 5-2, 16-34**
Cover Control ..... **Page 5-4**
Dimensions ..... **Page 15-5**
Modifications ..... **Page 16-40**
Technical Data ..... **Page 18-37**

Product Selection

Table 5-8. Class ECL12 & ECL13 — Combination Lighting Contactor — Fusible Disconnect

Max. Amp Rating ①	No. of Poles	Fuse Clips Amps/Volts ③	Type 1 General Purpose	Type 3R Rainproof	Type 4X Watertight & Dust-Tight SS	Type 7/9 Hazardous Location	Type 12 Dust-Tight Industrial	Component Contactor (Open)
			Catalog Number ②	Catalog Number ②	Catalog Number ②	Catalog Number ②	Catalog Number ②	Catalog Number ②
Electrically Held — Class ECL12								
30	3	30/250V 30/600V	ECL12C1_3B ECL12C1_3C	ECL12C2_3B ECL12C2_3C	ECL12C4_3B ECL12C4_3C	ECL12C6_3B ECL12C6_3C	ECL12C8_3B ECL12C8_3C	CN35DN3_B
60	3	60/250V 60/600V	ECL12D1_3D ECL12D1_3E	ECL12D2_3D ECL12D2_3E	ECL12D4_3D ECL12D4_3E	ECL12D6_3D ECL12D6_3E	ECL12D8_3D ECL12D8_3E	CN35GN3_B
100	3	100/250V 100/600V	ECL12E1_3F ECL12E1_3G	ECL12E2_3F ECL12E2_3G	ECL12E4_3F ECL12E4_3G	ECL12E6_3F ECL12E6_3G	ECL12E8_3F ECL12E8_3G	CN35KN3_
200	3	200/250V 200/600V	ECL12F1_3H ECL12F1_3J	ECL12F2_3H ECL12F2_3J	ECL12F4_3H ECL12F4_3J	ECL12F6_3H ECL12F6_3J	ECL12F8_3H ECL12F8_3J	CN35NN3_
300	3	400/250V 400/600V	ECL12G1_3K ECL12G1_3L	ECL12G2_3K ECL12G2_3L	ECL12G4_3K ECL12G4_3L	ECL12G6_3K ECL12G6_3L	ECL12G8_3K ECL12G8_3L	CN35SN3_
400	3	400/250V 400/600V	ECL12H1_3K ECL12H1_3L	ECL12H2_3K ECL12H2_3L	ECL12H4_3K ECL12H4_3L	ECL12H6_3K ECL12H6_3L	ECL12H8_3K ECL12H8_3L	CN35TN3_
Magnetically Latched — Class ECL13								
30	3	30/250V 30/600V	ECL13C1_3B ECL13C1_3C	ECL13C2_3B ECL13C2_3C	ECL13C4_3B ECL13C4_3C	ECL13C6_3B ECL13C6_3C	ECL13C8_3B ECL13C8_3C	A202K1C_M
60	3	60/250V 60/600V	ECL13D1_3D ECL13D1_3E	ECL13D2_3D ECL13D2_3E	ECL13D4_3D ECL13D4_3E	ECL13D6_3D ECL13D6_3E	ECL13D8_3D ECL13D8_3E	A202K2C_M
100	3	100/250V 100/600V	ECL13E1_3F ECL13E1_3G	ECL13E2_3F ECL13E2_3G	ECL13E4_3F ECL13E4_3G	ECL13E6_3F ECL13E6_3G	ECL13E8_3F ECL13E8_3G	A202K3C_M
200	3	200/250V 200/600V	ECL13F1_3H ECL13F1_3J	ECL13F2_3H ECL13F2_3J	ECL13F4_3H ECL13F4_3J	ECL13F6_3H ECL13F6_3J	ECL13F8_3H ECL13F8_3J	A202K4C_M

① The listed ampere ratings are based on a maximum load voltage of 480V for tungsten lamp applications and 600V for ballasts or mercury vapor type applications.

② The underscore (_) indicates missing Code letter for Coil Selection — see **Table 5-10**. Example: Magnet coils with 120/110V coils — change 8th character to **A**. ECL12C1**A**3B.

③ Power fuses are not included.

Table 5-9. Class ECL14 & ECL15 — Combination Lighting Contactor — Thermal Magnetic Circuit Breaker

Max. Amp Rating ④	No. of Poles	Continuous Ampere Rating @ 40 °C	Type 1 General Purpose	Type 3R Rainproof	Type 4X Watertight & Dust-Tight SS	Type 7/9 Hazardous Location	Type 12 Dust-Tight Industrial	Component Contactor (Open)
			Catalog Number ⑤	Catalog Number ⑤	Catalog Number ⑤	Catalog Number ⑤	Catalog Number ⑤	Catalog Number ⑤
Electrically Held — Class ECL14								
30 60 100	3	30 60 100	ECL14C1_3E ECL14D1_3F ECL14E1_3G	ECL14C2_3E ECL14D2_3F ECL14E2_3G	ECL14C4_3E ECL14D4_3F ECL14E4_3G	ECL14C6_3E ECL14D6_3F ECL14E6_3G	ECL14C8_3E ECL14D8_3F ECL14E8_3G	CN35DN3_B CN35GN3_B CN35KN3_
200 300 400	3	200 300 400	ECL14F1_3H ECL14G1_3J ECL14H1_3K	ECL14F2_3H ECL14G2_3J ECL14H2_3K	ECL14F4_3H ECL14G4_3J ECL14H4_3K	ECL14F6_3H ECL14G6_3J ECL14H6_3K	ECL14F8_3H ECL14G8_3J ECL14H8_3K	CN35NN3_ CN35SN3_ CN35TN3_
Magnetically Latched — Class ECL15								
30 60 100 200	3	30 60 100 200	ECL15C1_3E ECL15D1_3F ECL15E1_3G ECL15F1_3H	ECL15C2_3E ECL15D2_3F ECL15E2_3G ECL15F2_3H	ECL15C4_3E ECL15D4_3F ECL15E4_3G ECL15F4_3H	ECL15C6_3E ECL15D6_3F ECL15E6_3G ECL15F6_3H	ECL15C8_3E ECL15D8_3F ECL15E8_3G ECL15F8_3H	A202K1C_M A202K2C_M A202K3C_M A202K4C_M

④ The listed ampere ratings are based on a maximum load voltage of 480V for tungsten lamp applications and 600V for ballasts or mercury vapor type applications.

⑤ The underscore (_) indicates missing Code letter for Coil Selection — see **Table 5-10**. Example: Magnet coils with 120/110V coils — change 8th character to **A**. ECL12C1**A**3B.

Table 5-10. Coil Voltage

Rating	Code Letter	Rating	Code Letter	Rating	Code Letter
120V 60 Hz 208V 60 Hz	A E	240V 60 Hz 277V 60 Hz	B H	480V 60 Hz 600V 60 Hz	C D

Additional Common Modifications are available for outside lighting for ballfields, parks, etc.:

- **E7** — Service Entrance
- **E5** — Enclosure with pole mounting brackets
- **P70** — Photocell
- **T1 – T25** — Timers

See **Page 16-40** for details.

Note: The Catalog Numbers listed in the Type 4X column are for Type 4X 304-Grade Stainless Steel, as indicated by the seventh digit **4**. Example: ECL12C4A3B. To order Type 4X 316-Grade Stainless Steel, change that digit to **9**. To order Type 4 Painted Steel, change that digit to **3**. To order Nonmetallic, change that digit to **5**. For details on these Alternate Enclosures, see **Tab 14**.

Accessories —
Magnetically Held ..... **Page 5-2, Page 16-34**
Cover Control ..... **Page 5-4**
Dimensions ..... **Page 15-5**
Accessories —
Electrically Held ..... **Page 16-30**
Modifications ..... **Page 16-40**

Wiring Diagrams

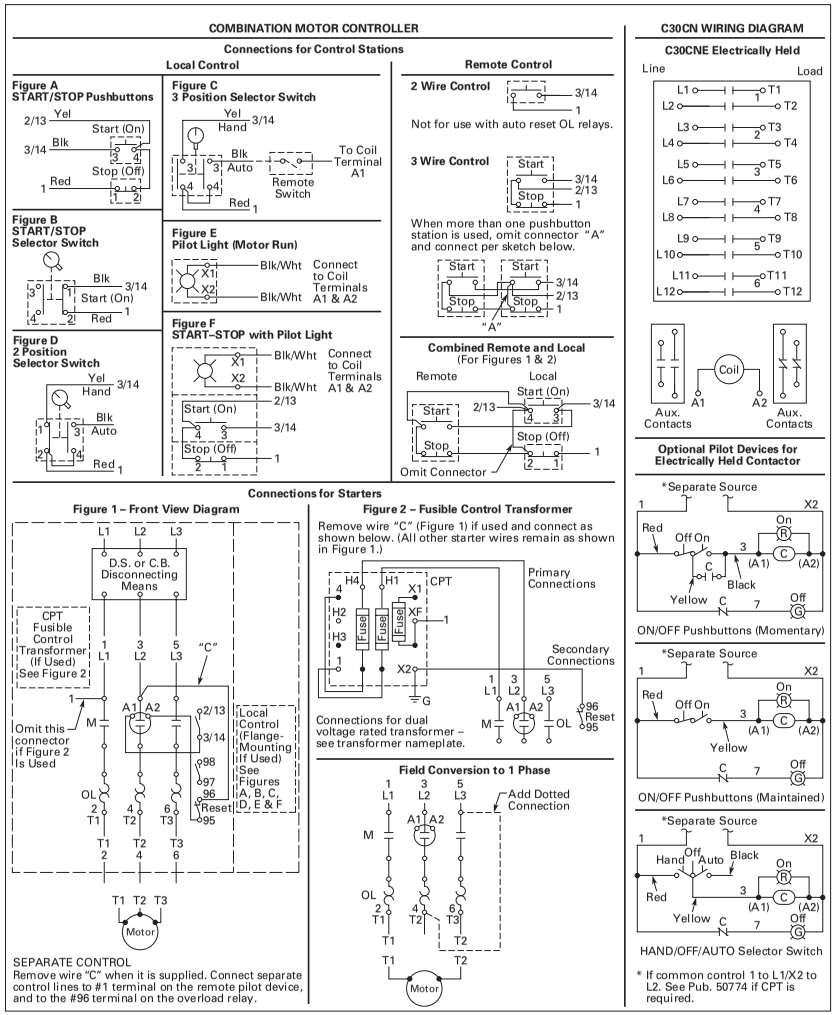

Figure 5-1. Typical Wiring Diagram — C30CN

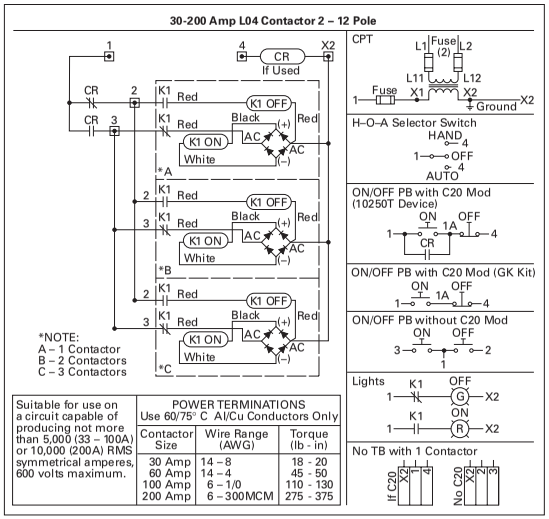

Contactor Size	Wire Range (AWG)	Torque (lb - in)
30 Amp	14 – 8	18 - 20
60 Amp	14 – 4	45 - 50
100 Amp	6 – 1/0	110 - 130
200 Amp	6 – 300MCM	275 - 375

Figure 5-2. Typical Wiring Diagram — Magnetically Latched

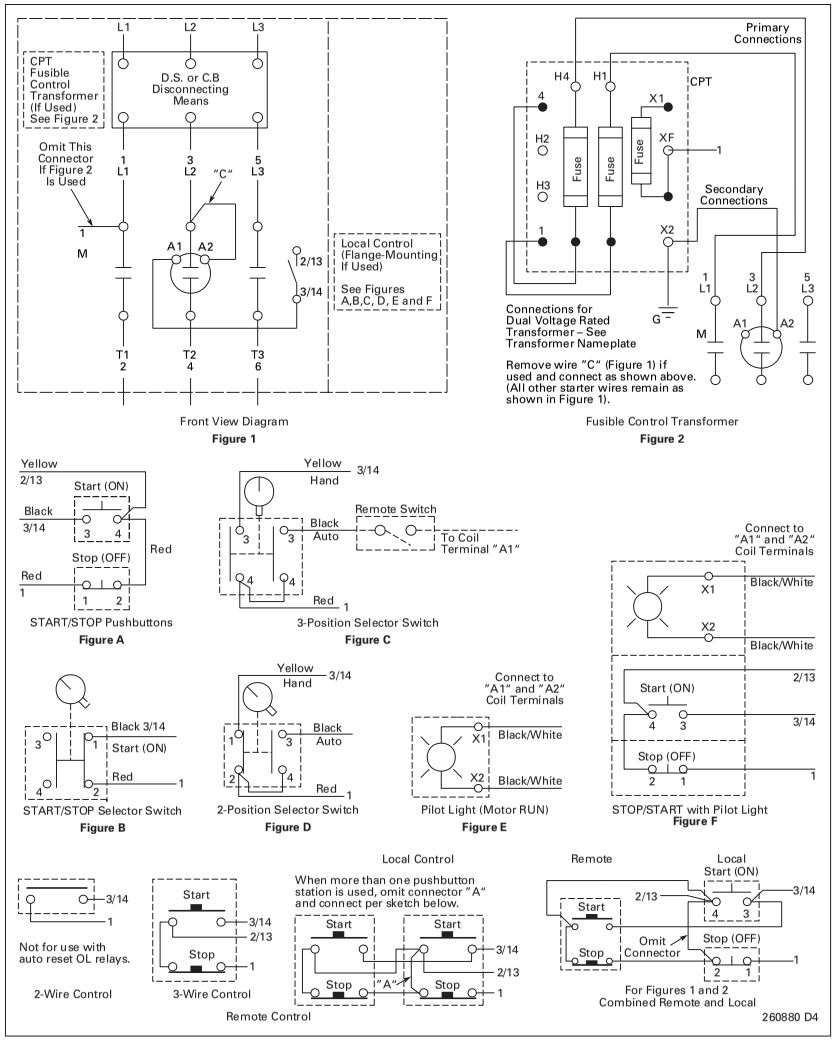

Figure 5-3. Electrically Held Combination Contactors — CN35

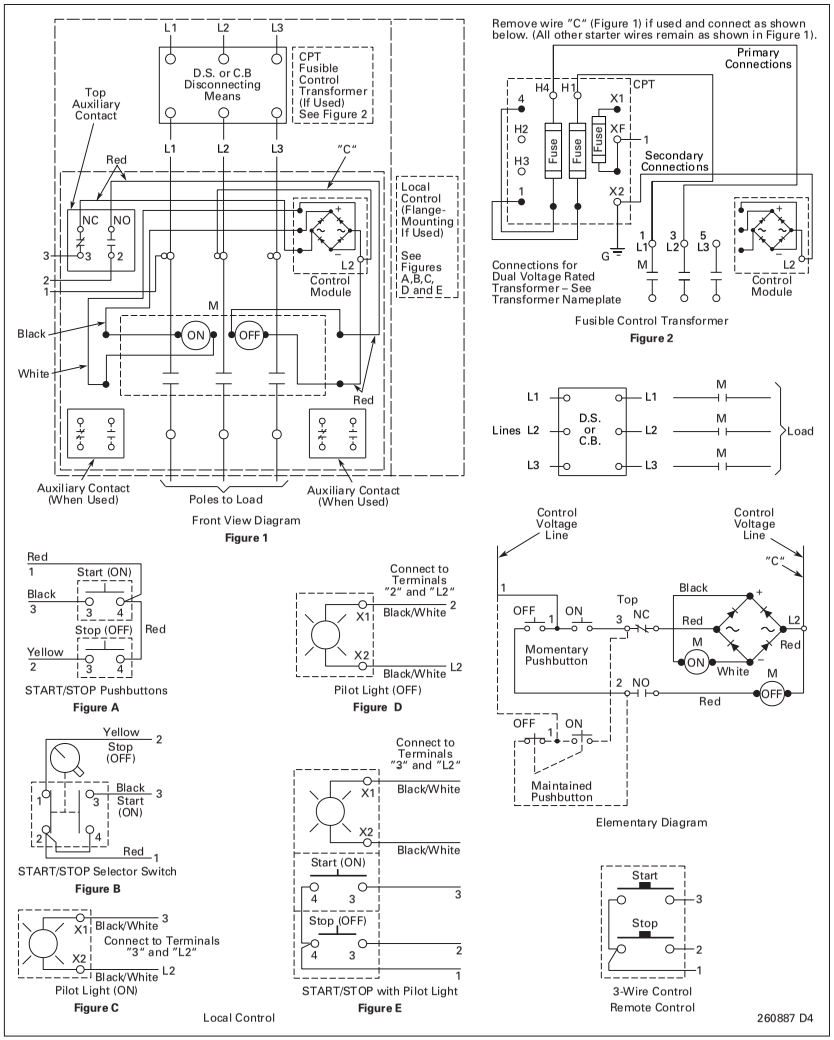

Figure 5-4. Magnetically Latched Combination Contactors

Reduced Voltage Starters

Contents

Description — *Page*

***IT.* Solid-State Soft Starters**
- **Product Family Overview**
  - Product Description 6-2
  - Catalog Number Selection 6-4
  - Cover Control 6-5
- **Non-combination**
  - Product Selection 6-6
- **Combination — Fusible Disconnect**
  - Product Selection 6-9
- **Combination — Circuit Breaker**
  - Product Selection 6-12
- **DImensions** 6-16
- **Wiring Diagrams** 6-17

Freedom 3-Phase Magnetic
- **Product Family Overview**
  - Catalog Number Selection 6-19
  - Cover Control 6-20
- **Autotransformer**
  - Product Selection 6-21
- **Part Winding**
  - Product Selection 6-29
- **Wye Delta**
  - Product Selection 6-34
- **Part Winding Pump Control**
  - Product Selection 6-49
- **Wiring Diagrams** 6-50

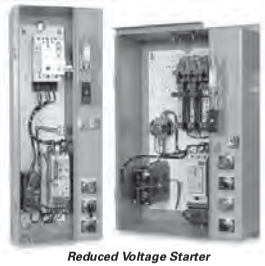

Reduced Voltage Starter

Enclosed 40 hp Soft Starter

Product Description

Eaton's revolutionary design for soft starters is shown in the S752, S801 and S811 soft starter products which are members of the Cutler-Hammer® Intelligent Technologies (*IT.*) family of products. These Reduced Voltage Soft Starters are the most compact, multi-functional, easy-to-install products on the market. Their superiority begins with the control package, which features 24V DC control, onboard Digital Signal Processor (DSP), and use of a low impedance run contactor, all of which contribute to the *IT.* Soft Starter's safety, advanced functionality and compact size.

Designed to control acceleration and deceleration of three-phase motors, products are available from .25 to 1000 amps and are suitable for mounting in a variety of enclosures including Type 1, 12, 3R, 4, 4X and 7/9.

- Built-in overload protection
  - Adjustable trip class 5, 10, 20, 30
  - 30 – 100% FLA adjustment
  - Selectable phase loss protection
- Selectable current limit or ramp start
- Adjustable ramp times
  - 0 – 180 seconds standard
  - Extended ramps available
- Adjustable torque control
- Adjustable kick start control
- Soft Stop control
  - 0 – 60 seconds standard
  - Extended times available
- Built-in low impedance contactor
- Six SCR Control in all units
- Selectable phase reversal protection
- Digital Interface Module

Features and Benefits

- Mechanical stress on system
  - Reduced wear on belts, gears, chains, clutches, shafts and bearings. You can get up to 2 – 6 times the life on standard belts by switching to a soft starter.
  - Elimination of water-hammer in pumping applications extends component life and helps limit leakage in system.
  - Lower shock to product on conveyor lines and material handling gear.
  - Able to catch motors and fans on the fly and control their acceleration.
- Electrical system improvements
  - Limits the peak inrush current as required by many local codes.
  - Helps to eliminate sags on the plant electrical grid when starting large loads, thus avoiding brown-out conditions.
- 24V DC advantages
  - Offers improved personnel safety by eliminating the need for 120V AC in the enclosure.
  - Soft Starter able to ride through 50% voltage conditions indefinitely due to 24V DC power supply and 0% for up to 100 mS.
- 690V Option available on 180A ratings and larger

Digital Interface Module

The S811 has an easy to use Digital Interface Module (DIM) that allows the user to configure the device and to read system parameters. The DIM includes an LCD display and keypad to scroll through the various menus. The DIM allows the user to modify control parameters, enable or disable protections, set communication variables, monitor system parameters such as line voltages and currents, and access the fault queue.

Digital Interface Module (DIM)

The DIM can be removed from the S811 and remote mounted. Kits are available to door mount the DIM, enabling users to safely configure, commission, monitor and troubleshoot the system at the electrical panel without opening the enclosure door.

Standards and Certifications

Note: See **Page 18-2** for additional information on Standards and Certifications that apply to all Cutler-Hammer Enclosed Control products.

- UL Listed
- IEC 947-4-2
- EN 60947.2 (for motor controller)
- cUL (indicates appropriate CSA Standard investigation)
- ABS Type Approved

Options

Pump Control Option

- Designed to reduce "water-hammer" during start-up and stopping sequences
- Stop ramp extended to 120 seconds to help control larger motors and systems with long piping runs

LCD Display

- 2 line x 20 character LED back-lit LCD display
- NEMA 4 rated
- Parameters
  - Voltage L-L (AB, BC, AC)
  - Phase Current
  - Average Current
  - Overload Current Setting
  - Pole Temperature
  - Relay Trip Class
  - Thermal Pile
  - Average Line Current as % of FLA
  - DC Control Voltage
  - Start Count
  - Fault History
- English or Spanish version

Table 6-1. Options

Description	Modification Code
Pump Control Option	**P42**
LCD Display	**K5**
Extended Ramp	**R1**

Catalog Number Selection

Table 6-2. Solid-State Enclosed Control Catalog Numbering System

E C S 90 S 1 C A A

Type
S = Solid-State

Class	Table
90 = Non-combination Reduced Voltage Soft-Starter — S752	**6-4**
Non-combination Reduced Voltage Soft-Starter — S801	**6-5**
91 = Combination Reduced Voltage Soft-Starter — Fusible Disconnect — S752	**6-7**
Combination Reduced Voltage Soft-Starter — Fusible Disconnect — S801	**6-8**
92 = Combination Reduced Voltage Soft-Starter — Circuit Breaker — S752	**6-10**
Combination Reduced Voltage Soft-Starter — Circuit Breaker — S801	**6-11**
93 = Non-combination Reduced Voltage Soft-Starter — S811	**6-6**
94 = Combination Reduced Voltage Soft-Starter — Fusible Disconnect — S811	**6-9**
95 = Combination Reduced Voltage Soft-Starter — Circuit Breaker — S811	**6-12**

Amps			
S752	**S801/S811**		
J = .8	**Q** = 37	**Z** = 240	**5** = 650
K = 1.9	**S** = 66	**1** = 304	**6** = 720
L = 4.4	**V** = 105	**2** = 360	**7** = 850
M = 9	**W** = 135	**3** = 420	**8** = 1000
N = 16	**Y** = 180	**4** = 500	
P = 27			
R = 50			

Enclosure Type
1 = Type 1
2 = Type 3R
3 = Type 4
4 = Type 4X (304-Grade SS)
6 = Type 7/9
8 = Type 12
9 = Type 4X (316-Grade SS)

Disconnect Fuse Clip Ratings		
A = None	**G** = 100A/600V R	**N** = 600A/600V R
B = 30A/250V R	**H** = 200A/250V R	**P** = 800A/600V L
C = 30A/600V R	**J** = 200A/600V R	**Q** = 1200A/600V L
D = 60A/250V R	**K** = 400A/250V R	**R** = 1600A/600V L
E = 60A/600V R	**L** = 400A/600V R	**S** = 2000A/600V L
F = 100A/250V R	**M** = 600A/250V R	**T** = by Description
Breaker		
A = None	**F** = 50A	**K** = 400A
B = 3A	**W** = 70A	**L** = 600A
C = 7A	**G** = 100A	**P** = 1200A
D = 15A	**H** = 150A	**Q** = 1600A
E = 30A	**J** = 250A	

Cover Control
See **Table 6-3** for Options

Voltage	
B = 230V	**E** = 200V
C = 460V	**Q** = 24V DC
D = 575V	

Cover Control

Flange Control Kits

For on-the-job conversion of Type 1, 3R, 4, 4X and 12 enclosed starters. Knock-outs are provided on the Type 1 flange. Type 3R, 4, 4X and 12 have prepunched holes with removable hole plugs.

Factory Installed Pilot Devices

To order factory installed pilot devices, change the 9th character of the Catalog Number to the alpha shown in the table below. Example: to order an **ECS90J4CAA** with START/STOP pushbuttons and a red pilot light, change the **A** to a **C**, i.e. ECS90J4C**C**A.

Table 6-3. Non-reversing Pilot Devices

Description	Factory Installed Flange Control Position 9 Alpha	Field Installation Kits Catalog Number	Description	Factory Installed Flange Control Position 9 Alpha	Field Installation Kits Catalog Number
No Cover Mounted Pilot Devices	**A**	—	START Pushbutton	**L**	**C400T3**
START/STOP Pushbuttons	**B**	**C400T1**	ON Pushbutton	**M**	**C400T4**
with Red RUN Pilot Light	**C**	—	OFF Pushbutton	**N**	**C400T5**
with Red RUN/Green OFF Lights	**D**	—	Red RUN Pilot Light	**P**	**C400T9** ①
			Green OFF	**Q**	**C400T10** ①
			Red RUN/Green OFF Pilot Lights	**R**	**C400T11** ①
ON/OFF Pushbuttons	**E**	**C400T2**	START/STOP Selector Switch	**S**	**C400T13**
with Red RUN Pilot Light	**F**	—	with Red RUN Pilot Light	**T**	—
with Red RUN/Green OFF Lights	**G**	—	with Red RUN/Green OFF Lights	**U**	—
HAND/OFF/AUTO Selector Switch	**H**	**C400T12**	ON/OFF Selector Switch	**V**	**C400T14**
with Red RUN Pilot Light	**J**	—	with Red RUN Pilot Light	**W**	—
with Red RUN/Green OFF Lights	**K**	—	with Red RUN/Green OFF Lights	**X**	—

① Add Code Letter from the table below to Catalog Number for voltage — Kits only. Example: C400T9**B**.

Rating	Code Letter	Rating	Code Letter	Rating	Code Letter
120V 60 Hz	**A**	240V 60 Hz	**B**	480V 60 Hz	**C**
208V 60 Hz	**E**	380V 50 Hz	**L**	600V 60 Hz	**D**

Product Selection

Table 6-4. Class ECS90 — Non-combination Reduced Voltage Soft-Starter — S752

Amps	Motor Voltage	hp ②③	Coil Voltage ①	Type 1 Catalog Number	Type 3R Catalog Number	Type 4X ④ Catalog Number	Type 7/9 Catalog Number	Type 12 Catalog Number	Component Soft Starter (Open) Catalog Number
Frame Size — 54 mm									
.8A	200V	1/8	24V DC	**ECS90J1EAA**	**ECS90J2EAA**	**ECS90J4EAA**	**ECS90J6EAA**	**ECS90J8EAA**	**S752L01N3S**
	230V	1/6		**ECS90J1BAA**	**ECS90J2BAA**	**ECS90J4BAA**	**ECS90J6BAA**	**ECS90J8BAA**	
	460V	1/3		**ECS90J1CAA**	**ECS90J2CAA**	**ECS90J4CAA**	**ECS90J6CAA**	**ECS90J8CAA**	
	575V	1/3		**ECS90J1DAA**	**ECS90J2DAA**	**ECS90J4DAA**	**ECS90J6DAA**	**ECS90J8DAA**	
1.9A	200V	1/3	24V DC	**ECS90K1EAA**	**ECS90K2EAA**	**ECS90K4EAA**	**ECS90K6EAA**	**ECS90K8EAA**	**S752L02N3S**
	230V	1/3		**ECS90K1BAA**	**ECS90K2BAA**	**ECS90K4BAA**	**ECS90K6BAA**	**ECS90K8BAA**	
	460V	3/4		**ECS90K1CAA**	**ECS90K2CAA**	**ECS90K4CAA**	**ECS90K6CAA**	**ECS90K8CAA**	
	575V	1		**ECS90K1DAA**	**ECS90K2DAA**	**ECS90K4DAA**	**ECS90K6DAA**	**ECS90K8DAA**	
4.4A	200V	3/4	24V DC	**ECS90L1EAA**	**ECS90L2EAA**	**ECS90L4EAA**	**ECS90L6EAA**	**ECS90L8EAA**	**S752L04N3S**
	230V	1		**ECS90L1BAA**	**ECS90L2BAA**	**ECS90L4BAA**	**ECS90L6BAA**	**ECS90L8BAA**	
	460V	2		**ECS90L1CAA**	**ECS90L2CAA**	**ECS90L4CAA**	**ECS90L6CAA**	**ECS90L8CAA**	
	575V	3		**ECS90L1DAA**	**ECS90L2DAA**	**ECS90L4DAA**	**ECS90L6DAA**	**ECS90L8DAA**	
9A	200V	2	24V DC	**ECS90M1EAA**	**ECS90M2EAA**	**ECS90M4EAA**	**ECS90M6EAA**	**ECS90M8EAA**	**S752L09N3S**
	230V	2		**ECS90M1BAA**	**ECS90M2BAA**	**ECS90M4BAA**	**ECS90M6BAA**	**ECS90M8BAA**	
	460V	5		**ECS90M1CAA**	**ECS90M2CAA**	**ECS90M4CAA**	**ECS90M6CAA**	**ECS90M8CAA**	
	575V	7-1/2		**ECS90M1DAA**	**ECS90M2DAA**	**ECS90M4DAA**	**ECS90M6DAA**	**ECS90M8DAA**	
16A	200V	3	24V DC	**ECS90N1EAA**	**ECS90N2EAA**	**ECS90N4EAA**	**ECS90N6EAA**	**ECS90N8EAA**	**S752L16N3S**
	230V	5		**ECS90N1BAA**	**ECS90N2BAA**	**ECS90N4BAA**	**ECS90N6BAA**	**ECS90N8BAA**	
	460V	10		**ECS90N1CAA**	**ECS90N2CAA**	**ECS90N4CAA**	**ECS90N6CAA**	**ECS90N8CAA**	
	575V	10		**ECS90N1DAA**	**ECS90N2DAA**	**ECS90N4DAA**	**ECS90N6DAA**	**ECS90N8DAA**	
27A	200V	7-1/2	24V DC	**ECS90P1EAA**	**ECS90P2EAA**	**ECS90P4EAA**	**ECS90P6EAA**	**ECS90P8EAA**	**S752L27N3S**
	230V	7-1/2		**ECS90P1BAA**	**ECS90P2BAA**	**ECS90P4BAA**	**ECS90P6BAA**	**ECS90P8BAA**	
	460V	20		**ECS90P1CAA**	**ECS90P2CAA**	**ECS90P4CAA**	**ECS90P6CAA**	**ECS90P8CAA**	
	575V	25		**ECS90P1DAA**	**ECS90P2DAA**	**ECS90P4DAA**	**ECS90P6DAA**	**ECS90P8DAA**	
50A	200V	10	24V DC	**ECS90R1EAA**	**ECS90R2EAA**	**ECS90R4EAA**	**ECS90R6EAA**	**ECS90R8EAA**	**S752L50N3S**
	230V	10		**ECS90R1BAA**	**ECS90R2BAA**	**ECS90R4BAA**	**ECS90R6BAA**	**ECS90R8BAA**	
	460V	30		**ECS90R1CAA**	**ECS90R2CAA**	**ECS90R4CAA**	**ECS90R6CAA**	**ECS90R8CAA**	
	575V	40		**ECS90R1DAA**	**ECS90R2DAA**	**ECS90R4DAA**	**ECS90R6DAA**	**ECS90R8DAA**	

① All *IT.* soft starters are furnished with 24V DC coils and control power supplies. For 24V DC separate control, use Mod Code **C35** and change the 8th digit to **Q** (i.e. ECS90S1**E**AA becomes ECS90S1**Q**AA-**C35**).

② hp Ratings are based on 40°C Ambient and:
- 25 sec. ramp — 2 starts/hr
- 15 sec. ramp — 4 starts/hr
- 10 sec. ramp — 6 starts/hr
- 7.5 sec. ramp — 8 starts/hr
- 3 sec. ramp — 15 starts/hr

For other ratings, consult your Eaton Representative.

③ Based on 1.0 Service Factor. For 1.15 consult Eaton.

④ These are the Catalog Numbers for Type 4X 304-Grade Stainless Steel, as indicated by the seventh digit **4**. Example: ECS90J**4**EAA. To order Type 4X 316-Grade Stainless Steel, change that digit to **9**. To order Type 4 Painted Steel, change that digit to **3**. To order Nonmetallic, change that digit to **5**. For details on these Alternate Enclosures, see **Tab 14**.

Cover Control ..... **Page 6-5**
Dimensions ..... **Page 6-16**
Wiring Diagrams ..... **Page 6-17**
Accessories ..... **Page 16-36**
Modifications ..... **Page 16-40**
Technical Data ..... **Page 18-38**

Table 6-5. Class ECS90 — Non-combination Reduced Voltage Soft-Starter — S801

Amps	Motor Voltage	hp ②③	Coil Voltage ①	Type 1	Type 3R	Type 4X ④	Type 7/9	Type 12	Component Soft Starter (Open)
				Catalog Number	Catalog Number	Catalog Number	Catalog Number	Catalog Number	Catalog Number
Frame Size — 65 mm									
37A	200V	10	24V DC	ECS90Q1EAA	ECS90Q2EAA	ECS90Q4EAA	ECS90Q6EAA	ECS90Q8EAA	S801N37N3S
	230V	10		ECS90Q1BAA	ECS90Q2BAA	ECS90Q4BAA	ECS90Q6BAA	ECS90Q8BAA	
	460V	25		ECS90Q1CAA	ECS90Q2CAA	ECS90Q4CAA	ECS90Q6CAA	ECS90Q8CAA	
	575V	30		ECS90Q1DAA	ECS90Q2DAA	ECS90Q4DAA	ECS90Q6DAA	ECS90Q8DAA	
66A	200V	20	24V DC	ECS90S1EAA	ECS90S2EAA	ECS90S4EAA	ECS90S6EAA	ECS90S8EAA	S801N66N3S
	230V	20		ECS90S1BAA	ECS90S2BAA	ECS90S4BAA	ECS90S6BAA	ECS90S8BAA	
	460V	50		ECS90S1CAA	ECS90S2CAA	ECS90S4CAA	ECS90S6CAA	ECS90S8CAA	
	575V	60		ECS90S1DAA	ECS90S2DAA	ECS90S4DAA	ECS90S6DAA	ECS90S8DAA	
Frame Size — 110 mm									
105A	200V	30	24V DC	ECS90V1EAA	ECS90V2EAA	ECS90V4EAA	ECS90V6EAA	ECS90V8EAA	S801R10N3S
	230V	40		ECS90V1BAA	ECS90V2BAA	ECS90V4BAA	ECS90V6BAA	ECS90V8BAA	
	460V	75		ECS90V1CAA	ECS90V2CAA	ECS90V4CAA	ECS90V6CAA	ECS90V8CAA	
	575V	100		ECS90V1DAA	ECS90V2DAA	ECS90V4DAA	ECS90V6DAA	ECS90V8DAA	
135A	200V	40	24V DC	ECS90W1EAA	ECS90W2EAA	ECS90W4EAA	ECS90W6EAA	ECS90W8EAA	S801R13N3S
	230V	50		ECS90W1BAA	ECS90W2BAA	ECS90W4BAA	ECS90W6BAA	ECS90W8BAA	
	460V	100		ECS90W1CAA	ECS90W2CAA	ECS90W4CAA	ECS90W6CAA	ECS90W8CAA	
	575V	125		ECS90W1DAA	ECS90W2DAA	ECS90W4DAA	ECS90W6DAA	ECS90W8DAA	
Frame Size — 200 mm									
180A	200V	60	24V DC	ECS90Y1EAA	ECS90Y2EAA	ECS90Y4EAA	ECS90Y6EAA	ECS90Y8EAA	S801T18N3S
	230V	60		ECS90Y1BAA	ECS90Y2BAA	ECS90Y4BAA	ECS90Y6BAA	ECS90Y8BAA	
	460V	150		ECS90Y1CAA	ECS90Y2CAA	ECS90Y4CAA	ECS90Y6CAA	ECS90Y8CAA	
	575V	150		ECS90Y1DAA	ECS90Y2DAA	ECS90Y4DAA	ECS90Y6DAA	ECS90Y8DAA	
240A	200V	75	24V DC	ECS90Z1EAA	ECS90Z2EAA	ECS90Z4EAA	ECS90Z6EAA	ECS90Z8EAA	S801T24N3S
	230V	75		ECS90Z1BAA	ECS90Z2BAA	ECS90Z4BAA	ECS90Z6BAA	ECS90Z8BAA	
	460V	200		ECS90Z1CAA	ECS90Z2CAA	ECS90Z4CAA	ECS90Z6CAA	ECS90Z8CAA	
	575V	200		ECS90Z1DAA	ECS90Z2DAA	ECS90Z4DAA	ECS90Z6DAA	ECS90Z8DAA	
304A	200V	100	24V DC	ECS9011EAA	ECS9012EAA	ECS9014EAA	ECS9016EAA	ECS9018EAA	S801T30N3S
	230V	100		ECS9011BAA	ECS9012BAA	ECS9014BAA	ECS9016BAA	ECS9018BAA	
	460V	250		ECS9011CAA	ECS9012CAA	ECS9014CAA	ECS9016CAA	ECS9018CAA	
	575V	300		ECS9011DAA	ECS9012DAA	ECS9014DAA	ECS9016DAA	ECS9018DAA	
Frame Size — 290 mm									
360A	200V	125	24V DC	ECS9021EAA	ECS9022EAA	ECS9024EAA	ECS9026EAA	ECS9028EAA	S801V36N3S
	230V	150		ECS9021BAA	ECS9022BAA	ECS9024BAA	ECS9026BAA	ECS9028BAA	
	460V	300		ECS9021CAA	ECS9022CAA	ECS9024CAA	ECS9026CAA	ECS9028CAA	
	575V	350		ECS9021DAA	ECS9022DAA	ECS9024DAA	ECS9026DAA	ECS9028DAA	
420A	200V	150	24V DC	ECS9031EAA	ECS9032EAA	ECS9034EAA	ECS9036EAA	ECS9038EAA	S801V42N3S
	230V	175		ECS9031BAA	ECS9032BAA	ECS9034BAA	ECS9036BAA	ECS9038BAA	
	460V	350		ECS9031CAA	ECS9032CAA	ECS9034CAA	ECS9036CAA	ECS9038CAA	
	575V	450		ECS9031DAA	ECS9032DAA	ECS9034DAA	ECS9036DAA	ECS9038DAA	
500A	200V	150	24V DC	ECS9041EAA	ECS9042EAA	ECS9044EAA	ECS9046EAA	ECS9048EAA	S801V50N3S
	230V	200		ECS9041BAA	ECS9042BAA	ECS9044BAA	ECS9046BAA	ECS9048BAA	
	460V	400		ECS9041CAA	ECS9042CAA	ECS9044CAA	ECS9046CAA	ECS9048CAA	
	575V	500		ECS9041DAA	ECS9042DAA	ECS9044DAA	ECS9046DAA	ECS9048DAA	
650A	200V	250	24V DC	ECS9051EAA	ECS9052EAA	ECS9054EAA	ECS9056EAA	ECS9058EAA	S801V65N3S
	230V	250		ECS9051BAA	ECS9052BAA	ECS9054BAA	ECS9056BAA	ECS9058BAA	
	460V	500		ECS9051CAA	ECS9052CAA	ECS9054CAA	ECS9056CAA	ECS9058CAA	
	575V	600		ECS9051DAA	ECS9052DAA	ECS9054DAA	ECS9056DAA	ECS9058DAA	
720A	230V	300	24V DC	ECS9061BAA	ECS9062BAA	ECS9064BAA	ECS9066BAA	ECS9068BAA	S801V72N3S
	460V	600		ECS9061CAA	ECS9062CAA	ECS9064CAA	ECS9066CAA	ECS9068CAA	
	575V	700		ECS9061DAA	ECS9062DAA	ECS9064DAA	ECS9066DAA	ECS9068DAA	
850A	230V	350	24V DC	ECS9071BAA	ECS9072BAA	ECS9074BAA	ECS9076BAA	ECS9078BAA	S801V85N3S
	460V	700		ECS9071CAA	ECS9072CAA	ECS9074CAA	ECS9076CAA	ECS9078CAA	
	575V	900		ECS9071DAA	ECS9072DAA	ECS9074DAA	ECS9076DAA	ECS9078DAA	
1000A	230V	400	24V DC	ECS9081BAA	ECS9082BAA	ECS9084BAA	ECS9086BAA	ECS9088BAA	S801V10N3S
	460V	800		ECS9081CAA	ECS9082CAA	ECS9084CAA	ECS9086CAA	ECS9088CAA	
	575V	1000		ECS9081DAA	ECS9082DAA	ECS9084DAA	ECS9086DAA	ECS9088DAA	

① All *IT.* soft starters are furnished with 24V DC coils and control power supplies. For 24V DC separate control, use Mod Code **C35** and change the 8th digit to **Q** (i.e. ECS90S1EAA becomes ECS90S1QAA-**C35**).

② Standard duty horsepower ratings are for 300% ramp current, 30 seconds ramp time, and 3 starts per hour. Consult Eaton for other ratings.

③ Based on 1.0 Service Factor. For 1.15 consult Eaton.

④ These are the Catalog Numbers for Type 4X 304-Grade Stainless Steel, as indicated by the seventh digit **4**. Example: ECS90S4EAA. To order Type 4X 316-Grade Stainless Steel, change that digit to **9**. To order Type 4 Painted Steel, change that digit to **3**. To order Nonmetallic, change that digit to **5**. For details on these Alternate Enclosures, see **Tab 14**.

Cover Control ..... **Page 6-5**
Dimensions ..... **Page 6-16**
Wiring Diagrams ..... **Page 6-17**
Accessories ..... **Page 16-36**
Modifications ..... **Page 16-40**
Technical Data ..... **Page 18-41**

Table 6-6. Class ECS93 — Non-combination Reduced Voltage Soft-Starter — S811 ⑤

Amps	Motor Voltage	hp ②③	Coil Voltage ①	Type 1	Type 3R	Type 4X ④	Type 7/9	Type 12	Component Soft Starter (Open)
				Catalog Number	Catalog Number	Catalog Number	Catalog Number	Catalog Number	Catalog Number
Frame Size — 65 mm									
37A	200V	10	24V DC	ECS93Q1EAA	ECS93Q2EAA	ECS93Q4EAA	ECS93Q6EAA	ECS93Q8EAA	S811N37N3S
	230V	10		ECS93Q1BAA	ECS93Q2BAA	ECS93Q4BAA	ECS93Q6BAA	ECS93Q8BAA	
	460V	25		ECS93Q1CAA	ECS93Q2CAA	ECS93Q4CAA	ECS93Q6CAA	ECS93Q8CAA	
	575V	30		ECS93Q1DAA	ECS93Q2DAA	ECS93Q4DAA	ECS93Q6DAA	ECS93Q8DAA	
66A	200V	20	24V DC	ECS93S1EAA	ECS93S2EAA	ECS93S4EAA	ECS93S6EAA	ECS93S8EAA	S811N66N3S
	230V	20		ECS93S1BAA	ECS93S2BAA	ECS93S4BAA	ECS93S6BAA	ECS93S8BAA	
	460V	50		ECS93S1CAA	ECS93S2CAA	ECS93S4CAA	ECS93S6CAA	ECS93S8CAA	
	575V	60		ECS93S1DAA	ECS93S2DAA	ECS93S4DAA	ECS93S6DAA	ECS93S8DAA	
Frame Size — 110 mm									
105A	200V	30	24V DC	ECS93V1EAA	ECS93V2EAA	ECS93V4EAA	ECS93V6EAA	ECS93V8EAA	S811R10N3S
	230V	40		ECS93V1BAA	ECS93V2BAA	ECS93V4BAA	ECS93V6BAA	ECS93V8BAA	
	460V	75		ECS93V1CAA	ECS93V2CAA	ECS93V4CAA	ECS93V6CAA	ECS93V8CAA	
	575V	100		ECS93V1DAA	ECS93V2DAA	ECS93V4DAA	ECS93V6DAA	ECS93V8DAA	
135A	200V	40	24V DC	ECS93W1EAA	ECS93W2EAA	ECS93W4EAA	ECS93W6EAA	ECS93W8EAA	S811R13N3S
	230V	50		ECS93W1BAA	ECS93W2BAA	ECS93W4BAA	ECS93W6BAA	ECS93W8BAA	
	460V	100		ECS93W1CAA	ECS93W2CAA	ECS93W4CAA	ECS93W6CAA	ECS93W8CAA	
	575V	125		ECS93W1DAA	ECS93W2DAA	ECS93W4DAA	ECS93W6DAA	ECS93W8DAA	
Frame Size — 200 mm									
180A	200V	60	24V DC	ECS93Y1EAA	ECS93Y2EAA	ECS93Y4EAA	ECS93Y6EAA	ECS93Y8EAA	S811T18N3S
	230V	60		ECS93Y1BAA	ECS93Y2BAA	ECS93Y4BAA	ECS93Y6BAA	ECS93Y8BAA	
	460V	150		ECS93Y1CAA	ECS93Y2CAA	ECS93Y4CAA	ECS93Y6CAA	ECS93Y8CAA	
	575V	150		ECS93Y1DAA	ECS93Y2DAA	ECS93Y4DAA	ECS93Y6DAA	ECS93Y8DAA	
240A	200V	75	24V DC	ECS93Z1EAA	ECS93Z2EAA	ECS93Z4EAA	ECS93Z6EAA	ECS93Z8EAA	S811T24N3S
	230V	75		ECS93Z1BAA	ECS93Z2BAA	ECS93Z4BAA	ECS93Z6BAA	ECS93Z8BAA	
	460V	200		ECS93Z1CAA	ECS93Z2CAA	ECS93Z4CAA	ECS93Z6CAA	ECS93Z8CAA	
	575V	200		ECS93Z1DAA	ECS93Z2DAA	ECS93Z4DAA	ECS93Z6DAA	ECS93Z8DAA	
304A	200V	100	24V DC	ECS9311EAA	ECS9312EAA	ECS9314EAA	ECS9316EAA	ECS9318EAA	S811T30N3S
	230V	100		ECS9311BAA	ECS9312BAA	ECS9314BAA	ECS9316BAA	ECS9318BAA	
	460V	250		ECS9311CAA	ECS9312CAA	ECS9314CAA	ECS9316CAA	ECS9318CAA	
	575V	300		ECS9311DAA	ECS9312DAA	ECS9314DAA	ECS9316DAA	ECS9318DAA	
Frame Size — 290 mm									
360A	200V	125	24V DC	ECS9321EAA	ECS9322EAA	ECS9324EAA	ECS9326EAA	ECS9328EAA	S811V36N3S
	230V	150		ECS9321BAA	ECS9322BAA	ECS9324BAA	ECS9326BAA	ECS9328BAA	
	460V	300		ECS9321CAA	ECS9322CAA	ECS9324CAA	ECS9326CAA	ECS9328CAA	
	575V	350		ECS9321DAA	ECS9322DAA	ECS9324DAA	ECS9326DAA	ECS9328DAA	
420A	200V	150	24V DC	ECS9331EAA	ECS9332EAA	ECS9334EAA	ECS9336EAA	ECS9338EAA	S811V42N3S
	230V	175		ECS9331BAA	ECS9332BAA	ECS9334BAA	ECS9336BAA	ECS9338BAA	
	460V	350		ECS9331CAA	ECS9332CAA	ECS9334CAA	ECS9336CAA	ECS9338CAA	
	575V	450		ECS9331DAA	ECS9332DAA	ECS9334DAA	ECS9336DAA	ECS9338DAA	
500A	200V	150	24V DC	ECS9341EAA	ECS9342EAA	ECS9344EAA	ECS9346EAA	ECS9348EAA	S811V50N3S
	230V	200		ECS9341BAA	ECS9342BAA	ECS9344BAA	ECS9346BAA	ECS9348BAA	
	460V	400		ECS9341CAA	ECS9342CAA	ECS9344CAA	ECS9346CAA	ECS9348CAA	
	575V	500		ECS9341DAA	ECS9342DAA	ECS9344DAA	ECS9346DAA	ECS9348DAA	
650A	200V	250	24V DC	ECS9351EAA	ECS9352EAA	ECS9354EAA	ECS9356EAA	ECS9358EAA	S811V65N3S
	230V	250		ECS9351BAA	ECS9352BAA	ECS9354BAA	ECS9356BAA	ECS9358BAA	
	460V	500		ECS9351CAA	ECS9352CAA	ECS9354CAA	ECS9356CAA	ECS9358CAA	
	575V	600		ECS9351DAA	ECS9352DAA	ECS9354DAA	ECS9356DAA	ECS9358DAA	
720A	230V	300	24V DC	ECS9361BAA	ECS9362BAA	ECS9364BAA	ECS9366BAA	ECS9368BAA	S811V72N3S
	460V	600		ECS9361CAA	ECS9362CAA	ECS9364CAA	ECS9366CAA	ECS9368CAA	
	575V	700		ECS9361DAA	ECS9362DAA	ECS9364DAA	ECS9366DAA	ECS9368DAA	
850A	230V	350	24V DC	ECS9371BAA	ECS9372BAA	ECS9374BAA	ECS9376BAA	ECS9378BAA	S811V85N3S
	460V	700		ECS9371CAA	ECS9372CAA	ECS9374CAA	ECS9376CAA	ECS9378CAA	
	575V	900		ECS9371DAA	ECS9372DAA	ECS9374DAA	ECS9376DAA	ECS9378DAA	
1000A	230V	400	24V DC	ECS9381BAA	ECS9382BAA	ECS9384BAA	ECS9386BAA	ECS9388BAA	S811V10N3S
	460V	800		ECS9381CAA	ECS9382CAA	ECS9384CAA	ECS9386CAA	ECS9388CAA	
	575V	1000		ECS9381DAA	ECS9382DAA	ECS9384DAA	ECS9386DAA	ECS9388DAA	

① All *IT.* soft starters are furnished with 24V DC coils and control power supplies. For 24V DC separate control, use Mod Code **C35** and change the 8th digit to **Q** (i.e. ECS90S1EAA becomes ECS90S1QAA-**C35**).

② Standard duty horsepower ratings are for 300% ramp current, 30 seconds ramp time, and 3 starts per hour. Consult Eaton for other ratings.

③ Based on 1.0 Service Factor. For 1.15 consult Eaton.

④ These are the Catalog Numbers for Type 4X 304-Grade Stainless Steel, as indicated by the seventh digit **4**. Example: ECS93S4EAA. To order Type 4X 316-Grade Stainless Steel, change that digit to **9**. To order Type 4 Painted Steel, change that digit to **3**. To order Nonmetallic, change that digit to **5**. For details on these Alternate Enclosures, see **Tab 14**.

⑤ Digital Interface Module (DIM) is mounted on door as standard.

Cover Control ..... **Page 6-5**
Dimensions ..... **Page 6-16**
Wiring Diagrams ..... **Page 6-17**
Accessories ..... **Page 16-36**
Modifications ..... **Page 16-40**
Technical Data ..... **Page 18-41**

Type 3R Fused S801 IT. Soft Starter

Product Selection

Table 6-7. Class ECS91 — Combination Reduced Voltage Soft-Starter — Fusible Disconnect — S752

Amps	Motor Voltage	hp ②	Coil Voltage ①	Switch Rating	Type 1	Type 3R	Type 4X ③	Type 7/9	Type 12	Component Soft Starter (Open)
					Catalog Number	Catalog Number	Catalog Number	Catalog Number	Catalog Number	Catalog Number
Frame Size — 54 mm										
.8A	200V	1/8	24V DC	30A	ECS91J1EAB	ECS91J2EAB	ECS91J4EAB	ECS91J6EAB	ECS91J8EAB	S752L01N3S
	230V	1/6			ECS91J1BAB	ECS91J2BAB	ECS91J4BAB	ECS91J6BAB	ECS91J8BAB	
	460V	1/3			ECS91J1CAC	ECS91J2CAC	ECS91J4CAC	ECS91J6CAC	ECS91J8CAC	
	575V	1/3			ECS91J1DAC	ECS91J2DAC	ECS91J4DAC	ECS91J6DAC	ECS91J8DAC	
1.9A	200V	1/3	24V DC	30A	ECS91K1EAB	ECS91K2EAB	ECS91K4EAB	ECS91K6EAB	ECS91K8EAB	S752L02N3S
	230V	1/3			ECS91K1BAB	ECS91K2BAB	ECS91K4BAB	ECS91K6BAB	ECS91K8BAB	
	460V	3/4			ECS91K1CAC	ECS91K2CAC	ECS91K4CAC	ECS91K6CAC	ECS91K8CAC	
	575V	1			ECS91K1DAC	ECS91K2DAC	ECS91K4DAC	ECS91K6DAC	ECS91K8DAC	
4.4A	200V	3/4	24V DC	30A	ECS91L1EAB	ECS91L2EAB	ECS91L4EAB	ECS91L6EAB	ECS91L8EAB	S752L04N3S
	230V	3/4			ECS91L1BAB	ECS91L2BAB	ECS91L4BAB	ECS91L6BAB	ECS91L8BAB	
	460V	2			ECS91L1CAC	ECS91L2CAC	ECS91L4CAC	ECS91L6CAC	ECS91L8CAC	
	575V	3			ECS91L1DAC	ECS91L2DAC	ECS91L4DAC	ECS91L6DAC	ECS91L8DAC	
9A	200V	2	24V DC	30A	ECS91M1EAB	ECS91M2EAB	ECS91M4EAB	ECS91M6EAB	ECS91M8EAB	S752L09N3S
	230V	2			ECS91M1BAB	ECS91M2BAB	ECS91M4BAB	ECS91M6BAB	ECS91M8BAB	
	460V	5			ECS91M1CAC	ECS91M2CAC	ECS91M4CAC	ECS91M6CAC	ECS91M8CAC	
	575V	5			ECS91M1DAC	ECS91M2DAC	ECS91M4DAC	ECS91M6DAC	ECS91M8DAC	
16A	200V	3	24V DC	30A	ECS91N1EAB	ECS91N2EAB	ECS91N4EAB	ECS91N6EAB	ECS91N8EAB	S752L16N3S
	230V	3			ECS91N1BAB	ECS91N2BAB	ECS91N4BAB	ECS91N6BAB	ECS91N8BAB	
	460V	7-1/2			ECS91N1CAC	ECS91N2CAC	ECS91N4CAC	ECS91N6CAC	ECS91N8CAC	
	575V	10			ECS91N1DAC	ECS91N2DAC	ECS91N4DAC	ECS91N6DAC	ECS91N8DAC	
27A	200V	5	24V DC	60A	ECS91P1EAD	ECS91P2EAD	ECS91P4EAD	ECS91P6EAD	ECS91P8EAD	S752L27N3S
	230V	7-1/2			ECS91P1BAD	ECS91P2BAD	ECS91P4BAD	ECS91P6BAD	ECS91P8BAD	
	460V	15			ECS91P1CAE	ECS91P2CAE	ECS91P4CAE	ECS91P6CAE	ECS91P8CAE	
	575V	20			ECS91P1DAE	ECS91P2DAE	ECS91P4DAE	ECS91P6DAE	ECS91P8DAE	
50A	200V	10	24V DC	60A	ECS91R1EAD	ECS91R2EAD	ECS91R4EAD	ECS91R6EAD	ECS91R8EAD	S752L50N3S
	230V	10			ECS91R1BAD	ECS91R2BAD	ECS91R4BAD	ECS91R6BAD	ECS91R8BAD	
	460V	30			ECS91R1CAE	ECS91R2CAE	ECS91R4CAE	ECS91R6CAE	ECS91R8CAE	
	575V	40			ECS91R1DAE	ECS91R2DAE	ECS91R4DAE	ECS91R6DAE	ECS91R8DAE	

① All *IT.* soft starters are furnished with 24V DC coils and control power supplies. For 24V DC separate control, use Mod Code **C35** and change the 8th digit to **Q** (i.e. ECS90S1EAA becomes ECS90S1**Q**AA-**C35**).

② hp Ratings are based on 40°C Ambient and:
- 25 sec. ramp — 2 starts/hr
- 15 sec. ramp — 4 starts/hr
- 10 sec. ramp — 6 starts/hr
- 7.5 sec. ramp — 8 starts/hr
- 3 sec. ramp — 15 starts/hr

For other ratings, consult your Eaton Representative.

③ These are the Catalog Numbers for Type 4X 304-Grade Stainless Steel, as indicated by the seventh digit **4**. Example: ECS91J4EAA. To order Type 4X 316-Grade Stainless Steel, change that digit to **9**. To order Type 4 Painted Steel, change that digit to **3**. To order Nonmetallic, change that digit to **5**. For details on these Alternate Enclosures, see **Tab 14**.

Cover Control ..... **Page 6-5**
Dimensions ..... **Page 6-16**
Wiring Diagrams ..... **Page 6-17**
Accessories ..... **Page 16-36**
Modifications ..... **Page 16-40**
Technical Data ..... **Page 18-38**

Table 6-8. Class ECS91 — Combination Reduced Voltage Soft-Starter — Fusible Disconnect — S801

Amps	Motor Voltage	hp ②③	Coil Voltage ①	Switch Rating	Type 1	Type 3R	Type 4X ④	Type 12	Component Soft Starter (Open)
					Catalog Number	Catalog Number	Catalog Number	Catalog Number	Catalog Number
Frame Size — 65 mm									
37A	200V	3	24V DC	30A	ECS91Q1EAB	ECS91Q2EAB	ECS91Q4EAB	ECS91Q8EAB	S801N37N3S
		10		60A	ECS91Q1EAD	ECS91Q2EAD	ECS91Q4EAD	ECS91Q8EAD	
	230V	7-1/2		30A	ECS91Q1BAB	ECS91Q2BAB	ECS91Q4BAB	ECS91Q8BAB	S801N37N3S
		10		60A	ECS91Q1BAD	ECS91Q2BAD	ECS91Q4BAD	ECS91Q8BAD	
	460V	15		30A	ECS91Q1CAC	ECS91Q2CAC	ECS91Q4CAC	ECS91Q8CAC	S801N37N3S
		25		60A	ECS91Q1CAE	ECS91Q2CAE	ECS91Q4CAE	ECS91Q8CAE	
	575V	20		30A	ECS91Q1DAC	ECS91Q2DAC	ECS91Q4DAC	ECS91Q8DAC	S801N37N3S
		30		60A	ECS91Q1DAE	ECS91Q2DAE	ECS91Q4DAE	ECS91Q8DAE	
66A	200V	10	24V DC	60A	ECS91S1EAD	ECS91S2EAD	ECS91S4EAD	ECS91S8EAD	S801N66N3S
		20		100A	ECS91S1EAF	ECS91S2EAF	ECS91S4EAF	ECS91S8EAF	
	230V	15		60A	ECS91S1BAD	ECS91S2BAD	ECS91S4BAD	ECS91S8BAD	S801N66N3S
		20		100A	ECS91S1BAF	ECS91S2BAF	ECS91S4BAF	ECS91S8BAF	
	460V	50		100A	ECS91S1CAG	ECS91S2CAG	ECS91S4CAG	ECS91S8CAG	S801N66N3S
	575V	40		60A	ECS91S1DAE	ECS91S2DAE	ECS91S4DAE	ECS91S8DAE	S801N66N3S
		60		100A	ECS91S1DAG	ECS91S2DAG	ECS91S4DAG	ECS91S8DAG	
Frame Size — 110 mm									
105A	200V	30	24V DC	200A	ECS91V1EAH	ECS91V2EAH	ECS91V4EAH	ECS91V8EAH	S801R10N3S
	230V	40		200A	ECS91V1BAH	ECS91V2BAH	ECS91V4BAH	ECS91V8BAH	
	460V	75		200A	ECS91V1CAJ	ECS91V2CAJ	ECS91V4CAJ	ECS91V8CAJ	
	575V	100		200A	ECS91V1DAJ	ECS91V2DAJ	ECS91V4DAJ	ECS91V8DAJ	
135A	200V	40	24V DC	200A	ECS91W1EAH	ECS91W2EAH	ECS91W4EAH	ECS91W8EAH	S801R13N3S
	230V	50		200A	ECS91W1BAH	ECS91W2BAH	ECS91W4BAH	ECS91W8BAH	
	460V	100		200A	ECS91W1CAJ	ECS91W2CAJ	ECS91W4CAJ	ECS91W8CAJ	
	575V	125		200A	ECS91W1DAJ	ECS91W2DAJ	ECS91W4DAJ	ECS91W8DAJ	
Frame Size — 200 mm									
180A	200V	60	24V DC	400A	ECS91Y1EAK	ECS91Y2EAK	ECS91Y4EAK	ECS91Y8EAK	S801T18N3S
	230V	60		400A	ECS91Y1BAK	ECS91Y2BAK	ECS91Y4BAK	ECS91Y8BAK	
	460V	150		400A	ECS91Y1CAL	ECS91Y2CAL	ECS91Y4CAL	ECS91Y8CAL	
	575V	150		400A	ECS91Y1DAL	ECS91Y2DAL	ECS91Y4DAL	ECS91Y8DAL	
240A	200V	75	24V DC	400A	ECS91Z1EAK	ECS91Z2EAK	ECS91Z4EAK	ECS91Z8EAK	S801T24N3S
	230V	75		400A	ECS91Z1BAK	ECS91Z2BAK	ECS91Z4BAK	ECS91Z8BAK	
	460V	200		400A	ECS91Z1CAL	ECS91Z2CAL	ECS91Z4CAL	ECS91Z8CAL	
	575V	200		400A	ECS91Z1DAL	ECS91Z2DAL	ECS91Z4DAL	ECS91Z8DAL	
304A	200V	100	24V DC	400A	ECS9111EAK	ECS9112EAK	ECS9114EAK	ECS9118EAK	S801T30N3S
	230V	100		400A	ECS9111BAK	ECS9112BAK	ECS9114BAK	ECS9118BAK	
	460V	250		400A	ECS9111CAL	ECS9112CAL	ECS9114CAL	ECS9118CAL	
	575V	300		400A	ECS9111DAL	ECS9112DAL	ECS9114DAL	ECS9118DAL	
Frame Size — 290 mm									
360A	200V	125	24V DC	600A	ECS9121EAM	ECS9122EAM	ECS9124EAM	ECS9128EAM	S801V36N3S
	230V	125		600A	ECS9121BAM	ECS9122BAM	ECS9124BAM	ECS9128BAM	
	460V	300		600A	ECS9121CAN	ECS9122CAN	ECS9124CAN	ECS9128CAN	
	575V	350		600A	ECS9121DAN	ECS9122DAN	ECS9124DAN	ECS9128DAN	
420A	200V	150	24V DC	600A	ECS9131EAM	ECS9132EAM	ECS9134EAM	ECS9138EAM	S801V42N3S
	230V	150		600A	ECS9131BAM	ECS9132BAM	ECS9134BAM	ECS9138BAM	
	460V	350		600A	ECS9131CAN	ECS9132CAN	ECS9134CAN	ECS9138CAN	
	575V	450		600A	ECS9131DAN	ECS9132DAN	ECS9134DAN	ECS9138DAN	
500A	200V	150	24V DC	800A	ECS9141EAP	ECS9142EAP	ECS9144EAP	ECS9148EAP	S801V50N3S
	230V	200		800A	ECS9141BAP	ECS9142BAP	ECS9144BAP	ECS9148BAP	
	460V	400		800A	ECS9141CAP	ECS9142CAP	ECS9144CAP	ECS9148CAP	
	575V	500		800A	ECS9141DAP	ECS9142DAP	ECS9144DAP	ECS9148DAP	
650A	460V	500	24V DC	800A	ECS9151CAP	ECS9152CAP	ECS9154CAP	ECS9158CAP	S801V65N3S
	575V	600		800A	ECS9151DAP	ECS9152DAP	ECS9154DAP	ECS9158DAP	
720A	460V	600	24V DC	1200A	ECS9161CAQ	ECS9162CAQ	ECS9164CAQ	ECS9168CAQ	S801V72N3S
	575V	700		1200A	ECS9161DAQ	ECS9162DAQ	ECS9164DAQ	ECS9168DAQ	
850A	460V	700	24V DC	1600A	ECS9171CAR	ECS9172CAR	ECS9174CAR	ECS9178CAR	S801V85N3S
	575V	800		1600A	ECS9171DAR	ECS9172DAR	ECS9174DAR	ECS9178DAR	
1000A	230V	400	24V DC	⑤	ECS9181BA_ ⑤	ECS9182BA_ ⑤	ECS9184BA_ ⑤	ECS9188BA_ ⑤	S801V10N3S
	460V	800		⑤	ECS9181CA_ ⑤	ECS9182CA_ ⑤	ECS9184CA_ ⑤	ECS9188CA_ ⑤	
	575V	1000		⑤	ECS9181DA_ ⑤	ECS9182DA_ ⑤	ECS9184DA_ ⑤	ECS9188DA_ ⑤	

① All *IT.* soft starters are furnished with 24V DC coils and control power supplies. For 24V DC separate control, use Mod Code **C35** and change the 8th digit to **Q** (i.e. ECS90S1EAA becomes ECS90S1**Q**AA-**C35**).

② Standard duty horsepower ratings are for 300% ramp current, 30 seconds ramp time, and 3 starts per hour. Consult Eaton for other ratings.

③ Based on 1.0 Service Factor. For 1.15 consult Eaton.

④ These are the Catalog Numbers for Type 4X 304-Grade Stainless Steel, as indicated by the seventh digit **4**. Example: ECS91S4EAA. To order Type 4X 316-Grade Stainless Steel, change that digit to **9**. To order Type 4 Painted Steel, change that digit to **3**. To order Nonmetallic, change that digit to **5**. For details on these Alternate Enclosures, see **Tab 14**.

⑤ Consult Eaton.

Cover Control ..... **Page 6-5**
Dimensions ..... **Page 6-16**
Wiring Diagrams ..... **Page 6-17**
Accessories ..... **Page 16-36**
Modifications ..... **Page 16-40**
Technical Data ..... **Page 18-41**

Table 6-9. Class ECS94 — Combination Reduced Voltage Soft-Starter — Fusible Disconnect — S811 ⑥

Amps	Motor Voltage	hp ②③	Coil Voltage ①	Switch Rating	Type 1 Catalog Number	Type 3R Catalog Number	Type 4X ④ Catalog Number	Type 12 Catalog Number	Component Soft Starter (Open) Catalog Number
Frame Size — 65 mm									
37A	200V	3	24V DC	30A	ECS94Q1EAB	ECS94Q2EAB	ECS94Q4EAB	ECS94Q8EAB	S811N37N3S
		10		60A	ECS94Q1EAD	ECS94Q2EAD	ECS94Q4EAD	ECS94Q8EAD	
	230V	7-1/2		30A	ECS94Q1BAB	ECS94Q2BAB	ECS94Q4BAB	ECS94Q8BAB	S811N37N3S
		10		60A	ECS94Q1BAD	ECS94Q2BAD	ECS94Q4BAD	ECS94Q8BAD	
	460V	15		30A	ECS94Q1CAC	ECS94Q2CAC	ECS94Q4CAC	ECS94Q8CAC	S811N37N3S
		25		60A	ECS94Q1CAE	ECS94Q2CAE	ECS94Q4CAE	ECS94Q8CAE	
	575V	20		30A	ECS94Q1DAC	ECS94Q2DAC	ECS94Q4DAC	ECS94Q8DAC	S811N37N3S
		30		60A	ECS94Q1DAE	ECS94Q2DAE	ECS94Q4DAE	ECS94Q8DAE	
66A	200V	10	24V DC	60A	ECS94S1EAD	ECS94S2EAD	ECS94S4EAD	ECS94S8EAD	S811N66N3S
		20		100A	ECS94S1EAF	ECS94S2EAF	ECS94S4EAF	ECS94S8EAF	
	230V	15		60A	ECS94S1BAD	ECS94S2BAD	ECS94S4BAD	ECS94S8BAD	S811N66N3S
		20		100A	ECS94S1BAF	ECS94S2BAF	ECS94S4BAF	ECS94S8BAF	
	460V	50		100A	ECS94S1CAG	ECS94S2CAG	ECS94S4CAG	ECS94S8CAG	S811N66N3S
	575V	40		60A	ECS94S1DAE	ECS94S2DAE	ECS94S4DAE	ECS94S8DAE	S811N66N3S
		60		100A	ECS94S1DAG	ECS94S2DAG	ECS94S4DAG	ECS94S8DAG	
Frame Size — 110 mm									
105A	200V	30	24V DC	200A	ECS94V1EAH	ECS94V2EAH	ECS94V4EAH	ECS94V8EAH	S811R10N3S
	230V	40		200A	ECS94V1BAH	ECS94V2BAH	ECS94V4BAH	ECS94V8BAH	
	460V	75		200A	ECS94V1CAJ	ECS94V2CAJ	ECS94V4CAJ	ECS94V8CAJ	
	575V	100		200A	ECS94V1DAJ	ECS94V2DAJ	ECS94V4DAJ	ECS94V8DAJ	
135A	200V	40	24V DC	200A	ECS94W1EAH	ECS94W2EAH	ECS94W4EAH	ECS94W8EAH	S811R13N3S
	230V	50		200A	ECS94W1BAH	ECS94W2BAH	ECS94W4BAH	ECS94W8BAH	
	460V	100		200A	ECS94W1CAJ	ECS94W2CAJ	ECS94W4CAJ	ECS94W8CAJ	
	575V	125		200A	ECS94W1DAJ	ECS94W2DAJ	ECS94W4DAJ	ECS94W8DAJ	
Frame Size — 200 mm									
180A	200V	60	24V DC	400A	ECS94Y1EAK	ECS94Y2EAK	ECS94Y4EAK	ECS94Y8EAK	S811T18N3S
	230V	60		400A	ECS94Y1BAK	ECS94Y2BAK	ECS94Y4BAK	ECS94Y8BAK	
	460V	150		400A	ECS94Y1CAL	ECS94Y2CAL	ECS94Y4CAL	ECS94Y8CAL	
	575V	150		400A	ECS94Y1DAL	ECS94Y2DAL	ECS94Y4DAL	ECS94Y8DAL	
240A	200V	75	24V DC	400A	ECS94Z1EAK	ECS94Z2EAK	ECS94Z4EAK	ECS94Z8EAK	S811T24N3S
	230V	75		400A	ECS94Z1BAK	ECS94Z2BAK	ECS94Z4BAK	ECS94Z8BAK	
	460V	200		400A	ECS94Z1CAL	ECS94Z2CAL	ECS94Z4CAL	ECS94Z8CAL	
	575V	200		400A	ECS94Z1DAL	ECS94Z2DAL	ECS94Z4DAL	ECS94Z8DAL	
304A	200V	100	24V DC	400A	ECS9411EAK	ECS9412EAK	ECS9414EAK	ECS9418EAK	S811T30N3S
	230V	100		400A	ECS9411BAK	ECS9412BAK	ECS9414BAK	ECS9418BAK	
	460V	250		400A	ECS9411CAL	ECS9412CAL	ECS9414CAL	ECS9418CAL	
	575V	300		400A	ECS9411DAL	ECS9412DAL	ECS9414DAL	ECS9418DAL	
Frame Size — 290 mm									
360A	200V	125	24V DC	600A	ECS9421EAM	ECS9422EAM	ECS9424EAM	ECS9428EAM	S811V36N3S
	230V	125		600A	ECS9421BAM	ECS9422BAM	ECS9424BAM	ECS9428BAM	
	460V	300		600A	ECS9421CAN	ECS9422CAN	ECS9424CAN	ECS9428CAN	
	575V	350		600A	ECS9421DAN	ECS9422DAN	ECS9424DAN	ECS9428DAN	
420A	200V	150	24V DC	600A	ECS9431EAM	ECS9432EAM	ECS9434EAM	ECS9438EAM	S811V42N3S
	230V	150		600A	ECS9431BAM	ECS9432BAM	ECS9434BAM	ECS9438BAM	
	460V	350		600A	ECS9431CAN	ECS9432CAN	ECS9434CAN	ECS9438CAN	
	575V	450		600A	ECS9431DAN	ECS9432DAN	ECS9434DAN	ECS9438DAN	
500A	200V	150	24V DC	800A	ECS9441EAP	ECS9442EAP	ECS9444EAP	ECS9448EAP	S811V50N3S
	230V	200		800A	ECS9441BAP	ECS9442BAP	ECS9444BAP	ECS9448BAP	
	460V	400		800A	ECS9441CAP	ECS9442CAP	ECS9444CAP	ECS9448CAP	
	575V	500		800A	ECS9441DAP	ECS9442DAP	ECS9444DAP	ECS9448DAP	
650A	460V	500	24V DC	800A	ECS9451CAP	ECS9452CAP	ECS9454CAP	ECS9458CAP	S811V65N3S
	575V	600		800A	ECS9451DAP	ECS9452DAP	ECS9454DAP	ECS9458DAP	
720A	460V	600	24V DC	1200A	ECS9461CAQ	ECS9462CAQ	ECS9464CAQ	ECS9468CAQ	S811V72N3S
	575V	700		1200A	ECS9461DAQ	ECS9462DAQ	ECS9464DAQ	ECS9468DAQ	
850A	460V	700	24V DC	1600A	ECS9471CAR	ECS9472CAR	ECS9474CAR	ECS9478CAR	S811V85N3S
	575V	800		1600A	ECS9471DAR	ECS9472DAR	ECS9474DAR	ECS9478DAR	
1000A	230V	400	24V DC	⑤	ECS9481BA_ ⑤	ECS9482BA_ ⑤	ECS9484BA_ ⑤	ECS9488BA_ ⑤	S811V10N3S
	460V	800		⑤	ECS9481CA_ ⑤	ECS9482CA_ ⑤	ECS9484CA_ ⑤	ECS9488CA_ ⑤	
	575V	1000		⑤	ECS9481DA_ ⑤	ECS9482DA_ ⑤	ECS9484DA_ ⑤	ECS9488DA_ ⑤	

① All *IT.* soft starters are furnished with 24V DC coils and control power supplies. For 24V DC separate control, use Mod Code **C35** and change the 8th digit to **Q** (i.e. ECS90S1EAA becomes ECS90S1QAA-**C35**).

② Standard duty horsepower ratings are for 300% ramp current, 30 seconds ramp time, and 3 starts per hour. Consult Eaton for other ratings.

③ Based on 1.0 Service Factor. For 1.15 consult Eaton.

④ These are the Catalog Numbers for Type 4X 304-Grade Stainless Steel, as indicated by the seventh digit **4**. Example: ECS94Q4EAA. To order Type 4X 316-Grade Stainless Steel, change that digit to **9**. To order Type 4 Painted Steel, change that digit to **3**. To order Nonmetallic, change that digit to **5**. For details on these Alternate Enclosures, see **Tab 14**.

⑤ Consult Eaton.

⑥ Digital Interface Module (DIM) is mounted on door as standard.

Cover Control ..... **Page 6-5**
Dimensions ..... **Page 6-16**
Wiring Diagrams ..... **Page 6-17**
Accessories ..... **Page 16-36**
Modifications ..... **Page 16-40**
Technical Data ..... **Page 18-41**

Type 12 HMCP Combination IT. S801 Soft Starter

Product Selection

Table 6-10. Class ECS92 — Combination Reduced Voltage Soft-Starter — Circuit Breaker — S752

Amps	Motor Voltage	hp ②	Coil Voltage ①	Circuit Breaker	Type 1 Catalog Number	Type 3R Catalog Number	Type 4X ③ Catalog Number	Type 7/9 Catalog Number	Type 12 Catalog Number	Component Soft Starter (Open) Catalog Number
Frame Size — 54 mm										
.8A	200V	1/8	24V DC	3A	ECS92J1EAB	ECS92J2EAB	ECS92J4EAB	ECS92J6EAB	ECS92J8EAB	S752L01N3S
	230V	1/6		3A	ECS92J1BAB	ECS92J2BAB	ECS92J4BAB	ECS92J6BAB	ECS92J8BAB	
	460V	1/3		3A	ECS92J1CAB	ECS92J2CAB	ECS92J4CAB	ECS92J6CAB	ECS92J8CAB	
	575V	1/3		3A	ECS92J1DAB	ECS92J2DAB	ECS92J4DAB	ECS92J6DAB	ECS92J8DAB	
1.9A	200V	1/3	24V DC	3A	ECS92K1EAB	ECS92K2EAB	ECS92K4EAB	ECS92K6EAB	ECS92K8EAB	S752L02N3S
	230V	1/3		3A	ECS92K1BAB	ECS92K2BAB	ECS92K4BAB	ECS92K6BAB	ECS92K8BAB	
	460V	3/4		3A	ECS92K1CAB	ECS92K2CAB	ECS92K4CAB	ECS92K6CAB	ECS92K8CAB	
	575V	1		3A	ECS92K1DAB	ECS92K2DAB	ECS92K4DAB	ECS92K6DAB	ECS92K8DAB	
4.4A	200V	3/4	24V DC	7A	ECS92L1EAC	ECS92L2EAC	ECS92L4EAC	ECS92L6EAC	ECS92L8EAC	S752L04N3S
	230V	3/4		7A	ECS92L1BAC	ECS92L2BAC	ECS92L4BAC	ECS92L6BAC	ECS92L8BAC	
	460V	2		7A	ECS92L1CAC	ECS92L2CAC	ECS92L4CAC	ECS92L6CAC	ECS92L8CAC	
	575V	3		7A	ECS92L1DAC	ECS92L2DAC	ECS92L4DAC	ECS92L6DAC	ECS92L8DAC	
9A	200V	2	24V DC	15A	ECS92M1EAD	ECS92M2EAD	ECS92M4EAD	ECS92M6EAD	ECS92M8EAD	S752L09N3S
	230V	2		15A	ECS92M1BAD	ECS92M2BAD	ECS92M4BAD	ECS92M6BAD	ECS92M8BAD	
	460V	5		15A	ECS92M1CAD	ECS92M2CAD	ECS92M4CAD	ECS92M6CAD	ECS92M8CAD	
	575V	5		15A	ECS92M1DAD	ECS92M2DAD	ECS92M4DAD	ECS92M6DAD	ECS92M8DAD	
16A	200V	3	24V DC	15A	ECS92N1EAD	ECS92N2EAD	ECS92N4EAD	ECS92N6EAD	ECS92N8EAD	S752L16N3S
	230V	3		15A	ECS92N1BAD	ECS92N2BAD	ECS92N4BAD	ECS92N6BAD	ECS92N8BAD	
	460V	7-1/2		30A	ECS92N1CAE	ECS92N2CAE	ECS92N4CAE	ECS92N6CAE	ECS92N8CAE	
	575V	10		30A	ECS92N1DAE	ECS92N2DAE	ECS92N4DAE	ECS92N6DAE	ECS92N8DAE	
27A	200V	5	24V DC	30A	ECS92P1EAE	ECS92P2EAE	ECS92P4EAE	ECS92P6EAE	ECS92P8EAE	S752L27N3S
	230V	7-1/2		30A	ECS92P1BAE	ECS92P2BAE	ECS92P4BAE	ECS92P6BAE	ECS92P8BAE	
	460V	15		50A	ECS92P1CAF	ECS92P2CAF	ECS92P4CAF	ECS92P6CAF	ECS92P8CAF	
	575V	20		50A	ECS92P1DAF	ECS92P2DAF	ECS92P4DAF	ECS92P6DAF	ECS92P8DAF	
50A	200V	10	24V DC	100A	ECS92R1EAG	ECS92R2EAG	ECS92R4EAG	ECS92R6EAG	ECS92R8EAG	S752L50N3S
	230V	10		100A	ECS92R1BAG	ECS92R2BAG	ECS92R4BAG	ECS92R6BAG	ECS92R8BAG	
	460V	30		100A	ECS92R1CAG	ECS92R2CAG	ECS92R4CAG	ECS92R6CAG	ECS92R8CAG	
	575V	40		100A	ECS92R1DAG	ECS92R2DAG	ECS92R4DAG	ECS92R6DAG	ECS92R8DAG	

① All *IT.* soft starters are furnished with 24V DC coils and control power supplies. For 24V DC separate control, use Mod Code **C35** and change the 8th digit to **Q** (i.e. ECS90S1EAA becomes ECS90S1QAA-**C35**).

② hp Ratings are based on 40°C Ambient and:
- 25 sec. ramp — 2 starts/hr
- 15 sec. ramp — 4 starts/hr
- 10 sec. ramp — 6 starts/hr
- 7.5 sec. ramp — 8 starts/hr
- 3 sec. ramp — 15 starts/hr

For other ratings, consult your Eaton Representative.

③ These are the Catalog Numbers for Type 4X 304-Grade Stainless Steel, as indicated by the seventh digit **4**. Example: ECS92J4EAA. To order Type 4X 316-Grade Stainless Steel, change that digit to **9**. To order Type 4 Painted Steel, change that digit to **3**. To order Nonmetallic, change that digit to **5**. For details on these Alternate Enclosures, see **Tab 14**.

Cover Control ..... **Page 6-5**
Dimensions ..... **Page 6-16**
Wiring Diagrams ..... **Page 6-17**
Accessories ..... **Page 16-36**
Modifications ..... **Page 16-40**
Technical Data ..... **Page 18-38**

Table 6-11. Class ECS92 — Combination Reduced Voltage Soft-Starter — Circuit Breaker — S801

Amps	Motor Voltage	hp ②③ 1.0 S.F.	Coil Voltage ①	Circuit Breaker Type	Type 1 Catalog Number	Type 3R Catalog Number	Type 4X ④ Catalog Number	Type 7/9 Catalog Number	Type 12 Catalog Number	Component Soft Starter (Open) Catalog Number
Frame Size — 65 mm										
37A	200V	1/2	24V DC	7A	ECS92Q1EAC	ECS92Q2EAC	ECS92Q4EAC	ECS92Q6EAC	ECS92Q8EAC	S801N37N3S
		1		15A	ECS92Q1EAD	ECS92Q2EAD	ECS92Q4EAD	ECS92Q6EAD	ECS92Q8EAD	
		3		30A	ECS92Q1EAE	ECS92Q2EAE	ECS92Q4EAE	ECS92Q6EAE	ECS92Q8EAE	
		10		50A	ECS92Q1EAF	ECS92Q2EAF	ECS92Q4EAF	ECS92Q6EAF	ECS92Q8EAF	
	230V	1	24V DC	7A	ECS92Q1BAC	ECS92Q2BAC	ECS92Q4BAC	ECS92Q6BAC	ECS92Q8BAC	S801N37N3S
		2		15A	ECS92Q1BAD	ECS92Q2BAD	ECS92Q4BAD	ECS92Q6BAD	ECS92Q8BAD	
		3		30A	ECS92Q1BAE	ECS92Q2BAE	ECS92Q4BAE	ECS92Q6BAE	ECS92Q8BAE	
		10		50A	ECS92Q1BAF	ECS92Q2BAF	ECS92Q4BAF	ECS92Q6BAF	ECS92Q8BAF	
	460V	3/4	24V DC	3A	ECS92Q1CAB	ECS92Q2CAB	ECS92Q4CAB	ECS92Q6CAB	ECS92Q8CAB	S801N37N3S
		2		7A	ECS92Q1CAC	ECS92Q2CAC	ECS92Q4CAC	ECS92Q6CAC	ECS92Q8CAC	
		5		15A	ECS92Q1CAD	ECS92Q2CAD	ECS92Q4CAD	ECS92Q6CAD	ECS92Q8CAD	
		10		30A	ECS92Q1CAE	ECS92Q2CAE	ECS92Q4CAE	ECS92Q6CAE	ECS92Q8CAE	
		25		50A	ECS92Q1CAF	ECS92Q2CAF	ECS92Q4CAF	ECS92Q6CAF	ECS92Q8CAF	
	575V	1	24V DC	3A	ECS92Q1DAB	ECS92Q2DAB	ECS92Q4DAB	ECS92Q6DAB	ECS92Q8DAB	S801N37N3S
		3		7A	ECS92Q1DAC	ECS92Q2DAC	ECS92Q4DAC	ECS92Q6DAC	ECS92Q8DAC	
		7-1/2		15A	ECS92Q1DAD	ECS92Q2DAD	ECS92Q4DAD	ECS92Q6DAD	ECS92Q8DAD	
		15		30A	ECS92Q1DAE	ECS92Q2DAE	ECS92Q4DAE	ECS92Q6DAE	ECS92Q8DAE	
		30		50A	ECS92Q1DAF	ECS92Q2DAF	ECS92Q4DAF	ECS92Q6DAF	ECS92Q8DAF	
66A	200V	20	24V DC	100A	ECS92S1EAG	ECS92S2EAG	ECS92S4EAG	ECS92S6EAG	ECS92S8EAG	S801N66N3S
	230V	15	24V DC	70A	ECS92S1BAW	ECS92S2BAW	ECS92S4BAW	ECS92S6BAW	ECS92S8BAW	S801N66N3S
		20		100A	ECS92S1BAG	ECS92S2BAG	ECS92S4BAG	ECS92S6BAG	ECS92S8BAG	
	460V	50	24V DC	100A	ECS92S1CAG	ECS92S2CAG	ECS92S4CAG	ECS92S6CAG	ECS92S8CAG	S801N66N3S
	575V	60	24V DC	100A	ECS92S1DAG	ECS92S2DAG	ECS92S4DAG	ECS92S6DAG	ECS92S8DAG	S801N66N3S
Frame Size — 110 mm										
105A	200V	30	24V DC	150A	ECS92V1EAH	ECS92V2EAH	ECS92V4EAH	ECS92V6EAH	ECS92V8EAH	S801R10N3S
	230V	40	24V DC	150A	ECS92V1BAH	ECS92V2BAH	ECS92V4BAH	ECS92V6BAH	ECS92V8BAH	S801R10N3S
	460V	75	24V DC	150A	ECS92V1CAH	ECS92V2CAH	ECS92V4CAH	ECS92V6CAH	ECS92V8CAH	S801R10N3S
	575V	100	24V DC	150A	ECS92V1DAH	ECS92V2DAH	ECS92V4DAH	ECS92V6DAH	ECS92V8DAH	S801R10N3S
135A	200V	40	24V DC	150A	ECS92W1EAH	ECS92W2EAH	ECS92W4EAH	ECS92W6EAH	ECS92W8EAH	S801R13N3S
	230V	50		150A	ECS92W1BAH	ECS92W2BAH	ECS92W4BAH	ECS92W6BAH	ECS92W8BAH	
	460V	100		150A	ECS92W1CAH	ECS92W2CAH	ECS92W4CAH	ECS92W6CAH	ECS92W8CAH	
	575V	125		150A	ECS92W1DAH	ECS92W2DAH	ECS92W4DAH	ECS92W6DAH	ECS92W8DAH	
Frame Size — 200 mm										
180A	200V	60	24V DC	250A	ECS92Y1EAJ	ECS92Y2EAJ	ECS92Y4EAJ	ECS92Y6EAJ	ECS92Y8EAJ	S801T18N3S
	230V	60		250A	ECS92Y1BAJ	ECS92Y2BAJ	ECS92Y4BAJ	ECS92Y6BAJ	ECS92Y8BAJ	
	460V	150		250A	ECS92Y1CAJ	ECS92Y2CAJ	ECS92Y4CAJ	ECS92Y6CAJ	ECS92Y8CAJ	
	575V	150		250A	ECS92Y1DAJ	ECS92Y2DAJ	ECS92Y4DAJ	ECS92Y6DAJ	ECS92Y8DAJ	
240A	200V	75	24V DC	400A	ECS92Z1EAK	ECS92Z2EAK	ECS92Z4EAK	ECS92Z6EAK	ECS92Z8EAK	S801T24N3S
	230V	75		250A	ECS92Z1BAJ	ECS92Z2BAJ	ECS92Z4BAJ	ECS92Z6BAJ	ECS92Z8BAJ	
	460V	200		400A	ECS92Z1CAK	ECS92Z2CAK	ECS92Z4CAK	ECS92Z6CAK	ECS92Z8CAK	
	575V	200		250A	ECS92Z1DAJ	ECS92Z2DAJ	ECS92Z4DAJ	ECS92Z6DAJ	ECS92Z8DAJ	
304A	200V	100	24V DC	400A	ECS9211EAK	ECS9212EAK	ECS9214EAK	ECS9216EAK	ECS9218EAK	S801T30N3S
	230V	100		400A	ECS9211BAK	ECS9212BAK	ECS9214BAK	ECS9216BAK	ECS9218BAK	
	460V	250		400A	ECS9211CAK	ECS9212CAK	ECS9214CAK	ECS9216CAK	ECS9218CAK	
	575V	300		400A	ECS9211DAK	ECS9212DAK	ECS9214DAK	ECS9216DAK	ECS9218DAK	

① All *IT.* soft starters are furnished with 24V DC coils and control power supplies. For 24V DC separate control, use Mod Code **C35** and change the 8th digit to **Q** (i.e. ECS90S1EAA becomes ECS90S1QAA-**C35**).

② Standard duty horsepower ratings are for 300% ramp current, 30 seconds ramp time, and 3 starts per hour. Consult Eaton for other ratings.

③ Based on 1.0 Service Factor. For 1.15 consult Eaton.

④ These are the Catalog Numbers for Type 4X 304-Grade Stainless Steel, as indicated by the seventh digit **4**. Example: ECS92Q4EAA. To order Type 4X 316-Grade Stainless Steel, change that digit to **9**. To order Type 4 Painted Steel, change that digit to **3**. To order Nonmetallic, change that digit to **5**. For details on these Alternate Enclosures, see **Tab 14**.

Cover Control ..... **Page 6-5**
Dimensions ..... **Page 6-16**
Wiring Diagrams ..... **Page 6-17**
Accessories ..... **Page 16-36**
Modifications ..... **Page 16-40**
Technical Data ..... **Page 18-41**

Table 6-11. Class ECS92 — Combination Reduced Voltage Soft-Starter — Circuit Breaker — S801 (Continued)

Amps	Motor Voltage	hp ②③ 1.0 S.F.	Coil Voltage ①	Circuit Breaker Type	Type 1 Catalog Number	Type 3R Catalog Number	Type 4X ④ Catalog Number	Type 7/9 Catalog Number	Type 12 Catalog Number	Component Soft Starter (Open) Catalog Number
Frame Size — 290 mm										
360A	200V	125	24V DC	HMCP600A	ECS9221EAL	ECS9222EAL	ECS9224EAL	—	ECS9228EAL	S801V36N3S
	230V	150		HMCP400A	ECS9221BAK	ECS9222BAK	ECS9224BAK	—	ECS9228BAK	
	460V	300		HMCP600A	ECS9221CAL	ECS9222CAL	ECS9224CAL	—	ECS9228CAL	
	575V	350		HMCP400A	ECS9221DAK	ECS9222DAK	ECS9224DAK	—	ECS9228DAK	
420A	200V	150	24V DC	HMCP600A	ECS9231EAL	ECS9232EAL	ECS9234EAL	—	ECS9238EAL	S801V42N3S
	460V	350		HMCP600A	ECS9231CAL	ECS9232CAL	ECS9234CAL	—	ECS9238CAL	
	575V	450		HMCP600A	ECS9231DAL	ECS9232DAL	ECS9234DAL	—	ECS9238DAL	
500A	230V	200	24V DC	HMCP600A	ECS9241BAL	ECS9242BAL	ECS9244BAL	—	ECS9248BAL	S801V50N3S
	460V	400		HMCP600A	ECS9241CAL	ECS9242CAL	ECS9244CAL	—	ECS9248CAL	
	575V	500		HMCP600A	ECS9241DAL	ECS9242DAL	ECS9244DAL	—	ECS9248DAL	
650A	200V	200	24V DC	HMCP 1200A	ECS9251EAP	ECS9252EAP	ECS9254EAP	—	ECS9258EAP	S801V65N3S
	230V	250		HMCP 1200A	ECS9251BAP	ECS9252BAP	ECS9254BAP	—	ECS9258BAP	
	460V	450		HMCP600A	ECS9251CAL	ECS9252CAL	ECS9254CAL	—	ECS9258CAL	
	460V	500		HMCP 1200A	ECS9251CAP	ECS9252CAP	ECS9254CAP	—	ECS9258CAP	
	575V	600		HMCP 1200A	ECS9251DAP	ECS9252DAP	ECS9254DAP	—	ECS9258DAP	
720A	230V	300	24V DC	HMCP 1200A	ECS9261BAP	ECS9262BAP	ECS9264BAP	—	ECS9268BAP	S801V72N3S
	460V	600		HMCP 1200A	ECS9261CAP	ECS9262CAP	ECS9264CAP	—	ECS9268CAP	
	575V	700		HMCP 1200A	ECS9261DAP	ECS9262DAP	ECS9264DAP	—	ECS9268DAP	
850A	460V	700	24V DC	HMCP 1200A	ECS9271CAP	ECS9272CAP	ECS9274CAP	—	ECS9278CAP	S801V85N3S
	575V	800		HMCP 1200A	ECS9271DAP	ECS9272DAP	ECS9274DAP	—	ECS9278DAP	
1000A	230V	400	24V DC	RD 1600	ECS9281BAQ	ECS9282BAQ	ECS9284BAQ	—	ECS9288BAQ	S801V10N3S
	460V	800		RD 1600	ECS9281CAQ	ECS9282CAQ	ECS9284CAQ	—	ECS9288CAQ	
	575V	1000		RD 1600	ECS9281DAQ	ECS9282DAQ	ECS9284DAQ	—	ECS9288DAQ	

① All *IT.* soft starters are furnished with 24V DC coils and control power supplies. For 24V DC separate control, use Mod Code **C35** and change the 8th digit to **Q** (i.e. ECS92S1EAF becomes ECS92S1QAF-**C35**).

② Standard duty horsepower ratings are for 300% ramp current, 30 seconds ramp time, and 3 starts per hour. Consult Eaton for other ratings.

③ Based on 1.0 Service Factor. For 1.15 consult Eaton.

④ These are the Catalog Numbers for Type 4X 304-Grade Stainless Steel, as indicated by the seventh digit **4**. Example: ECS92Q4EAA. To order Type 4X 316-Grade Stainless Steel, change that digit to **9**. To order Type 4 Painted Steel, change that digit to **3**. To order Nonmetallic, change that digit to **5**. For details on these Alternate Enclosures, see **Tab 14**.

Cover Control ..... **Page 6-5**
Dimensions ..... **Page 6-16**
Wiring Diagrams ..... **Page 6-17**
Accessories ..... **Page 16-36**
Modifications ..... **Page 16-40**
Technical Data ..... **Page 18-41**

Table 6-12. Class ECS95 — Combination Reduced Voltage Soft-Starter — Circuit Breaker — S811 ⑥

Amps	Motor Voltage	hp ②③ 1.0 S.F.	Coil Voltage ①	Circuit Breaker Type	Type 1 Catalog Number	Type 3R Catalog Number	Type 4X ④ Catalog Number	Type 7/9 Catalog Number	Type 12 Catalog Number	Component Soft Starter (Open) Catalog Number
Frame Size — 65 mm										
37A	200V	1/2	24V DC	7A	ECS95Q1EAC	ECS95Q2EAC	ECS95Q4EAC	ECS95Q6EAC	ECS95Q8EAC	S811N37N3S
		1		15A	ECS95Q1EAD	ECS95Q2EAD	ECS95Q4EAD	ECS95Q6EAD	ECS95Q8EAD	
		3		30A	ECS95Q1EAE	ECS95Q2EAE	ECS95Q4EAE	ECS95Q6EAE	ECS95Q8EAE	
		10		50A	ECS95Q1EAF	ECS95Q2EAF	ECS95Q4EAF	ECS95Q6EAF	ECS95Q8EAF	
	230V	1	24V DC	7A	ECS95Q1BAC	ECS95Q2BAC	ECS95Q4BAC	ECS95Q6BAC	ECS95Q8BAC	S811N37N3S
		2		15A	ECS95Q1BAD	ECS95Q2BAD	ECS95Q4BAD	ECS95Q6BAD	ECS95Q8BAD	
		3		30A	ECS95Q1BAE	ECS95Q2BAE	ECS95Q4BAE	ECS95Q6BAE	ECS95Q8BAE	
		10		50A	ECS95Q1BAF	ECS95Q2BAF	ECS95Q4BAF	ECS95Q6BAF	ECS95Q8BAF	
	460V	3/4	24V DC	3A	ECS95Q1CAB	ECS95Q2CAB	ECS95Q4CAB	ECS95Q6CAB	ECS95Q8CAB	S811N37N3S
		2		7A	ECS95Q1CAC	ECS95Q2CAC	ECS95Q4CAC	ECS95Q6CAC	ECS95Q8CAC	
		5		15A	ECS95Q1CAD	ECS95Q2CAD	ECS95Q4CAD	ECS95Q6CAD	ECS95Q8CAD	
		10		30A	ECS95Q1CAE	ECS95Q2CAE	ECS95Q4CAE	ECS95Q6CAE	ECS95Q8CAE	
		25		50A	ECS95Q1CAF	ECS95Q2CAF	ECS95Q4CAF	ECS95Q6CAF	ECS95Q8CAF	
	575V	1	24V DC	3A	ECS95Q1DAB	ECS95Q2DAB	ECS95Q4DAB	ECS95Q6DAB	ECS95Q8DAB	S811N37N3S
		3		7A	ECS95Q1DAC	ECS95Q2DAC	ECS95Q4DAC	ECS95Q6DAC	ECS95Q8DAC	
		7-1/2		15A	ECS95Q1DAD	ECS95Q2DAD	ECS95Q4DAD	ECS95Q6DAD	ECS95Q8DAD	
		15		30A	ECS95Q1DAE	ECS95Q2DAE	ECS95Q4DAE	ECS95Q6DAE	ECS95Q8DAE	
		30		50A	ECS95Q1DAF	ECS95Q2DAF	ECS95Q4DAF	ECS95Q6DAF	ECS95Q8DAF	
66A	200V	10	24V DC	50A	ECS95S1EAF	ECS95S2EAF	ECS95S4EAF	ECS95S6EAF	ECS95S8EAF	S811N66N3S
		20		100A	ECS95S1EAG	ECS95S2EAG	ECS95S4EAG	ECS95S6EAG	ECS95S8EAG	
	230V	15	24V DC	70A	ECS95S1BAW	ECS95S2BAW	ECS95S4BAW	ECS95S6BAW	ECS95S8BAW	S811N66N3S
		20		100A	ECS95S1BAG	ECS95S2BAG	ECS95S4BAG	ECS95S6BAG	ECS95S8BAG	
	460V	50	24V DC	100A	ECS95S1CAG	ECS95S2CAG	ECS95S4CAG	ECS95S6CAG	ECS95S8CAG	S811N66N3S
	575V	60	24V DC	100A	ECS95S1DAG	ECS95S2DAG	ECS95S4DAG	ECS95S6DAG	ECS95S8DAG	S811N66N3S
Frame Size — 110 mm										
105A	200V	30	24V DC	150A	ECS95V1EAH	ECS95V2EAH	ECS95V4EAH	ECS95V6EAH	ECS95V8EAH	S811R10N3S
	230V	40	24V DC	150A	ECS95V1BAH	ECS95V2BAH	ECS95V4BAH	ECS95V6BAH	ECS95V8BAH	S811R10N3S
	460V	75	24V DC	150A	ECS95V1CAH	ECS95V2CAH	ECS95V4CAH	ECS95V6CAH	ECS95V8CAH	S811R10N3S
	575V	100	24V DC	150A	ECS95V1DAH	ECS95V2DAH	ECS95V4DAH	ECS95V6DAH	ECS95V8DAH	S811R10N3S
135A	200V	40	24V DC	150A	ECS95W1EAH	ECS95W2EAH	ECS95W4EAH	ECS95W6EAH	ECS95W8EAH	S811R13N3S
	230V	50		150A	ECS95W1BAH	ECS95W2BAH	ECS95W4BAH	ECS95W6BAH	ECS95W8BAH	
	460V	100		150A	ECS95W1CAH	ECS95W2CAH	ECS95W4CAH	ECS95W6CAH	ECS95W8CAH	
	575V	125		150A	ECS95W1DAH	ECS95W2DAH	ECS95W4DAH	ECS95W6DAH	ECS95W8DAH	
Frame Size — 200 mm										
180A	200V	60	24V DC	250A	ECS95Y1EAJ	ECS95Y2EAJ	ECS95Y4EAJ	ECS95Y6EAJ	ECS95Y8EAJ	S811T18N3S
	230V	60		250A	ECS95Y1BAJ	ECS95Y2BAJ	ECS95Y4BAJ	ECS95Y6BAJ	ECS95Y8BAJ	
	460V	150		250A	ECS95Y1CAJ	ECS95Y2CAJ	ECS95Y4CAJ	ECS95Y6CAJ	ECS95Y8CAJ	
	575V	150		250A	ECS95Y1DAJ	ECS95Y2DAJ	ECS95Y4DAJ	ECS95Y6DAJ	ECS95Y8DAJ	
240A	200V	75	24V DC	400A	ECS95Z1EAK	ECS95Z2EAK	ECS95Z4EAK	ECS95Z6EAK	ECS95Z8EAK	S811T24N3S
	230V	75		250A	ECS95Z1BAJ	ECS95Z2BAJ	ECS95Z4BAJ	ECS95Z6BAJ	ECS95Z8BAJ	
	460V	200		400A	ECS95Z1CAK	ECS95Z2CAK	ECS95Z4CAK	ECS95Z6CAK	ECS95Z8CAK	
	575V	200		250A	ECS95Z1DAJ	ECS95Z2DAJ	ECS95Z4DAJ	ECS95Z6DAJ	ECS95Z8DAJ	
304A	200V	100	24V DC	400A	ECS9511EAK	ECS9512EAK	ECS9514EAK	ECS9516EAK	ECS9518EAK	S811T30N3S
	230V	100		400A	ECS9511BAK	ECS9512BAK	ECS9514BAK	ECS9516BAK	ECS9518BAK	
	460V	250		400A	ECS9511CAK	ECS9512CAK	ECS9514CAK	ECS9516CAK	ECS9518CAK	
	575V	300		400A	ECS9511DAK	ECS9512DAK	ECS9514DAK	ECS9516DAK	ECS9518DAK	

① All *IT.* soft starters are furnished with 24V DC coils and control power supplies. For 24V DC separate control, use Mod Code **C35** and change the 8th digit to **Q** (i.e. ECS90S1EAA becomes ECS90S1QAA-**C35**).

② Standard duty horsepower ratings are for 300% ramp current, 30 seconds ramp time, and 3 starts per hour. Consult Eaton for other ratings.

③ Based on 1.0 Service Factor. For 1.15 consult Eaton.

④ These are the Catalog Numbers for Type 4X 304-Grade Stainless Steel, as indicated by the seventh digit **4**. Example: ECS95Q4EAC. To order Type 4X 316-Grade Stainless Steel, change that digit to **9**. To order Type 4 Painted Steel, change that digit to **3**. To order Nonmetallic, change that digit to **5**. For details on these Alternate Enclosures, see **Tab 14**.

⑥ Digital Interface Module (DIM) is mounted on door as standard.

Options ..... **Page 6-3**
Cover Control ..... **Page 6-5**
Dimensions ..... **Page 6-16**
Wiring Diagrams ..... **Page 6-17**
Accessories ..... **Page 16-36**
Modifications ..... **Page 16-40**
Technical Data ..... **Page 18-41**

Table 6-12. Class ECS95 — Combination Reduced Voltage Soft-Starter — Circuit Breaker — S811 ⑥ (Continued)

Amps	Motor Voltage	hp ②③ 1.0 S.F.	Coil Voltage ①	Circuit Breaker Type	Type 1 Catalog Number	Type 3R Catalog Number	Type 4X ④ Catalog Number	Type 7/9 Catalog Number	Type 12 Catalog Number	Component Soft Starter (Open) Catalog Number
Frame Size — 290 mm										
360A	200V	125	24V DC	HMCP600A	ECS9521EAL	ECS9522EAL	ECS9524EAL	—	ECS9528EAL	S811V36N3S
	230V	150		HMCP400A	ECS9521BAK	ECS9522BAK	ECS9524BAK	—	ECS9528BAK	
	460V	300		HMCP600A	ECS9521CAL	ECS9522CAL	ECS9524CAL	—	ECS9528CAL	
	575V	350		HMCP400A	ECS9521DAK	ECS9522DAK	ECS9524DAK	—	ECS9528DAK	
420A	200V	150	24V DC	HMCP600A	ECS9531EAL	ECS9532EAL	ECS9534EAL	—	ECS9538EAL	S811V42N3S
	460V	350		HMCP600A	ECS9531CAL	ECS9532CAL	ECS9534CAL	—	ECS9538CAL	
	575V	450		HMCP600A	ECS9531DAL	ECS9532DAL	ECS9534DAL	—	ECS9538DAL	
500A	230V	200	24V DC	HMCP600A	ECS9541BAL	ECS9542BAL	ECS9544BAL	—	ECS9548BAL	S811V50N3S
	460V	400		HMCP600A	ECS9541CAL	ECS9542CAL	ECS9544CAL	—	ECS9548CAL	
	575V	500		HMCP600A	ECS9541DAL	ECS9542DAL	ECS9544DAL	—	ECS9548DAL	
650A	200V	200	24V DC	HMCP 1200A	ECS9551EAP	ECS9552EAP	ECS9554EAP	—	ECS9558EAP	S811V65N3S
	230V	250		HMCP 1200A	ECS9551BAP	ECS9552BAP	ECS9554BAP	—	ECS9558BAP	
	460V	450		HMCP600A	ECS9551CAL	ECS9552CAL	ECS9554CAL	—	ECS9558CAL	
	460V	500		HMCP 1200A	ECS9551CAP	ECS9552CAP	ECS9554CAP	—	ECS9558CAP	
	575V	600		HMCP 1200A	ECS9551DAP	ECS9552DAP	ECS9554DAP	—	ECS9558DAP	
720A	230V	300	24V DC	HMCP 1200A	ECS9561BAP	ECS9562BAP	ECS9564BAP	—	ECS9568BAP	S811V72N3S
	460V	600		HMCP 1200A	ECS9561CAP	ECS9562CAP	ECS9564CAP	—	ECS9568CAP	
	575V	700		HMCP 1200A	ECS9561DAP	ECS9562DAP	ECS9564DAP	—	ECS9568DAP	
850A	460V	700	24V DC	HMCP 1200A	ECS9571CAP	ECS9572CAP	ECS9574CAP	—	ECS9578CAP	S811V85N3S
	575V	800		HMCP 1200A	ECS9571DAP	ECS9572DAP	ECS9574DAP	—	ECS9578DAP	
1000A	230V	400	24V DC	RD 1600	ECS9581BAQ	ECS9582BAQ	ECS9584BAQ	—	ECS9588BAQ	S811V10N3S
	460V	800		RD 1600	ECS9581CAQ	ECS9582CAQ	ECS9584CAQ	—	ECS9588CAQ	
	575V	1000		RD 1600	ECS9581DAQ	ECS9582DAQ	ECS9584DAQ	—	ECS9588DAQ	

① All *IT.* soft starters are furnished with 24V DC coils and control power supplies. For 24V DC separate control, use Mod Code **C35** and change the 8th digit to **Q** (i.e. ECS92S1EAF becomes ECS92S1QAF-**C35**).

② Standard duty horsepower ratings are for 300% ramp current, 30 seconds ramp time, and 3 starts per hour. Consult Eaton for other ratings.

③ Based on 1.0 Service Factor. For 1.15 consult Eaton.

④ These are the Catalog Numbers for Type 4X 304-Grade Stainless Steel, as indicated by the seventh digit **4**. Example: ECS95Q4EAC. To order Type 4X 316-Grade Stainless Steel, change that digit to **9**. To order Type 4 Painted Steel, change that digit to **3**. To order Nonmetallic, change that digit to **5**. For details on these Alternate Enclosures, see **Tab 14**.

⑥ Digital Interface Module (DIM) is mounted on door as standard.

Dimensions

Table 6-13. Minimum Enclosure Box Numbers

Rating	SSRV	Non-combination Box No. ⑥	Combination with Fuses Box No. ⑥	Combination with HMCP Box No. ⑥
.8 – 27A	S752	6A ⑦	B1 ⑧	A1 ⑨
37A	S801/S811	7A	B1	A1 ⑨
50A	S752	6A ⑦	C	A1 ⑨
66A	S801/S811	7A	C	A1 ⑨
105A	S801/S811	7A	D	B1
135A	S801/S811	B1	D	C
180A	S801/S811	C	E	E
240A	S801/S811	G1	F1E	E
304A	S801/S811	G1	F1E	E
360A	S801/S811	G1	F1E	E
420A	S801/S811	10	F1E	E
500A	S801/S811	10	F1E	E
650A	S801/S811	10	F1E	F1E
720A	S801/S811	10	F1E	F1E
850A	S801/S811	10	F1E	F1E
1000A	S801/S811	10	F1E	F1E

⑥ Enclosure space will also accommodate for an *IT.* Power Supply, two 4-pole relays, CPT, and terminal blocks. Also includes space for a DNA module or MOV.

⑦ Same as footnote ⑥, but CPT is not included. Upsize to 7A enclosure to include space for a CPT and a full voltage bypass contactor.

⑧ Enclosure may be reduced to an A1, with all space for all items as in footnote ⑥, excluding relays and CPTs.

⑨ Same as footnote ⑥, but CPT is not included. Upsize to B1 enclosure to include space for a CPT and a full voltage bypass contactor.

Note: See **Tab 15** for Box Dimensions for Type 1, 3R, 4X and 12. See **Page 11-19** for Box Dimensions for Type 7/9.

Options ..... **Page 6-3**
Cover Control ..... **Page 6-5**
Wiring Diagrams ..... **Page 6-17**
Accessories ..... **Page 16-36**
Modifications ..... **Page 16-40**
Technical Data ..... **Page 18-41**

Wiring Diagrams

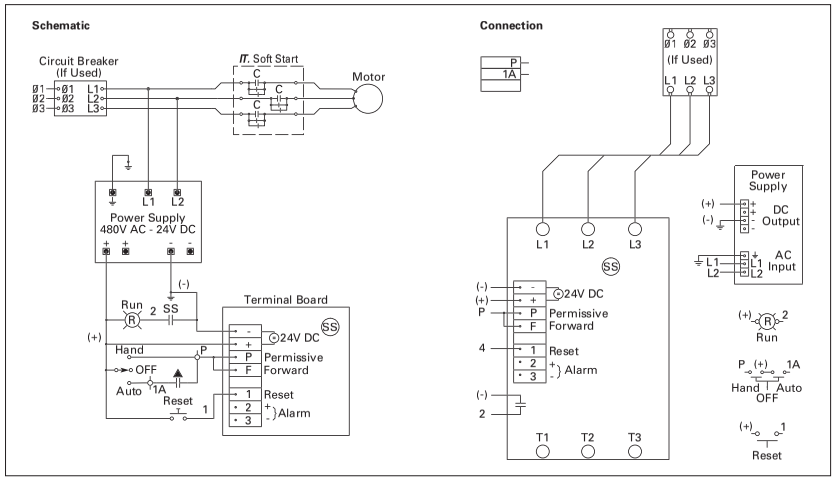

Figure 6-1. S752 Wiring Diagram

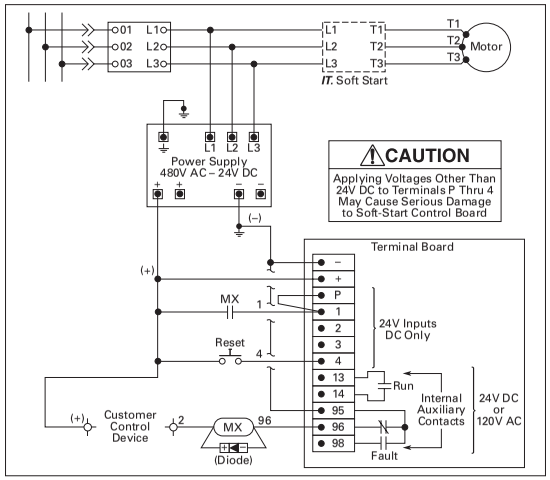

Figure 6-2. S801/S811 Wiring Diagram

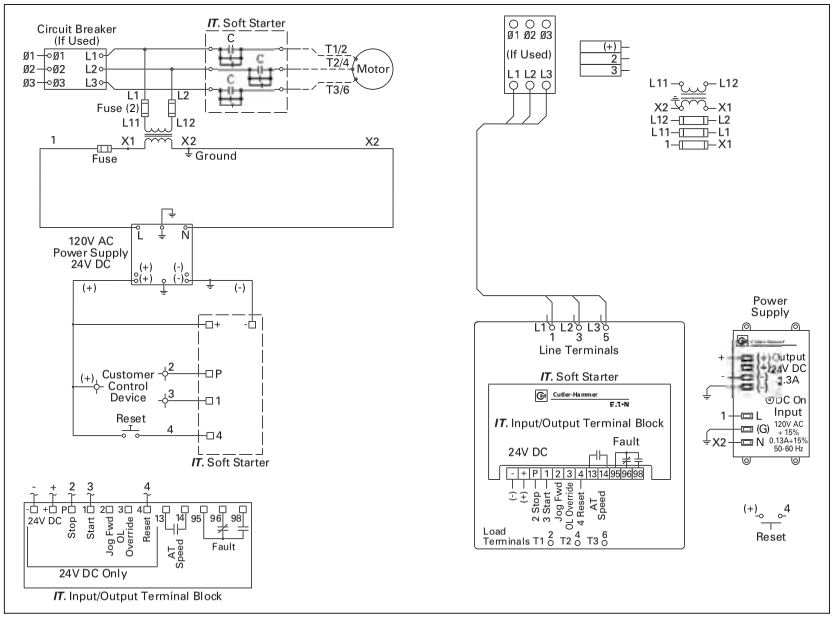

Figure 6-3. S801/S811 with CPT and Power Supply

Catalog Number Selection

Table 6-14. Freedom Reduced Voltage Starters Catalog Numbering System

E C N 4 2 2 1 A A F - __

Design
N = Freedom NEMA

Class	Table
42 = Non-combination Autotransformer Starter	6-18
43 = Combination Autotransformer Starter — Fusible Disconnect	6-19
Combination Autotransformer Starter — Non-fusible Disconnect	6-20
44 = Combination Autotransformer Starter — Circuit Breaker	6-21
45 = Non-combination Part Winding Starter	6-22
46 = Combination Part Winding Starter — Fusible Disconnect	6-23
Combination Part Winding Starter — Non-fusible Disconnect	6-24
47 = Combination Part Winding Starter — Circuit Breaker	6-25
48 = Non-combination Open Transition Wye Delta Starter	6-26
49 = Combination Open Transition Wye Delta Starter — Fusible Disconnect	6-27
Combination Open Transition Wye Delta Starter — Non-fusible Disconnect	6-28
50 = Combination Open Transition Wye Delta Starter — Circuit Breaker	6-29
51 = Non-combination Closed Transition Wye Delta Starter	6-30
52 = Combination Closed Transition Wye Delta Starter — Fusible Disconnect	6-31
Combination Closed Transition Wye Delta Starter — Non-fusible Disconnect	6-32
53 = Combination Closed Transition Wye Delta Starter — Circuit Breaker	6-33
64 = Combination Part Winding Pump Control Starter — Fusible	6-34
65 = Combination Part Winding Pump Control Starter — Circuit Breaker	6-35

NEMA Size
2 = Size 2
3 = Size 3
4 = Size 4
5 = Size 5
6 = Size 6
7 = Size 7
8 = Size 8
9 = Size 9

Enclosure Type
1 = Type 1 — General Purpose
2 = Type 3R — Rainproof
3 = Type 4 — Watertight (Painted Steel)
4 = Type 4X — Watertight (304-Grade Stainless Steel)
5 = Type 4X — Corrosion Resistant (Nonmetallic)
6 = Type 7/9 — Bolted Hazardous Location
7 = Type 7/9 — Threaded Hazardous Location
8 = Type 12 — Dust-Tight
9 = Type 4X — 316-Grade Stainless Steel

Coil Voltage and/or Control Transformers
(See Tables Below)

Cover Control
See **Table 6-17**

Modification Codes
(See **Page 16-40**)

Disconnect Fuse Clip Ratings

A = None	**H** = 200A/250V R	**Q** = 1200A/600V L
B = 30A/250V R	**J** = 200A/600V R	**R** = 1600A/600V L
C = 30A/600V R	**K** = 400A/250V R	**S** = 2000A/600V L
D = 60A/250V R	**L** = 400A/600V R	**T** = by Description
E = 60A/600V R	**M** = 600A/250V R	
F = 100A/250V R	**N** = 600A/600V R	
G = 100A/600V R	**P** = 800A/600V L	

HMCP/E or Breaker Ratings

A = None	**K** = 400A	**5** = 3A ①
B = 3A	**L** = 600A	**6** = 7A ①
C = 7A	**M** = 800A	**7** = 15A ①
D = 15A	**N** = 1000A	**8** = 30A ①
E = 30A	**P** = 1200A	**9** = 50A ①
F = 50A	**Q** = 2000A	**I** = 100A ①
G = 100A	**R** = 3000A	**2** = 70A
H = 150A	**T** = by Description	
J = 250A		

① Use for Sizes 0 – 3, HMCP 600V applications only.

Table 6-15. Magnetic Coil Codes (System Voltage) ②

Code	Magnet Coil	Code	Magnet Coil	Code	Magnet Coil
A	120/60 110/50	**K**	240/50	**U**	24/50
B	240/60 220/50	**L**	380/50	**V**	32/50
C	460/60 440/50	**M**	415/50	**W**	48/60
D	575/60 550/50	**P**	12V DC	**X**	104 – 120/60
E	208/60	**Q**	24V DC	**Y**	48/50
G	550/50	**R**	48V DC	**Z**	By Description
H	277/60	**S**	125V DC		
J	208 – 240/60	**T**	24/60		

② When control power transformer modification codes (**C1** – **C11**) are used or when starter class includes CPT (i.e. ECN07, 18) see table to the right for system voltage code.

Table 6-16. Control Power Transformer Codes (System Voltage)

Code	Primary	Secondary
B	240/480 – 220/440 Wired for 240V	120/60 – 110/50
C	240/480 – 220/440 Wired for 480V	120/60 – 110/50
D	600/60 – 550/50	120/60 – 110/50
E	208/60	120/60
H	277/60	120/60
L	380/50	110/50
M	415/50	110/50
Q	208/60	24
R	240/480 – 220/440 Wired for 240V	24
S	240/480 – 220/440 Wired for 480V	24
T	600/60	24
U	277/60	24
V	380/50	24
W	415/50	24
X	240/480/600 Wired for 480V	120
Y	240/480/600 Wired for 480V	24
Z	By Description	

Cover Control

Non-reversing

Flange Control Kits

For on-the-job conversion of Type 1, 3R, 4X and 12 enclosed starters. Knockouts are provided on the Type 1 flange. Type 3R, 4X and 12 have prepunched holes with removable hole plugs.

Factory Installed Cover Control

To order factory installed pilot devices, change the 9th character of the Catalog Number to the alpha shown in the table to the right. Example: to order an **ECN0514CAA** with START/STOP push-buttons and a red pilot light, change the **A** to a **C**, i.e. ECN0514C**C**A.

Figure 6-4. **Figure 6-5.**

Table 6-17. Non-reversing Cover Control

Description	Factory Installed Flange Control			Field Installation Kits	
	Position 9 Alpha	Type 1 Non-combination ① See Figure 6-4	All Others ② See Figure 6-5	Type 1 Non-combination ① See Figure 6-4	All Others ② See Figure 6-5
				Catalog Number	Catalog Number
No Cover Mounted Pilot Devices	**A**	■	■	**C400GK0**	—
START/STOP Pushbuttons with Red RUN Pilot Light	**B**	■	■	**C400GK1**	**C400T1**
with Red RUN/Green OFF Lights	**C**	■	■	**C400GK12** ③	—
	D	■	■	**C400GK16** ③	—
ON/OFF Pushbuttons with Red RUN Pilot Light	**E**	—	■	—	**C400T2**
with Red RUN/Green OFF Lights	**F**	—	■	—	—
	G	—	■	—	—
HAND/OFF/AUTO Selector Switch with Red RUN Pilot Light	**H**	■	■	**C400GK3**	**C400T12**
with Red RUN/Green OFF Lights	**J**	■	■	**C400GK32** ③	—
	K	■	■	**C400GK36** ③	—
START Pushbutton	**L**	—	■	—	**C400T3**
ON Pushbutton	**M**	—	■	—	**C400T4**
OFF Pushbutton	**N**	—	■	—	**C400T5**
Red RUN Pilot Light	**P**	■	■	**C400GK42** ③	**C400T9** ③
Green OFF	**Q**	■	■	**C400GK41** ③	**C400T10** ③
Red RUN/Green OFF Pilot Lights	**R**	■	■	**C400GK46** ③	**C400T11** ③
START/STOP Selector Switch with Red RUN Pilot Light	**S**	—	■	—	**C400T13**
with Red RUN/Green OFF Lights	**T**	—	■	—	—
	U	—	■	—	—
ON/OFF Selector Switch with Red RUN Pilot Light	**V**	—	■	—	**C400T14**
with Red RUN/Green OFF Lights	**W**	—	■	—	—
	X	—	■	—	—

① Type 1, NEMA Sizes 00 – 4 Non-combination ONLY.
② Type 1, NEMA Sizes 5 – 9 Non-combination PLUS all Type 3R, 4X, 12 Non-combination PLUS all Combination — NEMA Sizes only.
③ Add Code Letter from the table below to Catalog Number for voltage — Kits only. Example: C400T9**B**.

Rating	Code Letter	Rating	Code Letter	Rating	Code Letter
120V 60 Hz	**A**	240V 60 Hz	**B**	480V 60 Hz	**C**
208V 60 Hz	**E**	380V 50 Hz	**L**	600V 60 Hz	**D**

Standards and Certifications

Note: See **Page 18-2** for additional information on Standards and Certifications that apply to all Cutler-Hammer Enclosed Control products.

- UL Listed
- cUL (indicates appropriate CSA Standard investigation)
- ABS Type Approved

Features

- Non-combination and Combination Designs
- 3-Phase Magnetic, 3-Pole
- Interchangeable Heater OLR
- 600V Maximum

Product Selection

Table 6-18. Class ECN42 — Non-combination Autotransformer Starter

NEMA Size	Motor Voltage	hp Rating	Magnet Coil Voltage ①	Type 1 General Purpose	Type 3R Rainproof	Type 4 Water & Dust-Tight Painted Steel	Type 12 Dust-Tight Industrial External Reset ②
				Catalog Number	Catalog Number	Catalog Number	Catalog Number
2 (45A)	200	10	120	ECN4221EAA-A8/B1	ECN4222EAA-A8/B1	ECN4223EAA-A8/B1	ECN4228EAA-A8/B1
	230	10 15		ECN4221BAA-A8/B2 ECN4221BAA-A8/B7	ECN4222BAA-A8/B2 ECN4222BAA-A8/B7	ECN4223BAA-A8/B2 ECN4223BAA-A8/B7	ECN4228BAA-A8/B2 ECN4228BAA-A8/B7
	460	10 15 20 25		ECN4221CAA-A8/B4 ECN4221CAA-A8/B9 ECN4221CAA-A8/B14 ECN4221CAA-A8/B19	ECN4222CAA-A8/B4 ECN4222CAA-A8/B9 ECN4222CAA-A8/B14 ECN4222CAA-A8/B19	ECN4223CAA-A8/B4 ECN4223CAA-A8/B9 ECN4223CAA-A8/B14 ECN4223CAA-A8/B19	ECN4228CAA-A8/B4 ECN4228CAA-A8/B9 ECN4228CAA-A8/B14 ECN4228CAA-A8/B19
	575	10 15 20 25		ECN4221DAA-A8/B5 ECN4221DAA-A8/B10 ECN4221DAA-A8/B15 ECN4221DAA-A8/B20	ECN4222DAA-A8/B5 ECN4222DAA-A8/B10 ECN4222DAA-A8/B15 ECN4222DAA-A8/B20	ECN4223DAA-A8/B5 ECN4223DAA-A8/B10 ECN4223DAA-A8/B15 ECN4223DAA-A8/B20	ECN4228DAA-A8/B5 ECN4228DAA-A8/B10 ECN4228DAA-A8/B15 ECN4228DAA-A8/B20
3 (90A)	200	15 20 25	120	ECN4231EAA-A8/B6 ECN4231EAA-A8/B11 ECN4231EAA-A8/B16	ECN4232EAA-A8/B6 ECN4232EAA-A8/B11 ECN4232EAA-A8/B16	ECN4233EAA-A8/B6 ECN4233EAA-A8/B11 ECN4233EAA-A8/B16	ECN4238EAA-A8/B6 ECN4238EAA-A8/B11 ECN4238EAA-A8/B16
	230	20 25 30		ECN4231BAA-A8/B12 ECN4231BAA-A8/B17 ECN4231BAA-A8/B22	ECN4232BAA-A8/B12 ECN4232BAA-A8/B17 ECN4232BAA-A8/B22	ECN4233BAA-A8/B12 ECN4233BAA-A8/B17 ECN4233BAA-A8/B22	ECN4238BAA-A8/B12 ECN4238BAA-A8/B17 ECN4238BAA-A8/B22
	460	30 40 50		ECN4231CAA-A8/B24 ECN4231CAA-A8/B29 ECN4231CAA-A8/B34	ECN4232CAA-A8/B24 ECN4232CAA-A8/B29 ECN4232CAA-A8/B34	ECN4233CAA-A8/B24 ECN4233CAA-A8/B29 ECN4233CAA-A8/B34	ECN4238CAA-A8/B24 ECN4238CAA-A8/B29 ECN4238CAA-A8/B34
	575	30 40 50		ECN4231DAA-A8/B25 ECN4231DAA-A8/B30 ECN4231DAA-A8/B35	ECN4232DAA-A8/B25 ECN4232DAA-A8/B30 ECN4232DAA-A8/B35	ECN4233DAA-A8/B25 ECN4233DAA-A8/B30 ECN4233DAA-A8/B35	ECN4238DAA-A8/B25 ECN4238DAA-A8/B30 ECN4238DAA-A8/B35
4 (135A)	200	30 40	120	ECN4241EAA-A8/B21 ECN4241EAA-A8/B26	ECN4242EAA-A8/B21 ECN4242EAA-A8/B26	ECN4243EAA-A8/B21 ECN4243EAA-A8/B26	ECN4248EAA-A8/B21 ECN4248EAA-A8/B26
	230	40 50		ECN4241BAA-A8/B27 ECN4241BAA-A8/B32	ECN4242BAA-A8/B27 ECN4242BAA-A8/B32	ECN4243BAA-A8/B27 ECN4243BAA-A8/B32	ECN4248BAA-A8/B27 ECN4248BAA-A8/B32
	460	75 100		ECN4241CAA-A8/B39 ECN4241CAA-A8/B44	ECN4242CAA-A8/B39 ECN4242CAA-A8/B44	ECN4243CAA-A8/B39 ECN4243CAA-A8/B44	ECN4248CAA-A8/B39 ECN4248CAA-A8/B44
	575	75 100		ECN4241DAA-A8/B40 ECN4241DAA-A8/B45	ECN4242DAA-A8/B40 ECN4242DAA-A8/B45	ECN4243DAA-A8/B40 ECN4243DAA-A8/B45	ECN4248DAA-A8/B40 ECN4248DAA-A8/B45
5 (270A)	200	50 75	120	ECN4251EAA-A8/B31 ECN4251EAA-A8/B36	ECN4252EAA-A8/B31 ECN4252EAA-A8/B36	ECN4253EAA-A8/B31 ECN4253EAA-A8/B36	ECN4258EAA-A8/B31 ECN4258EAA-A8/B36
	230	75 100		ECN4251BAA-A8/B37 ECN4251BAA-A8/B42	ECN4252BAA-A8/B37 ECN4252BAA-A8/B42	ECN4253BAA-A8/B37 ECN4253BAA-A8/B42	ECN4258BAA-A8/B37 ECN4258BAA-A8/B42
	460	125 150 200		ECN4251CAA-A8/B49 ECN4251CAA-A8/B54 ECN4251CAA-A8/B59	ECN4252CAA-A8/B49 ECN4252CAA-A8/B54 ECN4252CAA-A8/B59	ECN4253CAA-A8/B49 ECN4253CAA-A8/B54 ECN4253CAA-A8/B59	ECN4258CAA-A8/B49 ECN4258CAA-A8/B54 ECN4258CAA-A8/B59
	575	125 150 200		ECN4251DAA-A8/B50 ECN4251DAA-A8/B55 ECN4251DAA-A8/B60	ECN4252DAA-A8/B50 ECN4252DAA-A8/B55 ECN4252DAA-A8/B60	ECN4253DAA-A8/B50 ECN4253DAA-A8/B55 ECN4253DAA-A8/B60	ECN4258DAA-A8/B50 ECN4258DAA-A8/B55 ECN4258DAA-A8/B60

Starters do not include heater packs. Select 1 carton of 3 heater packs. Heater Pack Selection, **Page 16-6**.

① All reduced voltage starters are furnished with 120V coils and control transformer connected for 120V secondary. If Modification Code **C35** separate control is specified, the control transformer is omitted.

② All Type 12 enclosures are standardized with external reset. For internal reset, order Modification Code **R5**.

Cover Control ..... **Page 6-20**
Other Magnet Coils ..... **Page 6-19**
Dimensions ..... **Page 15-8**
Accessories ..... **Page 16-4**
Modifications ..... **Page 16-40**
Technical Data ..... **Page 18-7**

Table 6-18. Class ECN42 — Non-combination Autotransformer Starter (Continued)

NEMA Size	Motor Voltage	hp Rating	Magnet Coil Voltage ①	Type 1 General Purpose	Type 3R Rainproof	Type 4 Water & Dust-Tight Painted Steel	Type 12 Dust-Tight Industrial External Reset ②
				Catalog Number	Catalog Number	Catalog Number	Catalog Number
6 (540A)	200	100 125 150	120	ECN4261EAA-A8/B41 ECN4261EAA-A8/B46 ECN4261EAA-A8/B51	ECN4262EAA-A8/B41 ECN4262EAA-A8/B46 ECN4262EAA-A8/B51	ECN4263EAA-A8/B41 ECN4263EAA-A8/B46 ECN4263EAA-A8/B51	ECN4268EAA-A8/B41 ECN4268EAA-A8/B46 ECN4268EAA-A8/B51
	230	125 150 200		ECN4261BAA-A8/B47 ECN4261BAA-A8/B52 ECN4261BAA-A8/B57	ECN4262BAA-A8/B47 ECN4262BAA-A8/B52 ECN4262BAA-A8/B57	ECN4263BAA-A8/B47 ECN4263BAA-A8/B52 ECN4263BAA-A8/B57	ECN4268BAA-A8/B47 ECN4268BAA-A8/B52 ECN4268BAA-A8/B57
	460	250 300 400		ECN4261CAA-A8/B64 ECN4261CAA-A8/B69 ECN4261CAA-A8/B74	ECN4262CAA-A8/B64 ECN4262CAA-A8/B69 ECN4262CAA-A8/B74	ECN4263CAA-A8/B64 ECN4263CAA-A8/B69 ECN4263CAA-A8/B74	ECN4268CAA-A8/B64 ECN4268CAA-A8/B69 ECN4268CAA-A8/B74
	575	250 300 400		ECN4261DAA-A8/B65 ECN4261DAA-A8/B70 ECN4261DAA-A8/B75	ECN4262DAA-A8/B65 ECN4262DAA-A8/B70 ECN4262DAA-A8/B75	ECN4263DAA-A8/B65 ECN4263DAA-A8/B70 ECN4263DAA-A8/B75	ECN4268DAA-A8/B65 ECN4268DAA-A8/B70 ECN4268DAA-A8/B75
7 (810A)	230	250 300	120	ECN4271BAA-A8/B62 ECN4271BAA-A8/B67	ECN4272BAA-A8/B62 ECN4272BAA-A8/B67	ECN4273BAA-A8/B62 ECN4273BAA-A8/B67	ECN4278BAA-A8/B62 ECN4278BAA-A8/B67
	460	450 500 600		ECN4271CAA-A8/B78 ECN4271CAA-A8/B81 ECN4271CAA-A8/B84	ECN4272CAA-A8/B78 ECN4272CAA-A8/B81 ECN4272CAA-A8/B84	ECN4273CAA-A8/B78 ECN4273CAA-A8/B81 ECN4273CAA-A8/B84	ECN4278CAA-A8/B78 ECN4278CAA-A8/B81 ECN4278CAA-A8/B84
	575	450 500 600		ECN4271DAA-A8/B79 ECN4271DAA-A8/B82 ECN4271DAA-A8/B85	ECN4272DAA-A8/B79 ECN4272DAA-A8/B82 ECN4272DAA-A8/B85	ECN4273DAA-A8/B79 ECN4273DAA-A8/B82 ECN4273DAA-A8/B85	ECN4278DAA-A8/B79 ECN4278DAA-A8/B82 ECN4278DAA-A8/B85
8 (1215A)	230	400 450	120	ECN4281BAA-A8/B72 ECN4281BAA-A8/B76	ECN4282BAA-A8/B72 ECN4282BAA-A8/B76	ECN4283BAA-A8/B72 ECN4283BAA-A8/B76	ECN4288BAA-A8/B72 ECN4288BAA-A8/B76
	460	700 800 900		ECN4281CAA-A8/B87 ECN4281CAA-A8/B91 ECN4281CAA-A8/B94	ECN4282CAA-A8/B87 ECN4282CAA-A8/B91 ECN4282CAA-A8/B94	ECN4283CAA-A8/B87 ECN4283CAA-A8/B91 ECN4283CAA-A8/B94	ECN4288CAA-A8/B87 ECN4288CAA-A8/B91 ECN4288CAA-A8/B94
	575	700 800 900		ECN4281DAA-A8/B88 ECN4281DAA-A8/B92 ECN4281DAA-A8/B95	ECN4282DAA-A8/B88 ECN4282DAA-A8/B92 ECN4282DAA-A8/B95	ECN4283DAA-A8/B88 ECN4283DAA-A8/B92 ECN4283DAA-A8/B95	ECN4288DAA-A8/B88 ECN4288DAA-A8/B92 ECN4288DAA-A8/B95
9 (2250A)	230	800	120	ECN4291BAA-A8/B89	ECN4292BAA-A8/B89	ECN4293BAA-A8/B89	ECN4298BAA-A8/B89
	460	1600		ECN4291CAA-A8/B96	ECN4292CAA-A8/B96	ECN4293CAA-A8/B96	ECN4298CAA-A8/B96
	575	1600		ECN4291DAA-A8/B97	ECN4292DAA-A8/B97	ECN4293DAA-A8/B97	ECN4298DAA-A8/B97

Starters do not include heater packs. Select 1 carton of 3 heater packs. Heater Pack Selection, **Page 16-6**.

① All reduced voltage starters are furnished with 120V coils and control transformer connected for 120V secondary. If Modification Code **C35** separate control is specified, the control transformer is omitted.

② All Type 12 enclosures are standardized with external reset. For internal reset, order Modification Code **R5**.

Cover Control ..... **Page 6-20**
Other Magnet Coils ..... **Page 6-19**
Dimensions ..... **Page 15-8**
Accessories ..... **Page 16-4**
Modifications ..... **Page 16-40**
Technical Data ..... **Page 18-7**

Table 6-19. Class ECN43 — Combination Autotransformer Starter — Fusible Disconnect

Motor Voltage	hp Rating	Magnet Coil Voltage ①	Fuse Clip Amp.	Type 1 General Purpose	Type 3R Rainproof	Type 4 Water & Dust-Tight Painted Steel	Type 12 Dust-Tight Industrial External Reset ②③
				Catalog Number	Catalog Number	Catalog Number	Catalog Number
NEMA Size 2 (45A)							
200	10	120	60A	ECN4321EAD-A8/B1	ECN4322EAD-A8/B1	ECN4323EAD-A8/B1	ECN4328EAD-A8/B1
230	10 15			ECN4321BAD-A8/B2 ECN4321BAD-A8/B7	ECN4322BAD-A8/B2 ECN4322BAD-A8/B7	ECN4323BAD-A8/B2 ECN4323BAD-A8/B7	ECN4328BAD-A8/B2 ECN4328BAD-A8/B7
460	10 15 20 25			ECN4321CAE-A8/B4 ECN4321CAE-A8/B9 ECN4321CAE-A8/B14 ECN4321CAE-A8/B19	ECN4322CAE-A8/B4 ECN4322CAE-A8/B9 ECN4322CAE-A8/B14 ECN4322CAE-A8/B19	ECN4323CAE-A8/B4 ECN4323CAE-A8/B9 ECN4323CAE-A8/B14 ECN4323CAE-A8/B19	ECN4328CAE-A8/B4 ECN4328CAE-A8/B9 ECN4328CAE-A8/B14 ECN4328CAE-A8/B19
575	10 15 20 25			ECN4321DAE-A8/B5 ECN4321DAE-A8/B10 ECN4321DAE-A8/B15 ECN4321DAE-A8/B20	ECN4322DAE-A8/B5 ECN4322DAE-A8/B10 ECN4322DAE-A8/B15 ECN4322DAE-A8/B20	ECN4323DAE-A8/B5 ECN4323DAE-A8/B10 ECN4323DAE-A8/B15 ECN4323DAE-A8/B20	ECN4328DAE-A8/B5 ECN4328DAE-A8/B10 ECN4328DAE-A8/B15 ECN4328DAE-A8/B20
NEMA Size 3 (90A)							
200	15 20 25	120	100A	ECN4331EAF-A8/B6 ECN4331EAF-A8/B11 ECN4331EAF-A8/B16	ECN4332EAF-A8/B6 ECN4332EAF-A8/B11 ECN4332EAF-A8/B16	ECN4333EAF-A8/B6 ECN4333EAF-A8/B11 ECN4333EAF-A8/B16	ECN4338EAF-A8/B6 ECN4338EAF-A8/B11 ECN4338EAF-A8/B16
230	20 25 30			ECN4331BAF-A8/B12 ECN4331BAF-A8/B17 ECN4331BAF-A8/B22	ECN4332BAF-A8/B12 ECN4332BAF-A8/B17 ECN4332BAF-A8/B22	ECN4333BAF-A8/B12 ECN4333BAF-A8/B17 ECN4333BAF-A8/B22	ECN4338BAF-A8/B12 ECN4338BAF-A8/B17 ECN4338BAF-A8/B22
460	30 40 50			ECN4331CAG-A8/B24 ECN4331CAG-A8/B29 ECN4331CAG-A8/B34	ECN4332CAG-A8/B24 ECN4332CAG-A8/B29 ECN4332CAG-A8/B34	ECN4333CAG-A8/B24 ECN4333CAG-A8/B29 ECN4333CAG-A8/B34	ECN4338CAG-A8/B24 ECN4338CAG-A8/B29 ECN4338CAG-A8/B34
575	30 40 50			ECN4331DAG-A8/B25 ECN4331DAG-A8/B30 ECN4331DAG-A8/B35	ECN4332DAG-A8/B25 ECN4332DAG-A8/B30 ECN4332DAG-A8/B35	ECN4333DAG-A8/B25 ECN4333DAG-A8/B30 ECN4333DAG-A8/B35	ECN4338DAG-A8/B25 ECN4338DAG-A8/B30 ECN4338DAG-A8/B35
NEMA Size 4 (135A)							
200	30 40	120	200A	ECN4341EAH-A8/B21 ECN4341EAH-A8/B26	ECN4342EAH-A8/B21 ECN4342EAH-A8/B26	ECN4343EAH-A8/B21 ECN4343EAH-A8/B26	ECN4348EAH-A8/B21 ECN4348EAH-A8/B26
230	40 50			ECN4341BAH-A8/B27 ECN4341BAH-A8/B32	ECN4342BAH-A8/B27 ECN4342BAH-A8/B32	ECN4343BAH-A8/B27 ECN4343BAH-A8/B32	ECN4348BAH-A8/B27 ECN4348BAH-A8/B32
460	75 100			ECN4341CAJ-A8/B39 ECN4341CAJ-A8/B44	ECN4342CAJ-A8/B39 ECN4342CAJ-A8/B44	ECN4343CAJ-A8/B39 ECN4343CAJ-A8/B44	ECN4348CAJ-A8/B39 ECN4348CAJ-A8/B44
575	75 100			ECN4341DAJ-A8/B40 ECN4341DAJ-A8/B45	ECN4342DAJ-A8/B40 ECN4342DAJ-A8/B45	ECN4343DAJ-A8/B40 ECN4343DAJ-A8/B45	ECN4348DAJ-A8/B40 ECN4348DAJ-A8/B45
NEMA Size 5 (270A)							
200	50 75	120	400A	ECN4351EAK-A8/B31 ECN4351EAK-A8/B36	ECN4352EAK-A8/B31 ECN4352EAK-A8/B36	ECN4353EAK-A8/B31 ECN4353EAK-A8/B36	ECN4358EAK-A8/B31 ECN4358EAK-A8/B36
230	75 100			ECN4351BAK-A8/B37 ECN4351BAK-A8/B42	ECN4352BAK-A8/B37 ECN4352BAK-A8/B42	ECN4353BAK-A8/B37 ECN4353BAK-A8/B42	ECN4358BAK-A8/B37 ECN4358BAK-A8/B42
460	125 150 200			ECN4351CAL-A8/B49 ECN4351CAL-A8/B54 ECN4351CAL-A8/B59	ECN4352CAL-A8/B49 ECN4352CAL-A8/B54 ECN4352CAL-A8/B59	ECN4353CAL-A8/B49 ECN4353CAL-A8/B54 ECN4353CAL-A8/B59	ECN4358CAL-A8/B49 ECN4358CAL-A8/B54 ECN4358CAL-A8/B59
575	125 150 200			ECN4351DAL-A8/B50 ECN4351DAL-A8/B55 ECN4351DAL-A8/B60	ECN4352DAL-A8/B50 ECN4352DAL-A8/B55 ECN4352DAL-A8/B60	ECN4353DAL-A8/B50 ECN4353DAL-A8/B55 ECN4353DAL-A8/B60	ECN4358DAL-A8/B50 ECN4358DAL-A8/B55 ECN4358DAL-A8/B60
Starters do not include heater packs. Select 1 carton of 3 heater packs. Heater Pack Selection, **Page 16-6**.							

① All reduced voltage starters are furnished with 120V coils and control transformer connected for 120V secondary. If Modification Code **C35** separate control is specified, the control transformer is omitted.

② All Type 12 enclosures are standardized with external reset. For internal reset, order Modification Code **R5**.

③ Type 12 enclosure is without safety door lock.

Cover Control ..... **Page 6-20**
Other Magnet Coils ..... **Page 6-19**
Dimensions ..... **Page 15-8**
Accessories ..... **Page 16-4**
Modifications ..... **Page 16-40**
Technical Data ..... **Page 18-7**

Table 6-19. Class ECN43 — Combination Autotransformer Starter — Fusible Disconnect (Continued)

Motor Voltage	hp Rating	Magnet Coil Voltage ①	Fuse Clip Amp.	Type 1 General Purpose	Type 3R Rainproof	Type 4 Water & Dust-Tight Painted Steel	Type 12 Dust-Tight Industrial External Reset ②③
				Catalog Number	Catalog Number	Catalog Number	Catalog Number
NEMA Size 6 (540A)							
200	100 125 150	120	600A	ECN4361EAM-A8/B41 ECN4361EAM-A8/B46 ECN4361EAM-A8/B51	ECN4362EAM-A8/B41 ECN4362EAM-A8/B46 ECN4362EAM-A8/B51	ECN4363EAM-A8/B41 ECN4363EAM-A8/B46 ECN4363EAM-A8/B51	ECN4368EAM-A8/B41 ECN4368EAM-A8/B46 ECN4368EAM-A8/B51
230	125 150 200			ECN4361BAM-A8/B47 ECN4361BAM-A8/B52 ECN4361BAM-A8/B57	ECN4362BAM-A8/B47 ECN4362BAM-A8/B52 ECN4362BAM-A8/B57	ECN4363BAM-A8/B47 ECN4363BAM-A8/B52 ECN4363BAM-A8/B57	ECN4368BAM-A8/B47 ECN4368BAM-A8/B52 ECN4368BAM-A8/B57
460	250 300 400			ECN4361CAN-A8/B64 ECN4361CAN-A8/B69 ECN4361CAN-A8/B74	ECN4362CAN-A8/B64 ECN4362CAN-A8/B69 ECN4362CAN-A8/B74	ECN4363CAN-A8/B64 ECN4363CAN-A8/B69 ECN4363CAN-A8/B74	ECN4368CAN-A8/B64 ECN4368CAN-A8/B69 ECN4368CAN-A8/B74
575	250 300 400			ECN4361DAN-A8/B65 ECN4361DAN-A8/B70 ECN4361DAN-A8/B75	ECN4362DAN-A8/B65 ECN4362DAN-A8/B70 ECN4362DAN-A8/B75	ECN4363DAN-A8/B65 ECN4363DAN-A8/B70 ECN4363DAN-A8/B75	ECN4368DAN-A8/B65 ECN4368DAN-A8/B70 ECN4368DAN-A8/B75
NEMA Size 7 (810A)							
230	250 300	120	④	ECN4371BAU-A8/B62 ECN4371BAU-A8/B67	ECN4372BAU-A8/B62 ECN4372BAU-A8/B67	ECN4373BAU-A8/B62 ECN4373BAU-A8/B67	ECN4378BAU-A8/B62 ECN4378BAU-A8/B67
460	450 500 600			ECN4371CAU-A8/B78 ECN4371CAU-A8/B81 ECN4371CAU-A8/B84	ECN4372CAU-A8/B78 ECN4372CAU-A8/B81 ECN4372CAU-A8/B84	ECN4373CAU-A8/B78 ECN4373CAU-A8/B81 ECN4373CAU-A8/B84	ECN4378CAU-A8/B78 ECN4378CAU-A8/B81 ECN4378CAU-A8/B84
575	450 500 600			ECN4371DAU-A8/B79 ECN4371DAU-A8/B82 ECN4371DAU-A8/B85	ECN4372DAU-A8/B79 ECN4372DAU-A8/B82 ECN4372DAU-A8/B85	ECN4373DAU-A8/B79 ECN4373DAU-A8/B82 ECN4373DAU-A8/B85	ECN4378DAU-A8/B79 ECN4378DAU-A8/B82 ECN4378DAU-A8/B85
NEMA Size 8 (1215A)							
230	400 450	120	④	ECN4381BAU-A8/B72 ECN4381BAU-A8/B76	ECN4382BAU-A8/B72 ECN4382BAU-A8/B76	ECN4383BAU-A8/B72 ECN4383BAU-A8/B76	ECN4388BAU-A8/B72 ECN4388BAU-A8/B76
460	700 800 900			ECN4381CAU-A8/B87 ECN4381CAU-A8/B91 ECN4381CAU-A8/B94	ECN4382CAU-A8/B87 ECN4382CAU-A8/B91 ECN4382CAU-A8/B94	ECN4383CAU-A8/B87 ECN4383CAU-A8/B91 ECN4383CAU-A8/B94	ECN4388CAU-A8/B87 ECN4388CAU-A8/B91 ECN4388CAU-A8/B94
575	700 800 900			ECN4381DAU-A8/B88 ECN4381DAU-A8/B92 ECN4381DAU-A8/B95	ECN4382DAU-A8/B88 ECN4382DAU-A8/B92 ECN4382DAU-A8/B95	ECN4383DAU-A8/B88 ECN4383DAU-A8/B92 ECN4383DAU-A8/B95	ECN4388DAU-A8/B88 ECN4388DAU-A8/B92 ECN4388DAU-A8/B95
NEMA Size 9 (2250A)							
230	800	120	④	ECN4391BAU-A8/B89	ECN4392BAU-A8/B89	ECN4393BAU-A8/B89	ECN4398BAU-A8/B89
460	1600			ECN4391CAU-A8/B96	ECN4392CAU-A8/B96	ECN4393CAU-A8/B96	ECN4398CAU-A8/B96
575	1600			ECN4391DAU-A8/B97	ECN4392DAU-A8/B97	ECN4393DAU-A8/B97	ECN4398DAU-A8/B97
Starters do not include heater packs. Select 1 carton of 3 heater packs. Heater Pack Selection, **Page 16-6**.							

① All reduced voltage starters are furnished with 120V coils and control transformer connected for 120V secondary. If Modification Code **C35** separate control is specified, the control transformer is omitted.

② All Type 12 enclosures are standardized with external reset. For internal reset, order Modification Code **R5**.

③ Type 12 enclosure is without safety door interlock.

④ Supply hp, voltage, FLA and whether motor is design E or not when ordering the starter.

Cover Control ..... **Page 6-20**
Other Magnet Coils ..... **Page 6-19**
Dimensions ..... **Page 15-8**
Accessories ..... **Page 16-4**
Modifications ..... **Page 16-40**
Technical Data ..... **Page 18-7**

Table 6-20. Class ECN43 — Combination Autotransformer Starter — Non-fusible Disconnect

Motor Voltage	hp Rating	Magnet Coil Voltage ①	Dis-connect Amps.	Type 1 General Purpose	Type 3R Rainproof	Type 4 Water & Dust-Tight Painted Steel	Type 12 Dust-Tight Industrial External Reset ②③
				Catalog Number	Catalog Number	Catalog Number	Catalog Number
NEMA Size 2 (45A)							
200	10	120	60A	ECN4321EAA-A8/B1	ECN4322EAA-A8/B1	ECN4323EAA-A8/B1	ECN4328EAA-A8/B1
230	10 15			ECN4321BAA-A8/B2 ECN4321BAA-A8/B7	ECN4322BAA-A8/B2 ECN4322BAA-A8/B7	ECN4323BAA-A8/B2 ECN4323BAA-A8/B7	ECN4328BAA-A8/B2 ECN4328BAA-A8/B7
460	10 15 20 25			ECN4321CAA-A8/B4 ECN4321CAA-A8/B9 ECN4321CAA-A8/B14 ECN4321CAA-A8/B19	ECN4322CAA-A8/B4 ECN4322CAA-A8/B9 ECN4322CAA-A8/B14 ECN4322CAA-A8/B19	ECN4323CAA-A8/B4 ECN4323CAA-A8/B9 ECN4323CAA-A8/B14 ECN4323CAA-A8/B19	ECN4328CAA-A8/B4 ECN4328CAA-A8/B9 ECN4328CAA-A8/B14 ECN4328CAA-A8/B19
575	10 15 20 25			ECN4321DAA-A8/B5 ECN4321DAA-A8/B10 ECN4321DAA-A8/B15 ECN4321DAA-A8/B20	ECN4322DAA-A8/B5 ECN4322DAA-A8/B10 ECN4322DAA-A8/B15 ECN4322DAA-A8/B20	ECN4323DAA-A8/B5 ECN4323DAA-A8/B10 ECN4323DAA-A8/B15 ECN4323DAA-A8/B20	ECN4328DAA-A8/B5 ECN4328DAA-A8/B10 ECN4328DAA-A8/B15 ECN4328DAA-A8/B20
NEMA Size 3 (90A)							
200	15 20 25	120	100A	ECN4331EAA-A8/B6 ECN4331EAA-A8/B11 ECN4331EAA-A8/B16	ECN4332EAA-A8/B6 ECN4332EAA-A8/B11 ECN4332EAA-A8/B16	ECN4333EAA-A8/B6 ECN4333EAA-A8/B11 ECN4333EAA-A8/B16	ECN4338EAA-A8/B6 ECN4338EAA-A8/B11 ECN4338EAA-A8/B16
230	20 25 30			ECN4331BAA-A8/B12 ECN4331BAA-A8/B17 ECN4331BAA-A8/B22	ECN4332BAA-A8/B12 ECN4332BAA-A8/B17 ECN4332BAA-A8/B22	ECN4333BAA-A8/B12 ECN4333BAA-A8/B17 ECN4333BAA-A8/B22	ECN4338BAA-A8/B12 ECN4338BAA-A8/B17 ECN4338BAA-A8/B22
460	30 40 50			ECN4331CAA-A8/B24 ECN4331CAA-A8/B29 ECN4331CAA-A8/B34	ECN4332CAA-A8/B24 ECN4332CAA-A8/B29 ECN4332CAA-A8/B34	ECN4333CAA-A8/B24 ECN4333CAA-A8/B29 ECN4333CAA-A8/B34	ECN4338CAA-A8/B24 ECN4338CAA-A8/B29 ECN4338CAA-A8/B34
575	30 40 50			ECN4331DAA-A8/B25 ECN4331DAA-A8/B30 ECN4331DAA-A8/B35	ECN4332DAA-A8/B25 ECN4332DAA-A8/B30 ECN4332DAA-A8/B35	ECN4333DAA-A8/B25 ECN4333DAA-A8/B30 ECN4333DAA-A8/B35	ECN4338DAA-A8/B25 ECN4338DAA-A8/B30 ECN4338DAA-A8/B35
NEMA Size 4 (135A)							
200	30 40	120	200A	ECN4341EAA-A8/B21 ECN4341EAA-A8/B26	ECN4342EAA-A8/B21 ECN4342EAA-A8/B26	ECN4343EAA-A8/B21 ECN4343EAA-A8/B26	ECN4348EAA-A8/B21 ECN4348EAA-A8/B26
230	40 50			ECN4341BAA-A8/B27 ECN4341BAA-A8/B32	ECN4342BAA-A8/B27 ECN4342BAA-A8/B32	ECN4343BAA-A8/B27 ECN4343BAA-A8/B32	ECN4348BAA-A8/B27 ECN4348BAA-A8/B32
460	75 100			ECN4341CAA-A8/B39 ECN4341CAA-A8/B44	ECN4342CAA-A8/B39 ECN4342CAA-A8/B44	ECN4343CAA-A8/B39 ECN4343CAA-A8/B44	ECN4348CAA-A8/B39 ECN4348CAA-A8/B44
575	75 100			ECN4341DAA-A8/B40 ECN4341DAA-A8/B45	ECN4342DAA-A8/B40 ECN4342DAA-A8/B45	ECN4343DAA-A8/B40 ECN4343DAA-A8/B45	ECN4348DAA-A8/B40 ECN4348DAA-A8/B45
NEMA Size 5 (270A)							
200	50 75	120	400A	ECN4351EAA-A8/B31 ECN4351EAA-A8/B36	ECN4352EAA-A8/B31 ECN4352EAA-A8/B36	ECN4353EAA-A8/B31 ECN4353EAA-A8/B36	ECN4358EAA-A8/B31 ECN4358EAA-A8/B36
230	75 100			ECN4351BAA-A8/B37 ECN4351BAA-A8/B42	ECN4352BAA-A8/B37 ECN4352BAA-A8/B42	ECN4353BAA-A8/B37 ECN4353BAA-A8/B42	ECN4358BAA-A8/B37 ECN4358BAA-A8/B42
460	125 150 200			ECN4351CAA-A8/B49 ECN4351CAA-A8/B54 ECN4351CAA-A8/B59	ECN4352CAA-A8/B49 ECN4352CAA-A8/B54 ECN4352CAA-A8/B59	ECN4353CAA-A8/B49 ECN4353CAA-A8/B54 ECN4353CAA-A8/B59	ECN4358CAA-A8/B49 ECN4358CAA-A8/B54 ECN4358CAA-A8/B59
575	125 150 200			ECN4351DAA-A8/B50 ECN4351DAA-A8/B55 ECN4351DAA-A8/B60	ECN4352DAA-A8/B50 ECN4352DAA-A8/B55 ECN4352DAA-A8/B60	ECN4353DAA-A8/B50 ECN4353DAA-A8/B55 ECN4353DAA-A8/B60	ECN4358DAA-A8/B50 ECN4358DAA-A8/B55 ECN4358DAA-A8/B60
Starters do not include heater packs. Select 1 carton of 3 heater packs. Heater Pack Selection, **Page 16-6**.							

① All reduced voltage starters are furnished with 120V coils and control transformer connected for 120V secondary. If Modification Code **C35** separate control is specified, the control transformer is omitted.

② All Type 12 enclosures are standardized with external reset. For internal reset, order Modification Code **R5**.

③ Type 12 enclosure is without safety door lock.

Cover Control ..... **Page 6-20**
Other Magnet Coils ..... **Page 6-19**
Dimensions ..... **Page 15-8**
Accessories ..... **Page 16-4**
Modifications ..... **Page 16-40**
Technical Data ..... **Page 18-7**

Table 6-20. Class ECN43 — Combination Autotransformer Starter — Non-fusible Disconnect (Continued)

Motor Voltage	hp Rating	Magnet Coil Voltage ①	Dis-connect Amps.	Type 1 General Purpose	Type 3R Rainproof	Type 4 Water & Dust-Tight Painted Steel	Type 12 Dust-Tight Industrial External Reset ②③
				Catalog Number	Catalog Number	Catalog Number	Catalog Number
NEMA Size 6 (540A)							
200	100 125 150	120	600A	ECN4361EAA-A8/B41 ECN4361EAA-A8/B46 ECN4361EAA-A8/B51	ECN4362EAA-A8/B41 ECN4362EAA-A8/B46 ECN4362EAA-A8/B51	ECN4363EAA-A8/B41 ECN4363EAA-A8/B46 ECN4363EAA-A8/B51	ECN4368EAA-A8/B41 ECN4368EAA-A8/B46 ECN4368EAA-A8/B51
230	125 150 200			ECN4361BAA-A8/B47 ECN4361BAA-A8/B52 ECN4361BAA-A8/B57	ECN4362BAA-A8/B47 ECN4362BAA-A8/B52 ECN4362BAA-A8/B57	ECN4363BAA-A8/B47 ECN4363BAA-A8/B52 ECN4363BAA-A8/B57	ECN4368BAA-A8/B47 ECN4368BAA-A8/B52 ECN4368BAA-A8/B57
460	250 300 400			ECN4361CAA-A8/B64 ECN4361CAA-A8/B69 ECN4361CAA-A8/B74	ECN4362CAA-A8/B64 ECN4362CAA-A8/B69 ECN4362CAA-A8/B74	ECN4363CAA-A8/B64 ECN4363CAA-A8/B69 ECN4363CAA-A8/B74	ECN4368CAA-A8/B64 ECN4368CAA-A8/B69 ECN4368CAA-A8/B74
575	250 300 400			ECN4361DAA-A8/B65 ECN4361DAA-A8/B70 ECN4361DAA-A8/B75	ECN4362DAA-A8/B65 ECN4362DAA-A8/B70 ECN4362DAA-A8/B75	ECN4363DAA-A8/B65 ECN4363DAA-A8/B70 ECN4363DAA-A8/B75	ECN4368DAA-A8/B65 ECN4368DAA-A8/B70 ECN4368DAA-A8/B75
NEMA Size 7 (810A)							
230	250 300	120	④	ECN4371BAA-A8/B62 ECN4371BAA-A8/B67	ECN4372BAA-A8/B62 ECN4372BAA-A8/B67	ECN4373BAA-A8/B62 ECN4373BAA-A8/B67	ECN4378BAA-A8/B62 ECN4378BAA-A8/B67
460	450 500 600			ECN4371CAA-A8/B78 ECN4371CAA-A8/B81 ECN4371CAA-A8/B84	ECN4372CAA-A8/B78 ECN4372CAA-A8/B81 ECN4372CAA-A8/B84	ECN4373CAA-A8/B78 ECN4373CAA-A8/B81 ECN4373CAA-A8/B84	ECN4378CAA-A8/B78 ECN4378CAA-A8/B81 ECN4378CAA-A8/B84
575	450 500 600			ECN4371DAA-A8/B79 ECN4371DAA-A8/B82 ECN4371DAA-A8/B85	ECN4372DAA-A8/B79 ECN4372DAA-A8/B82 ECN4372DAA-A8/B85	ECN4373DAA-A8/B79 ECN4373DAA-A8/B82 ECN4373DAA-A8/B85	ECN4378DAA-A8/B79 ECN4378DAA-A8/B82 ECN4378DAA-A8/B85
NEMA Size 8 (1215A)							
230	400 450	120	④	ECN4381BAA-A8/B72 ECN4381BAA-A8/B76	ECN4382BAA-A8/B72 ECN4382BAA-A8/B76	ECN4383BAA-A8/B72 ECN4383BAA-A8/B76	ECN4388BAA-A8/B72 ECN4388BAA-A8/B76
460	700 800 900			ECN4381CAA-A8/B87 ECN4381CAA-A8/B91 ECN4381CAA-A8/B94	ECN4382CAA-A8/B87 ECN4382CAA-A8/B91 ECN4382CAA-A8/B94	ECN4383CAA-A8/B87 ECN4383CAA-A8/B91 ECN4383CAA-A8/B94	ECN4388CAA-A8/B87 ECN4388CAA-A8/B91 ECN4388CAA-A8/B94
575	700 800 900			ECN4381DAA-A8/B88 ECN4381DAA-A8/B92 ECN4381DAA-A8/B95	ECN4382DAA-A8/B88 ECN4382DAA-A8/B92 ECN4382DAA-A8/B95	ECN4383DAA-A8/B88 ECN4383DAA-A8/B92 ECN4383DAA-A8/B95	ECN4388DAA-A8/B88 ECN4388DAA-A8/B92 ECN4388DAA-A8/B95
NEMA Size 9 (2250A)							
230	800	120	④	ECN4391BAA-A8/B89	ECN4392BAA-A8/B89	ECN4393BAA-A8/B89	ECN4398BAA-A8/B89
460	1600			ECN4391CAA-A8/B96	ECN4392CAA-A8/B96	ECN4393CAA-A8/B96	ECN4398CAA-A8/B96
575	1600			ECN4391DAA-A8/B97	ECN4392DAA-A8/B97	ECN4393DAA-A8/B97	ECN4398DAA-A8/B97
Starters do not include heater packs. Select 1 carton of 3 heater packs. Heater Pack Selection, **Page 16-6**.							

① All reduced voltage starters are furnished with 120V coils and control transformer connected for 120V secondary. If Modification Code **C35** separate control is specified, the control transformer is omitted.

② All Type 12 enclosures are standardized with external reset. For internal reset, order Modification Code **R5**.

③ Type 12 enclosure is without safety door interlock.

④ Supply hp, voltage, FLA and whether motor is design E or not when ordering the starter.

Cover Control ..... **Page 6-20**
Other Magnet Coils ..... **Page 6-19**
Dimensions ..... **Page 15-8**
Accessories ..... **Page 16-4**
Modifications ..... **Page 16-40**
Technical Data ..... **Page 18-7**

Table 6-21. Class ECN44 — Combination Autotransformer Starter — Circuit Breaker

Motor Voltage	hp Rating	Magnet Coil Voltage ①	Circuit Breaker Type	Type 1 General Purpose	Type 3R Rainproof	Type 4 Water & Dust-Tight Painted Steel	Type 12 Dust-Tight Industrial External Reset ②③
				Catalog Number	Catalog Number	Catalog Number	Catalog Number
NEMA Size 2 (45A)							
200	10	120	HMCPE 50A	ECN4421EAF-A8/B1	ECN4422EAF-A8/B1	ECN4423EAF-A8/B1	ECN4428EAF-A8/B1
230	10 15			ECN4421BAF-A8/B2 ECN4421BAF-A8/B7	ECN4422BAF-A8/B2 ECN4422BAF-A8/B7	ECN4423BAF-A8/B2 ECN4423BAF-A8/B7	ECN4428BAF-A8/B2 ECN4428BAF-A8/B7
460	10 15 20 25			ECN4421CAF-A8/B4 ECN4421CAF-A8/B9 ECN4421CAF-A8/B14 ECN4421CAF-A8/B19	ECN4422CAF-A8/B4 ECN4422CAF-A8/B9 ECN4422CAF-A8/B14 ECN4422CAF-A8/B19	ECN4423CAF-A8/B4 ECN4423CAF-A8/B9 ECN4423CAF-A8/B14 ECN4423CAF-A8/B19	ECN4428CAF-A8/B4 ECN4428CAF-A8/B9 ECN4428CAF-A8/B14 ECN4428CAF-A8/B19
575	10 15 20 25		HMCP 50A	ECN4421DA9-A8/B5 ECN4421DA9-A8/B10 ECN4421DA9-A8/B15 ECN4421DA9-A8/B20	ECN4422DA9-A8/B5 ECN4422DA9-A8/B10 ECN4422DA9-A8/B15 ECN4422DA9-A8/B20	ECN4423DA9-A8/B5 ECN4423DA9-A8/B10 ECN4423DA9-A8/B15 ECN4423DA9-A8/B20	ECN4428DA9-A8/B5 ECN4428DA9-A8/B10 ECN4428DA9-A8/B15 ECN4428DA9-A8/B20
NEMA Size 3 (90A)							
200	15 20 25	120	HMCPE 100A	ECN4431EAG-A8/B6 ECN4431EAG-A8/B11 ECN4431EAG-A8/B16	ECN4432EAG-A8/B6 ECN4432EAG-A8/B11 ECN4432EAG-A8/B16	ECN4433EAG-A8/B6 ECN4433EAG-A8/B11 ECN4433EAG-A8/B16	ECN4438EAG-A8/B6 ECN4438EAG-A8/B11 ECN4438EAG-A8/B16
230	20 25 30			ECN4431BAG-A8/B12 ECN4431BAG-A8/B17 ECN4431BAG-A8/B22	ECN4432BAG-A8/B12 ECN4432BAG-A8/B17 ECN4432BAG-A8/B22	ECN4433BAG-A8/B12 ECN4433BAG-A8/B17 ECN4433BAG-A8/B22	ECN4438BAG-A8/B12 ECN4438BAG-A8/B17 ECN4438BAG-A8/B22
460	30 40 50			ECN4431CAG-A8/B24 ECN4431CAG-A8/B29 ECN4431CAG-A8/B34	ECN4432CAG-A8/B24 ECN4432CAG-A8/B29 ECN4432CAG-A8/B34	ECN4433CAG-A8/B24 ECN4433CAG-A8/B29 ECN4433CAG-A8/B34	ECN4438CAG-A8/B24 ECN4438CAG-A8/B29 ECN4438CAG-A8/B34
575	30 40 50		HMCP 100A	ECN4431DAI-A8/B25 ECN4431DAI-A8/B30 ECN4431DAI-A8/B35	ECN4432DAI-A8/B25 ECN4432DAI-A8/B30 ECN4432DAI-A8/B35	ECN4433DAI-A8/B25 ECN4433DAI-A8/B30 ECN4433DAI-A8/B35	ECN4438DAI-A8/B25 ECN4438DAI-A8/B30 ECN4438DAI-A8/B35
NEMA Size 4 (135A)							
200	30 40	120	HMCP 150A	ECN4441EAH-A8/B21 ECN4441EAH-A8/B26	ECN4442EAH-A8/B21 ECN4442EAH-A8/B26	ECN4443EAH-A8/B21 ECN4443EAH-A8/B26	ECN4448EAH-A8/B21 ECN4448EAH-A8/B26
230	40 50			ECN4441BAH-A8/B27 ECN4441BAH-A8/B32	ECN4442BAH-A8/B27 ECN4442BAH-A8/B32	ECN4443BAH-A8/B27 ECN4443BAH-A8/B32	ECN4448BAH-A8/B27 ECN4448BAH-A8/B32
460	75 100			ECN4441CAH-A8/B39 ECN4441CAH-A8/B44	ECN4442CAH-A8/B39 ECN4442CAH-A8/B44	ECN4443CAH-A8/B39 ECN4443CAH-A8/B44	ECN4448CAH-A8/B39 ECN4448CAH-A8/B44
575	75 100			ECN4441DAH-A8/B40 ECN4441DAH-A8/B45	ECN4442DAH-A8/B40 ECN4442DAH-A8/B45	ECN4443DAH-A8/B40 ECN4443DAH-A8/B45	ECN4448DAH-A8/B40 ECN4448DAH-A8/B45
NEMA Size 5 (270A)							
200	50 75	120	HMCP 250A HMCP 400A	ECN4451EAJ-A8/B31 ECN4451EAK-A8/B36	ECN4452EAJ-A8/B31 ECN4452EAK-A8/B36	ECN4453EAJ-A8/B31 ECN4453EAK-A8/B36	ECN4458EAJ-A8/B31 ECN4458EAK-A8/B36
230	75 100		HMCP 250A HMCP 400A	ECN4451BAJ-A8/B37 ECN4451BAK-A8/B42	ECN4452BAJ-A8/B37 ECN4452BAK-A8/B42	ECN4453BAJ-A8/B37 ECN4453BAK-A8/B42	ECN4458BAJ-A8/B37 ECN4458BAK-A8/B42
460	125 150 200		HMCP 250A HMCP 250A HMCP 400A	ECN4451CAJ-A8/B49 ECN4451CAJ-A8/B54 ECN4451CAK-A8/B59	ECN4452CAJ-A8/B49 ECN4452CAJ-A8/B54 ECN4452CAK-A8/B59	ECN4453CAJ-A8/B49 ECN4453CAJ-A8/B54 ECN4453CAK-A8/B59	ECN4458CAJ-A8/B49 ECN4458CAJ-A8/B54 ECN4458CAK-A8/B59
575	125 150 200		HMCP 250A HMCP 250A HMCP 250A	ECN4451DAJ-A8/B50 ECN4451DAJ-A8/B55 ECN4451DAJ-A8/B60	ECN4452DAJ-A8/B50 ECN4452DAJ-A8/B55 ECN4452DAJ-A8/B60	ECN4453DAJ-A8/B50 ECN4453DAJ-A8/B55 ECN4453DAJ-A8/B60	ECN4458DAJ-A8/B50 ECN4458DAJ-A8/B55 ECN4458DAJ-A8/B60

Starters do not include heater packs. Select 1 carton of 3 heater packs. Heater Pack Selection, **Page 16-6**.

① All reduced voltage starters are furnished with 120V coils and control transformer connected for 120V secondary. If Modification Code **C35** separate control is specified, the control transformer is omitted.

② All Type 12 enclosures are standardized with external reset. For internal reset, order Modification Code **R5**.

③ Type 12 enclosure is without safety door interlock.

Cover Control ..... **Page 6-20**
Other Magnet Coils ..... **Page 6-19**
Dimensions ..... **Page 15-8**
Accessories ..... **Page 16-4**
Modifications ..... **Page 16-40**
Technical Data ..... **Page 18-7**

Table 6-21. Class ECN44 — Combination Autotransformer Starter — Circuit Breaker (Continued)

Motor Voltage	hp Rating	Magnet Coil Voltage ①	Circuit Breaker Type	Type 1 General Purpose	Type 3R Rainproof	Type 4 Water & Dust-Tight Painted Steel	Type 12 Dust-Tight Industrial External Reset ②③
				Catalog Number	Catalog Number	Catalog Number	Catalog Number
NEMA Size 6 (540A)							
200	100 125 150	120	HMCP 600A HMCP 600A HMCP 600A	ECN4461EAL-A8/B41 ECN4461EAL-A8/B46 ECN4461EAL-A8/B51	ECN4462EAL-A8/B41 ECN4462EAL-A8/B46 ECN4462EAL-A8/B51	ECN4463EAL-A8/B41 ECN4463EAL-A8/B46 ECN4463EAL-A8/B51	ECN4468EAL-A8/B41 ECN4468EAL-A8/B46 ECN4468EAL-A8/B51
230	125 150 200		HMCP 600A HMCP 600A MD 800A	ECN4461BAL-A8/B47 ECN4461BAL-A8/B52 ECN4461BAM-A8/B57	ECN4462BAL-A8/B47 ECN4462BAL-A8/B52 ECN4462BAM-A8/B57	ECN4463BAL-A8/B47 ECN4463BAL-A8/B52 ECN4463BAM-A8/B57	ECN4468BAL-A8/B47 ECN4468BAL-A8/B52 ECN4468BAM-A8/B57
460	250 300 400		HMCP 600A HMCP 600A MD 800A	ECN4461CAL-A8/B64 ECN4461CAL-A8/B69 ECN4461CAM-A8/B74	ECN4462CAL-A8/B64 ECN4462CAL-A8/B69 ECN4462CAM-A8/B74	ECN4463CAL-A8/B64 ECN4463CAL-A8/B69 ECN4463CAM-A8/B74	ECN4468CAL-A8/B64 ECN4468CAL-A8/B69 ECN4468CAM-A8/B74
575	250 300 400		HMCP 600A HMCP 600A MD 800A	ECN4461DAL-A8/B65 ECN4461DAL-A8/B70 ECN4461DAM-A8/B75	ECN4462DAL-A8/B65 ECN4462DAL-A8/B70 ECN4462DAM-A8/B75	ECN4463DAL-A8/B65 ECN4463DAL-A8/B70 ECN4463DAM-A8/B75	ECN4468DAL-A8/B65 ECN4468DAL-A8/B70 ECN4468DAM-A8/B75
NEMA Size 7 (810A)							
230	250 300	120	④	ECN4471BAU-A8/B62 ECN4471BAU-A8/B67	ECN4472BAU-A8/B62 ECN4472BAU-A8/B67	ECN4473BAU-A8/B62 ECN4473BAU-A8/B67	ECN4478BAU-A8/B62 ECN4478BAU-A8/B67
460	450 500 600			ECN4471CAU-A8/B78 ECN4471CAU-A8/B81 ECN4471CAU-A8/B84	ECN4472CAU-A8/B78 ECN4472CAU-A8/B81 ECN4472CAU-A8/B84	ECN4473CAU-A8/B78 ECN4473CAU-A8/B81 ECN4473CAU-A8/B84	ECN4478CAU-A8/B78 ECN4478CAU-A8/B81 ECN4478CAU-A8/B84
575	450 500 600			ECN4471DAU-A8/B79 ECN4471DAU-A8/B82 ECN4471DAU-A8/B85	ECN4472DAU-A8/B79 ECN4472DAU-A8/B82 ECN4472DAU-A8/B85	ECN4473DAU-A8/B79 ECN4473DAU-A8/B82 ECN4473DAU-A8/B85	ECN4478DAU-A8/B79 ECN4478DAU-A8/B82 ECN4478DAU-A8/B85
NEMA Size 8 (1215A)							
230	400 450	120	④	ECN4481BAU-A8/B72 ECN4481BAU-A8/B76	ECN4482BAU-A8/B72 ECN4482BAU-A8/B76	ECN4483BAU-A8/B72 ECN4483BAU-A8/B76	ECN4488BAU-A8/B72 ECN4488BAU-A8/B76
460	700 800 900			ECN4481CAU-A8/B87 ECN4481CAU-A8/B91 ECN4481CAU-A8/B94	ECN4482CAU-A8/B87 ECN4482CAU-A8/B91 ECN4482CAU-A8/B94	ECN4483CAU-A8/B87 ECN4483CAU-A8/B91 ECN4483CAU-A8/B94	ECN4488CAU-A8/B87 ECN4488CAU-A8/B91 ECN4488CAU-A8/B94
575	700 800 900			ECN4481DAU-A8/B88 ECN4481DAU-A8/B92 ECN4481DAU-A8/B95	ECN4482DAU-A8/B88 ECN4482DAU-A8/B92 ECN4482DAU-A8/B95	ECN4483DAU-A8/B88 ECN4483DAU-A8/B92 ECN4483DAU-A8/B95	ECN4488DAU-A8/B88 ECN4488DAU-A8/B92 ECN4488DAU-A8/B95
NEMA Size 9 (2250A)							
230	800	120	④	ECN4491BAU-A8/B89	ECN4492BAU-A8/B89	ECN4493BAU-A8/B89	ECN4498BAU-A8/B89
460	1600			ECN4491CAU-A8/B96	ECN4492CAU-A8/B96	ECN4493CAU-A8/B96	ECN4498CAU-A8/B96
575	1600			ECN4491DAU-A8/B97	ECN4492DAU-A8/B97	ECN4493DAU-A8/B97	ECN4498DAU-A8/B97

Starters do not include heater packs. Select 1 carton of 3 heater packs. Heater Pack Selection, **Page 16-6**.

① All reduced voltage starters are furnished with 120V coils and control transformer connected for 120V secondary. If Modification Code **C35** separate control is specified, the control transformer is omitted.

② All Type 12 enclosures are standardized with external reset. For internal reset, order Modification Code **R5**.

③ Type 12 enclosure is without safety door interlock.

④ Supply hp, voltage, FLA and whether motor is design E or not when ordering the starter.

Cover Control ..... **Page 6-20**
Other Magnet Coils ..... **Page 6-19**
Dimensions ..... **Page 15-8**
Accessories ..... **Page 16-4**
Modifications ..... **Page 16-40**
Technical Data ..... **Page 18-7**

Features

- Non-combination and Combination Designs
- 3-Phase Magnetic, 3-Pole
- Interchangeable Heater OLR
- 600V Maximum

Product Selection

Table 6-22. Class ECN45 — Non-combination Part Winding Starter

Motor Voltage	Max. hp Rating	Magnet Coil Voltage ①	Type 1 General Purpose	Type 3R Rainproof	Type 4X ④ Water & Dust-Tight Stainless Steel	Type 12 Dust-Tight Industrial External Reset ②	Component Starter (Open)
			Catalog Number	Catalog Number	Catalog Number	Catalog Number	Catalog Number
NEMA Size 2PW							
200	20	120	ECN4521EAA	ECN4522EAA	ECN4524EAA	ECN4528EAA	AN16GN0AB
230	25		ECN4521BAA	ECN4522BAA	ECN4524BAA	ECN4528BAA	
460	40		ECN4521CAA	ECN4522CAA	ECN4524CAA	ECN4528CAA	
575	40		ECN4521DAA	ECN4522DAA	ECN4524DAA	ECN4528DAA	
NEMA Size 3PW							
200	40	120	ECN4531EAA	ECN4532EAA	ECN4534EAA	ECN4538EAA	AN16KN0AB
230	50		ECN4531BAA	ECN4532BAA	ECN4534BAA	ECN4538BAA	
460	75		ECN4531CAA	ECN4532CAA	ECN4534CAA	ECN4538CAA	
575	75		ECN4531DAA	ECN4532DAA	ECN4534DAA	ECN4538DAA	
NEMA Size 4PW							
200	75	120	ECN4541EAA	ECN4542EAA	ECN4544EAA	ECN4548EAA	AN16NN0AB
230	75		ECN4541BAA	ECN4542BAA	ECN4544BAA	ECN4548BAA	
460	150		ECN4541CAA	ECN4542CAA	ECN4544CAA	ECN4548CAA	
575	150		ECN4541DAA	ECN4542DAA	ECN4544DAA	ECN4548DAA	
NEMA Size 5PW							
200	150	120	ECN4551EAA	ECN4552EAA	ECN4554EAA	ECN4558EAA	AN16SN0AB
230	150		ECN4551BAA	ECN4552BAA	ECN4554BAA	ECN4558BAA	
460	350		ECN4551CAA	ECN4552CAA	ECN4554CAA	ECN4558CAA	
575	350		ECN4551DAA	ECN4552DAA	ECN4554DAA	ECN4558DAA	
NEMA Size 6PW							
230	300	120	ECN4561BAA	ECN4562BAA	ECN4563BAA ③	ECN4568BAA	AN16TN0AB
460	600		ECN4561CAA	ECN4562CAA	ECN4563CAA ③	ECN4568CAA	
575	600		ECN4561DAA	ECN4562DAA	ECN4563DAA ③	ECN4568DAA	
NEMA Size 7PW							
230	450	120	ECN4571BAA	ECN4572BAA	ECN4573BAA ③	ECN4578BAA	AN16UN0AB
460	900		ECN4571CAA	ECN4572CAA	ECN4573CAA ③	ECN4578CAA	
575	900		ECN4571DAA	ECN4572DAA	ECN4573DAA ③	ECN4578DAA	
NEMA Size 8PW							
230	700	120	ECN4581BAA	ECN4582BAA	ECN4583BAA ③	ECN4588BAA	AN16VN0AB
460	1400		ECN4581CAA	ECN4582CAA	ECN4583CAA ③	ECN4588CAA	
575	1400		ECN4581DAA	ECN4582DAA	ECN4583DAA ③	ECN4588DAA	

Starters do not include heater packs. Select 2 cartons of 3 heater packs (2 overload relays — 1 for each winding). Heater Pack Selection, **Page 16-6**.

① All reduced voltage starters are furnished with 120V coils and control transformer connected for 120V secondary. If Modification Code **C35** separate control is specified, the control transformer is omitted.

② All Type 12 enclosures are standardized with external reset. For internal reset, order Modification Code **R5**.

③ Type 4 (Painted Steel) Sizes 6 – 8PW.

④ The Catalog Numbers listed in the Type 4X column are for Type 4X 304-Grade Stainless Steel, as indicated by the seventh digit **4**. Example: ECN4524EAA. To order Type 4X 316-Grade Stainless Steel, change that digit to **9**. To order Type 4 Painted Steel, change that digit to **3**. To order Nonmetallic, change that digit to **5**. For details on these Alternate Enclosures, see **Tab 14**.

Cover Control ..... **Page 6-20**
Other Magnet Coils ..... **Page 6-19**
Dimensions ..... **Page 15-8**
Accessories ..... **Page 16-4**
Modifications ..... **Page 16-40**
Technical Data ..... **Page 18-7**

Table 6-23. Class ECN46 — Combination Part Winding Starter — Fusible Disconnect

Motor Voltage	Max. hp Rating	Magnet Coil Voltage ①	Fuse Clip Amperes	Type 1 General Purpose	Type 3R Rainproof	Type 4X ⑥ Water & Dust-Tight Stainless Steel	Type 12 Dust-Tight Industrial External Reset ②③	Component Starter (Open)
				Catalog Number	Catalog Number	Catalog Number	Catalog Number	Catalog Number
NEMA Size 2PW								
200	20	120	100A	ECN4621EAF	ECN4622EAF	ECN4624EAF	ECN4628EAF	AN16GN0AB
230	15 25		60A 100A	ECN4621BAD ECN4621BAF	ECN4622BAD ECN4622BAF	ECN4624BAD ECN4624BAF	ECN4628BAD ECN4628BAF	AN16GN0AB
460	30 40		60A 100A	ECN4621CAE ECN4621CAG	ECN4622CAE ECN4622CAG	ECN4624CAE ECN4624CAG	ECN4628CAE ECN4628CAG	AN16GN0AB
575	20 40		30A 60A	ECN4621DAC ECN4621DAE	ECN4622DAC ECN4622DAE	ECN4624DAC ECN4624DAE	ECN4628DAC ECN4628DAE	AN16GN0AB
NEMA Size 3PW								
200	40	120	200A	ECN4631EAH	ECN4632EAH	ECN4634EAH	ECN4638EAH	AN16KN0AB
230	50		200A	ECN4631BAH	ECN4632BAH	ECN4634BAH	ECN4638BAH	AN16KN0AB
460	50 75		100A 200A	ECN4631CAG ECN4631CAJ	ECN4632CAG ECN4632CAJ	ECN4634CAG ECN4634CAJ	ECN4638CAG ECN4638CAJ	AN16KN0AB
575	60 75		100A 200A	ECN4631DAG ECN4631DAJ	ECN4632DAG ECN4632DAJ	ECN4634DAG ECN4634DAJ	ECN4638DAG ECN4638DAJ	AN16KN0AB
NEMA Size 4PW								
200	50 75	120	200A 400A	ECN4641EAH ECN4641EAK	ECN4642EAH ECN4642EAK	ECN4644EAH ECN4644EAK	ECN4648EAH ECN4648EAK	AN16NN0AB
230	75		400A	ECN4641BAK	ECN4642BAK	ECN4644BAK	ECN4648BAK	AN16NN0AB
460	100 150		200A 400A	ECN4641CAJ ECN4641CAL	ECN4642CAJ ECN4642CAL	ECN4644CAJ ECN4644CAL	ECN4648CAJ ECN4648CAL	AN16NN0AB
575	150		200A	ECN4641DAJ	ECN4642DAJ	ECN4644DAJ	ECN4648DAJ	AN16NN0AB
NEMA Size 5PW								
200	100 150	120	200	ECN4651EAK ECN4651EAM	ECN4652EAK ECN4652EAM	ECN4654EAK ECN4654EAM	ECN4658EAK ECN4658EAM	AN16SN0AB
230	100 150		230	ECN4651BAK ECN4651BAM	ECN4652BAK ECN4652BAM	ECN4654BAK ECN4654BAM	ECN4658BAK ECN4658BAM	AN16SN0AB
460	200 350		460	ECN4651CAL ECN4651CAN	ECN4652CAL ECN4652CAN	ECN4654CAL ECN4654CAN	ECN4658CAL ECN4658CAN	AN16SN0AB
575	300 350		575	ECN4651DAL ECN4651DAN	ECN4652DAL ECN4652DAN	ECN4654DAL ECN4654DAN	ECN4658DAL ECN4658DAN	AN16SN0AB
NEMA Size 6PW								
230 460 575	300 600 600	120	⑤	ECN4661BAU ECN4661CAU ECN4661DAU	ECN4662BAU ECN4662CAU ECN4662DAU	ECN4663BAU ④ ECN4663CAU ④ ECN4663DAU ④	ECN4668BAU ECN4668CAU ECN4668DAU	AN16TN0AB
NEMA Size 7PW								
230 460 575	450 900 900	120	⑤	ECN4671BAU ECN4671CAU ECN4671DAU	ECN4672BAU ECN4672CAU ECN4672DAU	ECN4673BAU ④ ECN4673CAU ④ ECN4673DAU ④	ECN4678BAU ECN4678CAU ECN4678DAU	AN16UN0AB
NEMA Size 8PW								
230 460 575	700 1400 1400	120	⑤	ECN4681BAU ECN4681CAU ECN4681DAU	ECN4682BAU ECN4682CAU ECN4682DAU	ECN4683BAU ④ ECN4683CAU ④ ECN4683DAU ④	ECN4688BAU ECN4688CAU ECN4688DAU	AN16VN0AB

Starters do not include heater packs. Select 2 cartons of 3 heater packs (2 overload relays — 1 for each winding). Heater Pack Selection, **Page 16-6**.

① All reduced voltage starters are furnished with 120V coils and control transformer connected for 120V secondary. If Modification Code **C35** separate control is specified, the control transformer is omitted.

② All Type 12 enclosures are standardized with external reset. For internal reset, order Modification Code **R5**.

③ Type 12 enclosure is without safety door interlock.

④ Type 4 (Painted Steel) Sizes 6 – 8PW.

⑤ Supply hp, voltage, FLA and whether motor is design E or not when ordering starter.

⑥ The Catalog Numbers listed in the Type 4X column are for Type 4X 304-Grade Stainless Steel, as indicated by the seventh digit **4**. Example: ECN4624EAF. To order Type 4X 316-Grade Stainless Steel, change that digit to **9**. To order Type 4 Painted Steel, change that digit to **3**. To order Nonmetallic, change that digit to **5**. For details on these Alternate Enclosures, see **Tab 14**.

Cover Control ..... **Page 6-20**
Other Magnet Coils ..... **Page 6-19**
Dimensions ..... **Page 15-8**
Accessories ..... **Page 16-4**
Modifications ..... **Page 16-40**
Technical Data ..... **Page 18-7**

Table 6-24. Class ECN46 — Combination Part Winding Starter — Non-fusible Disconnect

Motor Voltage	Max. hp Rating	Magnet Coil Voltage ①	Disconnect Amperes	Type 1 General Purpose	Type 3R Rainproof	Type 4X ⑥ Water & Dust-Tight Industrial Stainless Steel	Type 12 Dust-Tight Industrial External Reset ②③	Component Starter (Open)
				Catalog Number	Catalog Number	Catalog Number	Catalog Number	Catalog Number
NEMA Size 2PW								
200	20	120	60A	ECN4621EAA	ECN4622EAA	ECN4624EAA	ECN4628EAA	AN16GN0AB
230	25			ECN4621BAA	ECN4622BAA	ECN4624BAA	ECN4628BAA	
460	40			ECN4621CAA	ECN4622CAA	ECN4624CAA	ECN4628CAA	
575	40			ECN4621DAA	ECN4622DAA	ECN4624DAA	ECN4628DAA	
NEMA Size 3PW								
200	40	120	100A	ECN4631EAA	ECN4632EAA	ECN4634EAA	ECN4638EAA	AN16KN0AB
230	50			ECN4631BAA	ECN4632BAA	ECN4634BAA	ECN4638BAA	
460	75			ECN4631CAA	ECN4632CAA	ECN4634CAA	ECN4638CAA	
575	75			ECN4631DAA	ECN4632DAA	ECN4634DAA	ECN4638DAA	
NEMA Size 4PW								
200	75	120	200A	ECN4641EAA	ECN4642EAA	ECN4644EAA	ECN4648EAA	AN16NN0AB
230	75			ECN4641BAA	ECN4642BAA	ECN4644BAA	ECN4648BAA	
460	150			ECN4641CAA	ECN4642CAA	ECN4644CAA	ECN4648CAA	
575	150			ECN4641DAA	ECN4642DAA	ECN4644DAA	ECN4648DAA	
NEMA Size 5PW								
200	150	120	400A	ECN4651EAA	ECN4652EAA	ECN4654EAA	ECN4658EAA	AN16SN0AB
230	150			ECN4651BAA	ECN4652BAA	ECN4654BAA	ECN4658BAA	
460	350			ECN4651CAA	ECN4652CAA	ECN4654CAA	ECN4658CAA	
575	350			ECN4651DAA	ECN4652DAA	ECN4654DAA	ECN4658DAA	
NEMA Size 6PW								
230	300	120	600A	ECN4661BAA	ECN4662BAA	ECN4663BAA ④	ECN4668BAA	AN16TN0AB
460	600			ECN4661CAA	ECN4662CAA	ECN4663CAA ④	ECN4668CAA	
575	600			ECN4661DAA	ECN4662DAA	ECN4663DAA ④	ECN4668DAA	
NEMA Size 7PW								
230	450	120	⑤	ECN4671BAA	ECN4672BAA	ECN4673BAA ④	ECN4678BAA	AN16UN0AB
460	900			ECN4671CAA	ECN4672CAA	ECN4673CAA ④	ECN4678CAA	
575	900			ECN4671DAA	ECN4672DAA	ECN4673DAA ④	ECN4678DAA	
NEMA Size 8PW								
230	700	120	⑤	ECN4681BAA	ECN4682BAA	ECN4683BAA ④	ECN4688BAA	AN16VN0AB
460	1400			ECN4681CAA	ECN4682CAA	ECN4683CAA ④	ECN4688CAA	
575	1400			ECN4681DAA	ECN4682DAA	ECN4683DAA ④	ECN4688DAA	

Starters do not include heater packs. Select 2 cartons of 3 heater packs (2 overload relays — 1 for each winding). Heater Pack Selection, **Page 16-6**.

① All reduced voltage starters are furnished with 120V coils and control transformer connected for 120V secondary. If Modification Code **C35** separate control is specified, the control transformer is omitted.

② All Type 12 enclosures are standardized with external reset. For internal reset, order Modification Code **R5**.

③ Type 12 enclosure is without safety door interlock.

④ Type 4 (Painted Steel) Sizes 6 – 8PW.

⑤ Supply hp, voltage, FLA and whether motor is design E or not when ordering starter.

⑥ The Catalog Numbers listed in the Type 4X column are for Type 4X 304-Grade Stainless Steel, as indicated by the seventh digit **4**. Example: ECN4624EAA. To order Type 4X 316-Grade Stainless Steel, change that digit to **9**. To order Type 4 Painted Steel, change that digit to **3**. To order Nonmetallic, change that digit to **5**. For details on these Alternate Enclosures, see **Tab 14**.

Cover Control ..... **Page 6-20**
Other Magnet Coils ..... **Page 6-19**
Dimensions ..... **Page 15-8**
Accessories ..... **Page 16-4**
Modifications ..... **Page 16-40**
Technical Data ..... **Page 18-7**

Table 6-25. Class ECN47 — Combination Part Winding Starter — Circuit Breaker

Motor Voltage	Max. hp Rating	Magnet Coil Voltage ①	Circuit Breaker Type	Type 1 General Purpose	Type 3R Rainproof	Type 4X ④ Water & Dust-Tight Industrial Stainless Steel	Type 12 Dust-Tight Industrial External Reset ②③	Component Starter (Open)
				Catalog Number	Catalog Number	Catalog Number	Catalog Number	Catalog Number
NEMA Size 2PW								
200	15	120	70A	ECN4721EAH	ECN4722EAH	ECN4724EAH	ECN4728EAH	AN16GN0AB
	20		100A	ECN4721EAK	ECN4722EAK	ECN4724EAK	ECN4728EAK	
230	15		70A	ECN4721BAH	ECN4722BAH	ECN4724BAH	ECN4728BAH	AN16GN0AB
	20		90A	ECN4721BAJ	ECN4722BAJ	ECN4724BAJ	ECN4728BAJ	
	25		100A	ECN4721BAK	ECN4722BAK	ECN4724BAK	ECN4728BAK	
460	20		40A	ECN4721CAE	ECN4722CAE	ECN4724CAE	ECN4728CAE	AN16GN0AB
	30		60A	ECN4721CAG	ECN4722CAG	ECN4724CAG	ECN4728CAG	
	40		90A	ECN4721CAJ	ECN4722CAJ	ECN4724CAJ	ECN4728CAJ	
575	25		40A	ECN4721DAE	ECN4722DAE	ECN4724DAE	ECN4728DAE	AN16GN0AB
	30		50A	ECN4721DAF	ECN4722DAF	ECN4724DAF	ECN4728DAF	
	40		60A	ECN4721DAG	ECN4722DAG	ECN4724DAG	ECN4728DAG	
NEMA Size 3PW								
200	40	120	125A	ECN4731EAL	ECN4732EAL	ECN4734EAL	ECN4738EAL	AN16KN0AB
230	40		125A	ECN4731BAL	ECN4732BAL	ECN4734BAL	ECN4738BAL	AN16KN0AB
	50		150A	ECN4731BAM	ECN4732BAM	ECN4734BAM	ECN4738BAM	
460	50		100A	ECN4731CAK	ECN4732CAK	ECN4734CAK	ECN4738CAK	AN16KN0AB
	75		125A	ECN4731CAL	ECN4732CAL	ECN4734CAL	ECN4738CAL	
575	50		90A	ECN4731DAJ	ECN4732DAJ	ECN4734DAJ	ECN4738DAJ	AN16KN0AB
	60		100A	ECN4731DAK	ECN4732DAK	ECN4734DAK	ECN4738DAK	
	75		125A	ECN4731DAL	ECN4732DAL	ECN4734DAL	ECN4738DAL	
NEMA Size 4PW								
200	50	120	200A	ECN4741EAP	ECN4742EAP	ECN4744EAP	ECN4748EAP	AN16NN0AB
	60		225A	ECN4741EAQ	ECN4742EAQ	ECN4744EAQ	ECN4748EAQ	
	75		300A	ECN4741EAS	ECN4742EAS	ECN4744EAS	ECN4748EAS	
230	60		200A	ECN4741BAP	ECN4742BAP	ECN4744BAP	ECN4748BAP	AN16NN0AB
	75		250A	ECN4741BAR	ECN4742BAR	ECN4744BAR	ECN4748BAR	
460	100		150A	ECN4741CAM	ECN4742CAM	ECN4744CAM	ECN4748CAM	AN16NN0AB
	125		225A	ECN4741CAQ	ECN4742CAQ	ECN4744CAQ	ECN4748CAQ	
	150		250A	ECN4741CAR	ECN4742CAR	ECN4744CAR	ECN4748CAR	
575	100		125A	ECN4741DAL	ECN4742DAL	ECN4744DAL	ECN4748DAL	AN16NN0AB
	125		150A	ECN4741DAM	ECN4742DAM	ECN4744DAM	ECN4748DAM	
	150		200A	ECN4741DAP	ECN4742DAP	ECN4744DAP	ECN4748DAP	
NEMA Size 5PW								
200	100	120	350A	ECN4751EAV	ECN4752EAV	ECN4754EAV	ECN4758EAV	AN16SN0AB
	125		500A	ECN4751EAY	ECN4752EAY	ECN4754EAY	ECN4758EAY	
	150		600A	ECN4751EAZ	ECN4752EAZ	ECN4754EAZ	ECN4758EAZ	
230	100		350A	ECN4751BAV	ECN4752BAV	ECN4754BAV	ECN4758BAV	AN16SN0AB
	125		400A	ECN4751BAW	ECN4752BAW	ECN4754BAW	ECN4758BAW	
	150		500A	ECN4751BAY	ECN4752BAY	ECN4754BAY	ECN4758BAY	
460	200		350A	ECN4751CAV	ECN4752CAV	ECN4754CAV	ECN4758CAV	AN16SN0AB
	250		400A	ECN4751CAW	ECN4752CAW	ECN4754CAW	ECN4758CAW	
	300		500A	ECN4751CAY	ECN4752CAY	ECN4754CAY	ECN4758CAY	
	350		600A	ECN4751CAZ	ECN4752CAZ	ECN4754CAZ	ECN4758CAZ	
575	200		250A	ECN4751DAR	ECN4752DAR	ECN4754DAR	ECN4758DAR	AN16SN0AB
	300		350A	ECN4751DAV	ECN4752DAV	ECN4754DAV	ECN4758DAV	
	350		500A	ECN4751DAY	ECN4752DAY	ECN4754DAY	ECN4758DAY	

Starters do not include heater packs. Select 2 cartons of 3 heater packs (2 overload relays — 1 for each winding). Heater Pack Selection, **Page 16-6**.

① All reduced voltage starters are furnished with 120V coils and control transformer connected for 120V secondary. If Modification Code **C35** separate control is specified, the control transformer is omitted.

② All Type 12 enclosures are standardized with external reset. For internal reset, order Modification Code **R5**.

③ Type 12 enclosure is without safety door interlock.

④ The Catalog Numbers listed in the Type 4X column are for Type 4X 304-Grade Stainless Steel, as indicated by the seventh digit **4**. Example: ECN4724EAH. To order Type 4X 316-Grade Stainless Steel, change that digit to **9**. To order Type 4 Painted Steel, change that digit to **3**. To order Nonmetallic, change that digit to **5**. For details on these Alternate Enclosures, see **Tab 14**.

Cover Control ..... **Page 6-20**
Other Magnet Coils ..... **Page 6-19**
Dimensions ..... **Page 15-8**
Accessories ..... **Page 16-4**
Modifications ..... **Page 16-40**
Technical Data ..... **Page 18-7**

Table 6-25. Class ECN47 — Combination Part Winding Starter — Circuit Breaker (Continued)

Motor Voltage	Max. hp Rating	Magnet Coil Voltage ①	Circuit Breaker Type	Type 1 General Purpose	Type 3R Rainproof	Type 4X ⑥ Water & Dust-Tight Stainless Steel	Type 12 Dust-Tight Industrial External Reset ②③	Component Starter (Open)
				Catalog Number	Catalog Number	Catalog Number	Catalog Number	Catalog Number
NEMA Size 6PW								
230	300	120	⑤	ECN4761BAU	ECN4762BAU	ECN4763BAU ④	ECN4768BAU	AN16TN0AB
460	600			ECN4761CAU	ECN4762CAU	ECN4763CAU ④	ECN4768CAU	AN16TN0AB
575	600			ECN4761DAU	ECN4762DAU	ECN4763DAU ④	ECN4768DAU	AN16TN0AB
NEMA Size 7PW								
230	450	120	⑤	ECN4771BAU	ECN4772BAU	ECN4773BAU ④	ECN4778BAU	AN16UN0AB
460	900			ECN4771CAU	ECN4772CAU	ECN4773CAU ④	ECN4778CAU	AN16UN0AB
575	900			ECN4771DAU	ECN4772DAU	ECN4773DAU ④	ECN4778DAU	AN16UN0AB
NEMA Size 8PW								
230	700	120	⑤	ECN4781BAU	ECN4782BAU	ECN4783BAU ④	ECN4788BAU	AN16VN0AB
460	1400			ECN4781CAU	ECN4782CAU	ECN4783CAU ④	ECN4788CAU	AN16VN0AB
575	1400			ECN4781DAU	ECN4782DAU	ECN4783DAU ④	ECN4788DAU	AN16VN0AB
Starters do not include heater packs. Select 2 cartons of 3 heater packs (2 overload relays — 1 for each winding). Heater Pack Selection, **Page 16-6**.								

① All reduced voltage starters are furnished with 120V coils and control transformer connected for 120V secondary. If Modification Code **C35** separate control is specified, the control transformer is omitted.

② All Type 12 enclosures are standardized with external reset. For internal reset, order Modification Code **R5**.

③ Type 12 enclosure is without safety door interlock.

④ Type 4 (Painted Steel) Sizes 6 – 8PW.

⑤ Supply hp, voltage, FLA and whether motor is design E or not when ordering starter.

⑥ The Catalog Numbers listed in the Type 4X column are for Type 4X 304-Grade Stainless Steel, as indicated by the seventh digit **4**. Example: ECN4724EAH. To order Type 4X 316-Grade Stainless Steel, change that digit to **9**. To order Type 4 Painted Steel, change that digit to **3**. To order Nonmetallic, change that digit to **5**. For details on these Alternate Enclosures, see **Tab 14**.

Cover Control ..... **Page 6-20**
Other Magnet Coils ..... **Page 6-19**
Dimensions ..... **Page 15-8**
Accessories ..... **Page 16-4**
Modifications ..... **Page 16-40**
Technical Data ..... **Page 18-7**

Features

- Open or Closed Transition
- Non-combination and Combination Designs
- 3-Phase Magnetic, 3-Pole
- Interchangeable Heater OLR
- 600V Maximum

Product Selection

Table 6-26. Class ECN48 — Non-combination Open Transition Wye Delta Starter

NEMA Size	Motor Voltage	Max. hp Rating	Magnet Coil Voltage ①	Type 1 General Purpose	Type 3R Rainproof	Type 4X ④ Water & Dust-Tight Stainless Steel	Type 12 Dust-Tight Industrial External Reset ②	Component Starter (Open) ⑤
				Catalog Number	Catalog Number	Catalog Number	Catalog Number	Catalog Number
2YD	200	20	120	ECN4821EAA	ECN4822EAA	ECN4824EAA	ECN4828EAA	AN16GN0AB
3YD		40		ECN4831EAA	ECN4832EAA	ECN4834EAA	ECN4838EAA	AN16KN0AB
4YD		60		ECN4841EAA	ECN4842EAA	ECN4844EAA	ECN4848EAA	AN16NN0AB
5YD		150		ECN4851EAA	ECN4852EAA	ECN4854EAA	ECN4858EAA	AN16SN0AB
6YD		300		ECN4861EAA	ECN4862EAA	ECN4863EAA ③	ECN4868EAA	AN16TN0AB
7YD		500		ECN4871EAA	ECN4872EAA	ECN4873EAA ③	ECN4878EAA	AN16UN0AB
8YD		750		ECN4881EAA	ECN4882EAA	ECN4883EAA ③	ECN4888EAA	AN16VN0AB
2YD	230	25	120	ECN4821BAA	ECN4822BAA	ECN4824BAA	ECN4828BAA	AN16GN0AB
3YD		50		ECN4831BAA	ECN4832BAA	ECN4834BAA	ECN4838BAA	AN16KN0AB
4YD		75		ECN4841BAA	ECN4842BAA	ECN4844BAA	ECN4848BAA	AN16NN0AB
5YD		150		ECN4851BAA	ECN4852BAA	ECN4854BAA	ECN4858BAA	AN16SN0AB
6YD		350		ECN4861BAA	ECN4862BAA	ECN4863BAA ③	ECN4868BAA	AN16TN0AB
7YD		500		ECN4871BAA	ECN4872BAA	ECN4873BAA ③	ECN4878BAA	AN16UN0AB
8YD		800		ECN4881BAA	ECN4882BAA	ECN4883BAA ③	ECN4888BAA	AN16VN0AB
2YD	460	40	120	ECN4821CAA	ECN4822CAA	ECN4824CAA	ECN4828CAA	AN16GN0AB
3YD		75		ECN4831CAA	ECN4832CAA	ECN4834CAA	ECN4838CAA	AN16KN0AB
4YD		150		ECN4841CAA	ECN4842CAA	ECN4844CAA	ECN4848CAA	AN16NN0AB
5YD		300		ECN4851CAA	ECN4852CAA	ECN4854CAA	ECN4858CAA	AN16SN0AB
6YD		700		ECN4861CAA	ECN4862CAA	ECN4863CAA ③	ECN4868CAA	AN16TN0AB
7YD		1000		ECN4871CAA	ECN4872CAA	ECN4873CAA ③	ECN4878CAA	AN16UN0AB
8YD		1500		ECN4881CAA	ECN4882CAA	ECN4883CAA ③	ECN4888CAA	AN16VN0AB
2YD	575	40	120	ECN4821DAA	ECN4822DAA	ECN4824DAA	ECN4828DAA	AN16GN0AB
3YD		75		ECN4831DAA	ECN4832DAA	ECN4834DAA	ECN4838DAA	AN16KN0AB
4YD		150		ECN4841DAA	ECN4842DAA	ECN4844DAA	ECN4848DAA	AN16NN0AB
5YD		300		ECN4851DAA	ECN4852DAA	ECN4854DAA	ECN4858DAA	AN16SN0AB
6YD		700		ECN4861DAA	ECN4862DAA	ECN4863DAA ③	ECN4868DAA	AN16TN0AB
7YD		1000		ECN4871DAA	ECN4872DAA	ECN4873DAA ③	ECN4878DAA	AN16UN0AB
8YD		1500		ECN4881DAA	ECN4882DAA	ECN4883DAA ③	ECN4888DAA	AN16VN0AB
Starters do not include heater packs. Select 1 carton of 3 heater packs. Heater Pack Selection, **Page 16-6**.								

① All reduced voltage starters are furnished with 120V coils and control transformer connected for 120V secondary. If Modification Code **C35** separate control is specified, the control transformer is omitted.

② All Type 12 enclosures are standardized with external reset. For internal reset, order Modification Code **R5**.

③ Type 4 (Painted Steel) Sizes 6 – 8YD.

④ The Catalog Numbers listed in the Type 4X column are for Type 4X 304-Grade Stainless Steel, as indicated by the seventh digit **4**. Example: ECN4824EAA. To order Type 4X 316-Grade Stainless Steel, change that digit to **9**. To order Type 4 Painted Steel, change that digit to **3**. To order Nonmetallic, change that digit to **5**. For details on these Alternate Enclosures, see **Tab 14**.

⑤ Also requires matching contactor with mechanical interlock.

Cover Control ..... **Page 6-20**
Other Magnet Coils ..... **Page 6-19**
Dimensions ..... **Page 15-8**
Accessories ..... **Page 16-4**
Modifications ..... **Page 16-40**
Technical Data ..... **Page 18-7**

Table 6-27. Class ECN49 — Combination Open Transition Wye Delta Starter — Fusible Disconnect

NEMA Size	Max. hp Rating	Fuse Clip Amps.	Type 1 General Purpose	Type 3R Rainproof	Type 4X ⑥ Water & Dust-Tight Stainless Steel	Type 12 Dust-Tight Industrial External Reset ②③	Component Starter (Open) ⑦
			Catalog Number	Catalog Number	Catalog Number	Catalog Number	Catalog Number
Motor Volts 200/Magnet Coil Voltage 120 ①							
2YD	15	60A	ECN4921EAD-W10/G1	ECN4922EAD-W10/G1	ECN4924EAD-W10/G1	ECN4928EAD-W10/G1	AN16GN0AB
	20	100A	ECN4921EAF-W10/G3	ECN4922EAF-W10/G3	ECN4924EAF-W10/G3	ECN4928EAF-W10/G3	
3YD	25	100A	ECN4931EAF-W10/G8	ECN4932EAF-W10/G8	ECN4934EAF-W10/G8	ECN4938EAF-W10/G8	AN16KN0AB
	30	200A	ECN4931EAH-W10/G13	ECN4932EAH-W10/G13	ECN4934EAH-W10/G13	ECN4938EAH-W10/G13	
	40	200A	ECN4931EAH-W10/G18	ECN4932EAH-W10/G18	ECN4934EAH-W10/G18	ECN4938EAH-W10/G18	
4YD	50	200A	ECN4941EAH-W10/G23	ECN4942EAH-W10/G23	ECN4944EAH-W10/G23	ECN4948EAH-W10/G23	AN16NN0AB
	60	400A	ECN4941EAK-W10/G28	ECN4942EAK-W10/G28	ECN4944EAK-W10/G28	ECN4948EAK-W10/G28	
5YD	75	400A	ECN4951EAK-W10/G33	ECN4952EAK-W10/G33	ECN4954EAK-W10/G33	ECN4958EAK-W10/G33	AN16SN0AB
	100	400A	ECN4951EAK-W10/G38	ECN4952EAK-W10/G38	ECN4954EAK-W10/G38	ECN4958EAK-W10/G38	
	125	600A	ECN4951EAM-W10/G43	ECN4952EAM-W10/G43	ECN4954EAM-W10/G43	ECN4958EAM-W10/G43	
	150	600A	ECN4951EAM-W10/G48	ECN4952EAM-W10/G48	ECN4954EAM-W10/G48	ECN4958EAM-W10/G48	
6YD	200	⑤	ECN4961EAU-W10/G53	ECN4962EAU-W10/G53	ECN4963EAU-W10/G53 ④	ECN4968EAU-W10/G33	AN16TN0AB
	250		ECN4961EAU-W10/G58	ECN4962EAU-W10/G58	ECN4963EAU-W10/G58 ④	ECN4968EAU-W10/G58	
	300		ECN4961EAU-W10/G63	ECN4962EAU-W10/G63	ECN4963EAU-W10/G63 ④	ECN4968EAU-W10/G63	
7YD	350	⑤	ECN4971EAU-W10/G68	ECN4972EAU-W10/G68	ECN4973EAU-W10/G68 ④	ECN4978EAU-W10/G68	AN16UN0AB
	400		ECN4971EAU-W10/G73	ECN4972EAU-W10/G73	ECN4973EAU-W10/G73 ④	ECN4978EAU-W10/G73	
	450		ECN4971EAU-W10/G78	ECN4972EAU-W10/G78	ECN4973EAU-W10/G78 ④	ECN4978EAU-W10/G78	
	500		ECN4971EAU-W10/G83	ECN4972EAU-W10/G83	ECN4973EAU-W10/G83 ④	ECN4978EAU-W10/G83	
8YD	600	⑤	ECN4981EAU-W10/G88	ECN4982EAU-W10/G88	ECN4983EAU-W10/G88 ④	ECN4988EAU-W10/G88	AN16VN0AB
	700		ECN4981EAU-W10/G93	ECN4982EAU-W10/G93	ECN4983EAU-W10/G93 ④	ECN4988EAU-W10/G93	
	750		ECN4981EAU-W10/G98	ECN4982EAU-W10/G98	ECN4983EAU-W10/G98 ④	ECN4988EAU-W10/G98	
Motor Volts 230/Magnet Coil Voltage 120 ①							
2YD	15	60A	ECN4921BAD-W10/G2	ECN4922BAD-W10/G2	ECN4924BAD-W10/G2	ECN4928BAD-W10/G2	AN16GN0AB
	20	100A	ECN4921BAF-W10/G4	ECN4922BAF-W10/G4	ECN4924BAF-W10/G4	ECN4928BAF-W10/G4	
	25	100A	ECN4921BAF-W10/G9	ECN4922BAF-W10/G9	ECN4924BAF-W10/G9	ECN4928BAF-W10/G9	
3YD	30	100A	ECN4931BAF-W10/G14	ECN4932BAF-W10/G14	ECN4934BAF-W10/G14	ECN4938BAF-W10/G14	AN16KN0AB
	40	200A	ECN4931BAH-W10/G19	ECN4932BAH-W10/G19	ECN4934BAH-W10/G19	ECN4938BAH-W10/G19	
	50	200A	ECN4931BAH-W10/G24	ECN4932BAH-W10/G24	ECN4934BAH-W10/G24	ECN4938BAH-W10/G24	
4YD	60	200A	ECN4941BAH-W10/G29	ECN4942BAH-W10/G29	ECN4944BAH-W10/G29	ECN4948BAH-W10/G29	AN16NN0AB
	75	400A	ECN4941BAK-W10/G34	ECN4942BAK-W10/G34	ECN4944BAK-W10/G34	ECN4948BAK-W10/G34	
5YD	100	400A	ECN4951BAK-W10/G39	ECN4952BAK-W10/G39	ECN4954BAK-W10/G39	ECN4958BAK-W10/G39	AN16SN0AB
	125	400A	ECN4951BAK-W10/G44	ECN4952BAK-W10/G44	ECN4954BAK-W10/G44	ECN4958BAK-W10/G44	
	150	600A	ECN4951BAM-W10/G49	ECN4952BAM-W10/G49	ECN4954BAM-W10/G49	ECN4958BAM-W10/G49	
6YD	200	600A	ECN4961BAM-W10/G54	ECN4962BAM-W10/G54	ECN4963BAM-W10/G54 ④	ECN4968BAM-W10/G54	AN16TN0AB
	250	⑤	ECN4961BAU-W10/G59	ECN4962BAU-W10/G59	ECN4963BAU-W10/G59 ④	ECN4968BAU-W10/G59	
	300		ECN4961BAU-W10/G64	ECN4962BAU-W10/G64	ECN4963BAU-W10/G64 ④	ECN4968BAU-W10/G64	
	350		ECN4961BAU-W10/G69	ECN4962BAU-W10/G69	ECN4963BAU-W10/G69 ④	ECN4968BAU-W10/G69	
7YD	400	⑤	ECN4971BAU-W10/G74	ECN4972BAU-W10/G74	ECN4973BAU-W10/G74 ④	ECN4978BAU-W10/G74	AN16UN0AB
	450		ECN4971BAU-W10/G79	ECN4972BAU-W10/G79	ECN4973BAU-W10/G79 ④	ECN4978BAU-W10/G79	
	500		ECN4971BAU-W10/G84	ECN4972BAU-W10/G84	ECN4973BAU-W10/G84 ④	ECN4978BAU-W10/G84	
8YD	600	⑤	ECN4981BAU-W10/G89	ECN4982BAU-W10/G89	ECN4983BAU-W10/G89 ④	ECN4988BAU-W10/G89	AN16VN0AB
	700		ECN4981BAU-W10/G94	ECN4982BAU-W10/G94	ECN4983BAU-W10/G94 ④	ECN4988BAU-W10/G94	
	750		ECN4981BAU-W10/G99	ECN4982BAU-W10/G99	ECN4983BAU-W10/G99 ④	ECN4988BAU-W10/G99	
	800		ECN4981BAU-W10/G103	ECN4982BAU-W10/G103	ECN4983BAU-W10/G103 ④	ECN4988BAU-W10/G103	

Starters do not include heater packs. Select 1 carton of 3 heater packs. Heater Pack Selection, **Page 16-6**.

① All reduced voltage starters are furnished with 120V coils and control transformer connected for 120V secondary. If Modification Code **C35** separate control is specified, the control transformer is omitted.

② All Type 12 enclosures are standardized with external reset. For internal reset, order Modification Code **R5**.

③ Type 12 enclosure is without safety door interlock.

④ Type 4 (Painted Steel) Sizes 6 – 8YD.

⑤ Supply hp, voltage, FLA and whether motor is design E or not when ordering starter.

⑥ The Catalog Numbers listed in the Type 4X column are for Type 4X 304-Grade Stainless Steel, as indicated by the seventh digit **4**. Example: ECN4924EAD. To order Type 4X 316-Grade Stainless Steel, change that digit to **9**. To order Type 4 Painted Steel, change that digit to **3**. To order Nonmetallic, change that digit to **5**. For details on these Alternate Enclosures, see **Tab 14**.

⑦ Also requires matching contactor with mechanical interlock.

Cover Control ..... **Page 6-20**
Other Magnet Coils ..... **Page 6-19**
Dimensions ..... **Page 15-8**
Accessories ..... **Page 16-4**
Modifications ..... **Page 16-40**
Technical Data ..... **Page 18-7**

Table 6-27. Class ECN49 — Combination Open Transition Wye Delta Starter — Fusible Disconnect (Continued)

NEMA Size	Max. hp Rating	Fuse Clip Amps.	Type 1 General Purpose	Type 3R Rainproof	Type 4X ⑥ Water & Dust-Tight Stainless Steel	Type 12 Dust-Tight Industrial External Reset ②③	Component Starter (Open) ⑦
			Catalog Number	Catalog Number	Catalog Number	Catalog Number	Catalog Number
Motor Volts 460/Magnet Coil Voltage 120 ①							
2YD	20	60A	ECN4921CAE-W10/G6	ECN4922CAE-W10/G6	ECN4924CAE-W10/G6	ECN4928CAE-W10/G6	AN16GN0AB
	25	60A	ECN4921CAE-W10/G11	ECN4922CAE-W10/G11	ECN4924CAE-W10/G11	ECN4928CAE-W10/G11	
	30	60A	ECN4921CAE-W10/G16	ECN4922CAE-W10/G16	ECN4924CAE-W10/G16	ECN4928CAE-W10/G16	
	40	60A	ECN4921CAE-W10/G21	ECN4922CAE-W10/G21	ECN4924CAE-W10/G21	ECN4928CAE-W10/G21	
3YD	50	100A	ECN4931CAG-W10/G26	ECN4932CAG-W10/G26	ECN4934CAG-W10/G26	ECN4938CAG-W10/G26	AN16KN0AB
	60	100A	ECN4931CAG-W10/G31	ECN4932CAG-W10/G31	ECN4934CAG-W10/G31	ECN4938CAG-W10/G31	
	75	200A	ECN4931CAJ-W10/G36	ECN4932CAJ-W10/G36	ECN4934CAJ-W10/G36	ECN4938CAJ-W10/G36	
4YD	100	200A	ECN4941CAJ-W10/G41	ECN4942CAJ-W10/G41	ECN4944CAJ-W10/G41	ECN4948CAJ-W10/G41	AN16NN0AB
	125	200A	ECN4941CAJ-W10/G46	ECN4942CAJ-W10/G46	ECN4944CAJ-W10/G46	ECN4948CAJ-W10/G46	
	150	400A	ECN4941CAL-W10/G51	ECN4942CAL-W10/G51	ECN4944CAL-W10/G51	ECN4948CAL-W10/G51	
5YD	200	400A	ECN4951CAL-W10/G56	ECN4952CAL-W10/G56	ECN4954CAL-W10/G56	ECN4958CAL-W10/G56	AN16SN0AB
	250	400A	ECN4951CAL-W10/G61	ECN4952CAL-W10/G61	ECN4954CAL-W10/G61	ECN4958CAL-W10/G61	
	300	600A	ECN4951CAN-W10/G66	ECN4952CAN-W10/G66	ECN4954CAN-W10/G66	ECN4958CAN-W10/G66	
6YD	350	600A	ECN4961CAN-W10/G71	ECN4962CAN-W10/G71	ECN4963CAN-W10/G71 ④	ECN4968CAN-W10/G71	AN16TN0AB
	400	600A	ECN4961CAN-W10/G76	ECN4962CAN-W10/G76	ECN4963CAN-W10/G76 ④	ECN4968CAN-W10/G76	
	450	600A	ECN4961CAN-W10/G81	ECN4962CAN-W10/G81	ECN4963CAN-W10/G81 ④	ECN4968CAN-W10/G81	
	500	800A	ECN4961CAP-W10/G86	ECN4962CAP-W10/G86	ECN4963CAP-W10/G86 ④	ECN4968CAP-W10/G86	
	600	1200A	ECN4961CAQ-W10/G91	ECN4962CAQ-W10/G91	ECN4963CAQ-W10/G91 ④	ECN4968CAQ-W10/G91	
	700	1200A	ECN4961CAQ-W10/G96	ECN4962CAQ-W10/G96	ECN4963CAQ-W10/G96 ④	ECN4968CAQ-W10/G96	
7YD	750	1200A	ECN4971CAQ-W10/G101	ECN4972CAQ-W10/G101	ECN4973CAQ-W10/G101 ④	ECN4978CAQ-W10/G101	AN16UN0AB
	800	⑤	ECN4971CAU-W10/G105	ECN4972CAU-W10/G105	ECN4973CAU-W10/G105 ④	ECN4978CAU-W10/G105	
	900		ECN4971CAU-W10/G108	ECN4972CAU-W10/G108	ECN4973CAU-W10/G108 ④	ECN4978CAU-W10/G108	
	1000		ECN4971CAU-W10/G111	ECN4972CAU-W10/G111	ECN4973CAU-W10/G111 ④	ECN4978CAU-W10/G111	
8YD	1250	⑤	ECN4981CAU-W10/G114	ECN4982CAU-W10/G114	ECN4983CAU-W10/G114 ④	ECN4988CAU-W10/G114	AN16VN0AB
	1500		ECN4981CAU-W10/G117	ECN4982CAU-W10/G117	ECN4983CAU-W10/G117 ④	ECN4988CAU-W10/G117	
Motor Volts 575/Magnet Coil Voltage 120 ①							
2YD	20	30A	ECN4921DAC-W10/G7	ECN4922DAC-W10/G7	ECN4924DAC-W10/G7	ECN4928DAC-W10/G7	AN16GN0AB
	25	60A	ECN4921DAE-W10/G12	ECN4922DAE-W10/G12	ECN4924DAE-W10/G12	ECN4928DAE-W10/G12	
	30	60A	ECN4921DAE-W10/G17	ECN4922DAE-W10/G17	ECN4924DAE-W10/G17	ECN4928DAE-W10/G17	
	40	60A	ECN4921DAE-W10/G22	ECN4922DAE-W10/G22	ECN4924DAE-W10/G22	ECN4928DAE-W10/G22	
3YD	50	100A	ECN4931DAG-W10/G27	ECN4932DAG-W10/G27	ECN4934DAG-W10/G27	ECN4938DAG-W10/G27	AN16KN0AB
	60	100A	ECN4931DAG-W10/G32	ECN4932DAG-W10/G32	ECN4934DAG-W10/G32	ECN4938DAG-W10/G32	
	75	100A	ECN4931DAG-W10/G37	ECN4932DAG-W10/G37	ECN4934DAG-W10/G37	ECN4938DAG-W10/G37	
4YD	100	200A	ECN4941DAJ-W10/G42	ECN4942DAJ-W10/G42	ECN4944DAJ-W10/G42	ECN4948DAJ-W10/G42	AN16NN0AB
	125	200A	ECN4941DAJ-W10/G47	ECN4942DAJ-W10/G47	ECN4944DAJ-W10/G47	ECN4948DAJ-W10/G47	
	150	200A	ECN4941DAJ-W10/G52	ECN4942DAJ-W10/G52	ECN4944DAJ-W10/G52	ECN4948DAJ-W10/G52	
5YD	200	400A	ECN4951DAL-W10/G57	ECN4952DAL-W10/G57	ECN4954DAL-W10/G57	ECN4958DAL-W10/G57	AN16SN0AB
	250	400A	ECN4951DAL-W10/G62	ECN4952DAL-W10/G62	ECN4954DAL-W10/G62	ECN4958DAL-W10/G62	
	300	400A	ECN4951DAL-W10/G67	ECN4952DAL-W10/G67	ECN4954DAL-W10/G67	ECN4958DAL-W10/G67	
6YD	350	400A	ECN4961DAL-W10/G72	ECN4962DAL-W10/G72	ECN4963DAL-W10/G72 ④	ECN4968DAL-W10/G72	AN16TN0AB
	400	600A	ECN4961DAN-W10/G77	ECN4962DAN-W10/G77	ECN4963DAN-W10/G77 ④	ECN4968DAN-W10/G77	
	450	600A	ECN4961DAN-W10/G82	ECN4962DAN-W10/G82	ECN4963DAN-W10/G82 ④	ECN4968DAN-W10/G82	
	500	600A	ECN4961DAN-W10/G87	ECN4962DAN-W10/G87	ECN4963DAN-W10/G87 ④	ECN4968DAN-W10/G87	
	600	800A	ECN4961DAP-W10/G92	ECN4962DAP-W10/G92	ECN4963DAP-W10/G92 ④	ECN4968DAP-W10/G92	
	700	800A	ECN4961DAP-W10/G97	ECN4962DAP-W10/G97	ECN4963DAP-W10/G97 ④	ECN4968DAP-W10/G97	
7YD	750	⑤	ECN4971DAU-W10/G102	ECN4972DAU-W10/G102	ECN4973DAU-W10/G102 ④	ECN4978DAU-W10/G102	AN16UN0AB
	800		ECN4971DAU-W10/G106	ECN4972DAU-W10/G106	ECN4973DAU-W10/G106 ④	ECN4978DAU-W10/G106	
	900		ECN4971DAU-W10/G109	ECN4972DAU-W10/G109	ECN4973DAU-W10/G109 ④	ECN4978DAU-W10/G109	
	1000		ECN4971DAU-W10/G112	ECN4972DAU-W10/G112	ECN4973DAU-W10/G112 ④	ECN4978DAU-W10/G112	
8YD	1250	⑤	ECN4981DAU-W10/G115	ECN4982DAU-W10/G115	ECN4983DAU-W10/G115 ④	ECN4988DAU-W10/G115	AN16VN0AB
	1500		ECN4981DAU-W10/G118	ECN4982DAU-W10/G118	ECN4983DAU-W10/G118 ④	ECN4988DAU-W10/G118	

Starters do not include heater packs. Select 1 carton of 3 heater packs. Heater Pack Selection, **Page 16-6**.

① All reduced voltage starters are furnished with 120V coils and control transformer connected for 120V secondary. If Modification Code **C35** separate control is specified, the control transformer is omitted.

② All Type 12 enclosures are standardized with external reset. For internal reset, order Modification Code **R5**.

③ Type 12 enclosure is without safety door interlock.

④ Type 4 (Painted Steel) Sizes 6 – 8YD.

⑤ Supply hp, voltage, FLA and whether motor is design E or not when ordering starter.

⑥ The Catalog Numbers listed in the Type 4X column are for Type 4X 304-Grade Stainless Steel, as indicated by the seventh digit **4**. Example: ECN4924CAE. To order Type 4X 316-Grade Stainless Steel, change that digit to **9**. To order Type 4 Painted Steel, change that digit to **3**. To order Nonmetallic, change that digit to **5**. For details on these Alternate Enclosures, see **Tab 14**.

⑦ Also requires matching contactor with mechanical interlock.

Cover Control ..... **Page 6-20**
Other Magnet Coils ..... **Page 6-19**
Dimensions ..... **Page 15-8**
Accessories ..... **Page 16-4**
Modifications ..... **Page 16-40**
Technical Data ..... **Page 18-7**

Table 6-28. Class ECN49 — Combination Open Transition Wye Delta Starter — Non-fusible Disconnect

NEMA Size	Max. hp Rating	Dis-connect Amps.	Type 1 General Purpose	Type 3R Rainproof	Type 4X ⑥ Water & Dust-Tight Stainless Steel	Type 12 Dust-Tight Industrial External Reset ②③	Component Starter (Open) ⑦
			Catalog Number	Catalog Number	Catalog Number	Catalog Number	Catalog Number
Motor Volts 200/Magnet Coil Voltage 120 ①							
2YD	15	60A	ECN4921EAA-W10/G1	ECN4922EAA-W10/G1	ECN4924EAA-W10/G1	ECN4928EAA-W10/G1	AN16GN0AB
	20	100A	ECN4921EAA-W10/G3	ECN4922EAA-W10/G3	ECN4924EAA-W10/G3	ECN4928EAA-W10/G3	
3YD	25	100A	ECN4931EAA-W10/G8	ECN4932EAA-W10/G8	ECN4934EAA-W10/G8	ECN4938EAA-W10/G8	AN16KN0AB
	30	200A	ECN4931EAA-W10/G13	ECN4932EAA-W10/G13	ECN4934EAA-W10/G13	ECN4938EAA-W10/G13	
	40	200A	ECN4931EAA-W10/G18	ECN4932EAA-W10/G18	ECN4934EAA-W10/G18	ECN4938EAA-W10/G18	
4YD	50	200A	ECN4941EAA-W10/G23	ECN4942EAA-W10/G23	ECN4944EAA-W10/G23	ECN4948EAA-W10/G23	AN16NN0AB
	60	400A	ECN4941EAA-W10/G28	ECN4942EAA-W10/G28	ECN4944EAA-W10/G28	ECN4948EAA-W10/G28	
5YD	75	400A	ECN4951EAA-W10/G33	ECN4952EAA-W10/G33	ECN4954EAA-W10/G33	ECN4958EAA-W10/G33	AN16SN0AB
	100	400A	ECN4951EAA-W10/G38	ECN4952EAA-W10/G38	ECN4954EAA-W10/G38	ECN4958EAA-W10/G38	
	125	600A	ECN4951EAA-W10/G43	ECN4952EAA-W10/G43	ECN4954EAA-W10/G43	ECN4958EAA-W10/G43	
	150	600A	ECN4951EAA-W10/G48	ECN4952EAA-W10/G48	ECN4954EAA-W10/G48	ECN4958EAA-W10/G48	
6YD	200	⑤	ECN4961EAA-W10/G53	ECN4962EAA-W10/G53	ECN4963EAA-W10/G53 ④	ECN4968EAA-W10/G33	AN16TN0AB
	250		ECN4961EAA-W10/G58	ECN4962EAA-W10/G58	ECN4963EAA-W10/G58 ④	ECN4968EAA-W10/G58	
	300		ECN4961EAA-W10/G63	ECN4962EAA-W10/G63	ECN4963EAA-W10/G63 ④	ECN4968EAA-W10/G63	
7YD	350	⑤	ECN4971EAA-W10/G68	ECN4972EAA-W10/G68	ECN4973EAA-W10/G68 ④	ECN4978EAA-W10/G68	AN16UN0AB
	400		ECN4971EAA-W10/G73	ECN4972EAA-W10/G73	ECN4973EAA-W10/G73 ④	ECN4978EAA-W10/G73	
	450		ECN4971EAA-W10/G78	ECN4972EAA-W10/G78	ECN4973EAA-W10/G78 ④	ECN4978EAA-W10/G78	
	500		ECN4971EAA-W10/G83	ECN4972EAA-W10/G83	ECN4973EAA-W10/G83 ④	ECN4978EAA-W10/G83	
8YD	600	⑤	ECN4981EAA-W10/G88	ECN4982EAA-W10/G88	ECN4983EAA-W10/G88 ④	ECN4988EAA-W10/G88	AN16VN0AB
	700		ECN4981EAA-W10/G93	ECN4982EAA-W10/G93	ECN4983EAA-W10/G93 ④	ECN4988EAA-W10/G93	
	750		ECN4981EAA-W10/G98	ECN4982EAA-W10/G98	ECN4983EAA-W10/G98 ④	ECN4988EAA-W10/G98	
Motor Volts 230/Magnet Coil Voltage 120 ①							
2YD	15	60A	ECN4921BAA-W10/G2	ECN4922BAA-W10/G2	ECN4924BAA-W10/G2	ECN4928BAA-W10/G2	AN16GN0AB
	20	100A	ECN4921BAA-W10/G4	ECN4922BAA-W10/G4	ECN4924BAA-W10/G4	ECN4928BAA-W10/G4	
	25	100A	ECN4921BAA-W10/G9	ECN4922BAA-W10/G9	ECN4924BAA-W10/G9	ECN4928BAA-W10/G9	
3YD	30	100A	ECN4931BAA-W10/G14	ECN4932BAA-W10/G14	ECN4934BAA-W10/G14	ECN4938BAA-W10/G14	AN16KN0AB
	40	200A	ECN4931BAA-W10/G19	ECN4932BAA-W10/G19	ECN4934BAA-W10/G19	ECN4938BAA-W10/G19	
	50	200A	ECN4931BAA-W10/G24	ECN4932BAA-W10/G24	ECN4934BAA-W10/G24	ECN4938BAA-W10/G24	
4YD	60	200A	ECN4941BAA-W10/G29	ECN4942BAA-W10/G29	ECN4944BAA-W10/G29	ECN4948BAA-W10/G29	AN16NN0AB
	75	400A	ECN4941BAA-W10/G34	ECN4942BAA-W10/G34	ECN4944BAA-W10/G34	ECN4948BAA-W10/G34	
5YD	100	400A	ECN4951BAA-W10/G39	ECN4952BAA-W10/G39	ECN4954BAA-W10/G39	ECN4958BAA-W10/G39	AN16SN0AB
	125	400A	ECN4951BAA-W10/G44	ECN4952BAA-W10/G44	ECN4954BAA-W10/G44	ECN4958BAA-W10/G44	
	150	600A	ECN4951BAA-W10/G49	ECN4952BAA-W10/G49	ECN4954BAA-W10/G49	ECN4958BAA-W10/G49	
6YD	200	600A	ECN4961BAA-W10/G54	ECN4962BAA-W10/G54	ECN4963BAA-W10/G54 ④	ECN4968BAA-W10/G54	AN16TN0AB
	250	⑤	ECN4961BAA-W10/G59	ECN4962BAA-W10/G59	ECN4963BAA-W10/G59 ④	ECN4968BAA-W10/G59	
	300		ECN4961BAA-W10/G64	ECN4962BAA-W10/G64	ECN4963BAA-W10/G64 ④	ECN4968BAA-W10/G64	
	350		ECN4961BAA-W10/G69	ECN4962BAA-W10/G69	ECN4963BAA-W10/G69 ④	ECN4968BAA-W10/G69	
7YD	400	⑤	ECN4971BAA-W10/G74	ECN4972BAA-W10/G74	ECN4973BAA-W10/G74 ④	ECN4978BAA-W10/G74	AN16UN0AB
	450		ECN4971BAA-W10/G79	ECN4972BAA-W10/G79	ECN4973BAA-W10/G79 ④	ECN4978BAA-W10/G79	
	500		ECN4971BAA-W10/G84	ECN4972BAA-W10/G84	ECN4973BAA-W10/G84 ④	ECN4978BAA-W10/G84	
8YD	600	⑤	ECN4981BAA-W10/G89	ECN4982BAA-W10/G89	ECN4983BAA-W10/G89 ④	ECN4988BAA-W10/G89	AN16VN0AB
	700		ECN4981BAA-W10/G94	ECN4982BAA-W10/G94	ECN4983BAA-W10/G94 ④	ECN4988BAA-W10/G94	
	750		ECN4981BAA-W10/G99	ECN4982BAA-W10/G99	ECN4983BAA-W10/G99 ④	ECN4988BAA-W10/G99	
	800		ECN4981BAA-W10/G103	ECN4982BAA-W10/G103	ECN4983BAA-W10/G103 ④	ECN4988BAA-W10/G103	

Starters do not include heater packs. Select 1 carton of 3 heater packs. Heater Pack Selection, **Page 16-6**.

① All reduced voltage starters are furnished with 120V coils and control transformer connected for 120V secondary. If Modification Code **C35** separate control is specified, the control transformer is omitted.

② All Type 12 enclosures are standardized with external reset. For internal reset, order Modification Code **R5**.

③ Type 12 enclosure is without safety door interlock.

④ Type 4 (Painted Steel) Sizes 6 – 8YD.

⑤ Supply hp, voltage, FLA and whether motor is design E or not when ordering starter.

⑥ The Catalog Numbers listed in the Type 4X column are for Type 4X 304-Grade Stainless Steel, as indicated by the seventh digit **4**. Example: ECN4924EAA. To order Type 4X 316-Grade Stainless Steel, change that digit to **9**. To order Type 4 Painted Steel, change that digit to **3**. To order Nonmetallic, change that digit to **5**. For details on these Alternate Enclosures, see **Tab 14**.

⑦ Also requires matching contactor with mechanical interlock.

Cover Control ..... **Page 6-20**
Other Magnet Coils ..... **Page 6-19**
Dimensions ..... **Page 15-8**
Accessories ..... **Page 16-4**
Modifications ..... **Page 16-40**
Technical Data ..... **Page 18-7**

Table 6-28. Class ECN49 — Combination Open Transition Wye Delta Starter — Non-fusible Disconnect (Continued)

NEMA Size	Max. hp Rating	Dis-connect Amps.	Type 1 General Purpose	Type 3R Rainproof	Type 4X ⑥ Water & Dust-Tight Stainless Steel	Type 12 Dust-Tight Industrial External Reset ②③	Component Starter (Open) ⑦
			Catalog Number	Catalog Number	Catalog Number	Catalog Number	Catalog Number
Motor Volts 460/Magnet Coil Voltage 120 ①							
2YD	20	60A	ECN4921CAA-W10/G6	ECN4922CAA-W10/G6	ECN4924CAA-W10/G6	ECN4928CAA-W10/G6	AN16GN0AB
	25	60A	ECN4921CAA-W10/G11	ECN4922CAA-W10/G11	ECN4924CAA-W10/G11	ECN4928CAA-W10/G11	
	30	60A	ECN4921CAA-W10/G16	ECN4922CAA-W10/G16	ECN4924CAA-W10/G16	ECN4928CAA-W10/G16	
	40	60A	ECN4921CAA-W10/G21	ECN4922CAA-W10/G21	ECN4924CAA-W10/G21	ECN4928CAA-W10/G21	
3YD	50	100A	ECN4931CAA-W10/G26	ECN4932CAA-W10/G26	ECN4934CAA-W10/G26	ECN4938CAA-W10/G26	AN16KN0AB
	60	100A	ECN4931CAA-W10/G31	ECN4932CAA-W10/G31	ECN4934CAA-W10/G31	ECN4938CAA-W10/G31	
	75	200A	ECN4931CAA-W10/G36	ECN4932CAA-W10/G36	ECN4934CAA-W10/G36	ECN4938CAA-W10/G36	
4YD	100	200A	ECN4941CAA-W10/G41	ECN4942CAA-W10/G41	ECN4944CAA-W10/G41	ECN4948CAA-W10/G41	AN16NN0AB
	125	200A	ECN4941CAA-W10/G46	ECN4942CAA-W10/G46	ECN4944CAA-W10/G46	ECN4948CAA-W10/G46	
	150	400A	ECN4941CAA-W10/G51	ECN4942CAA-W10/G51	ECN4944CAA-W10/G51	ECN4948CAA-W10/G51	
5YD	200	400A	ECN4951CAA-W10/G56	ECN4952CAA-W10/G56	ECN4954CAA-W10/G56	ECN4958CAA-W10/G56	AN16SN0AB
	250	400A	ECN4951CAA-W10/G61	ECN4952CAA-W10/G61	ECN4954CAA-W10/G61	ECN4958CAA-W10/G61	
	300	600A	ECN4951CAA-W10/G66	ECN4952CAA-W10/G66	ECN4954CAA-W10/G66	ECN4958CAA-W10/G66	
6YD	350	600A	ECN4961CAA-W10/G71	ECN4962CAA-W10/G71	ECN4963CAA-W10/G71 ④	ECN4968CAA-W10/G71	AN16TN0AB
	400	600A	ECN4961CAA-W10/G76	ECN4962CAA-W10/G76	ECN4963CAA-W10/G76 ④	ECN4968CAA-W10/G76	
	450	600A	ECN4961CAA-W10/G81	ECN4962CAA-W10/G81	ECN4963CAA-W10/G81 ④	ECN4968CAA-W10/G81	
	500	800A	ECN4961CAA-W10/G86	ECN4962CAA-W10/G86	ECN4963CAA-W10/G86 ④	ECN4968CAA-W10/G86	
	600	1200A	ECN4961CAA-W10/G91	ECN4962CAA-W10/G91	ECN4963CAA-W10/G91 ④	ECN4968CAA-W10/G91	
	700	1200A	ECN4961CAA-W10/G96	ECN4962CAA-W10/G96	ECN4963CAA-W10/G96 ④	ECN4968CAA-W10/G96	
7YD	750	1200A	ECN4971CAA-W10/G101	ECN4972CAA-W10/G101	ECN4973CAA-W10/G101 ④	ECN4978CAA-W10/G101	AN16UN0AB
	800	⑤	ECN4971CAA-W10/G105	ECN4972CAA-W10/G105	ECN4973CAA-W10/G105 ④	ECN4978CAA-W10/G105	
	900		ECN4971CAA-W10/G108	ECN4972CAA-W10/G108	ECN4973CAA-W10/G108 ④	ECN4978CAA-W10/G108	
	1000		ECN4971CAA-W10/G111	ECN4972CAA-W10/G111	ECN4973CAA-W10/G111 ④	ECN4978CAA-W10/G111	
8YD	1250	⑤	ECN4981CAA-W10/G114	ECN4982CAA-W10/G114	ECN4983CAA-W10/G114 ④	ECN4988CAA-W10/G114	AN16VN0AB
	1500		ECN4981CAA-W10/G117	ECN4982CAA-W10/G117	ECN4983CAA-W10/G117 ④	ECN4988CAA-W10/G117	
Motor Volts 575/Magnet Coil Voltage 120 ①							
2YD	20	30A	ECN4921DAA-W10/G7	ECN4922DAA-W10/G7	ECN4924DAA-W10/G7	ECN4928DAA-W10/G7	AN16GN0AB
	25	60A	ECN4921DAA-W10/G12	ECN4922DAA-W10/G12	ECN4924DAA-W10/G12	ECN4928DAA-W10/G12	
	30	60A	ECN4921DAA-W10/G17	ECN4922DAA-W10/G17	ECN4924DAA-W10/G17	ECN4928DAA-W10/G17	
	40	60A	ECN4921DAA-W10/G22	ECN4922DAA-W10/G22	ECN4924DAA-W10/G22	ECN4928DAA-W10/G22	
3YD	50	100A	ECN4931DAA-W10/G27	ECN4932DAA-W10/G27	ECN4934DAA-W10/G27	ECN4938DAA-W10/G27	AN16KN0AB
	60	100A	ECN4931DAA-W10/G32	ECN4932DAA-W10/G32	ECN4934DAA-W10/G32	ECN4938DAA-W10/G32	
	75	100A	ECN4931DAA-W10/G37	ECN4932DAA-W10/G37	ECN4934DAA-W10/G37	ECN4938DAA-W10/G37	
4YD	100	200A	ECN4941DAA-W10/G42	ECN4942DAA-W10/G42	ECN4944DAA-W10/G42	ECN4948DAA-W10/G42	AN16NN0AB
	125	200A	ECN4941DAA-W10/G47	ECN4942DAA-W10/G47	ECN4944DAA-W10/G47	ECN4948DAA-W10/G47	
	150	200A	ECN4941DAA-W10/G52	ECN4942DAA-W10/G52	ECN4944DAA-W10/G52	ECN4948DAA-W10/G52	
5YD	200	400A	ECN4951DAA-W10/G57	ECN4952DAA-W10/G57	ECN4954DAA-W10/G57	ECN4958DAA-W10/G57	AN16SN0AB
	250	400A	ECN4951DAA-W10/G62	ECN4952DAA-W10/G62	ECN4954DAA-W10/G62	ECN4958DAA-W10/G62	
	300	400A	ECN4951DAA-W10/G67	ECN4952DAA-W10/G67	ECN4954DAA-W10/G67	ECN4958DAA-W10/G67	
6YD	350	400A	ECN4961DAA-W10/G72	ECN4962DAA-W10/G72	ECN4963DAA-W10/G72 ④	ECN4968DAA-W10/G72	AN16TN0AB
	400	600A	ECN4961DAA-W10/G77	ECN4962DAA-W10/G77	ECN4963DAA-W10/G77 ④	ECN4968DAA-W10/G77	
	450	600A	ECN4961DAA-W10/G82	ECN4962DAA-W10/G82	ECN4963DAA-W10/G82 ④	ECN4968DAA-W10/G82	
	500	600A	ECN4961DAA-W10/G87	ECN4962DAA-W10/G87	ECN4963DAA-W10/G87 ④	ECN4968DAA-W10/G87	
	600	800A	ECN4961DAA-W10/G92	ECN4962DAA-W10/G92	ECN4963DAA-W10/G92 ④	ECN4968DAA-W10/G92	
	700	800A	ECN4961DAA-W10/G97	ECN4962DAA-W10/G97	ECN4963DAA-W10/G97 ④	ECN4968DAA-W10/G97	
7YD	750	⑤	ECN4971DAA-W10/G102	ECN4972DAA-W10/G102	ECN4973DAA-W10/G102 ④	ECN4978DAA-W10/G102	AN16UN0AB
	800		ECN4971DAA-W10/G106	ECN4972DAA-W10/G106	ECN4973DAA-W10/G106 ④	ECN4978DAA-W10/G106	
	900		ECN4971DAA-W10/G109	ECN4972DAA-W10/G109	ECN4973DAA-W10/G109 ④	ECN4978DAA-W10/G109	
	1000		ECN4971DAA-W10/G112	ECN4972DAA-W10/G112	ECN4973DAA-W10/G112 ④	ECN4978DAA-W10/G112	
8YD	1250	⑤	ECN4981DAA-W10/G115	ECN4982DAA-W10/G115	ECN4983DAA-W10/G115 ④	ECN4988DAA-W10/G115	AN16VN0AB
	1500		ECN4981DAA-W10/G118	ECN4982DAA-W10/G118	ECN4983DAA-W10/G118 ④	ECN4988DAA-W10/G118	

Starters do not include heater packs. Select 1 carton of 3 heater packs. Heater Pack Selection, **Page 16-6**.

① All reduced voltage starters are furnished with 120V coils and control transformer connected for 120V secondary. If Modification Code **C35** separate control is specified, the control transformer is omitted.

② All Type 12 enclosures are standardized with external reset. For internal reset, order Modification Code **R5**.

③ Type 12 enclosure is without safety door interlock.

④ Type 4 (Painted Steel) Sizes 6 – 8YD.

⑤ Supply hp, voltage, FLA and whether motor is design E or not when ordering starter.

⑥ The Catalog Numbers listed in the Type 4X column are for Type 4X 304-Grade Stainless Steel, as indicated by the seventh digit **4**. Example: ECN4924CAA. To order Type 4X 316-Grade Stainless Steel, change that digit to **9**. To order Type 4 Painted Steel, change that digit to **3**. To order Nonmetallic, change that digit to **5**. For details on these Alternate Enclosures, see **Tab 14**.

⑦ Also requires matching contactor with mechanical interlock.

Cover Control ..... **Page 6-20**
Other Magnet Coils ..... **Page 6-19**
Dimensions ..... **Page 15-8**
Accessories ..... **Page 16-4**
Modifications ..... **Page 16-40**
Technical Data ..... **Page 18-7**

Table 6-29. Class ECN50 — Combination Open Transition Wye Delta Starter — Circuit Breaker

NEMA Size	Max. hp Rating	Circuit Breaker Type	Type 1 General Purpose	Type 3R Rainproof	Type 4X ⑥ Water & Dust-Tight Stainless Steel	Type 12 Dust-Tight Industrial External Reset ②③	Component Starter (Open) ⑦
			Catalog Number	Catalog Number	Catalog Number	Catalog Number	Catalog Number
Motor Volts 200/Magnet Coil Voltage 120 ①							
2YD	15	70A	ECN5021EAH-W10/G1	ECN5022EAH-W10/G1	ECN5024EAH-W10/G1	ECN5028EAH-W10/G1	AN16GN0AB
	20	90A	ECN5021EAJ-W10/G3	ECN5022EAJ-W10/G3	ECN5024EAJ-W10/G3	ECN5028EAJ-W10/G3	
3YD	25	100A	ECN5031EAK-W10/G8	ECN5032EAK-W10/G8	ECN5034EAK-W10/G8	ECN5038EAK-W10/G8	AN16KN0AB
	30	125A	ECN5031EAL-W10/G13	ECN5032EAL-W10/G13	ECN5034EAL-W10/G13	ECN5038EAL-W10/G13	
	40	175A	ECN5031EAN-W10/G18	ECN5032EAN-W10/G18	ECN5034EAN-W10/G18	ECN5038EAN-W10/G18	
4YD	50	200A	ECN5041EAP-W10/G23	ECN5042EAP-W10/G23	ECN5044EAP-W10/G23	ECN5048EAP-W10/G23	AN16NN0AB
	60	225A	ECN5041EAQ-W10/G28	ECN5042EAQ-W10/G28	ECN5044EAQ-W10/G28	ECN5048EAQ-W10/G28	
5YD	75	300A	ECN5051EAS-W10/G33	ECN5052EAS-W10/G33	ECN5054EAS-W10/G33	ECN5058EAS-W10/G33	AN16SN0AB
	100	350A	ECN5051EAV-W10/G38	ECN5052EAV-W10/G38	ECN5054EAV-W10/G38	ECN5058EAV-W10/G38	
	125	450A	ECN5051EAX-W10/G43	ECN5052EAX-W10/G43	ECN5054EAX-W10/G43	ECN5058EAX-W10/G43	
	150	500A	ECN5051EAY-W10/G48	ECN5052EAY-W10/G48	ECN5054EAY-W10/G48	ECN5058EAY-W10/G48	
6YD	200	800A	ECN5061EA2-W10/G53	ECN5062EA2-W10/G53	ECN5063EA2-W10/G53 ④	ECN5068EA2-W10/G33	AN16TN0AB
	250	1000A	ECN5061EA3-W10/G58	ECN5062EA3-W10/G58	ECN5063EA3-W10/G58 ④	ECN5068EA3-W10/G58	
	300	1200A	ECN5061EA4-W10/G63	ECN5062EA4-W10/G63	ECN5063EA4-W10/G63 ④	ECN5068EA4-W10/G63	
7YD	350	⑤	ECN5071EAU-W10/G68	ECN5072EAU-W10/G68	ECN5073EAU-W10/G68 ④	ECN5078EAU-W10/G68	AN16UN0AB
	400		ECN5071EAU-W10/G73	ECN5072EAU-W10/G73	ECN5073EAU-W10/G73 ④	ECN5078EAU-W10/G73	
	450		ECN5071EAU-W10/G78	ECN5072EAU-W10/G78	ECN5073EAU-W10/G78 ④	ECN5078EAU-W10/G78	
	500		ECN5071EAU-W10/G83	ECN5072EAU-W10/G83	ECN5073EAU-W10/G83 ④	ECN5078EAU-W10/G83	
8YD	600	⑤	ECN5081EAU-W10/G88	ECN5082EAU-W10/G88	ECN5083EAU-W10/G88 ④	ECN5088EAU-W10/G88	AN16VN0AB
	700		ECN5081EAU-W10/G93	ECN5082EAU-W10/G93	ECN5083EAU-W10/G93 ④	ECN5088EAU-W10/G93	
	750		ECN5081EAU-W10/G98	ECN5082EAU-W10/G98	ECN5083EAU-W10/G98 ④	ECN5088EAU-W10/G98	
Motor Volts 230/Magnet Coil Voltage 120 ①							
2YD	15	60A	ECN5021BAG-W10/G2	ECN5022BAG-W10/G2	ECN5024BAG-W10/G2	ECN5028BAG-W10/G2	AN16GN0AB
	20	70A	ECN5021BAH-W10/G4	ECN5022BAH-W10/G4	ECN5024BAH-W10/G4	ECN5028BAH-W10/G4	
	25	90A	ECN5021BAJ-W10/G9	ECN5022BAJ-W10/G9	ECN5024BAJ-W10/G9	ECN5028BAJ-W10/G9	
3YD	30	125A	ECN5031BAL-W10/G14	ECN5032BAL-W10/G14	ECN5034BAL-W10/G14	ECN5038BAL-W10/G14	AN16KN0AB
	40	150A	ECN5031BAM-W10/G19	ECN5032BAM-W10/G19	ECN5034BAM-W10/G19	ECN5038BAM-W10/G19	
	50	175A	ECN5031BAN-W10/G24	ECN5032BAN-W10/G24	ECN5034BAN-W10/G24	ECN5038BAN-W10/G24	
4YD	60	200A	ECN5041BAP-W10/G29	ECN5042BAP-W10/G29	ECN5044BAP-W10/G29	ECN5048BAP-W10/G29	AN16NN0AB
	75	250A	ECN5041BAR-W10/G34	ECN5042BAR-W10/G34	ECN5044BAR-W10/G34	ECN5048BAR-W10/G34	
5YD	100	350A	ECN5051BAV-W10/G39	ECN5052BAV-W10/G39	ECN5054BAV-W10/G39	ECN5058BAV-W10/G39	AN16SN0AB
	125	400A	ECN5051BAW-W10/G44	ECN5052BAW-W10/G44	ECN5054BAW-W10/G44	ECN5058BAW-W10/G44	
	150	500A	ECN5051BAY-W10/G49	ECN5052BAY-W10/G49	ECN5054BAY-W10/G49	ECN5058BAY-W10/G49	
6YD	200	600A	ECN5061BAZ-W10/G54	ECN5062BAZ-W10/G54	ECN5063BAZ-W10/G54 ④	ECN5068BAZ-W10/G54	AN16TN0AB
	250	800A	ECN5061BA2-W10/G59	ECN5062BA2-W10/G59	ECN5063BA2-W10/G59 ④	ECN5068BA2-W10/G59	
	300	1000A	ECN5061BA3-W10/G64	ECN5062BA3-W10/G64	ECN5063BA3-W10/G64 ④	ECN5068BA3-W10/G64	
	350	1200A	ECN5061BA4-W10/G69	ECN5062BA4-W10/G69	ECN5063BA4-W10/G69 ④	ECN5068BA4-W10/G69	
7YD	400	⑤	ECN5071BAU-W10/G74	ECN5072BAU-W10/G74	ECN5073BAU-W10/G74 ④	ECN5078BAU-W10/G74	AN16UN0AB
	450		ECN5071BAU-W10/G79	ECN5072BAU-W10/G79	ECN5073BAU-W10/G79 ④	ECN5078BAU-W10/G79	
	500		ECN5071BAU-W10/G84	ECN5072BAU-W10/G84	ECN5073BAU-W10/G84 ④	ECN5078BAU-W10/G84	
8YD	600	⑤	ECN5081BAU-W10/G89	ECN5082BAU-W10/G89	ECN5083BAU-W10/G89 ④	ECN5088BAU-W10/G89	AN16VN0AB
	700		ECN5081BAU-W10/G94	ECN5082BAU-W10/G94	ECN5083BAU-W10/G94 ④	ECN5088BAU-W10/G94	
	750		ECN5081BAU-W10/G99	ECN5082BAU-W10/G99	ECN5083BAU-W10/G99 ④	ECN5088BAU-W10/G99	
	800		ECN5081BAU-W10/G103	ECN5082BAU-W10/G103	ECN5083BAU-W10/G103 ④	ECN5088BAU-W10/G103	

Starters do not include heater packs. Select 1 carton of 3 heater packs. Heater Pack Selection, **Page 16-6**.

① All reduced voltage starters are furnished with 120V coils and control transformer connected for 120V secondary. If Modification Code **C35** separate control is specified, the control transformer is omitted.

② All Type 12 enclosures are standardized with external reset. For internal reset, order Modification Code **R5**.

③ Type 12 enclosure is without safety door interlock.

④ Type 4 (Painted Steel) Sizes 6 – 8YD.

⑤ Supply hp, voltage, FLA and whether motor is design E or not when ordering starter.

⑥ The Catalog Numbers listed in the Type 4X column are for Type 4X 304-Grade Stainless Steel, as indicated by the seventh digit **4**. Example: ECN5024EAH. To order Type 4X 316-Grade Stainless Steel, change that digit to **9**. To order Type 4 Painted Steel, change that digit to **3**. To order Nonmetallic, change that digit to **5**. For details on these Alternate Enclosures, see **Tab 14**.

⑦ Also requires matching contactor with mechanical interlock.

Cover Control ..... **Page 6-20**
Other Magnet Coils ..... **Page 6-19**
Dimensions ..... **Page 15-8**
Accessories ..... **Page 16-4**
Modifications ..... **Page 16-40**
Technical Data ..... **Page 18-7**

Table 6-29. Class ECN50 — Combination Open Transition Wye Delta Starter — Circuit Breaker (Continued)

NEMA Size	Max. hp Rating	Circuit Breaker Type	Type 1 General Purpose	Type 3R Rainproof	Type 4X ⑥ Water & Dust-Tight Stainless Steel	Type 12 Dust-Tight Industrial External Reset ②③	Component Starter (Open) ⑦
			Catalog Number	Catalog Number	Catalog Number	Catalog Number	Catalog Number
Motor Volts 460/Magnet Coil Voltage 120 ①							
2YD	20	40A	ECN5021CAE-W10/G6	ECN5022CAE-W10/G6	ECN5024CAE-W10/G6	ECN5028CAE-W10/G6	AN16GN0AB
	25	50A	ECN5021CAF-W10/G11	ECN5022CAF-W10/G11	ECN5024CAF-W10/G11	ECN5028CAF-W10/G11	
	30	60A	ECN5021CAG-W10/G16	ECN5022CAG-W10/G16	ECN5024CAG-W10/G16	ECN5028CAG-W10/G16	
	40	70A	ECN5021CAH-W10/G21	ECN5022CAH-W10/G21	ECN5024CAH-W10/G21	ECN5028CAH-W10/G21	
3YD	50	90A	ECN5031CAJ-W10/G26	ECN5032CAJ-W10/G26	ECN5034CAJ-W10/G26	ECN5038CAJ-W10/G26	AN16KN0AB
	60	100A	ECN5031CAK-W10/G31	ECN5032CAK-W10/G31	ECN5034CAK-W10/G31	ECN5038CAK-W10/G31	
	75	125A	ECN5031CAL-W10/G36	ECN5032CAL-W10/G36	ECN5034CAL-W10/G36	ECN5038CAL-W10/G36	
4YD	100	175A	ECN5041CAN-W10/G41	ECN5042CAN-W10/G41	ECN5044CAN-W10/G41	ECN5048CAN-W10/G41	AN16NN0AB
	125	225A	ECN5041CAQ-W10/G46	ECN5042CAQ-W10/G46	ECN5044CAQ-W10/G46	ECN5048CAQ-W10/G46	
	150	250A	ECN5041CAR-W10/G51	ECN5042CAR-W10/G51	ECN5044CAR-W10/G51	ECN5048CAR-W10/G51	
5YD	200	350A	ECN5051CAV-W10/G56	ECN5052CAV-W10/G56	ECN5054CAV-W10/G56	ECN5058CAV-W10/G56	AN16SN0AB
	250	400A	ECN5051CAW-W10/G61	ECN5052CAW-W10/G61	ECN5054CAW-W10/G61	ECN5058CAW-W10/G61	
	300	500A	ECN5051CAY-W10/G66	ECN5052CAY-W10/G66	ECN5054CAY-W10/G66	ECN5058CAY-W10/G66	
6YD	350	600A	ECN5061CAZ-W10/G71	ECN5062CAZ-W10/G71	ECN5063CAZ-W10/G71 ④	ECN5068CAZ-W10/G71	AN16TN0AB
	400	600A	ECN5061CAZ-W10/G76	ECN5062CAZ-W10/G76	ECN5063CAZ-W10/G76 ④	ECN5068CAZ-W10/G76	
	450	700A	ECN5061CA1-W10/G81	ECN5062CA1-W10/G81	ECN5063CA1-W10/G81 ④	ECN5068CA1-W10/G81	
	500	800A	ECN5061CA2-W10/G86	ECN5062CA2-W10/G86	ECN5063CA2-W10/G86 ④	ECN5068CA2-W10/G86	
	600	1000A	ECN5061CA3-W10/G91	ECN5062CA3-W10/G91	ECN5063CA3-W10/G91 ④	ECN5068CA3-W10/G91	
	700	1200A	ECN5061CA4-W10/G96	ECN5062CA4-W10/G96	ECN5063CA4-W10/G96 ④	ECN5068CA4-W10/G96	
7YD	750	⑤	ECN5071CAU-W10/G101	ECN5072CAU-W10/G101	ECN5073CAU-W10/G101 ④	ECN5078CAU-W10/G101	AN16UN0AB
	800		ECN5071CAU-W10/G105	ECN5072CAU-W10/G105	ECN5073CAU-W10/G105 ④	ECN5078CAU-W10/G105	
	900		ECN5071CAU-W10/G108	ECN5072CAU-W10/G108	ECN5073CAU-W10/G108 ④	ECN5078CAU-W10/G108	
	1000		ECN5071CAU-W10/G111	ECN5072CAU-W10/G111	ECN5073CAU-W10/G111 ④	ECN5078CAU-W10/G111	
8YD	1250	⑤	ECN5081CAU-W10/G114	ECN5082CAU-W10/G114	ECN5083CAU-W10/G114 ④	ECN5088CAU-W10/G114	AN16VN0AB
	1500		ECN5081CAU-W10/G117	ECN5082CAU-W10/G117	ECN5083CAU-W10/G117 ④	ECN5088CAU-W10/G117	
Motor Volts 575/Magnet Coil Voltage 120 ①							
2YD	20	30A	ECN5021DAD-W10/G7	ECN5022DAD-W10/G7	ECN5024DAD-W10/G7	ECN5028DAD-W10/G7	AN16GN0AB
	25	40A	ECN5021DAE-W10/G12	ECN5022DAE-W10/G12	ECN5024DAE-W10/G12	ECN5028DAE-W10/G12	
	30	50A	ECN5021DAF-W10/G17	ECN5022DAF-W10/G17	ECN5024DAF-W10/G17	ECN5028DAF-W10/G17	
	40	60A	ECN5021DAG-W10/G22	ECN5022DAG-W10/G22	ECN5024DAG-W10/G22	ECN5028DAG-W10/G22	
3YD	50	70A	ECN5031DAH-W10/G27	ECN5032DAH-W10/G27	ECN5034DAH-W10/G27	ECN5038DAH-W10/G27	AN16KN0AB
	60	90A	ECN5031DAJ-W10/G32	ECN5032DAJ-W10/G32	ECN5034DAJ-W10/G32	ECN5038DAJ-W10/G32	
	75	100A	ECN5031DAK-W10/G37	ECN5032DAK-W10/G37	ECN5034DAK-W10/G37	ECN5038DAK-W10/G37	
4YD	100	125A	ECN5041DAL-W10/G42	ECN5042DAL-W10/G42	ECN5044DAL-W10/G42	ECN5048DAL-W10/G42	AN16NN0AB
	125	175A	ECN5041DAN-W10/G47	ECN5042DAN-W10/G47	ECN5044DAN-W10/G47	ECN5048DAN-W10/G47	
	150	200A	ECN5041DAP-W10/G52	ECN5042DAP-W10/G52	ECN5044DAP-W10/G52	ECN5048DAP-W10/G52	
5YD	200	250A	ECN5051DAR-W10/G57	ECN5052DAR-W10/G57	ECN5054DAR-W10/G57	ECN5058DAR-W10/G57	AN16SN0AB
	250	350A	ECN5051DAV-W10/G62	ECN5052DAV-W10/G62	ECN5054DAV-W10/G62	ECN5058DAV-W10/G62	
	300	350A	ECN5051DAV-W10/G67	ECN5052DAV-W10/G67	ECN5054DAV-W10/G67	ECN5058DAV-W10/G67	
6YD	350	500A	ECN5061DAY-W10/G72	ECN5062DAY-W10/G72	ECN5063DAY-W10/G72 ④	ECN5068DAY-W10/G72	AN16TN0AB
	400	500A	ECN5061DAY-W10/G77	ECN5062DAY-W10/G77	ECN5063DAY-W10/G77 ④	ECN5068DAY-W10/G77	
	450	600A	ECN5061DAZ-W10/G82	ECN5062DAZ-W10/G82	ECN5063DAZ-W10/G82 ④	ECN5068DAZ-W10/G82	
	500	600A	ECN5061DAZ-W10/G87	ECN5062DAZ-W10/G87	ECN5063DAZ-W10/G87 ④	ECN5068DAZ-W10/G87	
	600	800A	ECN5061DA2-W10/G92	ECN5062DA2-W10/G92	ECN5063DA2-W10/G92 ④	ECN5068DA2-W10/G92	
	700	1000A	ECN5061DA3-W10/G97	ECN5062DA3-W10/G97	ECN5063DA3-W10/G97 ④	ECN5068DA3-W10/G97	
7YD	750	⑤	ECN5071DAU-W10/G102	ECN5072DAU-W10/G102	ECN5073DAU-W10/G102 ④	ECN5078DAU-W10/G102	AN16UN0AB
	800		ECN5071DAU-W10/G106	ECN5072DAU-W10/G106	ECN5073DAU-W10/G106 ④	ECN5078DAU-W10/G106	
	900		ECN5071DAU-W10/G109	ECN5072DAU-W10/G109	ECN5073DAU-W10/G109 ④	ECN5078DAU-W10/G109	
	1000		ECN5071DAU-W10/G112	ECN5072DAU-W10/G112	ECN5073DAU-W10/G112 ④	ECN5078DAU-W10/G112	
8YD	1250	⑤	ECN5081DAU-W10/G115	ECN5082DAU-W10/G115	ECN5083DAU-W10/G115 ④	ECN5088DAU-W10/G115	AN16VN0AB
	1500		ECN5081DAU-W10/G118	ECN5082DAU-W10/G118	ECN5083DAU-W10/G118 ④	ECN5088DAU-W10/G118	

Starters do not include heater packs. Select 1 carton of 3 heater packs. Heater Pack Selection, **Page 16-6**.

① All reduced voltage starters are furnished with 120V coils and control transformer connected for 120V secondary. If Modification Code **C35** separate control is specified, the control transformer is omitted.

② All Type 12 enclosures are standardized with external reset. For internal reset, order Modification Code **R5**.

③ Type 12 enclosure is without safety door interlock.

④ Type 4 (Painted Steel) Sizes 6 – 8YD.

⑤ Supply hp, voltage, FLA and whether motor is design E or not when ordering starter.

⑥ The Catalog Numbers listed in the Type 4X column are for Type 4X 304-Grade Stainless Steel, as indicated by the seventh digit **4**. Example: ECN5024CAE. To order Type 4X 316-Grade Stainless Steel, change that digit to **9**. To order Type 4 Painted Steel, change that digit to **3**. To order Nonmetallic, change that digit to **5**. For details on these Alternate Enclosures, see **Tab 14**.

⑦ Also requires matching contactor with mechanical interlock.

Cover Control ..... **Page 6-20**
Other Magnet Coils ..... **Page 6-19**
Dimensions ..... **Page 15-8**
Accessories ..... **Page 16-4**
Modifications ..... **Page 16-40**
Technical Data ..... **Page 18-7**

Table 6-30. Class ECN51 — Non-combination Closed Transition Wye Delta Starter

NEMA Size	Max. hp Rating	Type 1 General Purpose	Type 3R Rainproof	Type 4X ④ Water & Dust-Tight Stainless Steel	Type 12 Dust-Tight Industrial External Reset ②	Component Starter (Open) ⑤
		Catalog Number	Catalog Number	Catalog Number	Catalog Number	Catalog Number
Motor Volts 200/Magnet Coil Voltage 120 ①						
2YD	15	ECN5121EAA-W10/G1	ECN5122EAA-W10/G1	ECN5124EAA-W10/G1	ECN5128EAA-W10/G1	AN16GN0AB
	20	ECN5121EAA-W10/G3	ECN5122EAA-W10/G3	ECN5124EAA-W10/G3	ECN5128EAA-W10/G3	
3YD	25	ECN5131EAA-W10/G8	ECN5132EAA-W10/G8	ECN5134EAA-W10/G8	ECN5138EAA-W10/G8	AN16KN0AB
	30	ECN5131EAA-W10/G13	ECN5132EAA-W10/G13	ECN5134EAA-W10/G13	ECN5138EAA-W10/G13	
	40	ECN5131EAA-W10/G18	ECN5132EAA-W10/G18	ECN5134EAA-W10/G18	ECN5138EAA-W10/G18	
4YD	50	ECN5141EAA-W10/G23	ECN5142EAA-W10/G23	ECN5144EAA-W10/G23	ECN5148EAA-W10/G23	AN16NN0AB
	60	ECN5141EAA-W10/G28	ECN5142EAA-W10/G28	ECN5144EAA-W10/G28	ECN5148EAA-W10/G28	
5YD	75	ECN5151EAA-W10/G33	ECN5152EAA-W10/G33	ECN5154EAA-W10/G33	ECN5158EAA-W10/G33	AN16SN0AB
	100	ECN5151EAA-W10/G38	ECN5152EAA-W10/G38	ECN5154EAA-W10/G38	ECN5158EAA-W10/G38	
	125	ECN5151EAA-W10/G43	ECN5152EAA-W10/G43	ECN5154EAA-W10/G43	ECN5158EAA-W10/G43	
	150	ECN5151EAA-W10/G48	ECN5152EAA-W10/G48	ECN5154EAA-W10/G48	ECN5158EAA-W10/G48	
6YD	200	ECN5161EAA-W10/G53	ECN5162EAA-W10/G53	ECN5163EAA-W10/G53 ③	ECN5168EAA-W10/G33	AN16TN0AB
	250	ECN5161EAA-W10/G58	ECN5162EAA-W10/G58	ECN5163EAA-W10/G58 ③	ECN5168EAA-W10/G58	
	300	ECN5161EAA-W10/G63	ECN5162EAA-W10/G63	ECN5163EAA-W10/G63 ③	ECN5168EAA-W10/G63	
7YD	350	ECN5171EAA-W10/G68	ECN5172EAA-W10/G68	ECN5173EAA-W10/G68 ③	ECN5178EAA-W10/G68	AN16UN0AB
	400	ECN5171EAA-W10/G73	ECN5172EAA-W10/G73	ECN5173EAA-W10/G73 ③	ECN5178EAA-W10/G73	
	450	ECN5171EAA-W10/G78	ECN5172EAA-W10/G78	ECN5173EAA-W10/G78 ③	ECN5178EAA-W10/G78	
	500	ECN5171EAA-W10/G83	ECN5172EAA-W10/G83	ECN5173EAA-W10/G83 ③	ECN5178EAA-W10/G83	
8YD	600	ECN5181EAA-W10/G88	ECN5182EAA-W10/G88	ECN5183EAA-W10/G88 ③	ECN5188EAA-W10/G88	AN16VN0AB
	700	ECN5181EAA-W10/G93	ECN5182EAA-W10/G93	ECN5183EAA-W10/G93 ③	ECN5188EAA-W10/G93	
	750	ECN5181EAA-W10/G98	ECN5182EAA-W10/G98	ECN5183EAA-W10/G98 ③	ECN5188EAA-W10/G98	
Motor Volts 230/Magnet Coil Voltage 120 ①						
2YD	15	ECN5121BAA-W10/G2	ECN5122BAA-W10/G2	ECN5124BAA-W10/G2	ECN5128BAA-W10/G2	AN16GN0AB
	20	ECN5121BAA-W10/G4	ECN5122BAA-W10/G4	ECN5124BAA-W10/G4	ECN5128BAA-W10/G4	
	25	ECN5121BAA-W10/G9	ECN5122BAA-W10/G9	ECN5124BAA-W10/G9	ECN5128BAA-W10/G9	
3YD	30	ECN5131BAA-W10/G14	ECN5132BAA-W10/G14	ECN5134BAA-W10/G14	ECN5138BAA-W10/G14	AN16KN0AB
	40	ECN5131BAA-W10/G19	ECN5132BAA-W10/G19	ECN5134BAA-W10/G19	ECN5138BAA-W10/G19	
	50	ECN5131BAA-W10/G24	ECN5132BAA-W10/G24	ECN5134BAA-W10/G24	ECN5138BAA-W10/G24	
4YD	60	ECN5141BAA-W10/G29	ECN5142BAA-W10/G29	ECN5144BAA-W10/G29	ECN5148BAA-W10/G29	AN16NN0AB
	75	ECN5141BAA-W10/G34	ECN5142BAA-W10/G34	ECN5144BAA-W10/G34	ECN5148BAA-W10/G34	
5YD	100	ECN5151BAA-W10/G39	ECN5152BAA-W10/G39	ECN5154BAA-W10/G39	ECN5158BAA-W10/G39	AN16SN0AB
	125	ECN5151BAA-W10/G44	ECN5152BAA-W10/G44	ECN5154BAA-W10/G44	ECN5158BAA-W10/G44	
	150	ECN5151BAA-W10/G49	ECN5152BAA-W10/G49	ECN5154BAA-W10/G49	ECN5158BAA-W10/G49	
6YD	200	ECN5161BAA-W10/G54	ECN5162BAA-W10/G54	ECN5163BAA-W10/G54 ③	ECN5168BAA-W10/G54	AN16TN0AB
	250	ECN5161BAA-W10/G59	ECN5162BAA-W10/G59	ECN5163BAA-W10/G59 ③	ECN5168BAA-W10/G59	
	300	ECN5161BAA-W10/G64	ECN5162BAA-W10/G64	ECN5163BAA-W10/G64 ③	ECN5168BAA-W10/G64	
	350	ECN5161BAA-W10/G69	ECN5162BAA-W10/G69	ECN5163BAA-W10/G69 ③	ECN5168BAA-W10/G69	
7YD	400	ECN5171BAA-W10/G74	ECN5172BAA-W10/G74	ECN5173BAA-W10/G74 ③	ECN5178BAA-W10/G74	AN16UN0AB
	450	ECN5171BAA-W10/G79	ECN5172BAA-W10/G79	ECN5173BAA-W10/G79 ③	ECN5178BAA-W10/G79	
	500	ECN5171BAA-W10/G84	ECN5172BAA-W10/G84	ECN5173BAA-W10/G84 ③	ECN5178BAA-W10/G84	
8YD	600	ECN5181BAA-W10/G89	ECN5182BAA-W10/G89	ECN5183BAA-W10/G89 ③	ECN5188BAA-W10/G89	AN16VN0AB
	700	ECN5181BAA-W10/G94	ECN5182BAA-W10/G94	ECN5183BAA-W10/G94 ③	ECN5188BAA-W10/G94	
	750	ECN5181BAA-W10/G99	ECN5182BAA-W10/G99	ECN5183BAA-W10/G99 ③	ECN5188BAA-W10/G99	
	800	ECN5181BAA-W10/G103	ECN5182BAA-W10/G103	ECN5183BAA-W10/G103 ③	ECN5188BAA-W10/G103	

Starters do not include heater packs. Select 1 carton of 3 heater packs. Heater Pack Selection, **Page 16-6**.

① All reduced voltage starters are furnished with 120V coils and control transformer connected for 120V secondary. If Modification Code **C35** separate control is specified, the control transformer is omitted.

② All Type 12 enclosures are standardized with external reset. For internal reset, order Modification Code **R5**.

③ Type 4 (Painted Steel) Sizes 6 – 8YD.

④ The Catalog Numbers listed in the Type 4X column are for Type 4X 304-Grade Stainless Steel, as indicated by the seventh digit **4**. Example: ECN5124EAA. To order Type 4X 316-Grade Stainless Steel, change that digit to **9**. To order Type 4 Painted Steel, change that digit to **3**. To order Nonmetallic, change that digit to **5**. For details on these Alternate Enclosures, see **Tab 14**.

⑤ Also requires 2 matching contactors and mechanical interlock.

Cover Control ..... **Page 6-20**
Other Magnet Coils ..... **Page 6-19**
Dimensions ..... **Page 15-8**
Accessories ..... **Page 16-4**
Modifications ..... **Page 16-40**
Technical Data ..... **Page 18-7**

Table 6-30. Class ECN51 — Non-combination Closed Transition Wye Delta Starter (Continued)

NEMA Size	Max. hp Rating	Type 1 General Purpose	Type 3R Rainproof	Type 4X ④ Water & Dust-Tight Stainless Steel	Type 12 Dust-Tight Industrial External Reset ②	Component Starter (Open) ⑤
		Catalog Number	Catalog Number	Catalog Number	Catalog Number	Catalog Number
Motor Volts 460/Magnet Coil Voltage 120 ①						
2YD	20	ECN5121CAA-W10/G6	ECN5122CAA-W10/G6	ECN5124CAA-W10/G6	ECN5128CAA-W10/G6	AN16GN0AB
	25	ECN5121CAA-W10/G11	ECN5122CAA-W10/G11	ECN5124CAA-W10/G11	ECN5128CAA-W10/G11	
	30	ECN5121CAA-W10/G16	ECN5122CAA-W10/G16	ECN5124CAA-W10/G16	ECN5128CAA-W10/G16	
	40	ECN5121CAA-W10/G21	ECN5122CAA-W10/G21	ECN5124CAA-W10/G21	ECN5128CAA-W10/G21	
3YD	50	ECN5131CAA-W10/G26	ECN5132CAA-W10/G26	ECN5134CAA-W10/G26	ECN5138CAA-W10/G26	AN16KN0AB
	60	ECN5131CAA-W10/G31	ECN5132CAA-W10/G31	ECN5134CAA-W10/G31	ECN5138CAA-W10/G31	
	75	ECN5131CAA-W10/G36	ECN5132CAA-W10/G36	ECN5134CAA-W10/G36	ECN5138CAA-W10/G36	
4YD	100	ECN5141CAA-W10/G41	ECN5142CAA-W10/G41	ECN5144CAA-W10/G41	ECN5148CAA-W10/G41	AN16NN0AB
	125	ECN5141CAA-W10/G46	ECN5142CAA-W10/G46	ECN5144CAA-W10/G46	ECN5148CAA-W10/G46	
	150	ECN5141CAA-W10/G51	ECN5142CAA-W10/G51	ECN5144CAA-W10/G51	ECN5148CAA-W10/G51	
5YD	200	ECN5151CAA-W10/G56	ECN5152CAA-W10/G56	ECN5154CAA-W10/G56	ECN5158CAA-W10/G56	AN16SN0AB
	250	ECN5151CAA-W10/G61	ECN5152CAA-W10/G61	ECN5154CAA-W10/G61	ECN5158CAA-W10/G61	
	300	ECN5151CAA-W10/G66	ECN5152CAA-W10/G66	ECN5154CAA-W10/G66	ECN5158CAA-W10/G66	
6YD	350	ECN5161CAA-W10/G71	ECN5162CAA-W10/G71	ECN5163CAA-W10/G71 ③	ECN5168CAA-W10/G71	AN16TN0AB
	400	ECN5161CAA-W10/G76	ECN5162CAA-W10/G76	ECN5163CAA-W10/G76 ③	ECN5168CAA-W10/G76	
	450	ECN5161CAA-W10/G81	ECN5162CAA-W10/G81	ECN5163CAA-W10/G81 ③	ECN5168CAA-W10/G81	
	500	ECN5161CAA-W10/G86	ECN5162CAA-W10/G86	ECN5163CAA-W10/G86 ③	ECN5168CAA-W10/G86	
	600	ECN5161CAA-W10/G91	ECN5162CAA-W10/G91	ECN5163CAA-W10/G91 ③	ECN5168CAA-W10/G91	
	700	ECN5161CAA-W10/G96	ECN5162CAA-W10/G96	ECN5163CAA-W10/G96 ③	ECN5168CAA-W10/G96	
7YD	750	ECN5171CAA-W10/G101	ECN5172CAA-W10/G101	ECN5173CAA-W10/G101 ③	ECN5178CAA-W10/G101	AN16UN0AB
	800	ECN5171CAA-W10/G105	ECN5172CAA-W10/G105	ECN5173CAA-W10/G105 ③	ECN5178CAA-W10/G105	
	900	ECN5171CAA-W10/G108	ECN5172CAA-W10/G108	ECN5173CAA-W10/G108 ③	ECN5178CAA-W10/G108	
	1000	ECN5171CAA-W10/G111	ECN5172CAA-W10/G111	ECN5173CAA-W10/G111 ③	ECN5178CAA-W10/G111	
8YD	1250	ECN5181CAA-W10/G114	ECN5182CAA-W10/G114	ECN5183CAA-W10/G114 ③	ECN5188CAA-W10/G114	AN16VN0AB
	1500	ECN5181CAA-W10/G117	ECN5182CAA-W10/G117	ECN5183CAA-W10/G117 ③	ECN5188CAA-W10/G117	
Motor Volts 575/Magnet Coil Voltage 120 ①						
2YD	20	ECN5121DAA-W10/G7	ECN5122DAA-W10/G7	ECN5124DAA-W10/G7	ECN5128DAA-W10/G7	AN16GN0AB
	25	ECN5121DAA-W10/G12	ECN5122DAA-W10/G12	ECN5124DAA-W10/G12	ECN5128DAA-W10/G12	
	30	ECN5121DAA-W10/G17	ECN5122DAA-W10/G17	ECN5124DAA-W10/G17	ECN5128DAA-W10/G17	
	40	ECN5121DAA-W10/G22	ECN5122DAA-W10/G22	ECN5124DAA-W10/G22	ECN5128DAA-W10/G22	
3YD	50	ECN5131DAA-W10/G27	ECN5132DAA-W10/G27	ECN5134DAA-W10/G27	ECN5138DAA-W10/G27	AN16KN0AB
	60	ECN5131DAA-W10/G32	ECN5132DAA-W10/G32	ECN5134DAA-W10/G32	ECN5138DAA-W10/G32	
	75	ECN5131DAA-W10/G37	ECN5132DAA-W10/G37	ECN5134DAA-W10/G37	ECN5138DAA-W10/G37	
4YD	100	ECN5141DAA-W10/G42	ECN5142DAA-W10/G42	ECN5144DAA-W10/G42	ECN5148DAA-W10/G42	AN16NN0AB
	125	ECN5141DAA-W10/G47	ECN5142DAA-W10/G47	ECN5144DAA-W10/G47	ECN5148DAA-W10/G47	
	150	ECN5141DAA-W10/G52	ECN5142DAA-W10/G52	ECN5144DAA-W10/G52	ECN5148DAA-W10/G52	
5YD	200	ECN5151DAA-W10/G57	ECN5152DAA-W10/G57	ECN5154DAA-W10/G57	ECN5158DAA-W10/G57	AN16SN0AB
	250	ECN5151DAA-W10/G62	ECN5152DAA-W10/G62	ECN5154DAA-W10/G62	ECN5158DAA-W10/G62	
	300	ECN5151DAA-W10/G67	ECN5152DAA-W10/G67	ECN5154DAA-W10/G67	ECN5158DAA-W10/G67	
6YD	350	ECN5161DAA-W10/G72	ECN5162DAA-W10/G72	ECN5163DAA-W10/G72 ③	ECN5168DAA-W10/G72	AN16TN0AB
	400	ECN5161DAA-W10/G77	ECN5162DAA-W10/G77	ECN5163DAA-W10/G77 ③	ECN5168DAA-W10/G77	
	450	ECN5161DAA-W10/G82	ECN5162DAA-W10/G82	ECN5163DAA-W10/G82 ③	ECN5168DAA-W10/G82	
	500	ECN5161DAA-W10/G87	ECN5162DAA-W10/G87	ECN5163DAA-W10/G87 ③	ECN5168DAA-W10/G87	
	600	ECN5161DAA-W10/G92	ECN5162DAA-W10/G92	ECN5163DAA-W10/G92 ③	ECN5168DAA-W10/G92	
	700	ECN5161DAA-W10/G97	ECN5162DAA-W10/G97	ECN5163DAA-W10/G97 ③	ECN5168DAA-W10/G97	
7YD	750	ECN5171DAA-W10/G102	ECN5172DAA-W10/G102	ECN5173DAA-W10/G102 ③	ECN5178DAA-W10/G102	AN16UN0AB
	800	ECN5171DAA-W10/G106	ECN5172DAA-W10/G106	ECN5173DAA-W10/G106 ③	ECN5178DAA-W10/G106	
	900	ECN5171DAA-W10/G109	ECN5172DAA-W10/G109	ECN5173DAA-W10/G109 ③	ECN5178DAA-W10/G109	
	1000	ECN5171DAA-W10/G112	ECN5172DAA-W10/G112	ECN5173DAA-W10/G112 ③	ECN5178DAA-W10/G112	
8YD	1250	ECN5181DAA-W10/G115	ECN5182DAA-W10/G115	ECN5183DAA-W10/G115 ③	ECN5188DAA-W10/G115	AN16VN0AB
	1500	ECN5181DAA-W10/G118	ECN5182DAA-W10/G118	ECN5183DAA-W10/G118 ③	ECN5188DAA-W10/G118	

Starters do not include heater packs. Select 1 carton of 3 heater packs. Heater Pack Selection, **Page 16-6**.

① All reduced voltage starters are furnished with 120V coils and control transformer connected for 120V secondary. If Modification Code **C35** separate control is specified, the control transformer is omitted.

② All Type 12 enclosures are standardized with external reset. For internal reset, order Modification Code **R5**.

③ Type 4 (Painted Steel) Sizes 6 – 8YD.

④ The Catalog Numbers listed in the Type 4X column are for Type 4X 304-Grade Stainless Steel, as indicated by the seventh digit **4**. Example: ECN5124CAA. To order Type 4X 316-Grade Stainless Steel, change that digit to **9**. To order Type 4 Painted Steel, change that digit to **3**. To order Nonmetallic, change that digit to **5**. For details on these Alternate Enclosures, see **Tab 14**.

⑤ Also requires 2 matching contactors and mechanical interlock.

Cover Control ..... **Page 6-20**
Other Magnet Coils ..... **Page 6-19**
Dimensions ..... **Page 15-8**
Accessories ..... **Page 16-4**
Modifications ..... **Page 16-40**
Technical Data ..... **Page 18-7**

Table 6-31. Class ECN52 — Combination Closed Transition Wye Delta Starter — Fusible Disconnect

NEMA Size	Max. hp Rating	Fuse Clip Amps.	Type 1 General Purpose	Type 3R Rainproof	Type 4X ⑥ Water & Dust-Tight Stainless Steel	Type 12 Dust-Tight Industrial External Reset ②③	Component Starter (Open) ⑦
			Catalog Number	Catalog Number	Catalog Number	Catalog Number	Catalog Number
Motor Volts 200/Magnet Coil Voltage 120 ①							
2YD	15	60A	ECN5221EAD-W10/G1	ECN5222EAD-W10/G1	ECN5224EAD-W10/G1	ECN5228EAD-W10/G1	AN16GN0AB
	20	100A	ECN5221EAF-W10/G3	ECN5222EAF-W10/G3	ECN5224EAF-W10/G3	ECN5228EAF-W10/G3	
3YD	25	100A	ECN5231EAF-W10/G8	ECN5232EAF-W10/G8	ECN5234EAF-W10/G8	ECN5238EAF-W10/G8	AN16KN0AB
	30	200A	ECN5231EAH-W10/G13	ECN5232EAH-W10/G13	ECN5234EAH-W10/G13	ECN5238EAH-W10/G13	
	40	200A	ECN5231EAH-W10/G18	ECN5232EAH-W10/G18	ECN5234EAH-W10/G18	ECN5238EAH-W10/G18	
4YD	50	200A	ECN5241EAH-W10/G23	ECN5242EAH-W10/G23	ECN5244EAH-W10/G23	ECN5248EAH-W10/G23	AN16NN0AB
	60	400A	ECN5241EAK-W10/G28	ECN5242EAK-W10/G28	ECN5244EAK-W10/G28	ECN5248EAK-W10/G28	
5YD	75	400A	ECN5251EAK-W10/G33	ECN5252EAK-W10/G33	ECN5254EAK-W10/G33	ECN5258EAK-W10/G33	AN16SN0AB
	100	400A	ECN5251EAK-W10/G38	ECN5252EAK-W10/G38	ECN5254EAK-W10/G38	ECN5258EAK-W10/G38	
	125	600A	ECN5251EAM-W10/G43	ECN5252EAM-W10/G43	ECN5254EAM-W10/G43	ECN5258EAM-W10/G43	
	150	600A	ECN5251EAM-W10/G48	ECN5252EAM-W10/G48	ECN5254EAM-W10/G48	ECN5258EAM-W10/G48	
6YD	200	⑤	ECN5261EAU-W10/G53	ECN5262EAU-W10/G53	ECN5263EAU-W10/G53 ④	ECN5268EAU-W10/G33	AN16TN0AB
	250		ECN5261EAU-W10/G58	ECN5262EAU-W10/G58	ECN5263EAU-W10/G58 ④	ECN5268EAU-W10/G58	
	300		ECN5261EAU-W10/G63	ECN5262EAU-W10/G63	ECN5263EAU-W10/G63 ④	ECN5268EAU-W10/G63	
7YD	350	⑤	ECN5271EAU-W10/G68	ECN5272EAU-W10/G68	ECN5273EAU-W10/G68 ④	ECN5278EAU-W10/G68	AN16UN0AB
	400		ECN5271EAU-W10/G73	ECN5272EAU-W10/G73	ECN5273EAU-W10/G73 ④	ECN5278EAU-W10/G73	
	450		ECN5271EAU-W10/G78	ECN5272EAU-W10/G78	ECN5273EAU-W10/G78 ④	ECN5278EAU-W10/G78	
	500		ECN5271EAU-W10/G83	ECN5272EAU-W10/G83	ECN5273EAU-W10/G83 ④	ECN5278EAU-W10/G83	
8YD	600	⑤	ECN5281EAU-W10/G88	ECN5282EAU-W10/G88	ECN5283EAU-W10/G88 ④	ECN5288EAU-W10/G88	AN16VN0AB
	700		ECN5281EAU-W10/G93	ECN5282EAU-W10/G93	ECN5283EAU-W10/G93 ④	ECN5288EAU-W10/G93	
	750		ECN5281EAU-W10/G98	ECN5282EAU-W10/G98	ECN5283EAU-W10/G98 ④	ECN5288EAU-W10/G98	
Motor Volts 230/Magnet Coil Voltage 120 ①							
2YD	15	60A	ECN5221BAD-W10/G2	ECN5222BAD-W10/G2	ECN5224BAD-W10/G2	ECN5228BAD-W10/G2	AN16GN0AB
	20	100A	ECN5221BAF-W10/G4	ECN5222BAF-W10/G4	ECN5224BAF-W10/G4	ECN5228BAF-W10/G4	
	25	100A	ECN5221BAF-W10/G9	ECN5222BAF-W10/G9	ECN5224BAF-W10/G9	ECN5228BAF-W10/G9	
3YD	30	100A	ECN5231BAF-W10/G14	ECN5232BAF-W10/G14	ECN5234BAF-W10/G14	ECN5238BAF-W10/G14	AN16KN0AB
	40	200A	ECN5231BAH-W10/G19	ECN5232BAH-W10/G19	ECN5234BAH-W10/G19	ECN5238BAH-W10/G19	
	50	200A	ECN5231BAH-W10/G24	ECN5232BAH-W10/G24	ECN5234BAH-W10/G24	ECN5238BAH-W10/G24	
4YD	60	200A	ECN5241BAH-W10/G29	ECN5242BAH-W10/G29	ECN5244BAH-W10/G29	ECN5248BAH-W10/G29	AN16NN0AB
	75	400A	ECN5241BAK-W10/G34	ECN5242BAK-W10/G34	ECN5244BAK-W10/G34	ECN5248BAK-W10/G34	
5YD	100	400A	ECN5251BAK-W10/G39	ECN5252BAK-W10/G39	ECN5254BAK-W10/G39	ECN5258BAK-W10/G39	AN16SN0AB
	125	400A	ECN5251BAK-W10/G44	ECN5252BAK-W10/G44	ECN5254BAK-W10/G44	ECN5258BAK-W10/G44	
	150	600A	ECN5251BAM-W10/G49	ECN5252BAM-W10/G49	ECN5254BAM-W10/G49	ECN5258BAM-W10/G49	
6YD	200	600A	ECN5261BAM-W10/G54	ECN5262BAM-W10/G54	ECN5263BAM-W10/G54 ④	ECN5268BAM-W10/G54	AN16TN0AB
	250	⑤	ECN5261BAU-W10/G59	ECN5262BAU-W10/G59	ECN5263BAU-W10/G59 ④	ECN5268BAU-W10/G59	
	300		ECN5261BAU-W10/G64	ECN5262BAU-W10/G64	ECN5263BAU-W10/G64 ④	ECN5268BAU-W10/G64	
	350		ECN5261BAU-W10/G69	ECN5262BAU-W10/G69	ECN5263BAU-W10/G69 ④	ECN5268BAU-W10/G69	
7YD	400	⑤	ECN5271BAU-W10/G74	ECN5272BAU-W10/G74	ECN5273BAU-W10/G74 ④	ECN5278BAU-W10/G74	AN16UN0AB
	450		ECN5271BAU-W10/G79	ECN5272BAU-W10/G79	ECN5273BAU-W10/G79 ④	ECN5278BAU-W10/G79	
	500		ECN5271BAU-W10/G84	ECN5272BAU-W10/G84	ECN5273BAU-W10/G84 ④	ECN5278BAU-W10/G84	
8YD	600	⑤	ECN5281BAU-W10/G89	ECN5282BAU-W10/G89	ECN5283BAU-W10/G89 ④	ECN5288BAU-W10/G89	AN16VN0AB
	700		ECN5281BAU-W10/G94	ECN5282BAU-W10/G94	ECN5283BAU-W10/G94 ④	ECN5288BAU-W10/G94	
	750		ECN5281BAU-W10/G99	ECN5282BAU-W10/G99	ECN5283BAU-W10/G99 ④	ECN5288BAU-W10/G99	
	800		ECN5281BAU-W10/G103	ECN5282BAU-W10/G103	ECN5283BAU-W10/G103 ④	ECN5288BAU-W10/G103	

Starters do not include heater packs. Select 1 carton of 3 heater packs. Heater Pack Selection, **Page 16-6**.

① All reduced voltage starters are furnished with 120V coils and control transformer connected for 120V secondary. If Modification Code **C35** separate control is specified, the control transformer is omitted.
② All Type 12 enclosures are standardized with external reset. For internal reset, order Modification Code **R5**.
③ Type 12 enclosure is without safety door interlock.
④ Type 4 (Painted Steel) Sizes 6 – 8YD.
⑤ Supply hp, voltage, FLA and whether motor is design E or not when ordering starter.
⑥ The Catalog Numbers listed in the Type 4X column are for Type 4X 304-Grade Stainless Steel, as indicated by the seventh digit **4**. Example: ECN5224EAD. To order Type 4X 316-Grade Stainless Steel, change that digit to **9**. To order Type 4 Painted Steel, change that digit to **3**. To order Nonmetallic, change that digit to **5**. For details on these Alternate Enclosures, see **Tab 14**.
⑦ Also requires 2 matching contactors and mechanical interlock.

Cover Control ..... **Page 6-20**
Other Magnet Coils ..... **Page 6-19**
Dimensions ..... **Page 15-8**
Accessories ..... **Page 16-4**
Modifications ..... **Page 16-40**
Technical Data ..... **Page 18-7**

Table 6-31. Class ECN52 — Combination Closed Transition Wye Delta Starter — Fusible Disconnect (Continued)

NEMA Size	Max. hp Rating	Fuse Clip Amps.	Type 1 General Purpose	Type 3R Rainproof	Type 4X ⑥ Water & Dust-Tight Stainless Steel	Type 12 Dust-Tight Industrial External Reset ②③	Component Starter (Open) ⑦
			Catalog Number	Catalog Number	Catalog Number	Catalog Number	Catalog Number
Motor Volts 460/Magnet Coil Voltage 120 ①							
2YD	20	60A	ECN5221CAE-W10/G6	ECN5222CAE-W10/G6	ECN5224CAE-W10/G6	ECN5228CAE-W10/G6	AN16GN0AB
	25	60A	ECN5221CAE-W10/G11	ECN5222CAE-W10/G11	ECN5224CAE-W10/G11	ECN5228CAE-W10/G11	
	30	60A	ECN5221CAE-W10/G16	ECN5222CAE-W10/G16	ECN5224CAE-W10/G16	ECN5228CAE-W10/G16	
	40	60A	ECN5221CAE-W10/G21	ECN5222CAE-W10/G21	ECN5224CAE-W10/G21	ECN5228CAE-W10/G21	
3YD	50	100A	ECN5231CAG-W10/G26	ECN5232CAG-W10/G26	ECN5234CAG-W10/G26	ECN5238CAG-W10/G26	AN16KN0AB
	60	100A	ECN5231CAG-W10/G31	ECN5232CAG-W10/G31	ECN5234CAG-W10/G31	ECN5238CAG-W10/G31	
	75	200A	ECN5231CAJ-W10/G36	ECN5232CAJ-W10/G36	ECN5234CAJ-W10/G36	ECN5238CAJ-W10/G36	
4YD	100	200A	ECN5241CAJ-W10/G41	ECN5242CAJ-W10/G41	ECN5244CAJ-W10/G41	ECN5248CAJ-W10/G41	AN16NN0AB
	125	200A	ECN5241CAJ-W10/G46	ECN5242CAJ-W10/G46	ECN5244CAJ-W10/G46	ECN5248CAJ-W10/G46	
	150	400A	ECN5241CAL-W10/G51	ECN5242CAL-W10/G51	ECN5244CAL-W10/G51	ECN5248CAL-W10/G51	
5YD	200	400A	ECN5251CAL-W10/G56	ECN5252CAL-W10/G56	ECN5254CAL-W10/G56	ECN5258CAL-W10/G56	AN16SN0AB
	250	400A	ECN5251CAL-W10/G61	ECN5252CAL-W10/G61	ECN5254CAL-W10/G61	ECN5258CAL-W10/G61	
	300	600A	ECN5251CAN-W10/G66	ECN5252CAN-W10/G66	ECN5254CAN-W10/G66	ECN5258CAN-W10/G66	
6YD	350	600A	ECN5261CAN-W10/G71	ECN5262CAN-W10/G71	ECN5263CAN-W10/G71 ④	ECN5268CAN-W10/G71	AN16TN0AB
	400	600A	ECN5261CAN-W10/G76	ECN5262CAN-W10/G76	ECN5263CAN-W10/G76 ④	ECN5268CAN-W10/G76	
	450	600A	ECN5261CAN-W10/G81	ECN5262CAN-W10/G81	ECN5263CAN-W10/G81 ④	ECN5268CAN-W10/G81	
	500	800A	ECN5261CAP-W10/G86	ECN5262CAP-W10/G86	ECN5263CAP-W10/G86 ④	ECN5268CAP-W10/G86	
	600	1200A	ECN5261CAQ-W10/G91	ECN5262CAQ-W10/G91	ECN5263CAQ-W10/G91 ④	ECN5268CAQ-W10/G91	
	700	1200A	ECN5261CAQ-W10/G96	ECN5262CAQ-W10/G96	ECN5263CAQ-W10/G96 ④	ECN5268CAQ-W10/G96	
7YD	750	1200A	ECN5271CAQ-W10/G101	ECN5272CAQ-W10/G101	ECN5273CAQ-W10/G101 ④	ECN5278CAQ-W10/G101	AN16UN0AB
	800	⑤	ECN5271CAU-W10/G105	ECN5272CAU-W10/G105	ECN5273CAU-W10/G105 ④	ECN5278CAU-W10/G105	
	900		ECN5271CAU-W10/G108	ECN5272CAU-W10/G108	ECN5273CAU-W10/G108 ④	ECN5278CAU-W10/G108	
	1000		ECN5271CAU-W10/G111	ECN5272CAU-W10/G111	ECN5273CAU-W10/G111 ④	ECN5278CAU-W10/G111	
8YD	1250	⑤	ECN5281CAU-W10/G114	ECN5282CAU-W10/G114	ECN5283CAU-W10/G114 ④	ECN5288CAU-W10/G114	AN16VN0AB
	1500		ECN5281CAU-W10/G117	ECN5282CAU-W10/G117	ECN5283CAU-W10/G117 ④	ECN5288CAU-W10/G117	
Motor Volts 575/Magnet Coil Voltage 120 ①							
2YD	20	30A	ECN5221DAC-W10/G7	ECN5222DAC-W10/G7	ECN5224DAC-W10/G7	ECN5228DAC-W10/G7	AN16GN0AB
	25	60A	ECN5221DAE-W10/G12	ECN5222DAE-W10/G12	ECN5224DAE-W10/G12	ECN5228DAE-W10/G12	
	30	60A	ECN5221DAE-W10/G17	ECN5222DAE-W10/G17	ECN5224DAE-W10/G17	ECN5228DAE-W10/G17	
	40	60A	ECN5221DAE-W10/G22	ECN5222DAE-W10/G22	ECN5224DAE-W10/G22	ECN5228DAE-W10/G22	
3YD	50	100A	ECN5231DAG-W10/G27	ECN5232DAG-W10/G27	ECN5234DAG-W10/G27	ECN5238DAG-W10/G27	AN16KN0AB
	60	100A	ECN5231DAG-W10/G32	ECN5232DAG-W10/G32	ECN5234DAG-W10/G32	ECN5238DAG-W10/G32	
	75	100A	ECN5231DAG-W10/G37	ECN5232DAG-W10/G37	ECN5234DAG-W10/G37	ECN5238DAG-W10/G37	
4YD	100	200A	ECN5241DAJ-W10/G42	ECN5242DAJ-W10/G42	ECN5244DAJ-W10/G42	ECN5248DAJ-W10/G42	AN16NN0AB
	125	200A	ECN5241DAJ-W10/G47	ECN5242DAJ-W10/G47	ECN5244DAJ-W10/G47	ECN5248DAJ-W10/G47	
	150	200A	ECN5241DAJ-W10/G52	ECN5242DAJ-W10/G52	ECN5244DAJ-W10/G52	ECN5248DAJ-W10/G52	
5YD	200	400A	ECN5251DAL-W10/G57	ECN5252DAL-W10/G57	ECN5254DAL-W10/G57	ECN5258DAL-W10/G57	AN16SN0AB
	250	400A	ECN5251DAL-W10/G62	ECN5252DAL-W10/G62	ECN5254DAL-W10/G62	ECN5258DAL-W10/G62	
	300	400A	ECN5251DAL-W10/G67	ECN5252DAL-W10/G67	ECN5254DAL-W10/G67	ECN5258DAL-W10/G67	
6YD	350	400A	ECN5261DAL-W10/G72	ECN5262DAL-W10/G72	ECN5263DAL-W10/G72 ④	ECN5268DAL-W10/G72	AN16TN0AB
	400	600A	ECN5261DAN-W10/G77	ECN5262DAN-W10/G77	ECN5263DAN-W10/G77 ④	ECN5268DAN-W10/G77	
	450	600A	ECN5261DAN-W10/G82	ECN5262DAN-W10/G82	ECN5263DAN-W10/G82 ④	ECN5268DAN-W10/G82	
	500	600A	ECN5261DAN-W10/G87	ECN5262DAN-W10/G87	ECN5263DAN-W10/G87 ④	ECN5268DAN-W10/G87	
	600	800A	ECN5261DAP-W10/G92	ECN5262DAP-W10/G92	ECN5263DAP-W10/G92 ④	ECN5268DAP-W10/G92	
	700	800A	ECN5261DAP-W10/G97	ECN5262DAP-W10/G97	ECN5263DAP-W10/G97 ④	ECN5268DAP-W10/G97	
7YD	750	⑤	ECN5271DAU-W10/G102	ECN5272DAU-W10/G102	ECN5273DAU-W10/G102 ④	ECN5278DAU-W10/G102	AN16UN0AB
	800		ECN5271DAU-W10/G106	ECN5272DAU-W10/G106	ECN5273DAU-W10/G106 ④	ECN5278DAU-W10/G106	
	900		ECN5271DAU-W10/G109	ECN5272DAU-W10/G109	ECN5273DAU-W10/G109 ④	ECN5278DAU-W10/G109	
	1000		ECN5271DAU-W10/G112	ECN5272DAU-W10/G112	ECN5273DAU-W10/G112 ④	ECN5278DAU-W10/G112	
8YD	1250	⑤	ECN5281DAU-W10/G115	ECN5282DAU-W10/G115	ECN5283DAU-W10/G115 ④	ECN5288DAU-W10/G115	AN16VN0AB
	1500		ECN5281DAU-W10/G118	ECN5282DAU-W10/G118	ECN5283DAU-W10/G118 ④	ECN5288DAU-W10/G118	

Starters do not include heater packs. Select 1 carton of 3 heater packs. Heater Pack Selection, **Page 16-6**.

① All reduced voltage starters are furnished with 120V coils and control transformer connected for 120V secondary. If Modification Code **C35** separate control is specified, the control transformer is omitted.
② All Type 12 enclosures are standardized with external reset. For internal reset, order Modification Code **R5**.
③ Type 12 enclosure is without safety door interlock.
④ Type 4 (Painted Steel) Sizes 6 – 8YD.
⑤ Supply hp, voltage, FLA and whether motor is design E or not when ordering starter.
⑥ The Catalog Numbers listed in the Type 4X column are for Type 4X 304-Grade Stainless Steel, as indicated by the seventh digit **4**. Example: ECN5224CAE. To order Type 4X 316-Grade Stainless Steel, change that digit to **9**. To order Type 4 Painted Steel, change that digit to **3**. To order Nonmetallic, change that digit to **5**. For details on these Alternate Enclosures, see **Tab 14**.
⑦ Also requires 2 matching contactors and mechanical interlock.

Cover Control ..... **Page 6-20**
Other Magnet Coils ..... **Page 6-19**
Dimensions ..... **Page 15-8**
Accessories ..... **Page 16-4**
Modifications ..... **Page 16-40**
Technical Data ..... **Page 18-7**

Table 6-32. Class ECN52 — Combination Closed Transition Wye Delta Starter — Non-fusible Disconnect

NEMA Size	Max. hp Rating	Dis-connect Amps.	Type 1 General Purpose	Type 3R Rainproof	Type 4X ⑥ Water & Dust-Tight Stainless Steel	Type 12 Dust-Tight Industrial External Reset ②③	Component Starter (Open) ⑦
			Catalog Number	Catalog Number	Catalog Number	Catalog Number	Catalog Number
Motor Volts 200/Magnet Coil Voltage 120 ①							
2YD	15	60A	ECN5221EAA-W10/G1	ECN5222EAA-W10/G1	ECN5224EAA-W10/G1	ECN5228EAA-W10/G1	AN16GN0AB
	20	100A	ECN5221EAA-W10/G3	ECN5222EAA-W10/G3	ECN5224EAA-W10/G3	ECN5228EAA-W10/G3	
3YD	25	100A	ECN5231EAA-W10/G8	ECN5232EAA-W10/G8	ECN5234EAA-W10/G8	ECN5238EAA-W10/G8	AN16KN0AB
	30	200A	ECN5231EAA-W10/G13	ECN5232EAA-W10/G13	ECN5234EAA-W10/G13	ECN5238EAA-W10/G13	
	40	200A	ECN5231EAA-W10/G18	ECN5232EAA-W10/G18	ECN5234EAA-W10/G18	ECN5238EAA-W10/G18	
4YD	50	200A	ECN5241EAA-W10/G23	ECN5242EAA-W10/G23	ECN5244EAA-W10/G23	ECN5248EAA-W10/G23	AN16NN0AB
	60	400A	ECN5241EAA-W10/G28	ECN5242EAA-W10/G28	ECN5244EAA-W10/G28	ECN5248EAA-W10/G28	
5YD	75	400A	ECN5251EAA-W10/G33	ECN5252EAA-W10/G33	ECN5254EAA-W10/G33	ECN5258EAA-W10/G33	AN16SN0AB
	100	400A	ECN5251EAA-W10/G38	ECN5252EAA-W10/G38	ECN5254EAA-W10/G38	ECN5258EAA-W10/G38	
	125	600A	ECN5251EAA-W10/G43	ECN5252EAA-W10/G43	ECN5254EAA-W10/G43	ECN5258EAA-W10/G43	
	150	600A	ECN5251EAA-W10/G48	ECN5252EAA-W10/G48	ECN5254EAA-W10/G48	ECN5258EAA-W10/G48	
6YD	200	⑤	ECN5261EAA-W10/G53	ECN5262EAA-W10/G53	ECN5263EAA-W10/G53 ④	ECN5268EAA-W10/G33	AN16TN0AB
	250		ECN5261EAA-W10/G58	ECN5262EAA-W10/G58	ECN5263EAA-W10/G58 ④	ECN5268EAA-W10/G58	
	300		ECN5261EAA-W10/G63	ECN5262EAA-W10/G63	ECN5263EAA-W10/G63 ④	ECN5268EAA-W10/G63	
7YD	350	⑤	ECN5271EAA-W10/G68	ECN5272EAA-W10/G68	ECN5273EAA-W10/G68 ④	ECN5278EAA-W10/G68	AN16UN0AB
	400		ECN5271EAA-W10/G73	ECN5272EAA-W10/G73	ECN5273EAA-W10/G73 ④	ECN5278EAA-W10/G73	
	450		ECN5271EAA-W10/G78	ECN5272EAA-W10/G78	ECN5273EAA-W10/G78 ④	ECN5278EAA-W10/G78	
	500		ECN5271EAA-W10/G83	ECN5272EAA-W10/G83	ECN5273EAA-W10/G83 ④	ECN5278EAA-W10/G83	
8YD	600	⑤	ECN5281EAA-W10/G88	ECN5282EAA-W10/G88	ECN5283EAA-W10/G88 ④	ECN5288EAA-W10/G88	AN16VN0AB
	700		ECN5281EAA-W10/G93	ECN5282EAA-W10/G93	ECN5283EAA-W10/G93 ④	ECN5288EAA-W10/G93	
	750		ECN5281EAA-W10/G98	ECN5282EAA-W10/G98	ECN5283EAA-W10/G98 ④	ECN5288EAA-W10/G98	
Motor Volts 230/Magnet Coil Voltage 120 ①							
2YD	15	60A	ECN5221BAA-W10/G2	ECN5222BAA-W10/G2	ECN5224BAA-W10/G2	ECN5228BAA-W10/G2	AN16GN0AB
	20	100A	ECN5221BAA-W10/G4	ECN5222BAA-W10/G4	ECN5224BAA-W10/G4	ECN5228BAA-W10/G4	
	25	100A	ECN5221BAA-W10/G9	ECN5222BAA-W10/G9	ECN5224BAA-W10/G9	ECN5228BAA-W10/G9	
3YD	30	100A	ECN5231BAA-W10/G14	ECN5232BAA-W10/G14	ECN5234BAA-W10/G14	ECN5238BAA-W10/G14	AN16KN0AB
	40	200A	ECN5231BAA-W10/G19	ECN5232BAA-W10/G19	ECN5234BAA-W10/G19	ECN5238BAA-W10/G19	
	50	200A	ECN5231BAA-W10/G24	ECN5232BAA-W10/G24	ECN5234BAA-W10/G24	ECN5238BAA-W10/G24	
4YD	60	200A	ECN5241BAA-W10/G29	ECN5242BAA-W10/G29	ECN5244BAA-W10/G29	ECN5248BAA-W10/G29	AN16NN0AB
	75	400A	ECN5241BAA-W10/G34	ECN5242BAA-W10/G34	ECN5244BAA-W10/G34	ECN5248BAA-W10/G34	
5YD	100	400A	ECN5251BAA-W10/G39	ECN5252BAA-W10/G39	ECN5254BAA-W10/G39	ECN5258BAA-W10/G39	AN16SN0AB
	125	400A	ECN5251BAA-W10/G44	ECN5252BAA-W10/G44	ECN5254BAA-W10/G44	ECN5258BAA-W10/G44	
	150	600A	ECN5251BAA-W10/G49	ECN5252BAA-W10/G49	ECN5254BAA-W10/G49	ECN5258BAA-W10/G49	
6YD	200	600A	ECN5261BAA-W10/G54	ECN5262BAA-W10/G54	ECN5263BAA-W10/G54 ④	ECN5268BAA-W10/G54	AN16TN0AB
	250	⑤	ECN5261BAA-W10/G59	ECN5262BAA-W10/G59	ECN5263BAA-W10/G59 ④	ECN5268BAA-W10/G59	
	300		ECN5261BAA-W10/G64	ECN5262BAA-W10/G64	ECN5263BAA-W10/G64 ④	ECN5268BAA-W10/G64	
	350		ECN5261BAA-W10/G69	ECN5262BAA-W10/G69	ECN5263BAA-W10/G69 ④	ECN5268BAA-W10/G69	
7YD	400	⑤	ECN5271BAA-W10/G74	ECN5272BAA-W10/G74	ECN5273BAA-W10/G74 ④	ECN5278BAA-W10/G74	AN16UN0AB
	450		ECN5271BAA-W10/G79	ECN5272BAA-W10/G79	ECN5273BAA-W10/G79 ④	ECN5278BAA-W10/G79	
	500		ECN5271BAA-W10/G84	ECN5272BAA-W10/G84	ECN5273BAA-W10/G84 ④	ECN5278BAA-W10/G84	
8YD	600	⑤	ECN5281BAA-W10/G89	ECN5282BAA-W10/G89	ECN5283BAA-W10/G89 ④	ECN5288BAA-W10/G89	AN16VN0AB
	700		ECN5281BAA-W10/G94	ECN5282BAA-W10/G94	ECN5283BAA-W10/G94 ④	ECN5288BAA-W10/G94	
	750		ECN5281BAA-W10/G99	ECN5282BAA-W10/G99	ECN5283BAA-W10/G99 ④	ECN5288BAA-W10/G99	
	800		ECN5281BAA-W10/G103	ECN5282BAA-W10/G103	ECN5283BAA-W10/G103 ④	ECN5288BAA-W10/G103	

Starters do not include heater packs. Select 1 carton of 3 heater packs. Heater Pack Selection, **Page 16-6**.

① All reduced voltage starters are furnished with 120V coils and control transformer connected for 120V secondary. If Modification Code **C35** separate control is specified, the control transformer is omitted.
② All Type 12 enclosures are standardized with external reset. For internal reset, order Modification Code **R5**.
③ Type 12 enclosure is without safety door interlock.
④ Type 4 (Painted Steel) Sizes 6 – 8YD.
⑤ Supply hp, voltage, FLA and whether motor is design E or not when ordering starter.
⑥ The Catalog Numbers listed in the Type 4X column are for Type 4X 304-Grade Stainless Steel, as indicated by the seventh digit **4**. Example: ECN5224EAA. To order Type 4X 316-Grade Stainless Steel, change that digit to **9**. To order Type 4 Painted Steel, change that digit to **3**. To order Nonmetallic, change that digit to **5**. For details on these Alternate Enclosures, see **Tab 14**.
⑦ Also requires 2 matching contactors and mechanical interlock.

Cover Control ..... **Page 6-20**
Other Magnet Coils ..... **Page 6-19**
Dimensions ..... **Page 15-8**
Accessories ..... **Page 16-4**
Modifications ..... **Page 16-40**
Technical Data ..... **Page 18-7**

Table 6-32. Class ECN52 — Combination Closed Transition Wye Delta Starter — Non-fusible Disconnect (Continued)

NEMA Size	Max. hp Rating	Dis-connect Amps.	Type 1 General Purpose	Type 3R Rainproof	Type 4X ⑥ Water & Dust-Tight Stainless Steel	Type 12 Dust-Tight Industrial External Reset ②③	Component Starter (Open) ⑦
			Catalog Number	Catalog Number	Catalog Number	Catalog Number	Catalog Number
Motor Volts 460/Magnet Coil Voltage 120 ①							
2YD	20	60A	ECN5221CAA-W10/G6	ECN5222CAA-W10/G6	ECN5224CAA-W10/G6	ECN5228CAA-W10/G6	AN16GN0AB
	25	60A	ECN5221CAA-W10/G11	ECN5222CAA-W10/G11	ECN5224CAA-W10/G11	ECN5228CAA-W10/G11	
	30	60A	ECN5221CAA-W10/G16	ECN5222CAA-W10/G16	ECN5224CAA-W10/G16	ECN5228CAA-W10/G16	
	40	60A	ECN5221CAA-W10/G21	ECN5222CAA-W10/G21	ECN5224CAA-W10/G21	ECN5228CAA-W10/G21	
3YD	50	100A	ECN5231CAA-W10/G26	ECN5232CAA-W10/G26	ECN5234CAA-W10/G26	ECN5238CAA-W10/G26	AN16KN0AB
	60	100A	ECN5231CAA-W10/G31	ECN5232CAA-W10/G31	ECN5234CAA-W10/G31	ECN5238CAA-W10/G31	
	75	200A	ECN5231CAA-W10/G36	ECN5232CAA-W10/G36	ECN5234CAA-W10/G36	ECN5238CAA-W10/G36	
4YD	100	200A	ECN5241CAA-W10/G41	ECN5242CAA-W10/G41	ECN5244CAA-W10/G41	ECN5248CAA-W10/G41	AN16NN0AB
	125	200A	ECN5241CAA-W10/G46	ECN5242CAA-W10/G46	ECN5244CAA-W10/G46	ECN5248CAA-W10/G46	
	150	400A	ECN5241CAA-W10/G51	ECN5242CAA-W10/G51	ECN5244CAA-W10/G51	ECN5248CAA-W10/G51	
5YD	200	400A	ECN5251CAA-W10/G56	ECN5252CAA-W10/G56	ECN5254CAA-W10/G56	ECN5258CAA-W10/G56	AN16SN0AB
	250	400A	ECN5251CAA-W10/G61	ECN5252CAA-W10/G61	ECN5254CAA-W10/G61	ECN5258CAA-W10/G61	
	300	600A	ECN5251CAA-W10/G66	ECN5252CAA-W10/G66	ECN5254CAA-W10/G66	ECN5258CAA-W10/G66	
6YD	350	600A	ECN5261CAA-W10/G71	ECN5262CAA-W10/G71	ECN5263CAA-W10/G71 ④	ECN5268CAA-W10/G71	AN16TN0AB
	400	600A	ECN5261CAA-W10/G76	ECN5262CAA-W10/G76	ECN5263CAA-W10/G76 ④	ECN5268CAA-W10/G76	
	450	600A	ECN5261CAA-W10/G81	ECN5262CAA-W10/G81	ECN5263CAA-W10/G81 ④	ECN5268CAA-W10/G81	
	500	800A	ECN5261CAA-W10/G86	ECN5262CAA-W10/G86	ECN5263CAA-W10/G86 ④	ECN5268CAA-W10/G86	
	600	1200A	ECN5261CAA-W10/G91	ECN5262CAA-W10/G91	ECN5263CAA-W10/G91 ④	ECN5268CAA-W10/G91	
	700	1200A	ECN5261CAA-W10/G96	ECN5262CAA-W10/G96	ECN5263CAA-W10/G96 ④	ECN5268CAA-W10/G96	
7YD	750	1200A	ECN5271CAA-W10/G101	ECN5272CAA-W10/G101	ECN5273CAA-W10/G101 ④	ECN5278CAA-W10/G101	AN16UN0AB
	800	⑤	ECN5271CAA-W10/G105	ECN5272CAA-W10/G105	ECN5273CAA-W10/G105 ④	ECN5278CAA-W10/G105	
	900		ECN5271CAA-W10/G108	ECN5272CAA-W10/G108	ECN5273CAA-W10/G108 ④	ECN5278CAA-W10/G108	
	1000		ECN5271CAA-W10/G111	ECN5272CAA-W10/G111	ECN5273CAA-W10/G111 ④	ECN5278CAA-W10/G111	
8YD	1250	⑤	ECN5281CAA-W10/G114	ECN5282CAA-W10/G114	ECN5283CAA-W10/G114 ④	ECN5288CAA-W10/G114	AN16VN0AB
	1500		ECN5281CAA-W10/G117	ECN5282CAA-W10/G117	ECN5283CAA-W10/G117 ④	ECN5288CAA-W10/G117	
Motor Volts 575/Magnet Coil Voltage 120 ①							
2YD	20	30A	ECN5221DAA-W10/G7	ECN5222DAA-W10/G7	ECN5224DAA-W10/G7	ECN5228DAA-W10/G7	AN16GN0AB
	25	60A	ECN5221DAA-W10/G12	ECN5222DAA-W10/G12	ECN5224DAA-W10/G12	ECN5228DAA-W10/G12	
	30	60A	ECN5221DAA-W10/G17	ECN5222DAA-W10/G17	ECN5224DAA-W10/G17	ECN5228DAA-W10/G17	
	40	60A	ECN5221DAA-W10/G22	ECN5222DAA-W10/G22	ECN5224DAA-W10/G22	ECN5228DAA-W10/G22	
3YD	50	100A	ECN5231DAA-W10/G27	ECN5232DAA-W10/G27	ECN5234DAA-W10/G27	ECN5238DAA-W10/G27	AN16KN0AB
	60	100A	ECN5231DAA-W10/G32	ECN5232DAA-W10/G32	ECN5234DAA-W10/G32	ECN5238DAA-W10/G32	
	75	100A	ECN5231DAA-W10/G37	ECN5232DAA-W10/G37	ECN5234DAA-W10/G37	ECN5238DAA-W10/G37	
4YD	100	200A	ECN5241DAA-W10/G42	ECN5242DAA-W10/G42	ECN5244DAA-W10/G42	ECN5248DAA-W10/G42	AN16NN0AB
	125	200A	ECN5241DAA-W10/G47	ECN5242DAA-W10/G47	ECN5244DAA-W10/G47	ECN5248DAA-W10/G47	
	150	200A	ECN5241DAA-W10/G52	ECN5242DAA-W10/G52	ECN5244DAA-W10/G52	ECN5248DAA-W10/G52	
5YD	200	400A	ECN5251DAA-W10/G57	ECN5252DAA-W10/G57	ECN5254DAA-W10/G57	ECN5258DAA-W10/G57	AN16SN0AB
	250	400A	ECN5251DAA-W10/G62	ECN5252DAA-W10/G62	ECN5254DAA-W10/G62	ECN5258DAA-W10/G62	
	300	400A	ECN5251DAA-W10/G67	ECN5252DAA-W10/G67	ECN5254DAA-W10/G67	ECN5258DAA-W10/G67	
6YD	350	400A	ECN5261DAA-W10/G72	ECN5262DAA-W10/G72	ECN5263DAA-W10/G72 ④	ECN5268DAA-W10/G72	AN16TN0AB
	400	600A	ECN5261DAA-W10/G77	ECN5262DAA-W10/G77	ECN5263DAA-W10/G77 ④	ECN5268DAA-W10/G77	
	450	600A	ECN5261DAA-W10/G82	ECN5262DAA-W10/G82	ECN5263DAA-W10/G82 ④	ECN5268DAA-W10/G82	
	500	600A	ECN5261DAA-W10/G87	ECN5262DAA-W10/G87	ECN5263DAA-W10/G87 ④	ECN5268DAA-W10/G87	
	600	800A	ECN5261DAA-W10/G92	ECN5262DAA-W10/G92	ECN5263DAA-W10/G92 ④	ECN5268DAA-W10/G92	
	700	800A	ECN5261DAA-W10/G97	ECN5262DAA-W10/G97	ECN5263DAA-W10/G97 ④	ECN5268DAA-W10/G97	
7YD	750	⑤	ECN5271DAA-W10/G102	ECN5272DAA-W10/G102	ECN5273DAA-W10/G102 ④	ECN5278DAA-W10/G102	AN16UN0AB
	800		ECN5271DAA-W10/G106	ECN5272DAA-W10/G106	ECN5273DAA-W10/G106 ④	ECN5278DAA-W10/G106	
	900		ECN5271DAA-W10/G109	ECN5272DAA-W10/G109	ECN5273DAA-W10/G109 ④	ECN5278DAA-W10/G109	
	1000		ECN5271DAA-W10/G112	ECN5272DAA-W10/G112	ECN5273DAA-W10/G112 ④	ECN5278DAA-W10/G112	
8YD	1250	⑤	ECN5281DAA-W10/G115	ECN5282DAA-W10/G115	ECN5283DAA-W10/G115 ④	ECN5288DAA-W10/G115	AN16VN0AB
	1500		ECN5281DAA-W10/G118	ECN5282DAA-W10/G118	ECN5283DAA-W10/G118 ④	ECN5288DAA-W10/G118	

Starters do not include heater packs. Select 1 carton of 3 heater packs. Heater Pack Selection, **Page 16-6**.

① All reduced voltage starters are furnished with 120V coils and control transformer connected for 120V secondary. If Modification Code **C35** separate control is specified, the control transformer is omitted.
② All Type 12 enclosures are standardized with external reset. For internal reset, order Modification Code **R5**.
③ Type 12 enclosure is without safety door interlock.
④ Type 4 (Painted Steel) Sizes 6 – 8YD.
⑤ Supply hp, voltage, FLA and whether motor is design E or not when ordering starter.
⑥ The Catalog Numbers listed in the Type 4X column are for Type 4X 304-Grade Stainless Steel, as indicated by the seventh digit **4**. Example: ECN5224CAA. To order Type 4X 316-Grade Stainless Steel, change that digit to **9**. To order Type 4 Painted Steel, change that digit to **3**. To order Nonmetallic, change that digit to **5**. For details on these Alternate Enclosures, see **Tab 14**.
⑦ Also requires 2 matching contactors and mechanical interlock.

Cover Control ..... **Page 6-20**
Other Magnet Coils ..... **Page 6-19**
Dimensions ..... **Page 15-8**
Accessories ..... **Page 16-4**
Modifications ..... **Page 16-40**
Technical Data ..... **Page 18-7**

Table 6-33. Class ECN53 — Combination Closed Transition Wye Delta Starter — Circuit Breaker

NEMA Size	Max. hp Rating	Circuit Breaker Type	Type 1 General Purpose	Type 3R Rainproof	Type 4X ⑥ Water & Dust-Tight Stainless Steel	Type 12 Dust-Tight Industrial External Reset ②③	Component Starter (Open) ⑦
			Catalog Number	Catalog Number	Catalog Number	Catalog Number	Catalog Number
Motor Volts 200/Magnet Coil Voltage 120 ①							
2YD	15	70A	ECN5321EAH-W10/G1	ECN5322EAH-W10/G1	ECN5324EAH-W10/G1	ECN5328EAH-W10/G1	AN16GN0AB
	20	90A	ECN5321EAJ-W10/G3	ECN5322EAJ-W10/G3	ECN5324EAJ-W10/G3	ECN5328EAJ-W10/G3	
3YD	25	100A	ECN5331EAK-W10/G8	ECN5332EAK-W10/G8	ECN5334EAK-W10/G8	ECN5338EAK-W10/G8	AN16KN0AB
	30	125A	ECN5331EAL-W10/G13	ECN5332EAL-W10/G13	ECN5334EAL-W10/G13	ECN5338EAL-W10/G13	
	40	175A	ECN5331EAN-W10/G18	ECN5332EAN-W10/G18	ECN5334EAN-W10/G18	ECN5338EAN-W10/G18	
4YD	50	200A	ECN5341EAP-W10/G23	ECN5342EAP-W10/G23	ECN5344EAP-W10/G23	ECN5348EAP-W10/G23	AN16NN0AB
	60	225A	ECN5341EAQ-W10/G28	ECN5342EAQ-W10/G28	ECN5344EAQ-W10/G28	ECN5348EAQ-W10/G28	
5YD	75	300A	ECN5351EAS-W10/G33	ECN5352EAS-W10/G33	ECN5354EAS-W10/G33	ECN5358EAS-W10/G33	AN16SN0AB
	100	350A	ECN5351EAV-W10/G38	ECN5352EAV-W10/G38	ECN5354EAV-W10/G38	ECN5358EAV-W10/G38	
	125	450A	ECN5351EAX-W10/G43	ECN5352EAX-W10/G43	ECN5354EAX-W10/G43	ECN5358EAX-W10/G43	
	150	500A	ECN5351EAY-W10/G48	ECN5352EAY-W10/G48	ECN5354EAY-W10/G48	ECN5358EAY-W10/G48	
6YD	200	800A	ECN5361EA2-W10/G53	ECN5362EA2-W10/G53	ECN5363EA2-W10/G53 ④	ECN5368EA2-W10/G33	AN16TN0AB
	250	1000A	ECN5361EA3-W10/G58	ECN5362EA3-W10/G58	ECN5363EA3-W10/G58 ④	ECN5368EA3-W10/G58	
	300	1200A	ECN5361EA4-W10/G63	ECN5362EA4-W10/G63	ECN5363EA4-W10/G63 ④	ECN5368EA4-W10/G63	
7YD	350	⑤	ECN5371EAU-W10/G68	ECN5372EAU-W10/G68	ECN5373EAU-W10/G68 ④	ECN5378EAU-W10/G68	AN16UN0AB
	400		ECN5371EAU-W10/G73	ECN5372EAU-W10/G73	ECN5373EAU-W10/G73 ④	ECN5378EAU-W10/G73	
	450		ECN5371EAU-W10/G78	ECN5372EAU-W10/G78	ECN5373EAU-W10/G78 ④	ECN5378EAU-W10/G78	
	500		ECN5371EAU-W10/G83	ECN5372EAU-W10/G83	ECN5373EAU-W10/G83 ④	ECN5378EAU-W10/G83	
8YD	600	⑤	ECN5381EAU-W10/G88	ECN5382EAU-W10/G88	ECN5383EAU-W10/G88 ④	ECN5388EAU-W10/G88	AN16VN0AB
	700		ECN5381EAU-W10/G93	ECN5382EAU-W10/G93	ECN5383EAU-W10/G93 ④	ECN5388EAU-W10/G93	
	750		ECN5381EAU-W10/G98	ECN5382EAU-W10/G98	ECN5383EAU-W10/G98 ④	ECN5388EAU-W10/G98	
Motor Volts 230/Magnet Coil Voltage 120 ①							
2YD	15	60A	ECN5321BAG-W10/G2	ECN5322BAG-W10/G2	ECN5324BAG-W10/G2	ECN5328BAG-W10/G2	AN16GN0AB
	20	70A	ECN5321BAH-W10/G4	ECN5322BAH-W10/G4	ECN5324BAH-W10/G4	ECN5328BAH-W10/G4	
	25	90A	ECN5321BAJ-W10/G9	ECN5322BAJ-W10/G9	ECN5324BAJ-W10/G9	ECN5328BAJ-W10/G9	
3YD	30	125A	ECN5331BAL-W10/G14	ECN5332BAL-W10/G14	ECN5334BAL-W10/G14	ECN5338BAL-W10/G14	AN16KN0AB
	40	150A	ECN5331BAM-W10/G19	ECN5332BAM-W10/G19	ECN5334BAM-W10/G19	ECN5338BAM-W10/G19	
	50	175A	ECN5331BAN-W10/G24	ECN5332BAN-W10/G24	ECN5334BAN-W10/G24	ECN5338BAN-W10/G24	
4YD	60	200A	ECN5341BAP-W10/G29	ECN5342BAP-W10/G29	ECN5344BAP-W10/G29	ECN5348BAP-W10/G29	AN16NN0AB
	75	250A	ECN5341BAR-W10/G34	ECN5342BAR-W10/G34	ECN5344BAR-W10/G34	ECN5348BAR-W10/G34	
5YD	100	350A	ECN5351BAV-W10/G39	ECN5352BAV-W10/G39	ECN5354BAV-W10/G39	ECN5358BAV-W10/G39	AN16SN0AB
	125	400A	ECN5351BAW-W10/G44	ECN5352BAW-W10/G44	ECN5354BAW-W10/G44	ECN5358BAW-W10/G44	
	150	500A	ECN5351BAY-W10/G49	ECN5352BAY-W10/G49	ECN5354BAY-W10/G49	ECN5358BAY-W10/G49	
6YD	200	600A	ECN5361BAZ-W10/G54	ECN5362BAZ-W10/G54	ECN5363BAZ-W10/G54 ④	ECN5368BAZ-W10/G54	AN16TN0AB
	250	800A	ECN5361BA2-W10/G59	ECN5362BA2-W10/G59	ECN5363BA2-W10/G59 ④	ECN5368BA2-W10/G59	
	300	1000A	ECN5361BA3-W10/G64	ECN5362BA3-W10/G64	ECN5363BA3-W10/G64 ④	ECN5368BA3-W10/G64	
	350	1200A	ECN5361BA4-W10/G69	ECN5362BA4-W10/G69	ECN5363BA4-W10/G69 ④	ECN5368BA4-W10/G69	
7YD	400	⑤	ECN5371BAU-W10/G74	ECN5372BAU-W10/G74	ECN5373BAU-W10/G74 ④	ECN5378BAU-W10/G74	AN16UN0AB
	450		ECN5371BAU-W10/G79	ECN5372BAU-W10/G79	ECN5373BAU-W10/G79 ④	ECN5378BAU-W10/G79	
	500		ECN5371BAU-W10/G84	ECN5372BAU-W10/G84	ECN5373BAU-W10/G84 ④	ECN5378BAU-W10/G84	
8YD	600	⑤	ECN5381BAU-W10/G89	ECN5382BAU-W10/G89	ECN5383BAU-W10/G89 ④	ECN5388BAU-W10/G89	AN16VN0AB
	700		ECN5381BAU-W10/G94	ECN5382BAU-W10/G94	ECN5383BAU-W10/G94 ④	ECN5388BAU-W10/G94	
	750		ECN5381BAU-W10/G99	ECN5382BAU-W10/G99	ECN5383BAU-W10/G99 ④	ECN5388BAU-W10/G99	
	800		ECN5381BAU-W10/G103	ECN5382BAU-W10/G103	ECN5383BAU-W10/G103 ④	ECN5388BAU-W10/G103	

Starters do not include heater packs. Select 1 carton of 3 heater packs. Heater Pack Selection, **Page 16-6**.

① All reduced voltage starters are furnished with 120V coils and control transformer connected for 120V secondary. If Modification Code **C35** separate control is specified, the control transformer is omitted.
② All Type 12 enclosures are standardized with external reset. For internal reset, order Modification Code **R5**.
③ Type 12 enclosure is without safety door interlock.
④ Type 4 (Painted Steel) Sizes 6 – 8YD.
⑤ Supply hp, voltage, FLA and whether motor is design E or not when ordering starter.
⑥ The Catalog Numbers listed in the Type 4X column are for Type 4X 304-Grade Stainless Steel, as indicated by the seventh digit **4**. Example: ECN5324EAH. To order Type 4X 316-Grade Stainless Steel, change that digit to **9**. To order Type 4 Painted Steel, change that digit to **3**. To order Nonmetallic, change that digit to **5**. For details on these Alternate Enclosures, see **Tab 14**.
⑦ Also requires 2 matching contactors and mechanical interlock.

Cover Control ..... **Page 6-20**
Other Magnet Coils ..... **Page 6-19**
Dimensions ..... **Page 15-8**
Accessories ..... **Page 16-4**
Modifications ..... **Page 16-40**
Technical Data ..... **Page 18-7**

Table 6-33. Class ECN53 — Combination Closed Transition Wye Delta Starter — Circuit Breaker (Continued)

NEMA Size	Max. hp Rating	Circuit Breaker Type	Type 1 General Purpose	Type 3R Rainproof	Type 4X ⑥ Water & Dust-Tight Stainless Steel	Type 12 Dust-Tight Industrial External Reset ②③	Component Starter (Open) ⑦
			Catalog Number	Catalog Number	Catalog Number	Catalog Number	Catalog Number
Motor Volts 460/Magnet Coil Voltage 120 ①							
2YD	20	40A	ECN5321CAE-W10/G6	ECN5322CAE-W10/G6	ECN5324CAE-W10/G6	ECN5328CAE-W10/G6	AN16GN0AB
	25	50A	ECN5321CAF-W10/G11	ECN5322CAF-W10/G11	ECN5324CAF-W10/G11	ECN5328CAF-W10/G11	
	30	60A	ECN5321CAG-W10/G16	ECN5322CAG-W10/G16	ECN5324CAG-W10/G16	ECN5328CAG-W10/G16	
	40	70A	ECN5321CAH-W10/G21	ECN5322CAH-W10/G21	ECN5324CAH-W10/G21	ECN5328CAH-W10/G21	
3YD	50	90A	ECN5331CAJ-W10/G26	ECN5332CAJ-W10/G26	ECN5334CAJ-W10/G26	ECN5338CAJ-W10/G26	AN16KN0AB
	60	100A	ECN5331CAK-W10/G31	ECN5332CAK-W10/G31	ECN5334CAK-W10/G31	ECN5338CAK-W10/G31	
	75	125A	ECN5331CAL-W10/G36	ECN5332CAL-W10/G36	ECN5334CAL-W10/G36	ECN5338CAL-W10/G36	
4YD	100	175A	ECN5341CAN-W10/G41	ECN5342CAN-W10/G41	ECN5344CAN-W10/G41	ECN5348CAN-W10/G41	AN16NN0AB
	125	225A	ECN5341CAQ-W10/G46	ECN5342CAQ-W10/G46	ECN5344CAQ-W10/G46	ECN5348CAQ-W10/G46	
	150	250A	ECN5341CAR-W10/G51	ECN5342CAR-W10/G51	ECN5344CAR-W10/G51	ECN5348CAR-W10/G51	
5YD	200	350A	ECN5351CAV-W10/G56	ECN5352CAV-W10/G56	ECN5354CAV-W10/G56	ECN5358CAV-W10/G56	AN16SN0AB
	250	400A	ECN5351CAW-W10/G61	ECN5352CAW-W10/G61	ECN5354CAW-W10/G61	ECN5358CAW-W10/G61	
	300	500A	ECN5351CAY-W10/G66	ECN5352CAY-W10/G66	ECN5354CAY-W10/G66	ECN5358CAY-W10/G66	
6YD	350	600A	ECN5361CAZ-W10/G71	ECN5362CAZ-W10/G71	ECN5363CAZ-W10/G71 ④	ECN5368CAZ-W10/G71	AN16TN0AB
	400	600A	ECN5361CAZ-W10/G76	ECN5362CAZ-W10/G76	ECN5363CAZ-W10/G76 ④	ECN5368CAZ-W10/G76	
	450	700A	ECN5361CA1-W10/G81	ECN5362CA1-W10/G81	ECN5363CA1-W10/G81 ④	ECN5368CA1-W10/G81	
	500	800A	ECN5361CA2-W10/G86	ECN5362CA2-W10/G86	ECN5363CA2-W10/G86 ④	ECN5368CA2-W10/G86	
	600	1000A	ECN5361CA3-W10/G91	ECN5362CA3-W10/G91	ECN5363CA3-W10/G91 ④	ECN5368CA3-W10/G91	
	700	1200A	ECN5361CA4-W10/G96	ECN5362CA4-W10/G96	ECN5363CA4-W10/G96 ④	ECN5368CA4-W10/G96	
7YD	750	④	ECN5371CAU-W10/G101	ECN5372CAU-W10/G101	ECN5373CAU-W10/G101 ④	ECN5378CAU-W10/G101	AN16UN0AB
	800		ECN5371CAU-W10/G105	ECN5372CAU-W10/G105	ECN5373CAU-W10/G105 ④	ECN5378CAU-W10/G105	
	900		ECN5371CAU-W10/G108	ECN5372CAU-W10/G108	ECN5373CAU-W10/G108 ④	ECN5378CAU-W10/G108	
	1000		ECN5371CAU-W10/G111	ECN5372CAU-W10/G111	ECN5373CAU-W10/G111 ④	ECN5378CAU-W10/G111	
8YD	1250	④	ECN5381CAU-W10/G114	ECN5382CAU-W10/G114	ECN5383CAU-W10/G114 ④	ECN5388CAU-W10/G114	AN16VN0AB
	1500		ECN5381CAU-W10/G117	ECN5382CAU-W10/G117	ECN5383CAU-W10/G117 ④	ECN5388CAU-W10/G117	
Motor Volts 575/Magnet Coil Voltage 120 ①							
2YD	20	30A	ECN5321DAD-W10/G7	ECN5322DAD-W10/G7	ECN5324DAD-W10/G7	ECN5328DAD-W10/G7	AN16GN0AB
	25	40A	ECN5321DAE-W10/G12	ECN5322DAE-W10/G12	ECN5324DAE-W10/G12	ECN5328DAE-W10/G12	
	30	50A	ECN5321DAF-W10/G17	ECN5322DAF-W10/G17	ECN5324DAF-W10/G17	ECN5328DAF-W10/G17	
	40	60A	ECN5321DAG-W10/G22	ECN5322DAG-W10/G22	ECN5324DAG-W10/G22	ECN5328DAG-W10/G22	
3YD	50	70A	ECN5331DAH-W10/G27	ECN5332DAH-W10/G27	ECN5334DAH-W10/G27	ECN5338DAH-W10/G27	AN16KN0AB
	60	90A	ECN5331DAJ-W10/G32	ECN5332DAJ-W10/G32	ECN5334DAJ-W10/G32	ECN5338DAJ-W10/G32	
	75	100A	ECN5331DAK-W10/G37	ECN5332DAK-W10/G37	ECN5334DAK-W10/G37	ECN5338DAK-W10/G37	
4YD	100	125A	ECN5341DAL-W10/G42	ECN5342DAL-W10/G42	ECN5344DAL-W10/G42	ECN5348DAL-W10/G42	AN16NN0AB
	125	175A	ECN5341DAN-W10/G47	ECN5342DAN-W10/G47	ECN5344DAN-W10/G47	ECN5348DAN-W10/G47	
	150	200A	ECN5341DAP-W10/G52	ECN5342DAP-W10/G52	ECN5344DAP-W10/G52	ECN5348DAP-W10/G52	
5YD	200	250A	ECN5351DAR-W10/G57	ECN5352DAR-W10/G57	ECN5354DAR-W10/G57	ECN5358DAR-W10/G57	AN16SN0AB
	250	350A	ECN5351DAV-W10/G62	ECN5352DAV-W10/G62	ECN5354DAV-W10/G62	ECN5358DAV-W10/G62	
	300	350A	ECN5351DAV-W10/G67	ECN5352DAV-W10/G67	ECN5354DAV-W10/G67	ECN5358DAV-W10/G67	
6YD	350	500A	ECN5361DAY-W10/G72	ECN5362DAY-W10/G72	ECN5363DAY-W10/G72 ④	ECN5368DAY-W10/G72	AN16TN0AB
	400	500A	ECN5361DAY-W10/G77	ECN5362DAY-W10/G77	ECN5363DAY-W10/G77 ④	ECN5368DAY-W10/G77	
	450	600A	ECN5361DAZ-W10/G82	ECN5362DAZ-W10/G82	ECN5363DAZ-W10/G82 ④	ECN5368DAZ-W10/G82	
	500	600A	ECN5361DAZ-W10/G87	ECN5362DAZ-W10/G87	ECN5363DAZ-W10/G87 ④	ECN5368DAZ-W10/G87	
	600	800A	ECN5361DA2-W10/G92	ECN5362DA2-W10/G92	ECN5363DA2-W10/G92 ④	ECN5368DA2-W10/G92	
	700	1000A	ECN5361DA3-W10/G97	ECN5362DA3-W10/G97	ECN5363DA3-W10/G97 ④	ECN5368DA3-W10/G97	
7YD	750	④	ECN5371DAU-W10/G102	ECN5372DAU-W10/G102	ECN5373DAU-W10/G102 ④	ECN5378DAU-W10/G102	AN16UN0AB
	800		ECN5371DAU-W10/G106	ECN5372DAU-W10/G106	ECN5373DAU-W10/G106 ④	ECN5378DAU-W10/G106	
	900		ECN5371DAU-W10/G109	ECN5372DAU-W10/G109	ECN5373DAU-W10/G109 ④	ECN5378DAU-W10/G109	
	1000		ECN5371DAU-W10/G112	ECN5372DAU-W10/G112	ECN5373DAU-W10/G112 ④	ECN5378DAU-W10/G112	
8YD	1250	④	ECN5381DAU-W10/G115	ECN5382DAU-W10/G115	ECN5383DAU-W10/G115 ④	ECN5388DAU-W10/G115	AN16VN0AB
	1500		ECN5381DAU-W10/G118	ECN5382DAU-W10/G118	ECN5383DAU-W10/G118 ④	ECN5388DAU-W10/G118	

Starters do not include heater packs. Select 1 carton of 3 heater packs. Heater Pack Selection, **Page 16-6**.

① All reduced voltage starters are furnished with 120V coils and control transformer connected for 120V secondary. If Modification Code **C35** separate control is specified, the control transformer is omitted.
② All Type 12 enclosures are standardized with external reset. For internal reset, order Modification Code **R5**.
③ Type 12 enclosure is without safety door interlock.
④ Type 4 (Painted Steel) Sizes 6 – 8YD.
⑤ Supply hp, voltage, FLA and whether motor is design E or not when ordering starter.
⑥ The Catalog Numbers listed in the Type 4X column are for Type 4X 304-Grade Stainless Steel, as indicated by the seventh digit **4**. Example: ECN5324CAE. To order Type 4X 316-Grade Stainless Steel, change that digit to **9**. To order Type 4 Painted Steel, change that digit to **3**. To order Nonmetallic, change that digit to **5**. For details on these Alternate Enclosures, see **Tab 14**.
⑦ Also requires 2 matching contactors and mechanical interlock.

Cover Control ..... **Page 6-20**
Other Magnet Coils ..... **Page 6-19**
Dimensions ..... **Page 15-8**
Accessories ..... **Page 16-4**
Modifications ..... **Page 16-40**
Technical Data ..... **Page 18-7**

Product Description

- 3-Phase Magnetic
- Interchangeable Heater OLR

Standard ECN64, 65 controllers have a HAND/OFF/AUTO selector switch and START pushbutton mounted on the flange of the enclosure and are wired as illustrated in **Figure 6-10**.

Note: If branch circuit protective device is 45A or greater, C320FBR1 fuse kit (panel mounted) may be required for control circuit protection per NEC 430-72.

Product Selection

Table 6-34. Class ECN64 — Combination Part Winding Pump Control Starter — Fusible

Motor Voltage	Max. hp 50/60 Hz ①	NEMA Size	Fuse Clip Rating		Catalog Number
			Amperes	Volts	
230	50	3PW	200	250	**ECN6432BAH**
460	50		100	600	**ECN6432CAG**
460	75		200	600	**ECN6432CAJ**
230	75	4PW	400	250	**ECN6442BAK**
460	125		200	600	**ECN6442CAJ**
460	150		400	600	**ECN6442CAL**
230	100	5PW	400	250	**ECN6452BAK**
230	150		600	250	**ECN6452BAM**
460	200		400	600	**ECN6452CAL**
460	350		600	600	**ECN6452CAN**
230	300	6PW	1200 ②	250	**ECN6462BAQ**
460	600		1200 ②	600	**ECN6462CAQ**

① Horsepower ratings based on dual element fuses.
② Class L fuse mounting.

Table 6-35. Class ECN65 — Combination Part Winding Pump Control Starter — Circuit Breaker

Motor Voltage	Max. hp 50/60 Hz ③	NEMA Size	Circuit Breaker Type	Catalog Number
230	40	3PW	HFD 125	**ECN6532BAL**
230	50		HFD 150	**ECN6532BAM**
460	50		HFD 100	**ECN6532CAK**
460	75		HFD 125	**ECN6532CAL**
230	60	4PW	JD 200	**ECN6542BAP**
230	75		JD 250	**ECN6542BAR**
460	100		HFD 150	**ECN6542CAM**
460	125		JD 225	**ECN6542BAQ**
460	150		JD 250	**ECN6542CAR**
230	100	5PW	KD 350	**ECN6552BAV**
230	125		KD 400	**ECN6552BAW**
230	150		LD 500	**ECN6552BAY**
460	200		KD 350	**ECN6552CAV**
460	250		KD 400	**ECN6552CAW**
460	300		LD 500	**ECN6552CAY**
460	350		LD 600	**ECN6552CAZ**
230	350	6PW	ND 1200	**ECN6562BA4**
460	600		ND 1200	**ECN6562CA4**

Starters do not include heater packs. Select 1 carton of 3 heater packs.
Heater pack selection, **Page 16-6.**
Starters with Electronic Overload — See **Page 16-45** of Modification Codes.

③ Horsepower ratings based on dual element fuses.

Kits ..... **Page 8-4**
Modifications ..... **Page 16-40**

Wiring Diagrams

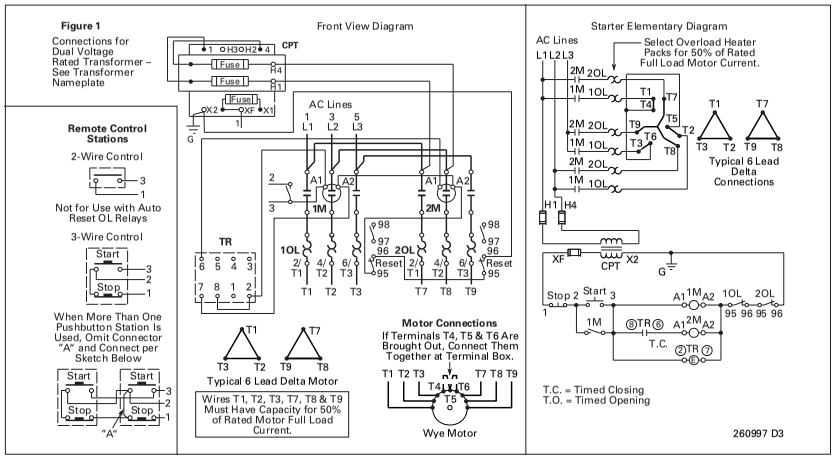

Figure 6-6. Part Winding — Non-combination

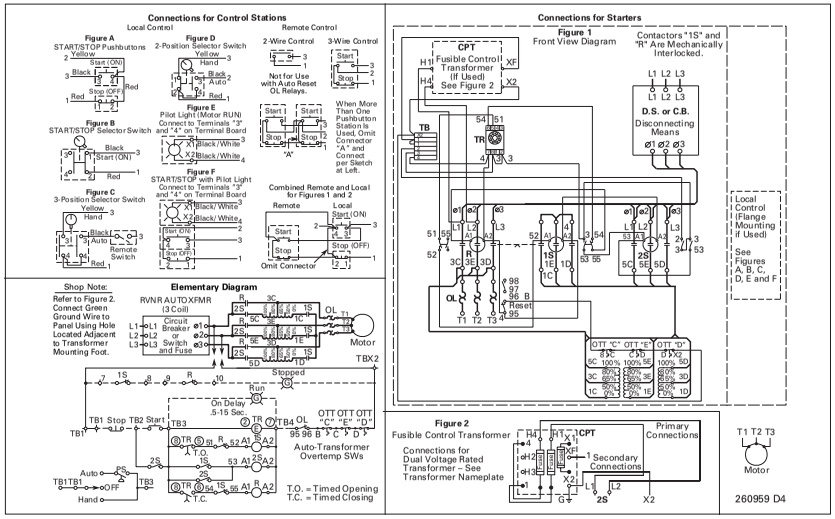

Figure 6-7. Autotransformer — Combination

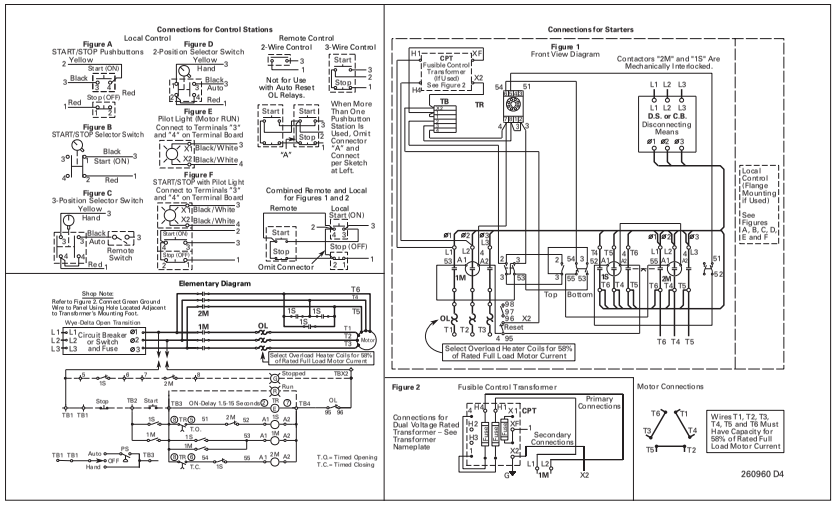

Figure 6-8. Wye Delta — Open Transition Combination

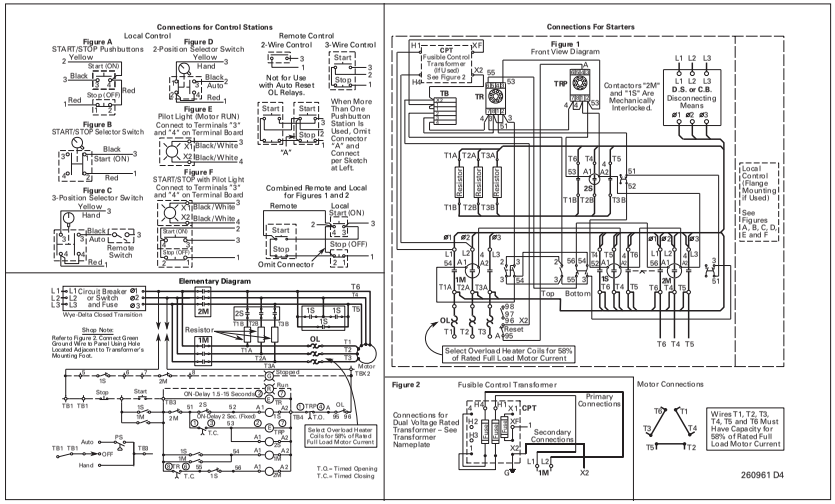

Figure 6-9. Wye Delta — Closed Transition Combination

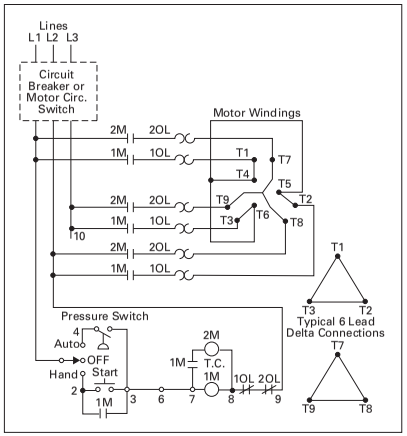

Figure 6-10. Typical Part Winding Pump Control Wiring Diagram

Adjustable Frequency Drives

Contents

Description *Page*

Microdrives

MVX9000

Product Description 7-2
Catalog Number Selection 7-4
Cover Control 7-5
Modification Codes 7-6
Product Selection 7-9
Wiring Diagrams 7-12

MVX9000 Microdrives

MVX Drive with 3-Contactor Bypass

Product Description

Eaton's Cutler-Hammer® MVX9000 is offered in a variety of enclosure options to provide protection for operator and equipment. Enclosure ratings include Type 1, 12, 3R and 4X. (Enclosure ratings are defined in **Tab 1**.)

Model MVX9000 sensorless vector adjustable frequency AC drives are designed to provide adjustable speed control of three-phase motors. These microprocessor-based, sensorless vector drives have standard features that can be programmed to tailor the drive's performance to suit a wide variety of application requirements.

The MVX9000 sensorless vector product line utilizes a 32-bit microprocessor and insulated gate bipolar transistors (IGBTs) which provide quiet motor operation, high motor efficiency and smooth low speed performance. The size and simplicity of the MVX9000 make it ideal for hassle free installations where size is a primary concern.

Models rated at 575 and 480 volts, 3-phase, 50/60 Hz are available in sizes ranging from 1 to 10 hp. Models rated at 240 volts, single- or 3-phase, 50/60 Hz are available in sizes ranging from 1/2 to7-1/2 hp.

The standard drive includes a digital display, operating and programming keys on a removable keypad. The display provides drive monitoring as well as adjustment and diagnostic information. The keys are utilized for digital adjustment and programming of the drive as well as for operator control. Separate terminal blocks for control and power wiring are provided for customer connections. Other features provided as standard include built-in DC braking, RS-485 serial communications and PID control.

The enclosed microdrives can be configured with standard modification codes including options for various cover controls, two- and three-contactor bypass, communications and traditional disconnect switch offerings.

Type 1/3R with Keypad Cover

Type 1 Enclosure

The Type 1 version of the MVX9000 sensorless vector product line utilizes a door-mountable (option) keypad. The keypad, with digital display, can be used for operating and programming the MVX9000 drive. Type 1 enclosed MVX9000s offer a standard gasketed cover in a ventilated enclosure.

Type 12 Enclosure

The Type 12 design uses a seam welded, dust-tight enclosure. These enclosures use the latest advances in cooling technology to offer space saving designs as well as providing ample space for modifications.

Type 12 Design

Type 3R Enclosure

The Type 3R design incorporates the MVX9000 technology into a compact, rainproof enclosure. Type 3R enclosures are available with a door mount keypad option utilizing a steel flange door to protect the keypad.

Type 4X Enclosure

The Type 4X enclosed MVX utilizes a seam-welded stainless steel enclosure. These enclosures use the latest advances in cooling technology to offer space saving designs as well as providing ample space for modifications.

Features

- **Drive Keypad Access** — Through-the-door access to STOP/START, speed potentiometer drive keys and programming available as an option on Type 1, 3R and 12
- Available as non-combination or combination with fusible or circuit breaker disconnect
- **Fusible Disconnect** — 30A or 60A with Class CC / J fuses or R fuses
- **Circuit Breaker** — Thermal magnetic circuit breaker with trip rating based on maximum drive FLA
- **Operating Mechanism** — Rotary or flange type with provisions for padlocking in the OFF position. An interlock defeater is built into the operating mechanism to permit the cover to be opened with the disconnect on
- **Cover Control** — Control devices available installed or in field assembly kits
- **Options** — Bus Choke, Bypass/Isolation Contactors, EMI Filter, Line Reactors, DeviceNet Interface and more

The compact design allows the controller to be located adjacent to the motor.

Standards and Certifications

Note: See **Page 18-2** for additional information on Standards and Certifications that apply to all Cutler-Hammer Enclosed Control products.

- UL Listed
- cUL Listed (indicates appropriate CSA Standard investigation)
- ABS Type Approval
- CE Mark available (Requires EMI filter)

Catalog Number Selection

Table 7-1. Enclosed Microdrive Catalog Numbering System

E C S 80 B 1 B A A

Design	
S = Solid-State	

Class	Page
80 = Non-combination	**7-9**
81 = Disconnect Switch Combination	**7-10**
82 = Motor Circuit Protector Combination	**7-11**

Frame (hp)	
B = 1/2 ①	**F** = 5
C = 1	**G** = 7-1/2
D = 2	**H** = 10 ②
E = 3	

Enclosure Type
1 = 1 — General Purpose
2 = 3R — Rainproof
3 = 4 — Painted Steel
4 = 4X — 304-Grade Stainless Steel
8 = 12 — Dust-Tight
9 = 4X — 316-Grade Stainless Steel

Voltage
B = 208 – 240V
C = 380 – 480V
D = 575V

Cover Control
See **Page 7-5**

Disconnect Rating Fuse Clips	
A = None	**E** = 60 Amp
C = 30 Amp	

Circuit Breaker Rating	
A = 15 Amp	**E** = 40 Amp
B = 20 Amp	**F** = 50 Amp
D = 30 Amp	

① Frame (hp) only available at 208 – 240V.
② Frame (hp) only available at 380 – 480V.

Cover Control

Table 7-2. MVX Non-reversing Pilot Devices

Description	Factory Installed	Type 1, 3R Kits for Field Installation	Type 12, 4X Kits for Field Installation
	Position 9 Alpha	Catalog Number	Catalog Number
None	A	—	—
START/STOP Pushbuttons	B	C400T21	C400T1
with Red RUN Pilot Light	C	C400T22 ①	—
with Red RUN/Green OFF Lights	D	C400T23 ①	—
ON/OFF Pushbuttons	E	—	C400T2
with Red RUN Pilot Light	F	—	—
with Red RUN/Green OFF Lights	G	—	—
HAND/OFF/AUTO Selector Switch	H	C400T24	C400T12
with Red RUN Pilot Light	J	C400T25 ①	—
with Red RUN/Green OFF Lights	K	C400T26 ①	—
Red RUN Pilot Light	L	C400T10 ①	C400T9 ①
Green OFF Pilot Light	M	C400T11 ①	C400T10 ①
Red RUN/Green OFF Pilot Lights	N	C400T12 ①	C400T11 ①
START/STOP Selector Switch	P	—	C400T13
with Red RUN Pilot Light	Q	—	—
with Red RUN/Green OFF Lights	R	—	—
Speed Potentiometer	S	—	—

① Add Code Letter from table below to Catalog Number for voltage — kits only. Example: C400T10**A**.

Rating	Code Letter	Rating	Code Letter	Rating	Code Letter
120V 60 Hz	A	240V 60 Hz	B	480V 60 Hz	C
208V 60 Hz	E	380V 50 Hz	L	600V 60 Hz	D

Table 7-3. MVX Reversing Pilot Devices

Description	Factory Installed	Type 1, 3R Kits for Field Installation	Type 12, 4X Kits for Field Installation
	Position 9 Alpha	Catalog Number	Catalog Number
None	A	—	—
FORWARD/REVERSE/STOP Pushbuttons	T	C400T50	C400T6
with 2 Red Pilot Lights	U	C400T51 ②	—
with 2 Red/1 Green Lights	V	C400T52 ②	—
UP/STOP/DOWN Pushbuttons	W	—	—
with 2 Red Pilot Lights	X	—	—
with 2 Red/1 Green Lights	Y	—	—
FORWARD/OFF/REVERSE Selector Switch	Z	C400T53	C400T15
with 2 Red Pilot Lights	1	C400T54 ②	—
with 2 Red/1 Green Lights	2	C400T55 ②	—
2 Red Pilot Lights	3	—	③
Green OFF Pilot Light	4	C400T11 ②	C400T10 ②
2 Red/1 Green Pilot Lights	5	—	—
Speed Potentiometer	S	—	—

② Add Code Letter from table below to Catalog Number for voltage — kits only. Example: C400T10**A**.

Rating	Code Letter	Rating	Code Letter	Rating	Code Letter
120V 60 Hz	A	240V 60 Hz	B	480V 60 Hz	C
208V 60 Hz	E	380V 50 Hz	L	600V 60 Hz	D

③ Order 2 C400T9 ②.

Modification Codes

Table 7-4. A — Auxiliary Contacts (when bypass contactor chosen)

Modification	Catalog Number Suffix	Description
Top Mounted Auxiliary Contacts (Unwired) ①	A13	1NO
	A14	1NC
	A15	1NO-1NC
	A16	2NO
	A17	2NC
	A18	2NO-1NC
	A19	1NO-2NC
	A20	3NO
	A21	3NC
	A22	3NO-1NC
	A23	2NO-2NC
	A24	1NO-3NC
	A25	4NO
	A26	4NC

① For drive only run contacts, see Mods C12 and C14.

Table 7-5. B — Breaker Modifications, Bell Alarm, DC Bus Choke

Modification	Catalog Number Suffix	Description
Breaker	B1	1NO-1NC Auxiliary Contacts
	B2	2NO-2NC Auxiliary Contacts
	B3	Shunt Trip on Circuit Breaker — 48 – 127V AC or DC
Bell Alarm	B16	Bell Alarm for GHC
Bus Choke	B20	240V or 480V DC Bus Choke, Open Core and Coil ②

② A DC bus choke may be used in place of an AC line reactor for line harmonic current reduction and for power source exceeding 500 kVA. The DC bus choke will not provide any protection for line voltage unbalance or transients.

Table 7-6. C — Control Power Transformers, Control Relays, Control Sources, Bypass Contactors

Modification	Catalog Number Suffix	Description
Control Power Transformer	C1	Standard Size CPT, 120V/60 Hz, 110V/50 Hz Secondary with 2 Primary and 1 Secondary Fuse
	C42	50 VA Extra Capacity CPT, 120V/60 Hz, 110V/50 Hz Secondary with 2 Primary and 1 Secondary Fuse
	C3	100 VA Extra Capacity CPT, 120V/60 Hz, 110V/50 Hz Secondary with 2 Primary and 1 Secondary Fuse
	C5 ③	200 VA Extra Capacity CPT, 120V/60 Hz, 110V/50 Hz Secondary with 2 Primary and 1 Secondary Fuse
	C7 ③	300 VA Extra Capacity CPT, 120V/60 Hz, 110V/50 Hz Secondary with 2 Primary and 1 Secondary Fuse
	C8 ③	400 VA Extra Capacity CPT, 120V/60 Hz, 110V/50 Hz Secondary with 2 Primary and 1 Secondary Fuse
Control Relay ④	C13	RUN Relay, 24V DC
Separate Control	C35	Wired for Separate Control
	C45	Separate Source Disc (Type 1/12 fusible only)
Customer Supplied	C36	Customer Supplied Components to Be Installed
	C37	Customer Supplied Wiring Diagram to Use
Bypass Contactors ③	C46/J1	Isolation Contactor
	C46/J2	Output Contactor
	C46/J3	Bypass Contactor ⑤
	C46/J4	Isolation/Output/Bypass Contactors ⑤
	C46/J5	3 Contactor Bypass Package — Includes CPT, Pilot Lights, Selector Switch, Auxiliary Contacts and Control Relay ⑤

③ Requires oversize enclosure.
④ Provides additional contacts for drive run indication.
⑤ Includes bimetallic overload.

Table 7-7. D — Device Labels, DIN Rail

Modification	Catalog Number Suffix	Description
Device Labels	D1	Device Labels — Specify
DIN Rail	D8	DIN Rail Installed

Table 7-8. E — Enclosure Modifications, Elapsed Time Meter

Modification	Catalog Number Suffix	Description
Enclosure	E3	Oversized Enclosure
Elapsed Time Meter	E9	Type 1, 3R, 12, 4X

Table 7-9. F — Fuse Clips, Fuse Blocks, EMI Filter

Modification	Catalog Number Suffix	Description
Fuse Blocks	**F4**	Power Fuses Included — Order by Description
	F5	30A Control Circuit Fuseholder (KTK) Mounted on Panel (unwired) Fuse Not Supplied
	F6	30A Control Circuit Fuseholder Mounted on Panel (unwired), 5A KTK Fuse Supplied
EMI Filter ②	**F22**	240V or 480V 3-Phase ①
	F23	240V 1-Phase ①

① The EMI filter is not necessary to meet the CE mark requirements for EMC when installing the MVX in an EC country.
② Requires oversized enclosure.

Table 7-10. H — Space Heater, Heater Packs Installed

Modification	Catalog Number Suffix	Description	
Space Heater	**H1**	Space Heater and Thermostat	
	H2	Space Heater and NC Interlock (100 Watt)	
Install Heater Packs (Freedom Series) ③	**H5**	**Class 20**	**Class 10**
		/D1 H2001B-3	/D25 H2101B-3
		/D2 H2002B-3	/D26 H2102B-3
		/D3 H2003B-3	/D27 H2103B-3
		/D4 H2004B-3	/D28 H2104B-3
		/D5 H2005B-3	/D29 H2105B-3
		/D6 H2006B-3	/D30 H2106B-3
		/D7 H2007B-3	/D31 H2107B-3
		/D8 H2008B-3	/D32 H2108B-3
		/D9 H2009B-3	/D33 H2109B-3
		/D10 H2010B-3	/D34 H2110B-3
		/D11 H2011B-3	/D35 H2111B-3
		/D12 H2012B-3	/D36 H2112B-3
		/D13 H2013B-3	/D37 H2113B-3
		/D14 H2014B-3	/D38 H2114B-3

③ Use only when C46 or R7 modifications are required.

Table 7-11. K — Keypad

Modification	Catalog Number Suffix	Description
Keypad	**K1**	Door-Mounted AFD Keypad (Type 1 and 12)
	K2	Door-Mounted AFD Keypad (Type 3R)
	K3	AFD Copy Keypad (mounted on drive)
	K4	Door-Mounted AFD Copy Keypad (Type 1 and 12)
	K5	Door-Mounted AFD Copy Keypad (Type 3R)

Table 7-12. L — Lightning Arrestor, Carton Label, Line Reactor, Load Reactor

Modification	Catalog Number Suffix	Description
Lightning Arrestor ④	**L1**	Lightning Arrestor
Label	**L10**	Carton Label — Customer Marking — Specify
Line Reactor (Type 1/12 design limited to either line or load reactor, not both)	**L12**	240V or 480V 3% Input Line Reactor, 3-Phase, Open Core and Coil ⑤
	L13	240V 3% Input Line Reactor, 1-Phase, Open Core and Coil ⑤
	L14	240V or 480V 5% Input Line Reactor, 3-Phase, Open Core and Coil ⑤
	L15	240V 5% Input Line Reactor, 1-Phase, Open Core and Coil ⑤
	L16	Line Reactor by Description
Output Line Filter (Type 1/12 design limited to either line or load reactor, not both)	**L17**	480V Output Line dv/dt Filter, Open Core and Coil ⑥
	L18	Load Reactor by Description

④ Requires oversized enclosure.
⑤ If the power source exceeds 500 kVA, 3% line unbalance, or if transient voltages from power factor capacitor switching events are present, an input line reactor must be used. The input line reactor will also reduce line current harmonics.
⑥ The output line dv/dt filter is required when the distance from the drive to the motor exceeds 33 feet (10.1m). The total cable run should not exceed 165 feet (50.3m).

Table 7-13. N — Nameplates

Modification	Catalog Number Suffix	Description
Nameplates	**N1**	Nameplate on Enclosure — Order Wording to Be Inscribed

Table 7-14. P — Pilot Lights, Pushbuttons, Phase Loss Relay, Phase Reversal Relay

Modification	Catalog Number Suffix	Description
Push-to-Test Pilot Lights	**P1**	Push-to-Test Pilot Light (Red RUN)
	P2	Push-to-Test Pilot Light (Green OFF)
	P3	Combination of **P1** and **P2** Above
	P4	Push-to-Test Pilot Light (Amber RUN)
	P54	Push-to-Test Pilot Light — Red BYPASS
	P55	Push-to-Test Pilot Light — Amber INVERTER ENABLE
	P56	Push-to-Test Pilot Light — Red INVERTER RUNNING
	P57	Push-to-Test Pilot Light — Green STOPPED
Pushbuttons	**P5**	EMERGENCY STOP — Mushroom Head
	P7	START/STOP
	P8	ON/OFF
	P9	START
	P10	ON
	P11	OFF
	P12	FORWARD/REVERSE/STOP
	P52	UP/STOP/DOWN
	P18	Pushbutton with Legend Plate (Order by Description)
Pilot Lights	**P19**	Amber Light "POWER AVAILABLE" Wired to Load Side of 2 Fuses or Circuit Breaker
	P20	Pilot Light (Amber) Wired to Coil
	P23	Pilot Light — Red RUN
	P24	Pilot Light — Red ON
	P25	Pilot Light — Green OFF
	P58	Pilot Light — Red BYPASS
	P59	Pilot Light — Amber INVERTER ENABLE
	P60	Pilot Light — Red INVERTER RUNNING
	P61	Pilot Light — Green STOP
	P26	Pilot Light (Order by Description)
Illuminated Pushbutton	**P27**	Illuminated Pushbutton (Order by Description)
Phase Loss Relay	**P28**	Phase Loss Relay
Phase Reversal Relay	**P30**	Phase Reversal Relay
Phase Unbalance Relay	**P32**	Phase Unbalance Relay
Phase Monitoring Relay	**P34**	Phase Monitoring Relay

Table 7-15. R — Relays, Overload Relay Modifications, DeviceNet™ Interface Mode

Modification	Catalog Number Suffix	Description
Relay	**R2**	Overvoltage Relay
	R7	Overload Relay (Order by Description)
Relay Modifications	**R45**	Auto Reset Only on Overload Relay
DeviceNet Interface Module	**R69**	DeviceNet Communication Interface

Table 7-16. S — Selector Switches, Suppressor, Surge Capacitor, Speed Pot

Modification	Catalog Number Suffix	Description
Selector Switches	**S3**	HAND-OFF-AUTO Selector Switch
	S10	OFF-AUTO Selector Switch
	S11	START-STOP Selector Switch
	S12	ON-OFF Selector Switch
	S16	FORWARD-REVERSE Selector Switch
	S38	INVERTER-OFF-BYPASS Selector Switch
	S40	Selector Switch (Order by Description)
Surge Capacitor	**S37**	Surge Capacitor Wired to Disconnect Line Side
Speed Pot	**S39**	Speed Potentiometer

Table 7-17. T — Timers, Terminal Blocks, Terminal Points, Ring Lug

Modification	Catalog Number Suffix	Description
Timers	**T3**	Pneumatic Timer Mounted in Enclosure, Unwired, 180 Seconds Maximum
	T4	Pneumatic Timer (Order by Description)
	T5	Solid-State Timer (Order by Description)
Terminal Blocks	**T9**	With 1 Single-Circuit Terminal Block, Unwired
	T10	With 2 Single-Circuit Terminal Blocks, Unwired
Terminal Points	**T11**	With 6 Terminal Points, Unwired
	T12	With 12 Terminal Points, Unwired
	T13	With 16 Terminal Points, Unwired
	T14	Terminal Point per Customer Specification, Unwired
	T15	Terminal Point per Customer Specification, Wired
Ring Lug	**T16**	Ring Lug Connections on Power Wires
	T17	Ring Lug Connections on Control Wires

Table 7-18. U — Undervoltage Relay

Modification	Catalog Number Suffix	Description
Undervoltage Relay	**U2**	Undervoltage Relay, Non-adjustable
Under and Over Relay	**U7**	Under and Overvoltage Relay

Table 7-19. W — Wiremarkers

Modification	Catalog Number Suffix	Description
Wiremarkers	**W7**	Wiremarkers

Product Selection

Table 7-20. Class ECS80 — Non-combination MVX9000 Drives

Volts	Input Amp. Single-/ 3-Phase Rating	Continuous Output Amp. Rating	Type 1 General Purpose	Type 3R Rainproof	Type 4X ① Watertight Stainless Steel	Type 12 Industrial Dust-Tight	Component Microdrive (Open)
			Catalog Number	Catalog Number	Catalog Number	Catalog Number	Catalog Number
1/2 hp							
208 – 240	5.8/3.4	2.5	ECS80B1BAA	ECS80B2BAA	ECS80B4BAA	ECS80B8BAA	MVXF50A0-2
1 hp							
208 – 240	9/5.2	5	ECS80C1BAA	ECS80C2BAA	ECS80C4BAA	ECS80C8BAA	MVX001A0-2
380 – 480	—/3.3	3	ECS80C1CAA	ECS80C2CAA	ECS80C4CAA	ECS80C8CAA	MVX001A0-4
500 – 600	—/2.4	1.7	ECS80C1DAA	ECS80C2DAA	ECS80C4DAA	ECS80C8DAA	MVX001A0-5
2 hp							
208 – 240	16/9.3	7	ECS80D1BAA	ECS80D2BAA	ECS80D4BAA	ECS80D8BAA	MVX002A0-2
380 – 480	—/5	4	ECS80D1CAA	ECS80D2CAA	ECS80D4CAA	ECS80D8CAA	MVX002A0-4
500 – 600	—/4.2	3	ECS80D1DAA	ECS80D2DAA	ECS80D4DAA	ECS80D8DAA	MVX002A0-5
3 hp							
208 – 240	22.5/13	10	ECS80E1BAA	ECS80E2BAA	ECS80E4BAA	ECS80E8BAA	MVX003A0-2
380 – 480	—/7	5	ECS80E1CAA	ECS80E2CAA	ECS80E4CAA	ECS80E8CAA	MVX003A0-4
500 – 600	—/5.9	4.2	ECS80E1DAA	ECS80E2DAA	ECS80E4DAA	ECS80E8DAA	MVX003A0-5
5 hp							
208 – 240	—/20	17	ECS80F1BAA	ECS80F2BAA	ECS80F4BAA	ECS80F8BAA	MVX005A0-2
380 – 480	—/11	8.2	ECS80F1CAA	ECS80F2CAA	ECS80F4CAA	ECS80F8CAA	MVX005A0-4
500 – 600	—/7.0	6.6	ECS80F1DAA	ECS80F2DAA	ECS80F4DAA	ECS80F8DAA	MVX005A0-5
7-1/2 hp							
208 – 240	—/31	25	ECS80G1BAA	ECS80G2BAA	ECS80G4BAA	ECS80G8BAA	MVX007A0-2
380 – 480	—/17	13	ECS80G1CAA	ECS80G2CAA	ECS80G4CAA	ECS80G8CAA	MVX007A0-4
500 – 600	—/10.5	9.9	ECS80G1DAA	ECS80G2DAA	ECS80G4DAA	ECS80G8DAA	MVX007A0-5
10 hp							
380 – 480	—/21	18	ECS80H1CAA	ECS80H2CAA	ECS80H4CAA	ECS80H8CAA	MVX010A0-4
500 – 600	—/12.9	12.2	ECS80H1DAA	ECS80H2DAA	ECS80H4DAA	ECS80H8DAA	MVX010A0-5

① These are the Catalog Numbers for Type 4X 304-Grade Stainless Steel, as indicated by the seventh digit **4**. Example: ECS80B**4**BAA-C1. To order Type 4X 316-Grade Stainless Steel, change that digit to **9**. To order Type 4 Painted Steel, change that digit to **3**. To order Nonmetallic, change that digit to **5**. For details on these Alternate Enclosures, see **Tab 14**.

Cover Controls . . . . . **Page 7-5**
Modifications . . . . . **Pages 7-6 – 7-8**
Dimensions. . . . . **Page 15-8**

Table 7-21. Class ECS81 — Combination Disconnect Switch MVX9000 Drives

Volts	Input Amp. Single-/ 3-Phase Rating	Continuous Output Amp. Rating	Fuse Clips	Type 1 General Purpose	Type 3R Rainproof	Type 4X ① Watertight Stainless Steel	Type 12 Industrial Dust-Tight	Component Microdrive (Open)
				Catalog Number	Catalog Number	Catalog Number	Catalog Number	Catalog Number
1/2 hp								
208 – 240	5.8/3.4	2.6	30A	ECS81B1BAC	ECS81B2BAC	ECS81B4BAC	ECS81B8BAC	MVXF50A0-2
1 hp								
208 – 240	9/5.2	4	30A	ECS81C1BAC	ECS81C2BAC	ECS81C4BAC	ECS81C8BAC	MVX001A0-2
380 – 480	—/3.3	2.5	30A	ECS81C1CAC	ECS81C2CAC	ECS81C4CAC	ECS81C8CAC	MVX001A0-4
500 – 600	—/2.4	1.7	30A	ECS81C1DAC	ECS81C2DAC	ECS81C4DAC	ECS81C8DAC	MVX001A0-5
2 hp								
208 – 240	16/9.3	7.1	30A	ECS81D1BAC	ECS81D2BAC	ECS81D4BAC	ECS81D8BAC	MVX002A0-2
380 – 480	—/5	3.8	30A	ECS81D1CAC	ECS81D2CAC	ECS81D4CAC	ECS81D8CAC	MVX002A0-4
500 – 600	—/4.2	3	30A	ECS81D1DAC	ECS81D2DAC	ECS81D4DAC	ECS81D8DAC	MVX002A0-5
3 hp								
208 – 240	22.5/13	10	30A	ECS81E1BAC	ECS81E2BAC	ECS81E4BAC	ECS81E8BAC	MVX003A0-2
380 – 480	—/7	5.5	30A	ECS81E1CAC	ECS81E2CAC	ECS81E4CAC	ECS81E8CAC	MVX003A0-4
500 – 600	—/5.9	4.2	30A	ECS81E1DAC	ECS81E2DAC	ECS81E4DAC	ECS81E8DAC	MVX003A0-5
5 hp								
208 – 240	—/20	15.9	30A	ECS81F1BAC	ECS81F2BAC	ECS81F4BAC	ECS81F8BAC	MVX005A0-2
380 – 480	—/11	8.6	30A	ECS81F1CAC	ECS81F2CAC	ECS81F4CAC	ECS81F8CAC	MVX005A0-4
500 – 600	—/7.0	6.6	30A	ECS81F1DAC	ECS81F2DAC	ECS81F4DAC	ECS81F8DAC	MVX005A0-5
7-1/2 hp								
208 – 240	—/31	24	60A	ECS81G1BAE	ECS81G2BAE	ECS81G4BAE	ECS81G8BAE	MVX007A0-2
380 – 480	—/17	13	30A	ECS81G1CAC	ECS81G2CAC	ECS81G4CAC	ECS81G8CAC	MVX007A0-4
500 – 600	—/10.5	9.9	30A	ECS81G1DAC	ECS81G2DAC	ECS81G4DAC	ECS81G8DAC	MVX007A0-5
10 hp								
380 – 480	—/21	16	30A	ECS81H1CAC	ECS81H2CAC	ECS81H4CAC	ECS81H8CAC	MVX010A0-4
500 – 600	—/12.9	12.2	30A	ECS81H1DAC	ECS81H2DAC	ECS81H4DAC	ECS81H8DAC	MVX010A0-5

① These are the Catalog Numbers for Type 4X 304-Grade Stainless Steel, as indicated by the seventh digit **4**. Example: ECS81B**4**BAC-C1. To order Type 4X 316-Grade Stainless Steel, change that digit to **9**. To order Type 4 Painted Steel, change that digit to **3**. To order Nonmetallic, change that digit to **5**. For details on these Alternate Enclosures, see **Tab 14**.

Type 3R Combination HMCPE MVX Drive

Type 1 MXV Drive with Disconnect Switch and Bypass

Cover Controls . . . . . **Page 7-5**
Modifications . . . . . **Pages 7-6 – 7-8**
Dimensions . . . . . **Page 15-8**

Table 7-22. Class ECS82 — Combination HMCPE Circuit Breaker MVX9000 Drives

Volts	Input Amp. Single-/ 3-Phase Rating	Continuous Output Amp. Rating	HMCP Rating Amps.	Type 1 General Purpose	Type 3R Rainproof	Type 4X ① Watertight Stainless Steel	Type 12 Industrial Dust-Tight	Component Microdrive (Open)
				Catalog Number	Catalog Number	Catalog Number	Catalog Number	Catalog Number
1/2 hp								
208 – 240	5.8/3.4	2.6	15	ECS82B1BAA	ECS82B2BAA	ECS82B4BAA	ECS82B8BAA	MVXF50A0-2
1 hp								
208 – 240	9/5.2	4	15	ECS82C1BAA	ECS82C2BAA	ECS82C4BAA	ECS82C8BAA	MVX001A0-2
380 – 480	—/3.3	2.5	15	ECS82C1CAA	ECS82C2CAA	ECS82C4CAA	ECS82C8CAA	MVX001A0-4
500 – 600	—/2.4	1.7	15	ECS82C1DAA	ECS82C2DAA	ECS82C4DAA	ECS82C8DAA	MVX001A0-5
2 hp								
208 – 240	16/9.3	7.1	15	ECS82D1BAA	ECS82D2BAA	ECS82D4BAA	ECS82D8BAA	MVX002A0-2
380 – 480	—/5	3.8	15	ECS82D1CAA	ECS82D2CAA	ECS82D4CAA	ECS82D8CAA	MVX002A0-4
500 – 600	—/4.2	3	15	ECS82D1DAA	ECS82D2DAA	ECS82D4DAA	ECS82D8DAA	MVX002A0-5
3 hp								
208 – 240	22.5/13	10	30	ECS82E1BAD	ECS82E2BAD	ECS82E4BAD	ECS82E8BAD	MVX003A0-2
380 – 480	—/7	5.5	15	ECS82E1CAA	ECS82E2CAA	ECS82E4CAA	ECS82E8CAA	MVX003A0-4
500 – 600	—/5.9	4.2	15	ECS82E1DAA	ECS82E2DAA	ECS82E4DAA	ECS82E8DAA	MVX003A0-5
5 hp								
208 – 240	—/20	15.9	30	ECS82F1BAD	ECS82F2BAD	ECS82F4BAD	ECS82F8BAD	MVX005A0-2
380 – 480	—/11	8.6	15	ECS82F1CAA	ECS82F2CAA	ECS82F4CAA	ECS82F8CAA	MVX005A0-4
500 – 600	—/7.0	6.6	15	ECS82F1DAA	ECS82F2DAA	ECS82F4DAA	ECS82F8DAA	MVX005A0-5
7-1/2 hp								
208 – 240	—/31	24	50	ECS82G1BAF	ECS82G2BAF	ECS82G4BAF	ECS82G8BAF	MVX007A0-2
380 – 480	—/17	13	30	ECS82G1CAD	ECS82G2CAD	ECS82G4CAD	ECS82G8CAD	MVX007A0-4
500 – 600	—/10.5	9.9	15	ECS82G1DAA	ECS82G2DAA	ECS82G4DAA	ECS82G8DAA	MVX007A0-5
10 hp								
380 – 480	—/21	16	30	ECS82H1CAD	ECS82H2CAD	ECS82H4CAD	ECS82H8CAD	MVX010A0-4
500 – 600	—/12.9	12.2	30	ECS82H1DAD	ECS82H2DAD	ECS82H4DAD	ECS82H8DAD	MVX010A0-5

① These are the Catalog Numbers for Type 4X 304-Grade Stainless Steel, as indicated by the seventh digit **4**. Example: ECS82B4BAA-C1. To order Type 4X 316-Grade Stainless Steel, change that digit to **9**. To order Type 4 Painted Steel, change that digit to **3**. To order Nonmetallic, change that digit to **5**. For details on these Alternate Enclosures, see **Tab 14**.

Type 3R Combination HMCPE MVX Drive

Type 1 MXV Drive with Disconnect Switch and Bypass

Cover Controls . . . . . **Page 7-5**
Modifications. . . . . **Pages 7-6 – 7-8**
Dimensions. . . . . **Page 15-8**

Wiring Diagrams

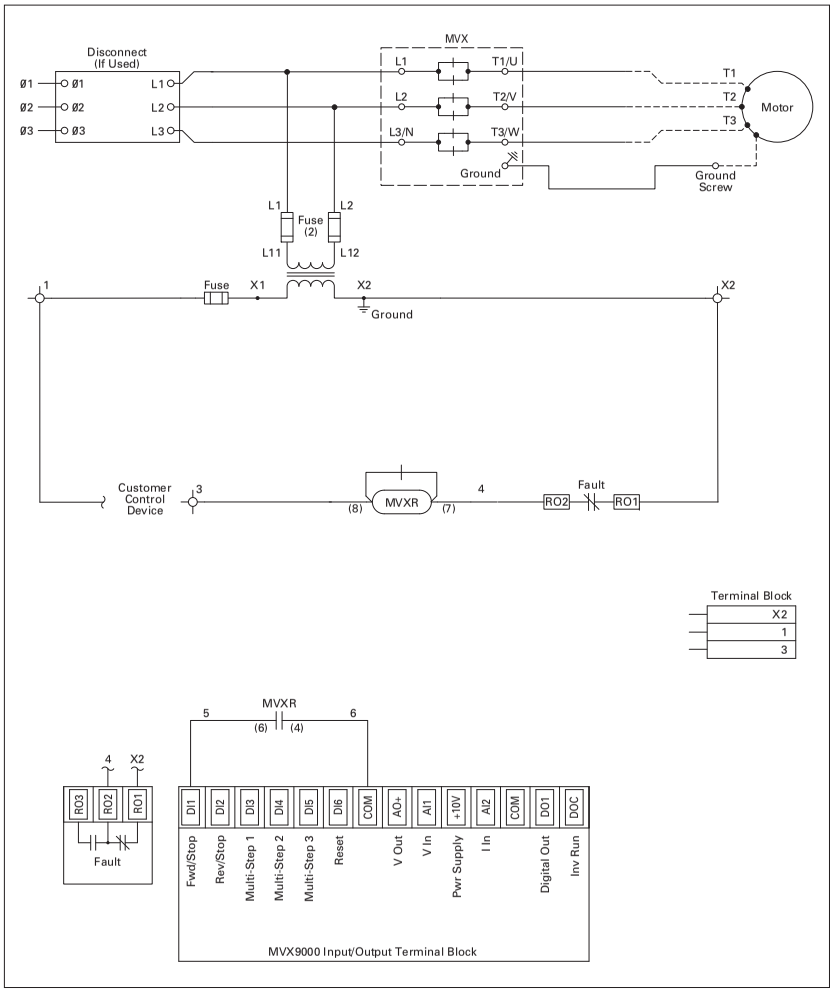

Figure 7-1. MVX9000 Wiring Diagram

Pump Panels

Contents

Description — *Page*

Type 3R Enclosure
- **Product Family Overview**
  - Product Description 8-2
  - Accessories 8-4
  - Catalog Number Selection 8-5
- ***IT.* — Fusible Disconnect**
  - Product Description and Selection 8-6
- ***IT.* — Circuit Breaker**
  - Product Description and Selection 8-7
- **Freedom — Fusible Disconnect**
  - Product Description 8-8
  - Product Selection 8-9
- **Freedom — Circuit Breaker**
  - Product Description and Selection 8-10
- **A200 Vacuum — Fusible Disconnect**
  - Product Description and Selection 8-11
- **A200 Vacuum — Circuit Breaker**
  - Product Description and Selection 8-12

Type 3R Vacuum Enclosure
- **Freedom — Fusible Disconnect and Circuit Breaker**
  - Product Description and Selection 8-13

Irrigation
- **Product Family Overview**
  - Product Description 8-14
  - Catalog Number Selection 8-14
- **Pump Panels — Interchangeable Heater Overload**
  - Product Selection 8-15
- **Pump Panels — Solid-State Overload**
  - Product Selection 8-16

Duplex Pump Panels
- **Product Family Overview**
  - Catalog Number Selection 8-17
  - Cover Control 8-18
- **Non-combination**
  - Product Selection 8-19
- **Combination**
  - Product Selection 8-20

8

8

Product Description

Eaton's Cutler-Hammer® Pump Controllers are combination starters with accessories and modifications designed to meet the particular requirements of the irrigation, oil well, gas and other pump application industries. The enclosure is Type 3R to provide weather-tight protection and is available in several sizes, depending on the customer's control option requirements. The disconnect, contactor and overload relay are the same as used in Freedom and ***IT.*** Lines of combination starters. These controllers are available in standard full voltage as well as reduced voltage configurations, with vacuum contactors as well as the standard electromechanical contactors.

Eaton's revolutionary design for soft starters is shown in the S752, S801 and S811 soft starter products which are members of the Cutler-Hammer® Intelligent Technologies (***IT.***) family of products. These Reduced Voltage Soft Starters are the most compact, multi-functional, easy-to-install products on the market. Their superiority begins with the control package, which features 24V DC control, onboard Digital Signal Processor (DSP), and use of a low impedance run contactor, all of which contribute to the ***IT.*** Soft Starter's safety, advanced functionality and compact size.

Type 3R Standard Enclosure with Size 4 IT. Starter

Type 3R Standard Enclosure with Size 1 – 3 Starter

Type 3R Narrow Enclosure with Size 1, 2 Starter

Type 3R Narrow Enclosure with Size 1 Starter and Electronic Overload

Type 3R Standard Enclosure with a Size 3 Part Winding Starter

Features

The *IT.* and Freedom Series starters are available in either fusible or circuit breaker types utilizing Type 3R Rainproof and Sleet Resistant enclosures. Convenient straight-through wiring with top line connections and bottom load connections features easily accessible pressure connections for line, load and control. Starter and disconnect are factory wired.

- **Motor Circuit Switch** — Long life, heavy-duty, quick acting, double break action. Positive ON and positive OFF available in either fusible or non-fusible versions. Fuse clip kits are available for field installation and can be converted in the field for maximum job flexibility.
- **Motor Circuit Protector** — Similar to a magnetic trip only circuit breaker. Features an adjustable magnetic trip characteristic for accurate, dependable fault protection and simultaneous trip of all poles to prevent single phasing.
- **Overload Relay**
  - Freedom overload relays with trip indication feature bimetallic type operation with ambient compensation and a choice of either manual or automatic reset.
  - The *IT.* electronic overload relay offers motor protection and can be adjusted over a range of 3.2:1 in Class 10, 20 or 30 with a choice of manual or automatic reset. Settings such as Trip Class, phase loss/phase current unbalance enabled or disabled can be programmed without the use of any software. Fault indication is provided for thermal memory, overload trip, phase loss/phase current unbalance, ready for reset and other parameters.
- **HAND/OFF/AUTO Selector Switch and START Pushbutton** — 10250T heavy-duty units mounted on the flange of the enclosure for outside accessibility. START pushbutton not used as standard on NEMA *IT.* pumps, but available as an option.
- **RESET Button** — Accessible from front of enclosure (booted for environmental protection) for operation of overload relay reset function.
- **Enclosure** — Type 3R Rainproof and Sleet Resistant construction with stainless steel door latches and special corrosion resistant paint. Enclosure features include grounding lugs, padlocking feature on door latch, drip hood over door and provisions for top mounting conduit hubs. Most enclosures include generous panel space for mounting optional control and accessories.
- **Mounting** — Pole mounting feet with keyhole slots for easy mounting are standard on enclosures for Sizes 1 – 5 (removable for Sizes 1 – 5 standard width flange type enclosures). Brackets can be formed to the contour of the pole after mounting.
- **Padlocking** — Provision on door latch for locking door closed, as well as provision for padlocking disconnect switch in OFF position. With a simple modification, disconnect can also be padlocked in ON position.
- **UL Listed** — Underwriters Laboratories Inc. includes the "Suitable for Use as Service Equipment" label.

Interrupting Ratings

- **Fusible** — Sizes 1 – 5 suitable for use on a circuit capable of delivering not more than 100,000 rms symmetrical amperes. 600V maximum where a Class R fuse clip kit is properly installed and Class R fuses are used. If Class R fuses are not used, the switch should not be installed on circuits capable of delivering more than 10,000 rms symmetrical amperes. Size 6 is limited to 18,000 and Size 7 is limited to 30,000 rms symmetrical amperes.
- **Circuit Breaker HMCPE** — Sizes 1 – 3 controllers are suitable for use on circuits capable of delivering not more than 100,000 rms symmetrical amperes at 480V maximum; for 600V applications not more than 65,000 rms symmetrical amperes.
- **ECP Irrigation Pump Panel** — Suitable for use on circuits capable of delivering not more than 10,000 rms symmetrical amperes at 480V maximum.

Optional Features

- **Backspin Timer** — .2 seconds to 3 minutes. Prevents restart until motor and pump have stopped.
- **Program Timer** — 24 hour, 7 day with day omission.
- **Control Transformer** — Available as standard, either as a field kit or factory installed. Includes 2 primary and 1 secondary fuses.
- **Electrical Interlocks** — Side mounted in NO, NC and NO-NC. Maximum of 2 contacts on either side of starter through Size 2, maximum of 3 per side Sizes 3 – 5.
- **Control Circuit Fuse Kit** — 30A, 600V rating.
- **Lightning Arrestor** — Offers protection to control from lightning induced surges.
- **"R" Fuse Clip Kits** — 30 – 200A, 250V and 600V ratings.
- **Disconnect Control Circuit Interlock** — To disconnect separate control circuits.
- **Enclosure Conduit Hubs** — Hole provided in enclosure top covered with hole closer. Will accept 3/4", 1-1/4", 1-1/2", 2", 2-1/2" and 3" conduit sizes.
- **Pad Mounting Feet** — For standard width enclosures Sizes 1 – 5.
- **Electronic Overload (SSOL)**
- **304-Grade Stainless Steel Enclosure** — For additional corrosion resistance, any of the pump panels can be ordered as 304-Grade Stainless Steel, still keeping the Type 3R Rating.
- **Soft Starter Pump Control Options**
  - Designed to reduce "water-hammer" during start-up and stopping sequences
  - Stop ramp extended to 60 seconds to help control larger motors and systems with long piping runs

Standards and Certifications

Note: See **Page 18-2** for additional information on Standards and Certifications that apply to all Cutler-Hammer Enclosed Control products.

- UL Listed
- cUL Listed (indicates appropriate CSA Standard investigation)
- ABS Type Approval

Accessories

Kits

Table 8-1. Kits for Field Mounting

Description	Catalog Number Suffix	Catalog Number
Backspin Timer — .2 sec. to 3 min. (60 Hz)	**B12**	—
Control Transformers 240/480V Pri., 120V Sec.		
Size 1	**C1**	—
Size 2	**C1**	—
Size 3	**C1**	—
Size 4	**C1**	—
Size 5	**C1**	—
Lightning Arrestor	**L3**	—
Control Circuit Fuse Kit (600V)	**C31**	—
Electrical Interlocks — Freedom Line/Vacuum		
NO	**A27**	—
NC	**A28**	**C320KGS2**
NO & NC	**A29**	**C320KGS3**
Time Delay Relay — 3 minutes		
ON Delay (unwired)	**T6**	—
OFF Delay (unwired)	**T7**	—
24-Hour Programming Clock	**P44**	—
Interchangeable Hubs for Enclosure. ① Enclosure has removable top plate. If conduit hub is required, order:		
3/4" Conduit Size	—	**DS075H1**
1-1/4" Conduit Size	—	**DS125H1**
1-1/2" Conduit Size	—	**DS150H1**
2" Conduit Size	—	**DS200H1**
2-1/2" Conduit Size	—	**DS250H2**
3" Conduit Size	—	**DS300H2**
Power Supply	**C34**	—

① Does not apply to reduced voltage controllers.

Overload Relays

Table 8-2. Freedom SSOL Overload Relays

NEMA Size	Full Load Current Adjustment Range (A)	3-Phase Manual Reset Overload		3-Phase Automatic/ Manual Reset
		Class 10	Class 20	Class 20
Catalog Number Suffix ➡		**R52**	**R50**	**R51**
00	0.1 – 1.3	G101	G81	G121
	0.3 – 1.0	G102	G82	G122
	1.0 – 2.9	G103	G83	G123
	1.6 – 5.0	G104	G84	G124
	3.7 – 12	G105	G85	G125
0 & 1	0.1 – 1.3	G101	G81	G121
	0.3 – 1.0	G102	G82	G122
	1.0 – 2.9	G103	G83	G123
	1.6 – 5.0	G104	G84	G124
	3.7 – 12	G105	G85	G125
	12 – 32	G106	G86	G126
2	12 – 37	G107	G87	G127
	14 – 45	G108	G88	G128
3	26 – 85	G109	G89	G129
4	57 – 180	G112	G92	G132
5	96 – 300	G104	G84	G124
6	192 – 600	G104	G84	G124

Example: **R50/G87** = Class 20, 12 – 37 ampere overload for Size 2 starters.

Catalog Number Selection

Table 8-3. Pump Panel Catalog Number Selection

E C N 5 4 1 2 B A A -

Design

N = Freedom	
T = ***IT.***	
2 = A200	
V = Vacuum	

Class

54 = Type 3R Pump Panel with Disconnect	
55 = Type 3R Pump Panel with HMCP	
64 = Part Winding with Motor Circuit	
65 = Part Winding with Circuit Breaker	
68 = Duplex, Non-combination ③	
69 = Duplex, with Disconnect Switch ③	
70 = Duplex, with HMCP/E ③	

NEMA Size

1 = Size 1	
2 = Size 2	
3 = Size 3	
4 = Size 4	
5 = Size 5	
6 = Size 6	
7 = Size 7	

Enclosure

2 = 3R Painted Steel	
A = 3R Stainless Steel	

Voltage ①

A = 120V/60 or 110/50	
B = 240V/60 or 220/50	
C = 460V/60 or 440/50	

Cover Control ④

A = None	

Disconnect Fuse Clip Ratings

A = None	**H** = 200A/250V R
B = 30A/250V R	**J** = 200A/600V R
C = 30A/600V R	**K** = 400A/250V R
D = 60A/250V R	**L** = 400A/600V R
E = 60A/600V R	**M** = 600A/250V R
F = 100A/250V R	**N** = 600A/600V R
G = 100A/600V R	**Q** = 1200A/600V L

HMCP or Breaker Ratings

B = 3 Amp	**M** = 800 Amp
C = 7 Amp	**N** = 1000 Amp
D = 15 Amp	**P** = 1200 Amp
E = 30 Amp	**Q** = 2000 Amp
F = 50 Amp	**R** = 3000 Amp
G = 100 Amp	**U** = ②
H = 150 Amp	**W** = 70 Amp
J = 250 Amp	**X** = 100 Amp
K = 400 Amp	**Y** = 150 Amp
L = 600 Amp	

Modification Code

① For other voltages and single-phase applications, consult your Eaton salesperson.
② Engineering determination depending on size, horsepower FLA, NEC or other considerations.
③ More information on Type 1, 3R, 4X and 12 Duplex Pump Panels is on **Page 8-17**. Product Selection is on **Page 8-19**.
④ HOA selector switch and START pushbutton provided as standard, except for ***IT.*** where HOA selector switch is provided as standard.

Product Description

- Solid-State OL Relay
- Suitable for Franklin Motors

Standard ECT54 controllers have a HAND/OFF/AUTO selector switch on the enclosure and are wired as illustrated in **Figure 8-1**. All controllers come with DC power supply.

Note: Stainless Steel enclosure may be ordered by changing the seventh digit to **A**. Type 3R Rating will still apply.

Note: Type 3R enclosure does not include top conduit hubs. Hubs are available in kit form — see **Page 8-4**.

Note: If branch circuit protective device is 45A or greater, C320FBR1 fuse kit (panel mounted) may be required for control circuit protection per NEC 430-72.

Wiring Diagram

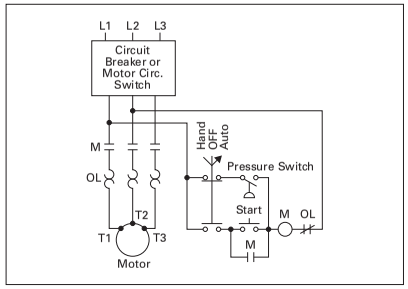

Figure 8-1. Typical Wiring Diagram

Product Selection

Table 8-4. Class ECT54 — Combination Pump Panel — Fusible Disconnect

Motor Voltage ①	Max. hp 50/60 Hz	NEMA Size	Fuse Clip Rating		Narrow Width ②	Standard Width ②
			Amperes	Volts	Catalog Number	Catalog Number
230 460 —	7-1/2 10 —	1	30 30 Not Installed	250 600 Not Installed	**ECT5412BAB-E14** **ECT5412CAC-E14** **ECT5412CAA-E14**	**ECT5412BAB** **ECT5412CAC** **ECT5412CAA**
230 460 —	15 25 —	2	60 60 Not Installed	250 600 Not Installed	**ECT5422BAD-E14** **ECT5422CAE-E14** **ECT5422CAA-E14**	**ECT5422BAD** **ECT5422CAE** **ECT5422CAA**
230 460 —	30 50 —	3	100 100 Not Installed	250 600 Not Installed	**—** **—** **—**	**ECT5432BAF** **ECT5432CAG** **ECT5432CAA**
230 460 —	50 100 —	4	200 200 Not Installed	250 600 Not Installed	**—** **—** **—**	**ECT5442BAH** **ECT5442CAJ** **ECT5442CAA**
230 460	100 200	5	400 400	250 600	**—** **—**	**ECT5452BAK** **ECT5452CAL**
230 460	200 400	6	600 600	250 600	**—** **—**	**ECT5462BAM** **ECT5462CAN**

① Dual element fuse ratings.
② Add modification code **C34** for Control Power Transformer.

Table 8-5. Solid-State Overload Range Codes

FLA Range	Size						
	00	0	1	2	3	4	5
.25 – .80	**A**	**A**	**A**	—	—	—	—
.59 – 1.9	**B**	**B**	**B**	—	—	—	—
1.4 – 4.4	**C**	**C**	**C**	—	—	—	—
2.8 – 9.0	**D**	**D**	**D**	—	—	—	—
5.0 – 16	—	—	**F**	—	—	—	—
6.3 – 20	—	**G**	—	—	—	—	—
8.4 – 27	—	—	**H**	—	—	—	—
10 – 32	—	**J**	—	—	—	—	—
14 – 45	—	—	—	**K**	—	—	—
16 – 50	—	—	**L**	—	—	—	—
28 – 90	—	—	—	—	**M**	—	—
31 – 100	—	—	—	**N**	—	—	—
42 – 135	—	—	—	—	—	**P**	—
63 – 200	—	—	—	—	—	**R**	—
84 – 270	—	—	—	—	—	—	**S**
131 – 420	—	—	—	—	—	—	**T**

Kits ..... **Page 8-4**
Panel Space ..... **Page 8-7**
Dimensions ..... **Page 15-9**
Modifications ..... **Page 16-40**

Product Description

- Solid-State OL Relay
- Suitable for Franklin Motors

Standard ECT55 controllers have a HAND/OFF/AUTO selector switch on the enclosure and are wired as illustrated in **Figure 8-3**. Controllers provided with 24V DC as standard.

Note: Type 3R enclosure does not include top conduit hubs. Hubs are available in kit form — see **Page 8-4**.

Note: If branch circuit protective device is 45A or greater, C320FBR1 fuse kit (panel mounted) may be required for control circuit protection per NEC 430-72.

Note: Stainless Steel enclosure may be ordered by changing the seventh digit to **A**. Type 3R Rating will still apply.

Dimensions

Table 8-6. Panel Space

Panel Size	NEMA Size	Position (see Figure 8-2)	Approximate Dimensions in Inches (mm) Width W	Height H
Narrow ①	1 – 2	—	5.5 (140)	6.0 (152)
Standard	1 – 3	—	8.5 (216)	26.0 (660)
	4	—	8.5 (216)	39.0 (991)
	5	A	10.0 (254)	22.0 (559)
		B	15.0 (381)	12.0 (305)
Oversize	1 – 2	—	12.0 (318)	39.0 (991)
	3	—	11.0 (279)	39.0 (991)

① Space is between disconnect switch or circuit breaker and starter.

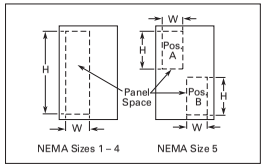

Figure 8-2. Panel Space

Product Selection

Table 8-7. Class ECT55 — Combination Pump Panel — Circuit Breaker

Motor Voltage	Max. hp 50/60 Hz	NEMA Size	Circuit Breaker Type	Narrow Width ① Catalog Number	Standard Width ① Catalog Number
230	1	1	HMCPE 7A	**ECT5512BAC-E14**	**ECT5512BAC**
	2		HMCPE 15A	**ECT5512BAD-E14**	**ECT5512BAD**
	7-1/2		HMCPE 30A	**ECT5512BAE-E14**	**ECT5512BAE**
460	3/4		HMCPE 3A	**ECT5512CAB-E14**	**ECT5512CAB**
	2		HMCPE 7A	**ECT5512CAC-E14**	**ECT5512CAC**
	5		HMCPE 15A	**ECT5512CAD-E14**	**ECT5512CAD**
	10		HMCPE 30A	**ECT5512CAE-E14**	**ECT5512CAE**
230	15	2	HMCPE 50A	**ECT5522BAF-E14**	**ECT5522BAF**
460	25		HMCPE 50A	**ECT5522CAF-E14**	**ECT5522CAF**
230	30	3	HMCPE 100A	—	**ECT5532BAG**
460	50		HMCPE 100A	—	**ECT5532CAG**
230	50	4	HMCP 150A	—	**ECT5542BAH**
460	100		HMCP 150A	—	**ECT5542CAH**
230	75	5	HMCP 250A	—	**ECT5552BAJ**
230	100		HMCP 400A	—	**ECT5552BAK**
460	150		HMCP 250A	—	**ECT5552CAJ**
460	200		HMCP 400A	—	**ECT5552CAK**
230	125	6	HMCP 600A	—	**ECT5562BAL**
230	200		MD 800A	—	**ECT5562BAM**
460	300		HMCP 600A	—	**ECT5562CAL**
460	400		MD 800A	—	**ECT5562CAM**

① Add modification code **C34** for Control Power Transformer.
Note: For Solid-State Overload Range Codes, See **Table 8-5** on **Page 8-6**.

Wiring Diagram

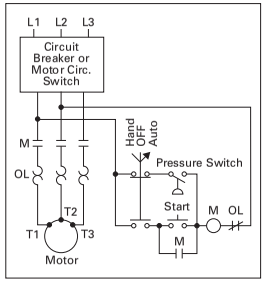

Figure 8-3. Typical Wiring Diagram

Kits ..... **Page 8-4**
Dimensions..... **Page 15-9**
Modifications..... **Page 16-40**

Narrow Width Size 2 Type 3R

Product Description

- 3-Phase Magnetic
- Interchangeable Heater OLR

Standard ECN54 controllers have a HAND/OFF/AUTO selector switch and START and RESET pushbuttons mounted on the enclosure and are wired as illustrated in **Figure 8-4**.

Note: Type 3R enclosure does not include top conduit hubs. Hubs are available in kit form — see **Page 8-4**.

Note: If branch circuit protective device is 45A or greater, C320FBR1 fuse kit (panel mounted) may be required for control circuit protection per NEC 430-72.

Note: Stainless Steel enclosure may be ordered by changing the seventh digit to **A**. Type 3R Rating will still apply.

Accessories

Table 8-8. C351 — Fuse Clip Selection — 3-Pole (3 Fuses)

NEMA Size	Motor Voltage	Fuse Clip Rating Amperes	Fuse Clip Rating Volts	Fuse Clip Kit for Field Installation in Non-fusible Starter: For Non-rejection Type Fuses Catalog Number	For use with "R" Rejection Type Fuses Catalog Number
1	200/230	30	250	**C351KC21**	**C351KC21R**
	460 – 575	30	600	**C351KD22-61**	**C351KD22-61R**
2	200	60	250	**C351KD22-61**	**C351KD22-61R**
	230	60	250	**C351KD22-61**	**C351KD22-61R**
	460 – 575	60	600	**C351KD62**	**C351KD62R**
3	200	100	250	**C351KE23-63**	**C351KE23-63** ①
	230	100	250	**C351KE23-63**	**C351KE23-63** ①
	460 – 575	100	600	**C351KE23-63**	**C351KE23-63** ①
4	200	200	250	**C351KF24-64**	**C351KF24-64** ①
	230	200	250	**C351KF24-64**	**C351KF24-64** ①
	460 – 575	200	600	**C351KF24-64**	**C351KF24-64** ①

① Fuse clip "R" rejection members for use with Class R fuses are supplied loose both in Fuse Clip Kits and when fuse clips are factory installed.

Wiring Diagram

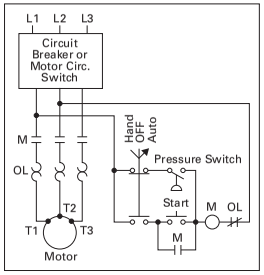

Figure 8-4. Typical Wiring Diagram

Product Selection

Table 8-9. Class ECN54 — Combination Pump Panel — Fusible Disconnect

Motor Voltage ①	Max. hp 50/60 Hz	NEMA Size	Fuse Clip Rating ②		Narrow Width ③	Standard Width ③
			Amperes	Volts	Catalog Number	Catalog Number
230 460 —	7-1/2 10 —	1	30 30 Not Installed	250 600 Not Installed	**ECN5412BAB-E14** **ECN5412CAC-E14** **ECN5412AAA-E14**	**ECN5412BAB** **ECN5412CAC** **ECN5412AAA**
230 460 —	15 25 —	2	60 60 Not Installed	250 600 Not Installed	**ECN5422BAD-E14** **ECN5422CAE-E14** **ECN5422AAA-E14**	**ECN5422BAD** **ECN5422CAE** **ECN5422AAA**
230 460 —	30 50 —	3	100 100 Not Installed	250 600 Not Installed	— — —	**ECN5432BAF** **ECN5432CAG** **ECN5432AAA**
230 460 —	50 100 —	4	200 200 Not Installed	250 600 Not Installed	— — —	**ECN5442BAH** **ECN5442CAJ** **ECN5442AAA**
230 460	100 200	5	400 400	250 600	— —	**ECN5452BAK** **ECN5452CAL**
230 460	200 400	6	600 600	250 600	— —	**ECN5462BAM** **ECN5462CAN**
460	600	7	1200	600	—	**ECN5472CAQ**

Starters do not include heater packs. Select 1 carton of 3 heater packs.
Heater pack selection, **Page 16-6**.
Starters with Electronic Overload — See **Page 16-45** of Modification Codes.

① Dual element fuse ratings.
② Class R fuse clips, except for Size 7 which uses Class L fuse clips. For starters with clips "Not Installed", select fuse clip kit from **Table 8-8**.
③ To order without the START pushbutton, add Modification Code **P6**.

Note: Stainless Steel enclosure may be ordered by changing the seventh digit to **A**. Type 3R Rating will still apply.

For Other Volts and Hertz Applications

For other than listed volts and hertz, select required controller by Catalog Number and replace the magnet coil alpha designation, 8th digit in Catalog Number with proper Code Suffix from **Table 8-10**.

Example: For 600V 60 Hz coil, change ECN5412**B**AC to ECN5412**D**AC

Table 8-10. Coil Voltage

Coil Volts and Hertz	Suffix Code
120/60 or 110/50	**A**
240/60 or 220/50	**B**
480/60 or 440/50	**C**
600/60 or 550/50	**D**
208/60	**E**

Kits ..... **Page 8-4**
Dimensions..... **Page 15-9**
Modifications..... **Page 16-40**

Product Description

- 3-Phase Magnetic
- Interchangeable Heater OLR

These ECN55 Pump Controllers feature the Cutler-Hammer Freedom Line starters. They have a HAND/OFF/AUTO selector switch and START pushbutton mounted on the enclosure and a RESET button on the front — wiring is as illustrated in the wiring diagram on **Page 8-8**.

Note: Type 3R enclosure does not include top conduit hubs. Hubs are available in kit form — see **Page 8-4**.

Note: If branch circuit protective device is 45A or greater, C320FBR1 fuse kit (panel mounted) may be required for control circuit protection per NEC 430-72.

Note: Stainless Steel enclosure may be ordered by changing the seventh digit to **A**. Type 3R Rating will still apply.

Dimensions

Table 8-11. Panel Space

Panel Size	NEMA Size	Position (see Figure 8-5)	Approximate Dimensions in Inches (mm)	
			Width W	Height H
Narrow ①	1 – 2	—	5.5 (140)	6.0 (152)
Standard	1 – 3	—	8.5 (216)	26.0 (660)
	4	—	8.5 (216)	39.0 (991)
	5	A	10.0 (254)	22.0 (559)
		B	15.0 (381)	12.0 (305)
Oversize	1 – 2	—	12.0 (318)	39.0 (991)
	3	—	11.0 (279)	39.0 (991)

① Space is between disconnect switch or circuit breaker and starter.

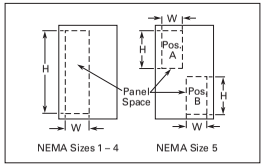

Figure 8-5. Panel Space

Product Selection

Table 8-12. Class ECN55 — Combination Pump Panel — Circuit Breaker

Motor Voltage	Max. hp 50/60 Hz	NEMA Size	Circuit Breaker Type	Narrow Width ②	Standard Width ②
				Catalog Number	Catalog Number
230	1 3 7-1/2	1	HMCPE 7A HMCPE 15A HMCPE 30A	**ECN5512BAC-E14** **ECN5512BAD-E14** **ECN5512BAE-E14**	**ECN5512BAC** **ECN5512BAD** **ECN5512BAE**
460	1 3 5 10		HMCPE 3A HMCPE 7A HMCPE 15A HMCPE 30A	**ECN5512CAB-E14** **ECN5512CAC-E14** **ECN5512CAD-E14** **ECN5512CAE-E14**	**ECN5512CAB** **ECN5512CAC** **ECN5512CAD** **ECN5512CAE**
230 460	10 25	2	HMCPE 50A HMCPE 50A	**ECN5522BAF-E14** **ECN5522CAF-E14**	**ECN5522BAF** **ECN5522CAF**
230 460	30 50	3	HMCPE 100A HMCPE 100A	— —	**ECN5532BAG** **ECN5532CAG**
230 460	50 100	4	HMCP 150A HMCP 150A	— —	**ECN5542BAH** **ECN5542CAH**
230 230 460 460	60 100 150 200	5	HMCP 250A HMCP 400A HMCP 250A HMCP 400A	— — — —	**ECN5552BAJ** **ECN5552BAK** **ECN5552CAJ** **ECN5552CAK**
230 230 460 460	125 200 300 400	6	HMCP 600A MD 800A HMCP 600A MD 800A	— — — —	**ECN5562BAL** **ECN5562BAM** **ECN5562CAL** **ECN5562CAM**
230 230 460 460	250 300 500 600	7 ③	④ ④ ④ ④	— — — —	**ECN5572BAU** **ECN5572BAU** **ECN5572CAU** **ECN5572CAU**

Starters do not include heater packs. Select 1 carton of 3 heater packs. Heater pack selection, **Page 16-6**.

② To order without the START pushbutton, add Mod Code **P6**.
③ Consult factory in the event ground fault protection is required.
④ Supply hp, voltage, FLA and whether motor is design E or not when ordering the starter.

Table 8-13. Coil Voltage

Coil Volts and Hertz	Suffix Code
120/60 or 110/50	**A**
240/60 or 220/50	**B**
480/60 or 440/50	**C**
600/60 or 550/50	**D**
208/60	**E**

For Other Volts and Hertz Applications

For other than listed volts and hertz, select required controller by Catalog Number and replace the magnet coil alpha designation, 8th digit in Catalog Number with proper Code Suffix from **Table 8-13**. Example: For 600V 60 Hz coil, change ECN5512**C**AC to ECN5512**D**AC.

Kits ..... **Page 8-4**
Dimensions ..... **Page 15-9**
Modifications ..... **Page 16-40**

A200 Vacuum — Fusible Disconnect

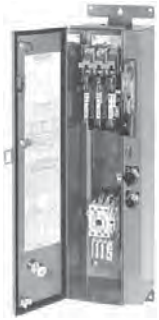

Narrow Width
Size 2 Type 3R

Product Description

- 3-Phase Magnetic
- Interchangeable Heater OLR

Standard ECN54 controllers have a HAND/OFF/AUTO selector switch and START and RESET pushbuttons mounted on the enclosure and are wired as illustrated in **Figure 8-6**.

Note: Type 3R enclosure does not include top conduit hubs. Hubs are available in kit form — see **Page 8-4**.

Note: If branch circuit protective device is 45A or greater, C320FBR1 fuse kit (panel mounted) may be required for control circuit protection per NEC 430-72.

Note: Stainless Steel enclosure may be ordered by changing the seventh digit to **A**. Type 3R Rating will still apply.

Wiring Diagram

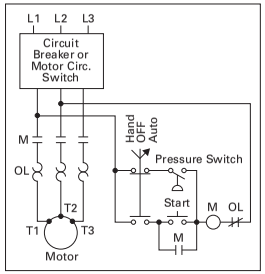

Figure 8-6. Typical Wiring Diagram

Product Selection

Table 8-14. Class EC254 — Combination Vacuum Pump Panel — Fusible Disconnect

Motor Voltage ①	Max. hp 50/60 Hz	NEMA Size	Fuse Clip Rating ②		Narrow Width ③	Standard Width ③
			Amperes	Volts	Catalog Number	Catalog Number
230 460 —	7-1/2 10 —	1	30 30 Not Installed	250 600 Not Installed	**EC25412BAB-E14** **EC25412CAC-E14** **EC25412AAA-E14**	**EC25412BAB** **EC25412CAC** **EC25412AAA**
230 460 —	15 25 —	2	60 60 Not Installed	250 600 Not Installed	**EC25422BAD-E14** **EC25422CAE-E14** **EC25422AAA-E14**	**EC25422BAD** **EC25422CAE** **EC25422AAA**
230 460 —	30 50 —	3	100 100 Not Installed	250 600 Not Installed	**—** **—** **—**	**EC25432BAF** **EC25432CAG** **EC25432AAA**
230 460 —	50 100 —	4	200 200 Not Installed	250 600 Not Installed	**—** **—** **—**	**EC25442BAH** **EC25442CAJ** **EC25442AAA**
230 460	100 200	5	400 400	250 600	**—** **—**	**EC25452BAK** **EC25452CAL**
230 460	200 400	6	600 600	250 600	**—** **—**	**EC25462BAM** **EC25462CAN**
460	600	7	1200	600	**—**	**EC25472CAQ**
Starters do not include heater packs. Select 1 carton of 3 heater packs. Heater pack selection, **Page 16-6.**						

① Dual element fuse ratings.
② Class R fuse clips, except for Size 7 which uses Class L fuse clips. For starters with clips "Not Installed", select fuse clip kit from **Table 8-8**.
③ To order without the START pushbutton, add Modification Code **P6**.

Note: Stainless Steel enclosure may be ordered by changing the seventh digit to **A**. Type 3R Rating will still apply.

For Other Volts and Hertz Applications

For other than listed volts and hertz, select required controller by Catalog Number and replace the magnet coil alpha designation, 8th digit in Catalog Number with proper Code Suffix from **Table 8-15**.

Example: For 600V 60 Hz coil, change EC25412**B**AC to EC25412**D**AC

Table 8-15. Coil Voltage

Coil Volts and Hertz	Suffix Code
120/60 or 110/50	**A**
240/60 or 220/50	**B**
480/60 or 440/50	**C**
600/60 or 550/50	**D**
208/60	**E**

A200 Vacuum — Circuit Breaker

Product Description

- 3-Phase Magnetic
- Interchangeable Heater OLR

These ECN55 Pump Controllers feature the Cutler-Hammer A200 starters. They have a HAND/OFF/AUTO selector switch and START pushbutton mounted on the enclosure and a RESET button on the front — wiring is as illustrated in the wiring diagram on **Page 8-11**.

Note: Type 3R enclosure does not include top conduit hubs. Hubs are available in kit form — see **Page 8-4**.

Note: If branch circuit protective device is 45A or greater, C320FBR1 fuse kit (panel mounted) may be required for control circuit protection per NEC 430-72.

Note: Stainless Steel enclosure may be ordered by changing the seventh digit to **A**. Type 3R Rating will still apply.

Product Selection

Table 8-16. Class EC255 — Combination Vacuum Pump Panel — Circuit Breaker

Motor Voltage	Max. hp 50/60 Hz	NEMA Size	Circuit Breaker Type	Narrow Width ①	Standard Width ②
				Catalog Number	Catalog Number
230	1 3 7-1/2	1	HMCPE 7A HMCPE 15A HMCPE 30A	**EC25512BAC-E14** **EC25512BAD-E14** **EC25512BAE-E14**	**EC25512BAC** **EC25512BAD** **EC25512BAE**
460	1 3 5 10		HMCPE 3A HMCPE 7A HMCPE 15A HMCPE 30A	**EC25512CAB-E14** **EC25512CAC-E14** **EC25512CAD-E14** **EC25512CAE-E14**	**EC25512CAB** **EC25512CAC** **EC25512CAD** **EC25512CAE**
230 460	10 25	2	HMCPE 50A HMCPE 50A	**EC25522BAF-E14** **EC25522CAF-E14**	**EC25522BAF** **EC25522CAF**
230 460	30 50	3	HMCPE 100A HMCPE 100A	**—** **—**	**EC25532BAG** **EC25532CAG**
230 460	50 100	4	HMCP 150A HMCP 150A	**—** **—**	**EC25542BAH** **EC25542CAH**
230 230 460 460	60 100 150 200	5	HMCP 250A HMCP 400A HMCP 250A HMCP 400A	**—** **—** **—** **—**	**EC25552BAJ** **EC25552BAK** **EC25552CAJ** **EC25552CAK**
230 230 460 460	125 200 300 400	6	HMCP 600A MD 800A HMCP 600A MD 800A	**—** **—** **—** **—**	**EC25562BAL** **EC25562BAM** **EC25562CAL** **EC25562CAM**
230 230 460 460	250 300 500 600	7 ②	③ ③ ③ ③	**—** **—** **—** **—**	**EC25572BAU** **EC25572BAU** **EC25572CAU** **EC25572CAU**
Starters do not include heater packs. Select 1 carton of 3 heater packs. Heater pack selection, **Page 16-6.**					

① To order without the START pushbutton, add Mod Code **P6**.
② Consult factory in the event ground fault protection is required.
③ Supply hp, voltage, FLA and whether motor is design E or not when ordering the starter.

For Other Volts and Hertz Applications

For other than listed volts and hertz, select required controller by Catalog Number and replace the magnet coil alpha designation, 8th digit in Catalog Number with proper Code Suffix from **Table 8-17**. Example: For 600V 60 Hz coil, change EC25512**C**AC to EC25512**D**AC.

Table 8-17. Coil Voltage

Coil Volts and Hertz	Suffix Code
120/60 or 110/50	**A**
240/60 or 220/50	**B**
480/60 or 440/50	**C**
600/60 or 550/50	**D**
208/60	**E**

Dimensions

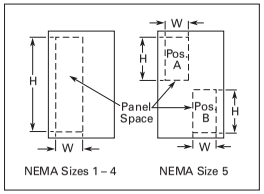

Figure 8-7. Panel Space

Table 9. Panel Space

NEMA Size	Position (see Figure 8-7)	Approximate Dimensions in Inches (mm)	
		Width W	Height H
Panel Size — Narrow ①			
1 – 2	—	5.5 (140)	6.0 (152)
Panel Size — Standard			
1 – 3	—	8.5 (216)	26.0 (660)
4	—	8.5 (216)	39.0 (991)
5	A	10.0 (254)	22.0 (559)
	B	15.0 (381)	12.0 (305)
Panel Size — Oversize			
1 – 2	—	12.0 (318)	39.0 (991)
3	—	11.0 (279)	39.0 (991)

① Space is between disconnect switch or circuit breaker and starter.

Kits ..... **Page 8-4**
Modifications Codes..... **Page 16-40**

Product Description

- 3-Phase Magnetic
- Interchangeable Heater OLR

Standard ECV54, 55 controllers have a HAND/OFF/AUTO selector switch and START pushbutton mounted on the enclosure and are wired as illustrated in **Figure 8-8**.

Note: Type 3R enclosure does not include top conduit hubs. Hubs are available in kit form — see **Page 8-4**.

Note: If branch circuit protective device is 45A or greater, C320FBR1 fuse kit (panel mounted) may be required for control circuit protection per NEC 430-72.

Standards and Certifications

Note: See **Page 18-2** for additional information on Standards and Certifications that apply to all Cutler-Hammer Enclosed Control products.

- UL Listed
- cUL (indicates appropriate CSA Standard investigation)
- ABS Type Approval

Wiring Diagram

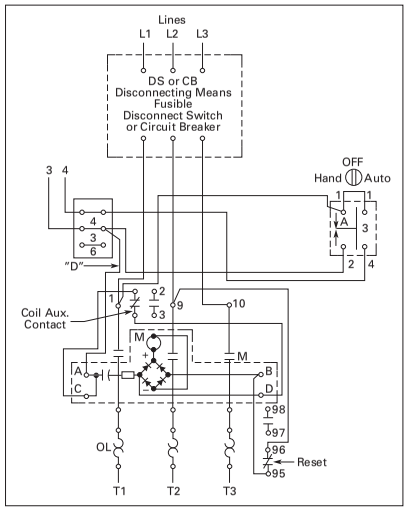

Figure 8-8. Typical Wiring Diagram

Product Selection

Table 8-1. Class ECV54 — Combination Vacuum Pump Panel — Fusible Disconnect

Motor Voltage	Max. hp 50/60 Hz	NEMA Size	Fuse Clip Rating		With START Pushbutton
			Amperes	Volts	Catalog Number
230 460	50 100	4	200 200	250 600	**ECV5442BAH** **ECV5442CAJ**
230 460	100 200	5	400 400	250 600	**ECV5452BAK** **ECV5452CAL**
230 460	200 400	6	600 600	250 600	**ECV5462BAM** **ECV5462CAN**
Starters do not include heater packs. Select 1 carton of 3 heater packs. Heater pack selection, **Page 16-6**.					

Table 8-2. Class ECV55 — Combination Vacuum Pump Panel — Circuit Breaker

Motor Voltage	Max. hp 50/60 Hz	NEMA Size	Circuit Breaker Type	With START Pushbutton
				Catalog Number
230 460	50 100	4	HMCP 150A HMCP 150A	**ECV5542BAH** **ECV5542CAH**
230 230 460 460	75 100 150 200	5	HMCP 250A HMCP 400A HMCP 250A HMCP 400A	**ECV5552BAJ** **ECV5552BAK** **ECV5552CAJ** **ECV5552CAK**
230 460	200 400	6	HMCP 600A HMCP 600A	**ECV5562BAL** **ECV5562CAL**
Starters do not include heater packs. Select 1 carton of 3 heater packs. Heater pack selection, **Page 16-6**.				

Kits . . . . . **Page 8-4**
Dimensions . . . . . **Page 15-9**
Modifications . . . . . **Page 16-40**

Irrigation Pump Panel

Product Description

Eaton's Cutler-Hammer® Irrigation Pump Controllers are combination starters designed to meet the requirements of the agricultural industry. The enclosure is UL Type 3R rated to provide weathertight protection and is available in two sizes. Irrigation application specific accessories and modifications are available to fit the customer's requirements.

The Irrigation Pump Panels use Freedom Series Motor Starting Technology to control motors up to 100 hp @ 460V. These controllers have two styles of overload protection available, interchangeable heater and solid-state overload (SSOL).

- The interchangeable heater overload (C306) utilizes individual heater packs to allow customers the ability to use various heater styles.
- The solid-state overload relay provides enhanced protection and adjustment ranges as compared to bimetallic overload relays. Trip Class 10 and 20 are available, along with a very wide trip current range to make setup very easy.

Standards and Certifications

Note: See **Page 18-2** for additional information on Standards and Certifications that apply to all Cutler-Hammer Enclosed Control products.

- UL Listed
- cUL Listed (indicates appropriate CSA Standard investigation)
- ABS Type Approval

Catalog Number Selection

Table 8-3. Irrigation Pump Panel Catalog Number Selection

EC P 54 12 B A B -

Design
P = Irrigation

Class
54 = Type 3R Pump Panel with Disconnect
55 = Type 3R Pump Panel with HMCP

NEMA Size / Enclosure

12 = Size 1/3R	**42** = Size 4/3R
22 = Size 2/3R	**52** = Size 5/3R
32 = Size 3/3R	**62** = Size 6/3R

Voltage
A = 120V/60 or 110/50
B = 240V/60 or 220/50
C = 460V/60 or 440/50

Cover Control
A = None

Disconnect Fuse Clip Ratings

A = None	**H** = 200A/250V R
B = 30A/250V R	**J** = 200A/600V R
C = 30A/600V R	**K** = 400A/250V R
D = 60A/250V R	**L** = 400A/600V R
E = 60A/600V R	**M** = 600A/250V R
F = 100A/250V R	**N** = 600A/600V R
G = 100A/600V R	

Breaker Ratings

B = 3 Amp	**G** = 100 Amp
C = 7 Amp	**H** = 150 Amp
D = 15 Amp	**N** = 175 Amp ①
E = 30 Amp	**Q** = 225 Amp ①
F = 50 Amp	

Modification Code/ Relay Code

① Thermal magnetic breakers.

Product Selection

Standard ECP54 controllers have a HAND/OFF/AUTO selector switch and START pushbutton mounted on the enclosure and are wired as illustrated in **Figure 8-9**.

Table 8-4. Class ECP54 — Combination Irrigation Pump Panel — Fusible Disconnect

Motor Voltage ①	Max. hp 50/60 Hz	NEMA Size	Fuse Clip Rating ②		Standard Width
			Amperes	Volts	Catalog Number
230 460 —	7-1/2 10 —	1	30 30 Not Installed	250 600 Not Installed	**ECP5412BAB** **ECP5412CAC** **ECP5412AAA**
230 460 —	15 25 —	2	60 60 Not Installed	250 600 Not Installed	**ECP5422BAD** **ECP5422CAE** **ECP5422AAA**
230 460 —	30 50 —	3	100 100 Not Installed	250 600 Not Installed	**ECP5432BAF** **ECP5432CAG** **ECP5432AAA**
Starters do not include heater packs. Select 1 carton of 3 heater packs. Heater pack selection, **Page 16-6**.					

① Dual element fuse ratings.
② Class R fuse clips.

For Other Volts and Hertz Applications

For other than listed volts and hertz, select required controller by Catalog Number and replace the magnet coil alpha designation, 8th digit in Catalog Number with proper Code Suffix from **Table 8-5**.

Example: For 600V 60 Hz coil, change ECP5412**B**AB to ECP5412**D**AB

Table 8-5. Coil Voltage

Coil Volts and Hertz	Suffix Code
120/60 or 110/50	**A**
240/60 or 220/50	**B**
480/60 or 440/50	**C**
600/60 or 550/50	**D**
208/60	**E**

Fuse Clips

Table 8-6. C351 — Fuse Clip Selection — 3-Pole (3 Fuses)

NEMA Size	Motor Voltage	Fuse Clip Rating		Fuse Clip Kit for Field Installation in Non-fusible Starter	
		Amperes	Volts	For Non-rejection Type Fuses	For use with "R" Rejection Type Fuses
				Catalog Number	Catalog Number
1	200/230 460 – 575	30 30	250 600	**C351KC21** **C351KD22-61**	**C351KC21R** **C351KD22-61R**
2	200 230 460 – 575	60 60 60	250 250 600	**C351KD22-61** **C351KD22-61** **C351KD62**	**C351KD22-61R** **C351KD22-61R** **C351KD62R**
3	200 230 460 – 575	100 100 100	250 250 600	**C351KE23-63** **C351KE23-63** **C351KE23-63**	**C351KE23-63** ① **C351KE23-63** ① **C351KE23-63** ①

① Fuse clip "R" rejection members for use with Class R fuses are supplied loose both in Fuse Clip Kits and when fuse clips are factory installed.

Kits ..... **Page 8-4**
Dimensions ..... **Page 15-9**
Modifications ..... **Page 16-40**

Product Selection

Table 8-7. Class ECP54 — Combination Irrigation Pump Panel with Solid-State Overload — Fusible Disconnect ①

Motor Voltage	Max. hp	NEMA Size	Fuse Clip Amperes	Trip Range	Catalog Number
240V	1 3 7-1/2	1 1 1	30 30 30	1.0 – 5.0 1.6 – 8.0 6.4 – 32	**ECP5412BAB-R60/C** **ECP5412BAB-R60/D** **ECP5412BAB-R60/E**
	10 15	2 2	60 60	9 – 45 9 – 45	**ECP5422BAD-R60/F** **ECP5422BAD-R60/F**
	25	3	100	15 – 75	**ECP5432BAF-R60/G**
480V	1 2 5 10	1 1 1 1	30 30 30 30	1.0 – 5.0 1.6 – 8.0 6.4 – 32 6.4 – 32	**ECP5412CAC-R60/C** **ECP5412CAC-R60/D** **ECP5412CAC-R60/E** **ECP5412CAC-R60/E**
	20 25	2 2	60 60	9 – 45 9 – 45	**ECP5422CAE-R60/F** **ECP5422CAE-R60/F**
	50	3	100	15 – 75	**ECP5432CAG-R60/G**

① Motor FLA based on NEC Table. Overload has selectable trip class 5, 10, 20 and 30 and Auto or Manual settings.

Table 8-8. Class ECP55 — Combination Irrigation Pump Panel with Solid-State Overload — Circuit Breaker ②

Motor Voltage	Max. hp	NEMA Size	Breaker Rating	Trip Range	Catalog Number
240V	1 3 7-1/2	1 1 1	7 15 30	1.0 – 5.0 1.6 – 8.0 6.4 – 32	**ECP5512BAC-R60/C** **ECP5512BAD-R60/D** **ECP5512BAE-R60/E**
	10 15	2 2	50 50	6.4 – 32 9 – 45	**ECP5522BAF-R60/E** **ECP5522BAF-R60/F**
	25	3	100	15 – 75	**ECP5532BAG-R60/G**
	50	4	100	30 – 150	**ECP5532BAH-R60/J**
480V	1 2 5 10	1 1 1 1	30 30 30 30	1.0 – 5.0 1.6 – 8.0 6.4 – 32 6.4 – 32	**ECP5512CAB-R60/C** **ECP5512CAC-R60/D** **ECP5512CAD-R60/E** **ECP5512CAE-R60/E**
	20 25	2 2	60 60	9 – 45 9 – 45	**ECP5522CAE-R60/E** **ECP5522CAF-R60/F**
	50	3	100	15 – 75	**ECP5532CAG-R60/G**
	100	4	150	30 – 150	**ECP5532CAG-R60/J**

② Motor FLA based on NEC Table. Overload has selectable trip class 5, 10, 20 and 30 and Auto or Manual settings.

Table 8-9. Class ECP55 — Combination Irrigation Pump Panel — Circuit Breaker

Motor Voltage	Max. hp	NEMA Size	Breaker Rating	Catalog Number
240V	1 3 7-1/2	1 1 1	7 15 30	**ECP5512BAC** **ECP5512BAD** **ECP5512BAE**
	10 15	2 2	50 70	**ECP5522BAF** **ECP5522BAW**
	25	3	100	**ECP5532BAG**
	50	4	150	**ECP5542BAH**
480V	1 3 5 10	1 1 1 1	3 7 15 30	**ECP5512CAB** **ECP5512CAC** **ECP5512CAD** **ECP5512CAE**
	10 25	2 2	30 50	**ECP5522CAE** **ECP5522CAF**
	50	3	100	**ECP5532CAG**
	100	4	175	**ECP5542CAN**

Relays

Table 8-10. Freedom Solid-State Overload Relays

C396 Overload Relay ③	NEMA Size	Full Load Current Adjustment Range (A)	3-Phase Automatic/Manual Reset
			Class 5/10/20/30
Catalog Number Suffix ➡		④	R61_
	00	0.1 – 0.5 0.4 – 2.0 1.0 – 5.0 1.6 – 8.0	**A** **B** **C** **D**
	0, 1	0.1 – 0.5 0.4 – 2.0 1.0 – 5.0 1.6 – 8.0 6.4 – 32	**A** **B** **C** **D** **E**
	2	9 – 45	**F**
	3	15 – 75 22 – 110	**G** **H**
	4	30 – 150	**J**
	5	96 – 300	**C**
	6	192 – 600	**C**

③ Features:
- Self Powered
- Phase Loss Protection
- Current Adjustment Knob
- ±1% Repeat Accuracy
- 1NO and 1NC Isolated Contacts

④ Complete Modification Code includes overload range. Example **R61/C**.

Wiring Diagram

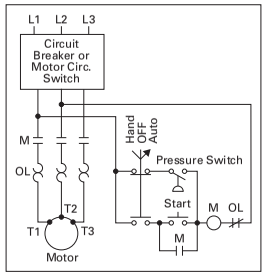

Figure 8-9. Typical Wiring Diagram

Dimensions ..... **Page 15-9**
Modifications ..... **Page 16-40**

Catalog Number Selection

Table 8-11. Freedom Duplex Pump Panels Catalog Numbering System

E C N 6 8 2 1 A A F - __

Design
N = Freedom NEMA

Modification Codes
See **Page 16-40**

Cover Control
See **Table 8-14**

Coil Voltage and/or Control Transformers
See **Tables 8-12** and **8-13**

Class	Page
68 = Duplex, Non-combination	**8-19**
69 = Duplex, with Disconnect Switch	**8-20**
70 = Duplex, with HMCP/E	**8-22**

NEMA Size
2 = Size 2
3 = Size 3
4 = Size 4
5 = Size 5
6 = Size 6
7 = Size 7
8 = Size 8
9 = Size 9

Disconnect Fuse Clip Ratings

A = None	**G** = 100A/600V R	**N** = 600A/600V R
B = 30A/250V R	**H** = 200A/250V R	**P** = 800A/600V L
C = 30A/600V R	**J** = 200A/600V R	**Q** = 1200A/600V L
D = 60A/250V R	**K** = 400A/250V R	**R** = 1600A/600V L
E = 60A/600V R	**L** = 400A/600V R	**S** = 2000A/600V L
F = 100A/250V R	**M** = 600A/250V R	**T** = by Description

HMCP/E or Breaker Ratings

A = None	**H** = 150A	**R** = 3000A
B = 3A	**J** = 250A	**T** = by Description
C = 7A	**K** = 400A	**5** = 3A ①
D = 15A	**L** = 600A	**6** = 7A ①
E = 30A	**M** = 800A	**7** = 15A ①
F = 50A	**N** = 1000A	**8** = 30A ①
G = 100A	**P** = 1200A	**9** = 50A ①
	Q = 2000A	**I** = 100A ①
		2 = 70A

Enclosure Type
1 = Type 1 — General Purpose
2 = Type 3R — Rainproof
3 = Type 4 — Watertight (Painted Steel)
4 = Type 4X — Watertight (304-Grade Stainless Steel)
5 = Type 4X — Corrosion (Nonmetallic)
6 = Type 7/9 — Bolted Hazardous Location
7 = Type 7/9 — Threaded Hazardous Location
8 = Type 12 — Dust-Tight
9 = Type 4X — 316-Grade

① Use for Sizes 0 – 3, HMCP 600V applications only.

Table 8-12. Magnetic Coil Codes (System Voltage) ②

Code	Magnet Coil	Code	Magnet Coil	Code	Magnet Coil
A	120/60 110/50	**K**	240/50	**U**	24/50
B	240/60 220/50	**L**	380/50	**V**	32/50
C	460/60 440/50	**M**	415/50	**W**	48/60
D	575/60 550/50	**P**	12V DC	**X**	104 – 120/60
E	208/60	**Q**	24V DC	**Y**	48/50
G	550/50	**R**	48V DC	**Z**	By Description
H	277/60	**S**	125V DC		
J	208 – 240/60	**T**	24/60		

② When control power transformer modification codes (**C1** – **C11**) are used or when starter class includes CPT (i.e. ECN07, 18) see table to the right for system voltage code.

Table 8-13. Control Power Transformer Codes (System Voltage)

Code	Primary	Secondary
B	240/480 – 220/440 Wired for 240V	120/60 – 110/50
C	240/480 – 220/440 Wired for 480V	120/60 – 110/50
D	600/60 – 550/50	120/60 – 110/50
E	208/60	120/60
H	277/60	120/60
L	380/50	110/50
M	415/50	110/50
Q	208/60	24
R	240/480 – 220/440 Wired for 240V	24
S	240/480 – 220/440 Wired for 480V	24
T	600/60	24
U	277/60	24
V	380/50	24
W	415/50	24
X	240/480/600 Wired for 480V	120
Y	240/480/600 Wired for 480V	24
Z	By Description	

Standards and Certifications

Note: See **Page 18-2** for additional information on Standards and Certifications that apply to all Cutler-Hammer Enclosed Control products.

- UL Listed
- cUL Listed (indicates appropriate CSA Standard investigation)
- ABS Type Approval

Cover Control

Non-reversing

Flange Control Kits

For on-the-job conversion of Type 1, 3R, 4X and 12 enclosed starters. Knockouts are provided on the Type 1 flange. Type 3R, 4X and 12 have prepunched holes with removable hole plugs.

Factory Installed Pilot Devices

To order factory installed pilot devices, change the 9th character of the Catalog Number to the alpha shown in the table to the right. Example: to order an **ECN0514CAA** with START/STOP pushbuttons and a red pilot light, change the **A** to a **C**, i.e. ECN0514**CC**A.

Figure 8-10. **Figure 8-11.**

Table 8-14. Non-reversing Cover Control

Description	Factory Installed Flange Control			Field Installation Kits	
	Position 9 Alpha	Type 1 Non-combination ① See Figure 8-10	All Others ② See Figure 8-11	Type 1 Non-combination ① See Figure 8-10	All Others ② See Figure 8-11
				Catalog Number	Catalog Number
No Cover Mounted Pilot Devices	**A**	■	■	**C400GK0**	—
START/STOP Pushbuttons	**B**	■	■	**C400GK1**	**C400T1**
with Red RUN Pilot Light	**C**	■	■	**C400GK12** ③	—
with Red RUN/Green OFF Lights	**D**	■	■	**C400GK16** ③	—
ON/OFF Pushbuttons	**E**	—	■	—	**C400T2**
with Red RUN Pilot Light	**F**	—	■	—	—
with Red RUN/Green OFF Lights	**G**	—	■	—	—
HAND/OFF/AUTO Selector Switch	**H**	■	■	**C400GK3**	**C400T12**
with Red RUN Pilot Light	**J**	■	■	**C400GK32** ③	—
with Red RUN/Green OFF Lights	**K**	■	■	**C400GK36** ③	—
START Pushbutton	**L**	—	■	—	**C400T3**
ON Pushbutton	**M**	—	■	—	**C400T4**
OFF Pushbutton	**N**	—	■	—	**C400T5**
Red RUN Pilot Light	**P**	■	■	**C400GK42** ③	**C400T9** ③
Green OFF	**Q**	■	■	**C400GK41** ③	**C400T10** ③
Red RUN/Green OFF Pilot Lights	**R**	■	■	**C400GK46** ③	**C400T11** ③
START/STOP Selector Switch	**S**	—	■	—	**C400T13**
with Red RUN Pilot Light	**T**	—	■	—	—
with Red RUN/Green OFF Lights	**U**	—	■	—	—
ON/OFF Selector Switch	**V**	—	■	—	**C400T14**
with Red RUN Pilot Light	**W**	—	■	—	—
with Red RUN/Green OFF Lights	**X**	—	■	—	—

① Type 1, NEMA Sizes 00 – 4 Non-combination ONLY.
② Type 1, NEMA Sizes 5 – 9 Non-combination PLUS all Type 3R, 4X, 12 Non-combination PLUS all Combination — NEMA Sizes only.
③ Add Code Letter from the table below to Catalog Number for voltage — Kits only. Example: C400T9**B**.

Rating	Code Letter	Rating	Code Letter	Rating	Code Letter
120V 60 Hz	**A**	240V 60 Hz	**B**	480V 60 Hz	**C**
208V 60 Hz	**E**	380V 50 Hz	**L**	600V 60 Hz	**D**

Features

- Full Voltage Non-reversing Non-combination
- 3-Phase Magnetic, 3-Pole
- Interchangeable Heater OLR
- 600V Maximum

Alternator

In normal operation, the alternator automatically selects alternate pumps for each succeeding cycle to equalize pump wear. During periods of heavy demand, both pumps will operate.

Product Selection

Table 8-15. Class ECN68 — Non-combination Duplex Pump Panels with Automatic Alternator ②③

NEMA Size	Motor Voltage	Max. hp Rating	Magnet Coil Voltage	Type 1 General Purpose	Type 3R Rainproof	Type 4X ④ Watertight & Dust-Tight Stainless Steel	Type 12 Dust-Tight Industrial External Reset ①	Component Starter (Open) ⑤
				Catalog Number	Catalog Number	Catalog Number	Catalog Number	Catalog Number
0	—	—	120	ECN6801AAA	ECN6802AAA	ECN6804AAA	ECN6808AAA	AN16BN0AC
	200	3	208	ECN6801EAA	ECN6802EAA	ECN6804EAA	ECN6808EAA	AN16BN0EC
	230	3	240	ECN6801BAA	ECN6802BAA	ECN6804BAA	ECN6808BAA	AN16BN0BC
	460	5	480	ECN6801CAA	ECN6802CAA	ECN6804CAA	ECN6808CAA	AN16BN0CC
	575	5	600	ECN6801DAA	ECN6802DAA	ECN6804DAA	ECN6808DAA	AN16BN0DC
1	—	—	120	ECN6811AAA	ECN6812AAA	ECN6814AAA	ECN6818AAA	AN16DN0AB
	200	7-1/2	208	ECN6811EAA	ECN6812EAA	ECN6814EAA	ECN6818EAA	AN16DN0EB
	230	7-1/2	240	ECN6811BAA	ECN6812BAA	ECN6814BAA	ECN6818BAA	AN16DN0BB
	460	10	480	ECN6811CAA	ECN6812CAA	ECN6814CAA	ECN6818CAA	AN16DN0CB
	575	10	600	ECN6811DAA	ECN6812DAA	ECN6814DAA	ECN6818DAA	AN16DN0DB
2	—	—	120	ECN6821AAA	ECN6822AAA	ECN6824AAA	ECN6828AAA	AN16GN0AB
	200	10	208	ECN6821EAA	ECN6822EAA	ECN6824EAA	ECN6828EAA	AN16GN0EB
	230	15	240	ECN6821BAA	ECN6822BAA	ECN6824BAA	ECN6828BAA	AN16GN0BB
	460	25	480	ECN6821CAA	ECN6822CAA	ECN6824CAA	ECN6828CAA	AN16GN0CB
	575	25	600	ECN6821DAA	ECN6822DAA	ECN6824DAA	ECN6828DAA	AN16GN0DB
3	—	—	120	ECN6831AAA	ECN6832AAA	ECN6834AAA	ECN6838AAA	AN16KN0A
	200	25	208	ECN6831EAA	ECN6832EAA	ECN6834EAA	ECN6838EAA	AN16KN0E
	230	30	240	ECN6831BAA	ECN6832BAA	ECN6834BAA	ECN6838BAA	AN16KN0B
	460	50	480	ECN6831CAA	ECN6832CAA	ECN6834CAA	ECN6838CAA	AN16KN0C
	575	50	600	ECN6831DAA	ECN6832DAA	ECN6834DAA	ECN6838DAA	AN16KN0D
4	—	—	120	ECN6841AAA	ECN6842AAA	ECN6844AAA	ECN6848AAA	AN16NN0A
	200	40	208	ECN6841EAA	ECN6842EAA	ECN6844EAA	ECN6848EAA	AN16NN0E
	230	50	240	ECN6841BAA	ECN6842BAA	ECN6844BAA	ECN6848BAA	AN16NN0B
	460	100	480	ECN6841CAA	ECN6842CAA	ECN6844CAA	ECN6848CAA	AN16NN0C
	575	100	600	ECN6841DAA	ECN6842DAA	ECN6844DAA	ECN6848DAA	AN16NN0D

Starters do not include heater packs. Select 2 cartons of 3 heater packs (2 overload relays — 1 for each motor). Heater Pack Selection, **Page 16-6**.

① All Type 12 enclosures are standardized with external reset. For internal reset, order Modification Code **R5**.

② Circuitry arranged for double-pole pilot devices.

③ All duplexes come standard with alternator. To remove, add Modification Code **D12**.

④ The Catalog Numbers listed in the Type 4X column are for Type 4X 304-Grade Stainless Steel, as indicated by the seventh digit **4**. Example: ECN6804AAA. To order Type 4X 316-Grade Stainless Steel, change that digit to **9**. To order Type 4 Painted Steel, change that digit to **3**. To order Nonmetallic, change that digit to **5**. For details on these Alternate Enclosures, see **Tab 14**.

⑤ Requires 2 starters.

Cover Control ..... **Page 8-18**
Other Magnet Coils ..... **Page 8-17**
Dimensions ..... **Page 15-9**
Accessories ..... **Page 16-4**
Modifications ..... **Page 16-40**
Technical Data ..... **Page 18-7**

Features

- Full Voltage Non-reversing Combination
- 3-Phase Magnetic, 3-Pole
- Interchangeable Heater OLR
- 600V Maximum

Alternator

In normal operation, the alternator automatically selects alternate pumps for each succeeding cycle to equalize pump wear. During periods of heavy demand, both pumps will operate.

Product Selection

Table 8-16. Class ECN69 — Combination Duplex Pump Panels with Automatic Alternator — Fusible Disconnect ④⑤

NEMA Size	Motor Voltage	Max. hp Rating Dual Element Fuses	Magnet Coil Voltage ①	Fuse Clip Amps.	Type 1 General Purpose	Type 3R Rainproof	Type 4X ⑥ Watertight & Dust-Tight Stainless Steel	Type 12 Dust-Tight Industrial External Reset ②③	Component Starter (Open) ⑦
					Catalog Number	Catalog Number	Catalog Number	Catalog Number	Catalog Number
0	230	3	120	30A	ECN6901AAB	ECN6902AAB	ECN6904AAB	ECN6908AAB	AN16BN0AC
	460	5	120		ECN6901AAC	ECN6902AAC	ECN6904AAC	ECN6908AAC	AN16BN0AC
	200	3	208		ECN6901EAB	ECN6902EAB	ECN6904EAB	ECN6908EAB	AN16BN0EC
	230	3	240		ECN6901BAB	ECN6902BAB	ECN6904BAB	ECN6908BAB	AN16BN0BC
	460	5	480		ECN6901CAC	ECN6902CAC	ECN6904CAC	ECN6908CAC	AN16BN0CC
	575	5	600		ECN6901DAC	ECN6902DAC	ECN6904DAC	ECN6908DAC	AN16BN0DC
1	230	7-1/2	120	30A	ECN6911AAB	ECN6912AAB	ECN6914AAB	ECN6918AAB	AN16DN0AB
	460	10	120		ECN6911AAC	ECN6912AAC	ECN6914AAC	ECN6918AAC	AN16DN0AB
	200	7-1/2	208		ECN6911EAB	ECN6912EAB	ECN6914EAB	ECN6918EAB	AN16DN0EB
	230	7-1/2	240		ECN6911BAB	ECN6912BAB	ECN6914BAB	ECN6918BAB	AN16DN0BB
	460	10	480		ECN6911CAC	ECN6912CAC	ECN6914CAC	ECN6918CAC	AN16DN0CB
	575	10	600		ECN6911DAC	ECN6912DAC	ECN6914DAC	ECN6918DAC	AN16DN0DB
2	230	15	120	60A	ECN6921AAD	ECN6922AAD	ECN6924AAD	ECN6928AAD	AN16GN0AB
	460	25	120		ECN6921AAE	ECN6922AAE	ECN6924AAE	ECN6928AAE	AN16GN0AB
	200	10	208		ECN6921EAD	ECN6922EAD	ECN6924EAD	ECN6928EAD	AN16GN0EB
	230	15	240		ECN6921BAD	ECN6922BAD	ECN6924BAD	ECN6928BAD	AN16GN0BB
	460	25	480		ECN6921CAE	ECN6922CAE	ECN6924CAE	ECN6928CAE	AN16GN0CB
	575	25	600		ECN6921DAE	ECN6922DAE	ECN6924DAE	ECN6928DAE	AN16GN0DB
3	230	30	120	100A	ECN6931AAF	ECN6932AAF	ECN6934AAF	ECN6938AAF	AN16KN0A
	460	50	120		ECN6931AAG	ECN6932AAG	ECN6934AAG	ECN6938AAG	AN16KN0A
	200	25	208		ECN6931EAF	ECN6932EAF	ECN6934EAF	ECN6938EAF	AN16KN0E
	230	30	240		ECN6931BAF	ECN6932BAF	ECN6934BAF	ECN6938BAF	AN16KN0B
	460	50	480		ECN6931CAG	ECN6932CAG	ECN6934CAG	ECN6938CAG	AN16KN0C
	575	50	600		ECN6931DAG	ECN6932DAG	ECN6934DAG	ECN6938DAG	AN16KN0D
4	230	50	120	200A	ECN6941AAH	ECN6942AAH	ECN6944AAH	ECN6948AAH	AN16NN0A
	460	100	120		ECN6941AAJ	ECN6942AAJ	ECN6944AAJ	ECN6948AAJ	AN16NN0A
	200	40	208		ECN6941EAH	ECN6942EAH	ECN6944EAH	ECN6948EAH	AN16NN0E
	230	50	240		ECN6941BAH	ECN6942BAH	ECN6944BAH	ECN6948BAH	AN16NN0B
	460	100	480		ECN6941CAJ	ECN6942CAJ	ECN6944CAJ	ECN6948CAJ	AN16NN0C
	575	100	600		ECN6941DAJ	ECN6942DAJ	ECN6944DAJ	ECN6948DAJ	AN16NN0D

Starters do not include heater packs. Select 2 cartons of 3 heater packs (2 overload relays — 1 for each motor). Heater Pack Selection, **Page 16-6**.

① For 200V and 575V motors — Starters with 120V coil (for separate control) are available. To order, substitute the letter **A** for the eighth character of the listed Catalog Number.

② All Type 12 enclosures are standardized with external reset. For internal reset, order Modification Code **R5**.

③ Type 12 enclosure is without safety door interlock.

④ Circuitry arranged for double-pole pilot devices.

⑤ All duplexes come standard with alternator. To remove, add Modification Code **D12**.

⑥ The Catalog Numbers listed in the Type 4X column are for Type 4X 304-Grade Stainless Steel, as indicated by the seventh digit **4**. Example: ECN6904AAB. To order Type 4X 316-Grade Stainless Steel, change that digit to **9**. To order Type 4 Painted Steel, change that digit to **3**. To order Nonmetallic, change that digit to **5**. For details on these Alternate Enclosures, see **Tab 14**.

⑦ Requires 2 starters.

Cover Control ..... **Page 8-18**
Other Magnet Coils ..... **Page 8-17**
Dimensions ..... **Page 15-9**
Accessories ..... **Page 16-4**
Modifications ..... **Page 16-40**
Technical Data ..... **Page 18-7**

Table 8-17. Class ECN69 — Combination Duplex Pump Panels with Automatic Alternator — Non-fusible Disconnect ③④

NEMA Size	Motor Voltage	Max. hp Rating Dual Element Fuses	Magnet Coil Voltage	Dis-connect Amps.	Type 1 General Purpose Catalog Number	Type 3R Rainproof Catalog Number	Type 4X ⑤ Watertight & Dust-Tight Stainless Steel Catalog Number	Type 12 Dust-Tight Industrial External Reset ①② Catalog Number	Component Starter (Open) ⑥ Catalog Number
0	—	—	120	30A	ECN6901AAA	ECN6902AAA	ECN6904AAA	ECN6908AAA	AN16BN0AC
	200	3	208		ECN6901EAA	ECN6902EAA	ECN6904EAA	ECN6908EAA	AN16BN0EC
	230	3	240		ECN6901BAA	ECN6902BAA	ECN6904BAA	ECN6908BAA	AN16BN0BC
	460	5	480		ECN6901CAA	ECN6902CAA	ECN6904CAA	ECN6908CAA	AN16BN0CC
	575	5	600		ECN6901DAA	ECN6902DAA	ECN6904DAA	ECN6908DAA	AN16BN0DC
1	—	—	120	30A	ECN6911AAA	ECN6912AAA	ECN6914AAA	ECN6918AAA	AN16DN0AB
	200	7-1/2	208		ECN6911EAA	ECN6912EAA	ECN6914EAA	ECN6918EAA	AN16DN0EB
	230	7-1/2	240		ECN6911BAA	ECN6912BAA	ECN6914BAA	ECN6918BAA	AN16DN0BB
	460	10	480		ECN6911CAA	ECN6912CAA	ECN6914CAA	ECN6918CAA	AN16DN0CB
	575	10	600		ECN6911DAA	ECN6912DAA	ECN6914DAA	ECN6918DAA	AN16DN0DB
2	—	—	120	60A	ECN6921AAA	ECN6922AAA	ECN6924AAA	ECN6928AAA	AN16GN0AB
	200	10	208		ECN6921EAA	ECN6922EAA	ECN6924EAA	ECN6928EAA	AN16GN0EB
	230	15	240		ECN6921BAA	ECN6922BAA	ECN6924BAA	ECN6928BAA	AN16GN0BB
	460	25	480		ECN6921CAA	ECN6922CAA	ECN6924CAA	ECN6928CAA	AN16GN0CB
	575	25	600		ECN6921DAA	ECN6922DAA	ECN6924DAA	ECN6928DAA	AN16GN0DB
3	—	—	120	100A	ECN6931AAA	ECN6932AAA	ECN6934AAA	ECN6938AAA	AN16KN0A
	200	25	208		ECN6931EAA	ECN6932EAA	ECN6934EAA	ECN6938EAA	AN16KN0E
	230	30	240		ECN6931BAA	ECN6932BAA	ECN6934BAA	ECN6938BAA	AN16KN0B
	460	50	480		ECN6931CAA	ECN6932CAA	ECN6934CAA	ECN6938CAA	AN16KN0C
	575	50	600		ECN6931DAA	ECN6932DAA	ECN6934DAA	ECN6938DAA	AN16KN0D
4	—	—	120	200A	ECN6941AAA	ECN6942AAA	ECN6944AAA	ECN6948AAA	AN16NN0A
	200	40	208		ECN6941EAA	ECN6942EAA	ECN6944EAA	ECN6948EAA	AN16NN0E
	230	50	240		ECN6941BAA	ECN6942BAA	ECN6944BAA	ECN6948BAA	AN16NN0B
	460	100	480		ECN6941CAA	ECN6942CAA	ECN6944CAA	ECN6948CAA	AN16NN0C
	575	100	600		ECN6941DAA	ECN6942DAA	ECN6944DAA	ECN6948DAA	AN16NN0D

Starters do not include heater packs. Select 2 cartons of 3 heater packs (2 overload relays — 1 for each motor). Heater Pack Selection, **Page 16-6**.

① All Type 12 enclosures are standardized with external reset. For internal reset, order Modification Code **R5**.
② Type 12 enclosure is without safety door interlock.
③ Circuitry arranged for double-pole pilot devices.
④ All duplexes come standard with alternator. To remove, add Modification Code **D12**.
⑤ The Catalog Numbers listed in the Type 4X column are for Type 4X 304-Grade Stainless Steel, as indicated by the seventh digit **4**. Example: ECN6904AAA. To order Type 4X 316-Grade Stainless Steel, change that digit to **9**. To order Type 4 Painted Steel, change that digit to **3**. To order Nonmetallic, change that digit to **5**. For details on these Alternate Enclosures, see **Tab 14**.
⑥ Requires 2 starters.

Cover Control ..... **Page 8-18**
Other Magnet Coils ..... **Page 8-17**
Dimensions ..... **Page 15-9**
Accessories ..... **Page 16-4**
Modifications ..... **Page 16-40**
Technical Data ..... **Page 18-7**

Table 8-18. Class ECN70 — Combination Duplex Pump Panels with Automatic Alternator — Circuit Breaker ④⑤

NEMA Size	Motor Voltage	Max. hp Rating	Magnet Coil Voltage ①	Circuit Breaker Type	Type 1 General Purpose Catalog Number	Type 3R Rainproof Catalog Number	Type 4X ⑥ Watertight & Dust-Tight Stainless Steel Catalog Number	Type 12 Dust-Tight Industrial External Reset ②③ Catalog Number	Component Starter (Open) ⑦ Catalog Number
0	200	1	208	HMCPE 7A	ECN7001EAC	ECN7002EAC	ECN7004EAC	ECN7008EAC	AN16BN0EC
		3		HMCPE 15A	ECN7001EAD	ECN7002EAD	ECN7004EAD	ECN7008EAD	
	230	1	240	HMCPE 7A	ECN7001BAC	ECN7002BAC	ECN7004BAC	ECN7008BAC	AN16BN0BC
		3		HMCPE 15A	ECN7001BAD	ECN7002BAD	ECN7004BAD	ECN7008BAD	
	460	3/4	480	HMCPE 3A	ECN7001CAB	ECN7002CAB	ECN7004CAB	ECN7008CAB	AN16BN0CC
		2		HMCPE 7A	ECN7001CAC	ECN7002CAC	ECN7004CAC	ECN7008CAC	
		5		HMCPE 15A	ECN7001CAD	ECN7002CAD	ECN7004CAD	ECN7008CAD	
	575	1	600	HMCP 3A	ECN7001DAB	ECN7002DAB	ECN7004DAB	ECN7008DAB	AN16BN0DC
		3		HMCP 7A	ECN7001DAC	ECN7002DAC	ECN7004DAC	ECN7008DAC	
		3		HMCP 15A	ECN7001DAD	ECN7002DAD	ECN7004DAD	ECN7008DAD	
1	200	1	208	HMCPE 7A	ECN7011EAC	ECN7012EAC	ECN7014EAC	ECN7018EAC	AN16DN0EB
		2		HMCPE 15A	ECN7011EAD	ECN7012EAD	ECN7014EAD	ECN7018EAD	
		7-1/2		HMCPE 30A	ECN7011EAE	ECN7012EAE	ECN7014EAE	ECN7018EAE	
	230	1	240	HMCPE 7A	ECN7011BAC	ECN7012BAC	ECN7014BAC	ECN7018BAC	AN16DN0BB
		2		HMCPE 15A	ECN7011BAD	ECN7012BAD	ECN7014BAD	ECN7018BAD	
		7-1/2		HMCPE 30A	ECN7011BAE	ECN7012BAE	ECN7014BAE	ECN7018BAE	
	460	3/4	480	HMCPE 3A	ECN7011CAB	ECN7012CAB	ECN7014CAB	ECN7018CAB	AN16DN0CB
		2		HMCPE 7A	ECN7011CAC	ECN7012CAC	ECN7014CAC	ECN7018CAC	
		5		HMCPE 15A	ECN7011CAD	ECN7012CAD	ECN7014CAD	ECN7018CAD	
		10		HMCPE 30A	ECN7011CAE	ECN7012CAE	ECN7014CAE	ECN7018CAE	
	575	1	600	HMCP 3A	ECN7011DAB	ECN7012DAB	ECN7014DAB	ECN7018DAB	AN16DN0DB
		3		HMCP 7A	ECN7011DAC	ECN7012DAC	ECN7014DAC	ECN7018DAC	
		7-1/2		HMCP 15A	ECN7011DAD	ECN7012DAD	ECN7014DAD	ECN7018DAD	
		10		HMCP 30A	ECN7011DAE	ECN7012DAE	ECN7014DAE	ECN7018DAE	
2	200	10	208	HMCPE 50A	ECN7021EAF	ECN7022EAF	ECN7024EAF	ECN7028EAF	AN16GN0EB
	230	15	240		ECN7021BAF	ECN7022BAF	ECN7024BAF	ECN7028BAF	AN16GN0BB
	460	25	480		ECN7021CAF	ECN7022CAF	ECN7024CAF	ECN7028CAF	AN16GN0CB
	575	25	600	HMCP 50A	ECN7021DAF	ECN7022DAF	ECN7024DAF	ECN7028DAF	AN16GN0DB
3	200	25	208	HMCPE 100A	ECN7031EAG	ECN7032EAG	ECN7034EAG	ECN7038EAG	AN16KN0E
	230	30	240		ECN7031BAG	ECN7032BAG	ECN7034BAG	ECN7038BAG	AN16KN0B
	460	50	480		ECN7031CAG	ECN7032CAG	ECN7034CAG	ECN7038CAG	AN16KN0C
	575	50	600	HMCP 100A	ECN7031DAI	ECN7032DAI	ECN7034DAI	ECN7038DAI	AN16KN0D
4	200	40	208	HMCP 150A	ECN7041EAH	ECN7042EAH	ECN7044EAH	ECN7048EAH	AN16NN0E
	230	50	240		ECN7041BAH	ECN7042BAH	ECN7044BAH	ECN7048BAH	AN16NN0B
	460	100	480		ECN7041CAH	ECN7042CAH	ECN7044CAH	ECN7048CAH	AN16NN0C
	575	100	600		ECN7041DAH	ECN7042DAH	ECN7044DAH	ECN7048DAH	AN16NN0D

Starters do not include heater packs. Select 2 cartons of 3 heater packs (2 overload relays — 1 for each motor). Heater Pack Selection, **Page 16-6**.

① For 200V and 575V motors — Starters with 120V coil (for separate control) are available. To order, substitute the letter **A** for the eighth character of the listed Catalog Number.
② All Type 12 enclosures are standardized with external reset. For internal reset, order Modification Code **R5**.
③ Type 12 enclosure is without safety door interlock.
④ Circuitry arranged for double-pole pilot devices.
⑤ All duplexes come standard with alternator. To remove, add Modification Code **D12**.
⑥ The Catalog Numbers listed in the Type 4X column are for Type 4X 304-Grade Stainless Steel, as indicated by the seventh digit **4**. Example: ECN7004EAC. To order Type 4X 316-Grade Stainless Steel, change that digit to **9**. To order Type 4 Painted Steel, change that digit to **3**. To order Nonmetallic, change that digit to **5**. For details on these Alternate Enclosures, see **Tab 14**.
⑦ Requires 2 starters.

Cover Control ..... **Page 8-18**
Other Magnet Coils ..... **Page 8-17**
Dimensions ..... **Page 15-9**
Accessories ..... **Page 16-4**
Modifications ..... **Page 16-40**
Technical Data ..... **Page 18-7**

HVAC Control

Contents

Description *Page*

Freedom Full Voltage HVAC Starters
Product Family Overview
Product Description 9-2
Catalog Number Selection 9-3
Cover Control 9-3
Combination Starters — Fusible and Non-fusible
Product Selection 9-4
Combination Starters — Circuit Breaker
Product Selection 9-5
Wiring Diagrams 9-6
Dimensions 9-7

9

HVAC Starter

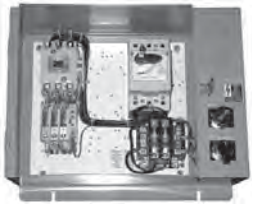

HVAC Panel with Bimetallic Overload and HMCPE

9

Product Description

Eaton's Cutler-Hammer® ECH Line of combination starters was developed specifically for customers in the HVAC industry. The ECH product combines the requirements of motor overload and short circuit protection into one package. These starters were designed to be compact and to offer the basic features prevalent in the HVAC marketplace. The line includes the Freedom Line of FVNR NEMA Starters with either (C306) interchangeable heaters or solid-state overload relays, a CPT, HOA and Red Pilot Light.

Features

- Compact Design
- Type 1 Enclosure
- CPT Available
- Bimetal or solid-state overload options
- 30 mm Pilot Devices
  - HOA
  - Red RUN Pilot
- Disconnect Switch or HMCPE
- NEMA Sizes 0 – 2

Interchangeable Heater Features

C306 Overload Relays are designed for use with CE or CN non-reversing and reversing contactors. Four sizes are available for overload protection up to 144A.

- Selectable Manual or Automatic Reset operation.
- Interchangeable Heater Packs adjustable ±24% to match motor FLA and calibrated for use with 1.0 and 1.15 service factor motors. Heater packs for 32A overload relay will mount in 75A overload relay — useful in derating applications such as jogging.
- Class 10 or 20 heater packs.
- Load lugs built into relay base.
- Bimetallic, ambient compensated operated. Trip free mechanism.
- Electrically isolated NO-NC contacts (pull RESET button to test). (Electrical Ratings see **Table 18-15** on **Page 18-12**).
- Overload trip indication.
- Shrouded or fingerproof terminals to reduce possibility of electrical shock.
- Meets UL 508 single-phasing requirements.
- UL listed, CSA certified, NEMA compliance.

Solid-State Overload Features

Eaton's Cutler-Hammer Motor Control Center and Enclosed Control Product Lines now offer the latest in motor protection through the use of the solid-state overload relay. It provides higher accuracy, less heat dissipation and enhanced protection through the use of state-of-the-art microelectronic packaging technology. Solid-state overload relays are standard with Trip Class 5, 10, 20 and 30 Manual/Automatic Reset. Key features of the solid-state overload relays include:

- Standard Version: Selectable trip class (5, 10, 20, 30) with Selectable Manual or Auto Reset
- Broad 5:1 FLA range
- Self-Powered Design, will accept AC voltages from 12 – 690V 50/60 Hz
- Ambient Temperature Compensation
- Low Heat Generation
- Phase Loss Protection
- Phase Unbalance Protection
- Electrically Isolated 1NO-1NC Contacts (Push-to-Test)
- Trip Status Indicator
- FLA Range of 0.1 – 1500 Amps

Standards and Certifications

Note: See **Page 18-2** for additional information on Standards and Certifications that apply to all Cutler-Hammer Enclosed Control products.

- UL Listed
- cUL Listed (indicates appropriate CSA Standard investigation)
- ABS Type Approval

Catalog Number Selection

Table 9-1. Freedom HVAC Starters Catalog Numbering System

E C H 2 2 0 1 A H ___ - ___ ___ ___

Design Type
H = HVAC Control

Class	Table
16 = Combination Non-reversing Starter — Fusible Disconnect	9-4
18 = Combination Reversing Starter — Fusible Disconnect with CPT	9-5
22 = Combination Non-reversing Starter — Circuit Breaker	9-6
24 = Combination Non-reversing Starter — Circuit Breaker with CPT	9-7

NEMA Size
0 = Size 0
1 = Size 1
2 = Size 2

Enclosure Type
1 = Type 1

Magnet Coil/CPT Voltage	
Without CPT	**CPT Primary / Secondary**
A = 120V/60 Hz	**B** = 240V / 120V
B = 240V/60 Hz	**C** = 480V / 120V
C = 460V/60 Hz	**D** = 575V / 120V
D = 575V/60 Hz	**E** = 208V / 120V
E = 208V/60 Hz	**S** = 480V / 24V
T = 24V/60 Hz	**T** = 600V / 24V

Cover Control
See **Table 9-2**

Disconnect (Fuse Block or MCP)

Modifications
See **Table 9-3**

Cover Control

Table 9-2. Pilot Device Factory Installation

Description	Position 9 Alpha
None	**A**
HAND/OFF/AUTO	**H**
HAND/OFF/AUTO with Red RUN Pilot	**J**

Modification Codes

Table 9-3. HVAC Modification Codes

Modification	Catalog Number Suffix	Description
Auxiliary Contacts	**A27**	1NO — Wired
	A28	1NC — Wired
	A29	1NO 1NC — Wired
Solid-State Overloads	**R61/A**	Size 0 — 0.1 – 0.5A
	R61/B	Size 0 — 0.2 – 2.0A
	R61/C	Size 0 — 1.0 – 5.0A
	R61/D	Size 1 — 1.6 – 8.0A
	R61/E	Size 1 — 6.4 – 32A
	R61/F	Size 2 — 9.0 – 45A
Heaters	**H5/D1**	.254 – .411A
	H5/D2	.375 – .607A
	H5/D3	.560 – .907A
	H5/D4	.814 – 1.32A
Heaters, continued	**H5/D5**	1.20 – 1.96A
	H5/D6	1.79 – 2.90A
	H5/D7	2.15 – 3.49A
	H5/D8	3.23 – 5.23A
	H5/D9	4.55 – 7.40A
	H5/D10	6.75 – 11.0A
	H5/D11	9.14 – 14.0A
	H5/D12	14.0 – 22.8A
	H5/D13	18.7 – 30.7A
	H5/D14	23.5 – 38.5A
Labels and Timers	**L10**	Carton Label
	T1	Pneumatic Timer (.1 – 30 sec. max.)
	T2	Pneumatic Timer (10 – 180 sec. max.)
	T4	Solid-State ON Delay Timer (1 – 30 secs.)
	T5	Solid-State ON Delay Timer (30 – 300 secs.)

Product Selection

Table 9-4. Class ECH16 — Combination Non-reversing Starter — Fusible Disconnect

NEMA Size	Motor Voltage	Max. hp	Coil Voltage	Type 1 Catalog Number ①	Type 1 with HOA Catalog Number ①	Type 1 with HOA & Red RUN Pilot Catalog Number ①	Component Starter (Open) Catalog Number ②
0	230	3	120 240 460	ECH1601AA_ ECH1601BA_ ECH1601CA_	ECH1601AH_ ECH1601BH_ ECH1601CH_	ECH1601AJ_ ECH1601BJ_ ECH1601CJ_	AN16BN0AC AN16BN0BC AN16BN0CC
	480	5	575 208 24	ECH1601DA_ ECH1601EA_ ECH1601TA_	ECH1601DH_ ECH1601EH_ ECH1601TH_	ECH1601DJ_ ECH1601EJ_ ECH1601TJ_	AN16BN0DC AN16BN0EC AN16BN0TC
1	230	7-1/2	120 240 460	ECH1611AA_ ECH1611BA_ ECH1611CA_	ECH1611AH_ ECH1611BH_ ECH1611CH_	ECH1611AJ_ ECH1611BJ_ ECH1611CJ_	AN16DN0AB AN16DN0BB AN16DN0CB
	480	10	575 208 24	ECH1611DA_ ECH1611EA_ ECH1611TA_	ECH1611DH_ ECH1611EH_ ECH1611TH_	ECH1611DJ_ ECH1611EJ_ ECH1611TJ_	AN16DN0DB AN16DN0EB AN16DN0TB
2	230	15	120 240 460	ECH1621AA_ ECH1621BA_ ECH1621CA_	ECH1621AH_ ECH1621BH_ ECH1621CH_	ECH1621AJ_ ECH1621BJ_ ECH1621CJ_	AN16GN0AB AN16GN0BB AN16GN0CB
	480	25	575 208 24	ECH1621DA_ ECH1621EA_ ECH1621TA_	ECH1621DH_ ECH1621EH_ ECH1621TH_	ECH1621DJ_ ECH1621EJ_ ECH1621TJ_	AN16GN0DB AN16GN0EB AN16GN0TB

① A "–" denotes Catalog Numbers are incomplete without the Fuse Block Code. To complete the Catalog Number, select the appropriate Code from the following table:

Rating	Fuse Block Code
No Block	**A**
30A/600V "J"	**C**
60A/600V "J"	**E** (Size 2 Only)

② If the solid-state overload option is selected, refer to Publication Number TD03408001E, Relay for MCCs and Enclosed Control Technical Data, for component selection.

Table 9-5. Class ECH18 — Combination Reversing Starter — Fusible Disconnect with CPT

NEMA Size	Motor Voltage	Max. hp	Coil Voltage	Type 1 Catalog Number ③	Type 1 with HOA Catalog Number ③	Type 1 with HOA & Red RUN Pilot Catalog Number ③	Component Starter (Open) Catalog Number ④
0	230	3	120 240 460	ECH1801BA_ ECH1801CA_ ECH1801DA_	ECH1801BH_ ECH1801CH_ ECH1801DH_	ECH1801BJ_ ECH1801CJ_ ECH1801DJ_	AN16BN0AC AN16BN0BC AN16BN0CC
	480	5	575 208 24	ECH1801EA_ ECH1801SA_ ECH1801TA_	ECH1801EH_ ECH1801SH_ ECH1801TH_	ECH1801EJ_ ECH1801SJ_ ECH1801TJ_	AN16BN0DC AN16BN0EC AN16BN0TC
1	230	7-1/2	120 240 460	ECH1811BA_ ECH1811CA_ ECH1811DA_	ECH1811BH_ ECH1811CH_ ECH1811DH_	ECH1811BJ_ ECH1811CJ_ ECH1811DJ_	AN16DN0AB AN16DN0BB AN16DN0CB
	480	10	575 208 24	ECH1811EA_ ECH1811SA_ ECH1811TA_	ECH1811EH_ ECH1811SH_ ECH1811TH_	ECH1811EJ_ ECH1811SJ_ ECH1811TJ_	AN16DN0DB AN16DN0EB AN16DN0TB
2	230	15	120 240 460	ECH1821BA_ ECH1821CA_ ECH1821DA_	ECH1821BH_ ECH1821CH_ ECH1821DH_	ECH1821BJ_ ECH1821CJ_ ECH1821DJ_	AN16GN0AB AN16GN0BB AN16GN0CB
	480	25	575 208 24	ECH1821EA_ ECH1821SA_ ECH1821TA_	ECH1821EH_ ECH1821SH_ ECH1821TH_	ECH1821EJ_ ECH1821SJ_ ECH1821TJ_	AN16GN0DB AN16GN0EB AN16GN0TB

③ A "–" denotes Catalog Numbers are incomplete without the Fuse Block Code. To complete the Catalog Number, select the appropriate Code from the following table:

Rating	Fuse Block Code
No Block	**A**
30A/600V "J"	**C**
60A/600V "J"	**E** (Size 2 Only)

④ If the solid-state overload option is selected, refer to Publication Number TD03408001E, Relay for MCCs and Enclosed Control Technical Data, for component selection.

Cover Control ..... **Page 9-3**
Modifications ..... **Page 9-3**
Wiring Diagrams ..... **Page 9-6**
Dimensions ..... **Page 9-7**

Product Selection

Table 9-6. Class ECH22 — Combination Non-reversing Starter — Circuit Breaker

NEMA Size	Motor Voltage	Max. hp	Coil Voltage	Type 1	Type 1 with HOA	Type 1 with HOA & Red RUN Pilot	Component Starter (Open)
				Catalog Number ①	Catalog Number ①	Catalog Number ①	Catalog Number ②
0	230	3	120 240 460	ECH2201AA_ ECH2201BA_ ECH2201CA_	ECH2201AH_ ECH2201BH_ ECH2201CH_	ECH2201AJ_ ECH2201BJ_ ECH2201CJ_	AN16BN0AC AN16BN0BC AN16BN0CC
	480	5	575 208 24	ECH2201DA_ ECH2201EA_ ECH2201TA_	ECH2201DH_ ECH2201EH_ ECH2201TH_	ECH2201DJ_ ECH2201EJ_ ECH2201TJ_	AN16BN0DC AN16BN0EC AN16BN0TC
1	230	7-1/2	120 240 460	ECH2211AA_ ECH2211BA_ ECH2211CA_	ECH2211AH_ ECH2211BH_ ECH2211CH_	ECH2211AJ_ ECH2211BJ_ ECH2211CJ_	AN16DN0AB AN16DN0BB AN16DN0CB
	480	10	575 208 24	ECH2211DA_ ECH2211EA_ ECH2211TA_	ECH2211DH_ ECH2211EH_ ECH2211TH_	ECH2211DJ_ ECH2211EJ_ ECH2211TJ_	AN16DN0DB AN16DN0EB AN16DN0TB
2	230	15	120 240 460	ECH2221AA_ ECH2221BA_ ECH2221CA_	ECH2221AH_ ECH2221BH_ ECH2221CH_	ECH2221AJ_ ECH2221BJ_ ECH2221CJ_	AN16GN0AB AN16GN0BB AN16GN0CB
	480	25	575 208 24	ECH2221DA_ ECH2221EA_ ECH2221TA_	ECH2221DH_ ECH2221EH_ ECH2221TH_	ECH2221DJ_ ECH2221EJ_ ECH2221TJ_	AN16GN0DB AN16GN0EB AN16GN0TB

① A "–" denotes Catalog Numbers are incomplete without the Magnetic Circuit Protector Code. To complete the Catalog Number, select the appropriate Code from the following table:

Rating	Magnetic Circuit Protector Code	Rating	Magnetic Circuit Protector Code
—	A	15 Amp	D
3 Amp	B	30 Amp	E
7 Amp	C	50 Amp	F

② If the solid-state overload option is selected, refer to Publication Number TD03408001E, Relay for MCCs and Enclosed Control Technical Data, for component selection.

Table 9-7. Class ECH24 — Combination Non-reversing Starter — Circuit Breaker with CPT

NEMA Size	Motor Voltage	Max. hp	Coil Voltage	Type 1	Type 1 with HOA	Type 1 with HOA & Red RUN Pilot	Component Starter (Open)
				Catalog Number ③	Catalog Number ③	Catalog Number ③	Catalog Number ④
0	230	3	120 240 460	ECH2401BA_ ECH2401CA_ ECH2401DA_	ECH2401BH_ ECH2401CH_ ECH2401DH_	ECH2401BJ_ ECH2401CJ_ ECH2401DJ_	AN16BN0AC AN16BN0BC AN16BN0CC
	480	5	575 208 24	ECH2401EA_ ECH2401SA_ ECH2401TA_	ECH2401EH_ ECH2401SH_ ECH2401TH_	ECH2401EJ_ ECH2401SJ_ ECH2401TJ_	AN16BN0DC AN16BN0EC AN16BN0TC
1	230	7-1/2	120 240 460	ECH2411BA_ ECH2411CA_ ECH2411DA_	ECH2411BH_ ECH2411CH_ ECH2411DH_	ECH2411BJ_ ECH2411CJ_ ECH2411DJ_	AN16DN0AB AN16DN0BB AN16DN0CB
	480	10	575 208 24	ECH2411EA_ ECH2411SA_ ECH2411TA_	ECH2411EH_ ECH2411SH_ ECH2411TH_	ECH2411EJ_ ECH2411SJ_ ECH2411TJ_	AN16DN0DB AN16DN0EB AN16DN0TB
2	230	15	120 240 460	ECH2421BA_ ECH2421CA_ ECH2421DA_	ECH2421BH_ ECH2421CH_ ECH2421DH_	ECH2421BJ_ ECH2421CJ_ ECH2421DJ_	AN16GN0AB AN16GN0BB AN16GN0CB
	480	25	575 208 24	ECH2421EA_ ECH2421SA_ ECH2421TA_	ECH2421EH_ ECH2421SH_ ECH2421TH_	ECH2421EJ_ ECH2421SJ_ ECH2421TJ_	AN16GN0DB AN16GN0EB AN16GN0TB

③ A "–" denotes Catalog Numbers are incomplete without the Magnetic Circuit Protector Code. To complete the Catalog Number, select the appropriate Code from the following table:

Rating	Magnetic Circuit Protector Code	Rating	Magnetic Circuit Protector Code
—	A	15 Amp	D
3 Amp	B	30 Amp	E
7 Amp	C	50 Amp	F

④ If the solid-state overload option is selected, refer to Publication Number TD03408001E, Relay for MCCs and Enclosed Control Technical Data, for component selection.

Cover Control ..... Page 9-3
Modifications ..... Page 9-3
Wiring Diagrams ..... Page 9-6
Dimensions ..... Page 9-7

Wiring Diagrams

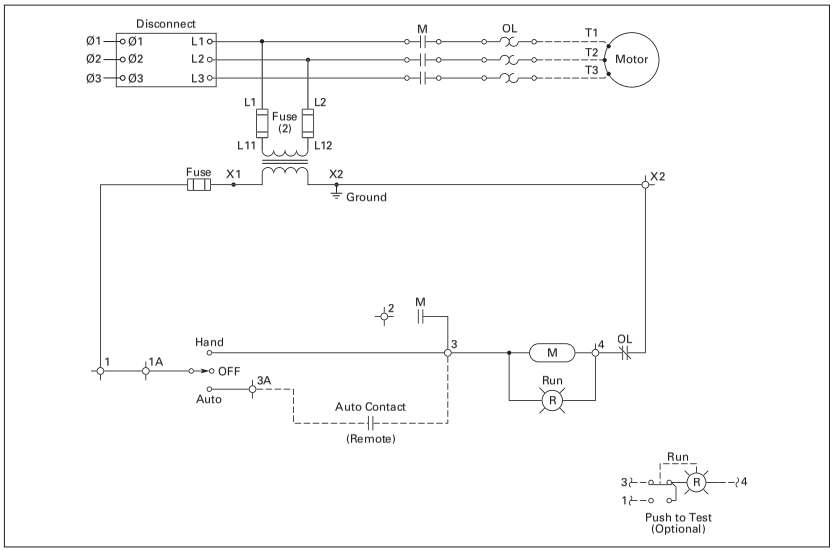

Figure 9-1. HVAC Combination Starter with CPT, HOA and Indicating Light

Dimensions

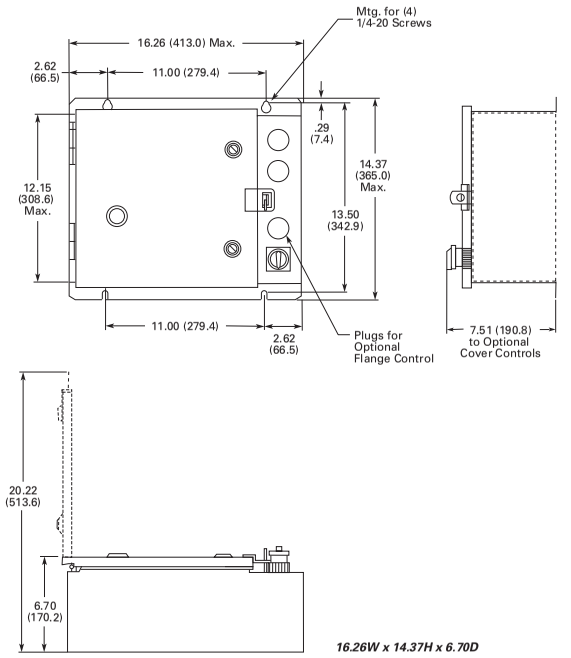

Figure 10. Box 7, Type 1 — Approximate Dimensions in Inches (mm)

NEMA Vacuum Break Contactors & Starters

Contents

Description *Page*

Special Purpose and Mining Rating
Product Family Overview
Product Description **10-2**
Catalog Number Selection **10-4**
Cover Control **10-5**
Contactors
Product Selection **10-6**
Non-combination Starters
Product Selection **10-7**
Combination Starters
Product Selection **10-9**
Wiring Diagrams **10-15**

10

NEMA Vacuum Break Starter

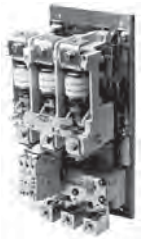

Cat. No. AV10GNOA or V200M5CJC Vacuum Break Starter

10

Product Description

- 3-Phase Magnetic
- 3-Pole Full Voltage
- Non-reversing and Reversing
- 600 and 1500V AC Maximum
- Starters with Interchangeable Heater OLR

Application Description

Eaton's Cutler-Hammer Vacuum Contactors are designed for starting and controlling three-phase, 50/60 Hz, AC motors. Motor full load current should not exceed the contactor current rating. These contactors are built in several versions — the nameplate on a specific contactor states the authorized ratings.

Low voltage vacuum contactors can be applied to a wide range of voltages up to 1500V. These applications include full voltage control of three-phase squirrel cage motors, primary control of low voltage wound rotor motors and circuit switching for low voltage capacitors for power factor improvement.

Features/Benefits

- Rugged, compact, lightweight
- Quiet operation
- Front removable coil and auxiliaries
- Electrical and mechanical interlocking capability
- Low chop interrupters eliminate the need for surge suppressors
- Contact wear indication allows for planned maintenance program
- Long service life
- Manual push-to-reset button on Sizes 5 and 6
- Freedom overload
- SSOL

Operation

The contact structures of these vacuum break contactors are located inside sealed ceramic tubes which have been evacuated of air. Any arc occurring across the contacts upon opening is automatically extinguished because ionized air is not available to sustain it — the arc breaks when the current passes through zero. The arc typically does not survive beyond the first half cycle once the contacts begin to separate. The large arc chutes normally associated with starters of this size are not required. The ceramic tube with the moving and stationary contacts enclosed is called a **vacuum interrupter** or a **bottle**, and there is one bottle for each pole of the contactor. A metal bellows (like a small, circular accordion) within the bottle allows the moving contact to be closed and pulled open from the outside without leaking air into the bottle. Both the bellows and the metal-to-ceramic seals of these state-of-the-art bottles have been refined to the point where the possibility of loss of vacuum has been virtually eliminated.

Contact Force and Altitude

A vacuum contactor is affected by atmospheric pressure on the bellows of the vacuum bottles. Up to an altitude of 6600 feet, the contactor is designed to tolerate normal variations in barometric pressure. If the contactor is to be operated above 6600 feet above sea level, consult Eaton.

Standards and Certifications

Note: See **Page 18-2** for additional information on Standards and Certifications that apply to all Cutler-Hammer Enclosed Control products.

- UL listed
- cUL Listed (indicates appropriate CSA Standand investigation)
- CE Mark available
- ABS Type Approved

Catalog Number Selection

Table 10-1. NEMA Vacuum Break Catalog Numbering System

E C V 0 5 5 1 A A A -

Design

V = Vacuum

Class	Table
01 = Non-reversing Contactor — 3-Pole	**10-5**
02 = Reversing Contactor — 3-Pole	**10-6**
05 = Non-combination Non-reversing Starters	**10-9**
06 = Non-combination Reversing Starters	**10-10**
07 = Non-combination Non-reversing Starters with CPT	**10-11**
16 = Combination Non-reversing Starters — Fusible and Non-fusible Disconnect	**10-12**
17 = Combination Reversing Starters — Fusible and Non-fusible Disconnect	**10-13**
18 = Combination Non-reversing Starters — Fusible and Non-fusible Disconnect with CPT	**10-14**
22 = Combination Non-reversing Starters — Circuit Breaker	**10-15**
23 = Combination Reversing Starters — Circuit Breaker	**10-16**
24 = Combination Non-reversing Starters — Circuit Breaker with CPT	**10-17**

NEMA Size

4
5
6

Enclosure Type

1 = 1 — General Purpose
2 = 3R — Rainproof
3 = 4 — Painted Steel
4 = 4X — 304-Grade Stainless Steel
8 = 12 — Dust-Tight
9 = 4X — 316-Grade Stainless Steel

Coil Voltage or Motor Voltage

A = 120V	**D** = 575V
B = 230V	**E** = 200V
C = 460V	**V** = 380V

Cover Control

Non-rev. Starters see **Table 10-3**
Rev. Starters see **Table 10-4**

Contactors

3 = 3 Poles

Disconnect Fuse Clip Ratings

A = None	**L** = 400A/600V R
H = 200A/250V R	**M** = 600A/250V R
J = 200A/600V R	**N** = 600A/600V R
K = 400A/250V R	

Breaker Ratings

A = None	**K** = 400A
H = 150A	**L** = 600A
J = 250A	**M** = 800A

Modification Codes

(See **Page 16-40**)

Table 10-2. Alternate "Open" Catalog Numbers

Listed "Open" Catalog Number	Alternate "Open" Catalog Number
AV10FNOA	V200M4CJC
AV10GNOAB	V200M5CJC
AV10JNOAB	V200M6CJC
CV10FN3A	V201K4CJ
CV10GN3A	V201K5CJZ1
CV10JN3A	V201K6CJZ1

Note: Above are NEMA rated devices for applications up to 600V. For Special Purpose devices up to 1500V consult Eaton.

Cover Control

Non-Reversing

Flange Control Kits

For on-the-job conversion of Type 1, 3R, 4X and 12 enclosed starters. Knockouts are provided on the Type 1 flange. Type 3R, 4X and 12 have prepunched holes with removable hole plugs.

Factory Installed

To order factory installed pilot devices, change the 9th character of the Catalog Number to the alpha shown in the table to the right. Example: to order an **ECV0548AAA** with START/STOP push-buttons and a red pilot light, change the **A** to a **C**, i.e. ECV0548A**C**A.

Reversing

Flange Control Kits

For on-the-job conversion of Type1, 3R, 4X and 12 enclosed starters. Knockouts are provided on the Type1 flange. Type 3R, 4X and 12 have prepunched holes with removable hole plugs.

Factory Installed

To order factory installed pilot devices, change the 9th character of the Catalog Number to the alpha shown in the table to the right. Example: to order an **ECV1748AAH** with FOR/REV/STOP pushbuttons and 2 red pilot lights, change the **A** to a **C**, i.e. ECV1748A**C**H.

Table 10-3. Non-reversing Cover Control Field Kits and Factory Installation

Description	Factory Installed Flange Control	Field Installation Kits	
	Position 9 Alpha	Type 1 Non-combination ②	All Others ③
		Catalog Number	Catalog Number
No Cover Mounted Pilot Devices	A	C400GK0	—
START/STOP Pushbuttons	B	C400GK1	C400T1
with Red RUN Pilot Light	C	C400GK12 ①	—
with Red RUN/Green OFF Lights	D	C400GK16 ①	—
ON/OFF Pushbuttons	E	—	C400T2
with Red RUN Pilot Light	F	—	—
with Red RUN/Green OFF Lights	G	—	—
HAND/OFF/AUTO Selector Switch	H	C400GK3	C400T12
with Red RUN Pilot Light	J	C400GK32 ①	—
with Red RUN/Green OFF Lights	K	C400GK36 ①	—
START Pushbutton	L	—	C400T3
ON Pushbutton	M	—	C400T4
OFF Pushbutton	N	—	C400T5
Red RUN Pilot Light	P	C400GK42 ①	C400T9 ①
Green OFF	Q	C400GK41 ①	C400T10 ①
Red RUN/Green OFF Pilot Lights	R	C400GK46 ①	C400T11 ①
START/STOP Selector Switch	S	—	C400T13
with Red RUN Pilot Light	T	—	—
with Red RUN/Green OFF Lights	U	—	—
ON/OFF Selector Switch	V	—	C400T14
with Red RUN Pilot Light	W	—	—
with Red RUN/Green OFF Lights	X	—	—

① Add Code Letter from table below to Catalog Number for voltage — Kits only. Example: C400T9**B**.

Rating	Code Letter	Rating	Code Letter	Rating	Code Letter
120V 60 Hz	A	240V 60 Hz	B	480V 60 Hz	C
208V 60 Hz	E	380V 50 Hz	L	600V 60 Hz	D

② Type 1 Non-combination, Size 4.

③ Type 1 Non-combination, Sizes 5 & 6; Type 3R, 4X, 12 Non-combination, all Sizes; All Combination Control.

Table 10-4. Reversing Cover Control Field Kits and Factory Installation

Description	Factory Installed Flange Control	Field Installation Kits	
	Position 9 Alpha	Type 1 Non-combination ⑤	All Others ⑥
		Catalog Number	Catalog Number
No Cover Mounted Pilot Devices	A	C400GK0	—
FOR/REV/STOP Pushbuttons	B	C400GR1	C400T6
with 2 Red Pilot Lights	C	C400GR14 ④	—
with 2 Red/1 Green Pilot Lights	D	—	—
UP/STOP/DOWN Pushbuttons	E	C400GR2	—
with 2 Red Pilot Lights	F	C400GR24 ④	—
FOR/OFF/REV Selector Switch	H	—	C400T15
with 2 Red Pilot Lights	J	—	—
with 2 Red/1 Green Pilot Lights	K	—	—
Two Red Pilot Lights	P	C400GK44 ④	⑦
One Green Pilot Light	Q	C400GK41 ④	C400T10 ④
Two Red/One Green Pilot Lights	R	—	—
OPEN/OFF/CLOSE Selector Switch	V	—	C400T16
with 2 Red Pilot Lights	W	—	—
with 2 Red/1 Green Pilot Lights	X	—	—

④ Add Code Letter from table below to Catalog Number for voltage — Kits only. Example: C400T9**B**.

Rating	Code Letter	Rating	Code Letter	Rating	Code Letter
120V 60 Hz	A	240V 60 Hz	B	480V 60 Hz	C
208V 60 Hz	E	380V 50 Hz	L	600V 60 Hz	D

⑤ Type 1 Non-combination, Size 4.

⑥ Type 1 Non-combination, Sizes 5 & 6; Type 3R, 4X, 12 Non-combination, all Sizes; All Combination Control.

⑦ Order quantity 2 of **C400T9**④.

Product Selection

Table 10-5. Class ECV01 — Non-reversing Contactor — 3-Pole

NEMA Size	Enclosed Ampere Rating	Motor Voltage	Maximum hp Rating	Magnet Coil Voltage ①	Type 1 General Purpose	Type 3R Rainproof	Type 4X Watertight & Dust-Tight Stainless Steel ②	Type 12 Dust-Tight Industrial	Component Contactor (Open) ③
					Catalog Number	Catalog Number	Catalog Number	Catalog Number	Catalog Number
4	135	—	—	110/120	ECV0141A3A	ECV0142A3A	ECV0144A3A	ECV0148A3A	CV10FN3A
		200	40						
		230	50						
		380	75						
		460	100						
		575	100						
5	270	—	—	110/120	ECV0151A3A	ECV0152A3A	ECV0154A3A	ECV0158A3A	CV10GN3A
		200	75						
		230	100						
		380	150						
		460	200						
		575	200						
6	540	—	—	110/120	ECV0161A3A	ECV0162A3A	ECV0164A3A	ECV0168A3A	CV10JN3A
		200	150						
		230	200						
		380	300						
		460	400						
		575	400						

① Wired for separate control.

② These are the Catalog Numbers for Type 4X 304-Grade Stainless Steel, as indicated by the seventh digit **4**. Example: ECV0144A3A. To order Type 4X 316-Grade Stainless Steel, change that digit to **9**. To order Type 4 Painted Steel, change that digit to **3**. To order Nonmetallic, change that digit to **5**. For details on these Alternate Enclosures, see **Tab 14**.

③ Alternate Catalog Numbers for those listed can be found in **Table 10-2** on **Page 10-4**.

Table 10-6. Class ECV02 — Reversing Contactor — 3-Pole

NEMA Size	Enclosed Ampere Rating	Motor Voltage	Maximum hp Rating	Magnet Coil Voltage ④	Type 1 General Purpose	Type 3R Rainproof	Type 4X Watertight & Dust-Tight Stainless Steel ⑤	Type 12 Dust-Tight Industrial	Component Contactor (Open) ⑥
					Catalog Number	Catalog Number	Catalog Number	Catalog Number	Catalog Number
4	135	—	—	110/120	ECV0241A3A	ECV0242A3A	ECV0244A3A	ECV0248A3A	V211K4CJ
		200	40						
		230	50						
		380	75						
		460	100						
		575	100						
5	270	—	—	110/120	ECV0251A3A	ECV0252A3A	ECV0254A3A	ECV0258A3A	V211K5CJZ1
		200	75						
		230	100						
		380	150						
		460	200						
		575	200						
6	540	—	—	110/120	ECV0261A3A	ECV0262A3A	ECV0264A3A	ECV0268A3A	V211K6CJZ1
		200	150						
		230	200						
		380	300						
		460	400						
		575	400						

④ Wired for separate control.

⑤ These are the Catalog Numbers for Type 4X 304-Grade Stainless Steel, as indicated by the seventh digit **4**. Example: ECV0244A31. To order Type 4X 316-Grade Stainless Steel, change that digit to **9**. To order Type 4 Painted Steel, change that digit to **3**. To order Nonmetallic, change that digit to **5**. For details on these Alternate Enclosures, see **Tab 14**.

⑥ Alternate Catalog Numbers for those listed can be found in **Table 10-2** on **Page 10-4**.

Field Modification Kits

Auxiliary Electrical Contacts

Two Type J auxiliary contacts may be mounted on each side to provide four auxiliary, isolated 600V, 10A double break contacts for use in control circuits.

Table 10-7. Auxiliary Contacts

Contact Arrangement	Catalog Number
1NO-1NC	J11
2NO	J20
2NC	J02

Table 10-8. Horizontal Mechanical Interlock

Size	Catalog Number
4	180C113G04
5	180C113G12
6	180C113G13

Cover Control ..... **Page 10-5**
Wiring Diagrams ..... **Page 10-15**
Dimensions ..... **Page 15-10**
Accessories, Kits ..... **Page 16-39**
Modifications ..... **Page 16-40**
Technical Data ..... **Page 18-47**

Product Selection

Table 10-9. Class ECV05 — Non-combination Non-reversing Starter

NEMA Size	Enclosed Ampere Rating	Motor Voltage	Maximum hp Rating	Magnet Coil Voltage ①	Type 1 General Purpose	Type 3R Rainproof	Type 4X Watertight & Dust-Tight Stainless Steel ②	Type 12 Dust-Tight Industrial External Reset ④	Component Starter (Open) ③
					Catalog Number	Catalog Number	Catalog Number	Catalog Number	Catalog Number
4	135	—	—	110/120	ECV0541AAA	ECV0542AAA	ECV0544AAA	ECV0548AAA	AV10FNOA
		200	40						
		230	50						
		380	75						
		460	100						
		575	100						
5	270	—	—	110/120	ECV0551AAA	ECV0552AAA	ECV0554AAA	ECV0558AAA	AV10GNOAB
		200	75						
		230	100						
		380	150						
		460	200						
		575	200						
6	540	—	—	110/120	ECV0561AAA	ECV0562AAA	ECV0564AAA	ECV0568AAA	AV10JNOAB
		200	150						
		230	200						
		380	300						
		460	400						
		575	400						

Starters do not include heater packs. Select 1 carton of 3 heater packs. Heater pack selection, **Page 16-6**.
Starters with Electronic Overload, see **Page 16-45** of Modification Codes.

① Wired for separate control.
② These are the Catalog Numbers for Type 4X 304-Grade Stainless Steel, as indicated by the seventh digit **4**. Example: ECV0544AAA. To order Type 4X 316-Grade Stainless Steel, change that digit to **9**. To order Type 4 Painted Steel, change that digit to **3**. To order Nonmetallic, change that digit to **5**. For details on these Alternate Enclosures, see **Tab 14**.
③ Alternate Catalog Numbers for those listed can be found in **Table 10-2** on **Page 10-4**.
④ All Type 12 enclosures are standardized with external reset. For internal reset, order Modification Code **R5**.

Table 10-10. Class ECV06 — Non-combination Reversing Starter

NEMA Size	Enclosed Ampere Rating	Motor Voltage	Maximum hp Rating	Magnet Coil Voltage ⑤	Type 1 General Purpose	Type 3R Rainproof	Type 4X Watertight & Dust-Tight Stainless Steel ⑥	Type 12 Dust-Tight Industrial External Reset ⑦	Component Starter (Open)
					Catalog Number	Catalog Number	Catalog Number	Catalog Number	Catalog Number
4	135	—	—	110/120	ECV0641AAA	ECV0642AAA	ECV0644AAA	ECV0648AAA	V210M4CJC
		200	40						
		230	50						
		380	75						
		460	100						
		575	100						
5	270	—	—	110/120	ECV0651AAA	ECV0652AAA	ECV0654AAA	ECV0658AAA	V210M5CJC
		200	75						
		230	100						
		380	150						
		460	200						
		575	200						
6	540	—	—	110/120	ECV0661AAA	ECV0662AAA	ECV0664AAA	ECV0668AAA	V210M6CJC
		200	150						
		230	200						
		380	300						
		460	400						
		575	400						

Starters do not include heater packs. Select 1 carton of 3 heater packs. Heater pack selection, **Page 16-6**.
Starters with Electronic Overload, see **Page 16-45** of Modification Codes.

⑤ Wired for separate control.
⑥ These are the Catalog Numbers for Type 4X 304-Grade Stainless Steel, as indicated by the seventh digit **4**. Example: ECV0644AAA. To order Type 4X 316-Grade Stainless Steel, change that digit to **9**. To order Type 4 Painted Steel, change that digit to **3**. To order Nonmetallic, change that digit to **5**. For details on these Alternate Enclosures, see **Tab 14**.
⑦ All Type 12 enclosures are standardized with external reset. For internal reset, order Modification Code **R5**.

Cover Control ..... **Page 10-5**
Wiring Diagrams ..... **Page 10-15**
Dimensions ..... **Page 15-10**
Accessories, Kits ..... **Page 16-39**
Modifications ..... **Page 16-40**
Technical Data ..... **Page 18-47**

Table 10-11. Class ECV07 — Non-combination Non-reversing Starter with CPT

NEMA Size	Enclosed Ampere Rating	Motor Voltage	Maximum hp Rating	Magnet Coil Voltage	Type 1 General Purpose	Type 3R Rainproof	Type 4X Watertight & Dust-Tight Stainless Steel ①	Type 12 Dust-Tight Industrial External Reset ③	Component Starter (Open) ②
					Catalog Number	Catalog Number	Catalog Number	Catalog Number	Catalog Number
4	135	200	40	110/120	ECV0741EAA	ECV0742EAA	ECV0744EAA	ECV0748EAA	AV10FNOA
		230	50		ECV0741BAA	ECV0742BAA	ECV0744BAA	ECV0748BAA	
		380	75		ECV0741VAA	ECV0742VAA	ECV0744VAA	ECV0748VAA	
		460	100		ECV0741CAA	ECV0742CAA	ECV0744CAA	ECV0748CAA	
		575	100		ECV0741DAA	ECV0742DAA	ECV0744DAA	ECV0748DAA	
5	270	200	75	110/120	ECV0751EAA	ECV0752EAA	ECV0754EAA	ECV0758EAA	AV10GNOAB
		230	100		ECV0751BAA	ECV0752BAA	ECV0754BAA	ECV0758BAA	
		380	150		ECV0751VAA	ECV0752VAA	ECV0754VAA	ECV0758VAA	
		460	200		ECV0751CAA	ECV0752CAA	ECV0754CAA	ECV0758CAA	
		575	200		ECV0751DAA	ECV0752DAA	ECV0754DAA	ECV0758DAA	
6	540	200	150	110/120	ECV0761EAA	ECV0762EAA	ECV0764EAA	ECV0768EAA	AV10JNOAB
		230	200		ECV0761BAA	ECV0762BAA	ECV0764BAA	ECV0768BAA	
		380	300		ECV0761VAA	ECV0762VAA	ECV0764VAA	ECV0768VAA	
		460	400		ECV0761CAA	ECV0762CAA	ECV0764CAA	ECV0768CAA	
		575	400		ECV0761DAA	ECV0762DAA	ECV0764DAA	ECV0768DAA	

Starters do not include heater packs. Select 1 carton of 3 heater packs. Heater pack selection, **Page 16-6**.
Starters with Electronic Overload, see **Page 16-45** of Modification Codes.

① These are the Catalog Numbers for Type 4X 304-Grade Stainless Steel, as indicated by the seventh digit **4**. Example: ECV0744EAA. To order Type 4X 316-Grade Stainless Steel, change that digit to **9**. To order Type 4 Painted Steel, change that digit to **3**. To order Nonmetallic, change that digit to **5**. For details on these Alternate Enclosures, see **Tab 14**.
② Alternate Catalog Numbers for those listed can be found in **Table 10-2** on **Page 10-4**.
③ All Type 12 enclosures are standardized with external reset. For internal reset, order Modification Code **R5**.

Cover Control ..... **Page 10-5**
Wiring Diagrams ..... **Page 10-15**
Dimensions ..... **Page 15-10**
Accessories, Kits ..... **Page 16-39**
Modifications ..... **Page 16-40**
Technical Data ..... **Page 18-47**

Product Selection

Table 10-12. Class ECV16 — Combination Non-reversing Starter — Fusible and Non-fusible Disconnect

NEMA Size	Motor Voltage	Max. hp Rating Dual Element Fuses	Magnet Coil Voltage ①	Fuse Clip Amperes/ Disconnect Amperes	Type 1 General Purpose	Type 3R Rainproof	Type 4X Watertight & Dust-Tight Stainless Steel ②	Type 12 Dust-Tight Industrial External Reset ④⑤	Component Starter (Open) ③
					Catalog Number	Catalog Number	Catalog Number	Catalog Number	Catalog Number
Fusible									
4	200 230 380 460 575	40 50 75 100 100	110/120	200A	**ECV1641AAH** **ECV1641AAH** **ECV1641AAJ** **ECV1641AAJ** **ECV1641AAJ**	**ECV1642AAH** **ECV1642AAH** **ECV1642AAJ** **ECV1642AAJ** **ECV1642AAJ**	**ECV1644AAH** **ECV1644AAH** **ECV1644AAJ** **ECV1644AAJ** **ECV1644AAJ**	**ECV1648AAH** **ECV1648AAH** **ECV1648AAJ** **ECV1648AAJ** **ECV1648AAJ**	**AV10FNOA**
5	200 230 380 460 575	75 100 150 200 200	110/120	400A	**ECV1651AAK** **ECV1651AAK** **ECV1651AAL** **ECV1651AAL** **ECV1651AAL**	**ECV1652AAK** **ECV1652AAK** **ECV1652AAL** **ECV1652AAL** **ECV1652AAL**	**ECV1654AAK** **ECV1654AAK** **ECV1654AAL** **ECV1654AAL** **ECV1654AAL**	**ECV1658AAK** **ECV1658AAK** **ECV1658AAL** **ECV1658AAL** **ECV1658AAL**	**AV10GNOA**
6	200 230 380 460 575	150 200 300 400 400	110/120	600A	**ECV1661AAM** **ECV1661AAM** **ECV1661AAN** **ECV1661AAN** **ECV1661AAN**	**ECV1662AAM** **ECV1662AAM** **ECV1662AAN** **ECV1662AAN** **ECV1662AAN**	**ECV1664AAM** **ECV1664AAM** **ECV1664AAN** **ECV1664AAN** **ECV1664AAN**	**ECV1668AAM** **ECV1668AAM** **ECV1668AAN** **ECV1668AAN** **ECV1668AAN**	**AV10JNOA**
Non-fusible									
4	— 200 230 380 460 575	— 40 50 75 100 100	110/120	200A	**ECV1641AAA**	**ECV1642AAA**	**ECV1644AAA**	**ECV1648AAA**	**AV10FNOA**
5	— 200 230 380 460 575	— 75 100 150 200 200	110/120	400A	**ECV1651AAA**	**ECV1652AAA**	**ECV1654AAA**	**ECV1658AAA**	**AV10GNOA**
6	— 200 230 380 460 575	— 150 200 300 400 400	110/120	600A	**ECV1661AAA**	**ECV1662AAA**	**ECV1664AAA**	**ECV1668AAA**	**AV10JNOA**

Starters do not include heater packs. Select 1 carton of 3 heater packs. Heater pack selection, **Page 16-6**.
Starters with Electronic Overload, see **Page 16-45** of Modification Codes.

① Wired for separate control.
② These are the Catalog Numbers for Type 4X 304-Grade Stainless Steel, as indicated by the seventh digit **4**. Example: ECV1644AAH. To order Type 4X 316-Grade Stainless Steel, change that digit to **9**. To order Type 4 Painted Steel, change that digit to **3**. To order Nonmetallic, change that digit to **5**. For details on these Alternate Enclosures, see **Tab 14**.
③ Alternate Catalog Numbers for those listed can be found in **Table 10-2** on **Page 10-4**.
④ All Type 12 enclosures are standardized with external reset. For internal reset, order Modification Code **R5**.
⑤ Type 12 enclosure is without safety door interlock. When safety door interlock is required, add Modification Code **E11**.

Type 12 Non-reversing Vacuum Starter with Fused Disconnect

Cover Control ..... **Page 10-5**
Wiring Diagrams ..... **Page 10-15**
Dimensions ..... **Page 15-10**
Accessories, Kits ..... **Page 16-39**
Modifications ..... **Page 16-40**
Technical Data ..... **Page 18-47**

Table 10-13. Class ECV17 — Combination Reversing Starter — Fusible and Non-fusible Disconnect

NEMA Size	Motor Voltage	Max. hp Rating Dual Element Fuses	Magnet Coil Voltage	Fuse Clip Amperes/ Disconnect Amperes	Type 1 General Purpose	Type 3R Rainproof	Type 4X Watertight & Dust-Tight Stainless Steel ①	Type 12 Dust-Tight Industrial External Reset ②③	Component Starter (Open)
					Catalog Number	Catalog Number	Catalog Number	Catalog Number	Catalog Number
Fusible									
4	200 230 380 460 575	40 50 75 100 100	110/120	200A	**ECV1741AAH** **ECV1741AAH** **ECV1741AAJ** **ECV1741AAJ** **ECV1741AAJ**	**ECV1742AAH** **ECV1742AAH** **ECV1742AAJ** **ECV1742AAJ** **ECV1742AAJ**	**ECV1744AAH** **ECV1744AAH** **ECV1744AAJ** **ECV1744AAJ** **ECV1744AAJ**	**ECV1748AAH** **ECV1748AAH** **ECV1748AAJ** **ECV1748AAJ** **ECV1748AAJ**	**V210M4CJC**
5	200 230 380 460 575	75 100 150 200 200	110/120	400A	**ECV1751AAK** **ECV1751AAK** **ECV1751AAL** **ECV1751AAL** **ECV1751AAL**	**ECV1752AAK** **ECV1752AAK** **ECV1752AAL** **ECV1752AAL** **ECV1752AAL**	**ECV1754AAK** **ECV1754AAK** **ECV1754AAL** **ECV1754AAL** **ECV1754AAL**	**ECV1758AAK** **ECV1758AAK** **ECV1758AAL** **ECV1758AAL** **ECV1758AAL**	**V210M5CJC**
6	200 230 380 460 575	150 200 300 400 400	110/120	600A	**ECV1761AAM** **ECV1761AAM** **ECV1761AAN** **ECV1761AAN** **ECV1761AAN**	**ECV1762AAM** **ECV1762AAM** **ECV1762AAN** **ECV1762AAN** **ECV1762AAN**	**ECV1764AAM** **ECV1764AAM** **ECV1764AAN** **ECV1764AAN** **ECV1764AAN**	**ECV1768AAM** **ECV1768AAM** **ECV1768AAN** **ECV1768AAN** **ECV1768AAN**	**V210M6CJC**
Non-fusible									
4	— 200 230 380 460 575	— 40 50 75 100 100	110/120	200A	**ECV1741AAA**	**ECV1742AAA**	**ECV1744AAA**	**ECV1748AAA**	**V210M4CJC**
5	— 200 230 380 460 575	— 75 100 150 200 200	110/120	400A	**ECV1751AAA**	**ECV1752AAA**	**ECV1754AAA**	**ECV1758AAA**	**V210M5CJC**
6	— 200 230 380 460 575	— 150 200 300 400 400	110/120	600A	**ECV1761AAA**	**ECV1762AAA**	**ECV1764AAA**	**ECV1768AAA**	**V210M6CJC**

Starters do not include heater packs. Select 1 carton of 3 heater packs. Heater pack selection, **Page 16-6**.
Starters with Electronic Overload, see **Page 16-45** of Modification Codes.

① These are the Catalog Numbers for Type 4X 304-Grade Stainless Steel, as indicated by the seventh digit **4**. Example: ECV1744AAH. To order Type 4X 316-Grade Stainless Steel, change that digit to **9**. To order Type 4 Painted Steel, change that digit to **3**. To order Nonmetallic, change that digit to **5**. For details on these Alternate Enclosures, see **Tab 14**.
② All Type 12 enclosures are standardized with external reset. For internal reset, order Modification Code **R5**.
③ Type 12 enclosure is without safety door interlock. When safety door interlock is required, add Modification Code **E11**.

Cover Control ..... **Page 10-5**
Wiring Diagrams ..... **Page 10-15**
Dimensions ..... **Page 15-10**
Accessories, Kits ..... **Page 16-39**
Modifications ..... **Page 16-40**
Technical Data ..... **Page 18-47**

Table 10-14. Class ECV18 — Combination Non-reversing Starter — Fusible and Non-fusible Disconnect with CPT

NEMA Size	Motor Voltage	Max. hp Rating Dual Element Fuses	Magnet Coil Voltage	Fuse Clip Amperes/ Disconnect Amperes	Type 1 General Purpose	Type 3R Rainproof	Type 4X Watertight & Dust-Tight Stainless Steel ①	Type 12 Dust-Tight Industrial External Reset ③④	Component Starter (Open) ②
					Catalog Number	Catalog Number	Catalog Number	Catalog Number	Catalog Number
Fusible									
4	200 230 380 460 575	40 50 75 100 100	110/120	200A	ECV1841EAH ECV1841BAH ECV1841VAJ ECV1841CAJ ECV1841DAJ	ECV1842EAH ECV1842BAH ECV1842VAJ ECV1842CAJ ECV1842DAJ	ECV1844EAH ECV1844BAH ECV1844VAJ ECV1844CAJ ECV1844DAJ	ECV1848EAH ECV1848BAH ECV1848VAJ ECV1848CAJ ECV1848DAJ	AV10FNOA
5	200 230 380 460 575	75 100 150 200 200	110/120	400A	ECV1851EAK ECV1851BAK ECV1851VAL ECV1851CAL ECV1851DAL	ECV1852EAK ECV1852BAK ECV1852VAL ECV1852CAL ECV1852DAL	ECV1854EAK ECV1854BAK ECV1854VAL ECV1854CAL ECV1854DAL	ECV1858EAK ECV1858BAK ECV1858VAL ECV1858CAL ECV1858DAL	AV10GNOA
6	200 230 380 460 575	150 200 300 400 400	110/120	600A	ECV1861EAM ECV1861BAM ECV1861VAN ECV1861CAN ECV1861DAN	ECV1862EAM ECV1862BAM ECV1862VAN ECV1862CAN ECV1862DAN	ECV1864EAM ECV1864BAM ECV1864VAN ECV1864CAN ECV1864DAN	ECV1868EAM ECV1868BAM ECV1868VAN ECV1868CAN ECV1868DAN	AV10JNOA
Non-fusible									
4	200 230 380 460 575	40 50 75 100 100	110/120	200A	ECV1841EAA ECV1841BAA ECV1841VAA ECV1841CAA ECV1841DAA	ECV1842EAA ECV1842BAA ECV1842VAA ECV1842CAA ECV1842DAA	ECV1844EAA ECV1844BAA ECV1844VAA ECV1844CAA ECV1844DAA	ECV1848EAA ECV1848BAA ECV1848VAA ECV1848CAA ECV1848DAA	AV10FNOA
5	200 230 380 460 575	75 100 150 200 200	110/120	400A	ECV1851EAA ECV1851BAA ECV1851VAA ECV1851CAA ECV1851DAA	ECV1852EAA ECV1852BAA ECV1852VAA ECV1852CAA ECV1852DAA	ECV1854EAA ECV1854BAA ECV1854VAA ECV1854CAA ECV1854DAA	ECV1858EAA ECV1858BAA ECV1858VAA ECV1858CAA ECV1858DAA	AV10GNOA
6	200 230 380 460 575	150 200 300 400 400	110/120	600A	ECV1861EAA ECV1861BAA ECV1861VAA ECV1861CAA ECV1861DAA	ECV1862EAA ECV1862BAA ECV1862VAA ECV1862CAA ECV1862DAA	ECV1864EAA ECV1864BAA ECV1864VAA ECV1864CAA ECV1864DAA	ECV1868EAA ECV1868BAA ECV1868VAA ECV1868CAA ECV1868DAA	AV10JNOA

Starters do not include heater packs. Select 1 carton of 3 heater packs. Heater pack selection, **Page 16-6**.
Starters with Electronic Overload, see **Page 16-45** of Modification Codes.

① These are the Catalog Numbers for Type 4X 304-Grade Stainless Steel, as indicated by the seventh digit **4**. Example: ECV1844EAH. To order Type 4X 316-Grade Stainless Steel, change that digit to **9**. To order Type 4 Painted Steel, change that digit to **3**. To order Nonmetallic, change that digit to **5**. For details on these Alternate Enclosures, see **Tab 14**.
② Alternate Catalog Numbers for those listed can be found in **Table 10-2** on **Page 10-4**.
③ All Type 12 enclosures are standardized with external reset. For internal reset, order Modification Code **R5**.
④ Type 12 enclosure is without safety door interlock. When safety door interlock is required, add Modification Code **E11**.

Type 12 Non-reversing Vacuum Starter with HMCP

Cover Control ..... **Page 10-5**
Wiring Diagrams ..... **Page 10-15**
Dimensions ..... **Page 15-10**
Accessories, Kits ..... **Page 16-39**
Modifications ..... **Page 16-40**
Technical Data ..... **Page 18-47**

Table 10-15. Class ECV22 — Combination Non-reversing Starter — Circuit Breaker

NEMA Size	Motor Voltage	Max. hp Rating	Magnet Coil Voltage ①	Circuit Breaker Type	Type 1 General Purpose	Type 3R Rainproof	Type 4X Watertight & Dust-Tight Stainless Steel ②	Type 12 Dust-Tight Industrial External Reset ④⑤	Component Starter (Open) ③
					Catalog Number	Catalog Number	Catalog Number	Catalog Number	Catalog Number
4	200 230 380 460 575	40 50 75 100 100	110/120	HMCP 150A	ECV2241AAH	ECV2242AAH	ECV2244AAH	ECV2248AAH	AV10FNOA
5	200 230 460 575	60 75 150 200	110/120	HMCP 250A	ECV2251AAJ	ECV2252AAJ	ECV2254AAJ	ECV2258AAJ	AV10GNOA
	200 230 380 460	75 100 150 200	110/120	HMCP 400A	ECV2251AAK	ECV2252AAK	ECV2254AAK	ECV2258AAK	AV10GNOA
6	200 230 460 575	100 150 300 300	110/120	HMCP 600A	ECV2261AAL	ECV2262AAL	ECV2264AAL	ECV2268AAL	AV10JNOA
	230 460 575	200 400 400	110/120	MD 800A	ECV2261AAM	ECV2262AAM	ECV2264AAM	ECV2268AAM	AV10JNOA

Starters do not include heater packs. Select 1 carton of 3 heater packs. Heater pack selection, **Page 16-6**.
Starters with Electronic Overload, see **Page 16-45** of Modification Codes.

① Wired for separate control.
② These are the Catalog Numbers for Type 4X 304-Grade Stainless Steel, as indicated by the seventh digit **4**. Example: ECV2244AAH. To order Type 4X 316-Grade Stainless Steel, change that digit to **9**. To order Type 4 Painted Steel, change that digit to **3**. To order Nonmetallic, change that digit to **5**. For details on these Alternate Enclosures, see **Tab 14**.
③ Alternate Catalog Numbers for those listed can be found in **Table 10-2** on **Page 10-4**.
④ All Type 12 enclosures are standardized with external reset. For internal reset, order Modification Code **R5**.
⑤ Type 12 enclosure is without safety door interlock. When safety door interlock is required, add Modification Code **E11**.

Cover Control ..... **Page 10-5**
Wiring Diagrams ..... **Page 10-15**
Dimensions ..... **Page 15-10**
Accessories, Kits ..... **Page 16-39**
Modifications ..... **Page 16-40**
Technical Data ..... **Page 18-47**

Table 10-16. Class ECV23 — Combination Reversing Starter — Circuit Breaker

NEMA Size	Motor Voltage	Max. hp Rating	Magnet Coil Voltage ①	Circuit Breaker Type	Type 1 General Purpose	Type 3R Rainproof	Type 4X Watertight & Dust-Tight Stainless Steel ②	Type 12 Dust-Tight Industrial External Reset ③④	Component Starter (Open)
					Catalog Number	Catalog Number	Catalog Number	Catalog Number	Catalog Number
4	200 230 380 460 575	40 50 75 100 100	110/120	HMCP 150A	**ECV2341AAH**	**ECV2342AAH**	**ECV2344AAH**	**ECV2348AAH**	**V210M4CJC**
5	200 230 460 575	60 75 150 200	110/120	HMCP 250A	**ECV2351AAJ**	**ECV2352AAJ**	**ECV2354AAJ**	**ECV2358AAJ**	**V210M5CJC**
	200 230 380 460	75 100 150 200	110/120	HMCP 400A	**ECV2351AAK**	**ECV2352AAK**	**ECV2354AAK**	**ECV2358AAK**	**V210M5CJC**
6	200 230 460 575	100 150 300 300	110/120	HMCP 600A	**ECV2361AAL**	**ECV2362AAL**	**ECV2364AAL**	**ECV2368AAL**	**V210M6CJC**
	230 460 575	200 400 400	110/120	MD 800A	**ECV2361AAM**	**ECV2362AAM**	**ECV2364AAM**	**ECV2368AAM**	**V210M6CJC**

Starters do not include heater packs. Select 1 carton of 3 heater packs. Heater pack selection, **Page 16-6**.
Starters with Electronic Overload, see **Page 16-45** of Modification Codes.

① Wired for separate control.
② These are the Catalog Numbers for Type 4X 304-Grade Stainless Steel, as indicated by the seventh digit **4**. Example: ECV2344AAH. To order Type 4X 316-Grade Stainless Steel, change that digit to **9**. To order Type 4 Painted Steel, change that digit to **3**. To order Nonmetallic, change that digit to **5**. For details on these Alternate Enclosures, see **Tab 14**.
③ All Type 12 enclosures are standardized with external reset. For internal reset, order Modification Code **R5**.
④ Type 12 enclosure is without safety door interlock. When safety door interlock is required, add Modification Code **E11**.

Cover Control ..... **Page 10-5**
Wiring Diagrams ..... **Page 10-15**
Dimensions ..... **Page 15-10**
Accessories, Kits ..... **Page 16-39**
Modifications ..... **Page 16-40**
Technical Data ..... **Page 18-47**

Table 10-17. Class ECV24 — Combination Non-reversing Starter — Circuit Breaker with CPT

NEMA Size	Motor Voltage	Max. hp Rating	Magnet Coil Voltage	Circuit Breaker Type	Type 1 General Purpose	Type 3R Rainproof	Type 4X Watertight & Dust-Tight Stainless Steel ①	Type 12 Dust-Tight Industrial External Reset ②④	Component Starter (Open) ③
					Catalog Number	Catalog Number	Catalog Number	Catalog Number	Catalog Number
4	200 230 380 460 575	40 50 75 100 100	110/120	HMCP 150A	**ECV2441EAH** **ECV2441BAH** **ECV2441VAH** **ECV2441CAH** **ECV2441DAH**	**ECV2442EAH** **ECV2442BAH** **ECV2442VAH** **ECV2442CAH** **ECV2442DAH**	**ECV2444EAH** **ECV2444BAH** **ECV2444VAH** **ECV2444CAH** **ECV2444DAH**	**ECV2448EAH** **ECV2448BAH** **ECV2448VAH** **ECV2448CAH** **ECV2448DAH**	**AV10FNOA**
5	200 230 460 575	60 75 150 200	110/120	HMCP 250A	**ECV2451EAJ** **ECV2451BAJ** **ECV2451CAJ** **ECV2451DAJ**	**ECV2452EAJ** **ECV2452BAJ** **ECV2452CAJ** **ECV2452DAJ**	**ECV2454EAJ** **ECV2454BAJ** **ECV2454CAJ** **ECV2454DAJ**	**ECV2458EAJ** **ECV2458BAJ** **ECV2458CAJ** **ECV2458DAJ**	**AV10GNOA**
	200 230 380 460	75 100 150 200	110/120	HMCP 400A	**ECV2451EAK** **ECV2451BAK** **ECV2451VAK** **ECV2451CAK**	**ECV2452EAK** **ECV2452BAK** **ECV2452VAK** **ECV2452CAK**	**ECV2454EAK** **ECV2454BAK** **ECV2454VAK** **ECV2454CAK**	**ECV2458EAK** **ECV2458BAK** **ECV2458VAK** **ECV2458CAK**	**AV10GNOA**
6	200 230 460 575	100 150 300 300	110/120	HMCP 600A	**ECV2461EAL** **ECV2461BAL** **ECV2461CAL** **ECV2461DAL**	**ECV2462EAL** **ECV2462BAL** **ECV2462CAL** **ECV2462DAL**	**ECV2464EAL** **ECV2464BAL** **ECV2464CAL** **ECV2464DAL**	**ECV2468EAL** **ECV2468BAL** **ECV2468CAL** **ECV2468DAL**	**AV10JNOA**
	230 460 575	200 400 400	110/120	MD 800A	**ECV2461BAM** **ECV2461CAM** **ECV2461DAM**	**ECV2462BAM** **ECV2462CAM** **ECV2462DAM**	**ECV2464BAM** **ECV2464CAM** **ECV2464DAM**	**ECV2468BAM** **ECV2468CAM** **ECV2468DAM**	**AV10JNOA**

Starters do not include heater packs. Select 1 carton of 3 heater packs. Heater pack selection, **Page 16-6**.
Starters with Electronic Overload, see **Page 16-45** of Modification Codes.

① These are the Catalog Numbers for Type 4X 304-Grade Stainless Steel, as indicated by the seventh digit **4**. Example: ECV2444EAH. To order Type 4X 316-Grade Stainless Steel, change that digit to **9**. To order Type 4 Painted Steel, change that digit to **3**. To order Nonmetallic, change that digit to **5**. For details on these Alternate Enclosures, see **Tab 14**.
② All Type 12 enclosures are standardized with external reset. For internal reset, order Modification Code **R5**.
③ Alternate Catalog Numbers for those listed can be found in **Table 10-2** on **Page 10-4**.
④ Type 12 enclosure is without safety door interlock. When safety door interlock is required, add Modification Code **E11**.

Cover Control ..... **Page 10-5**
Wiring Diagrams ..... **Page 10-15**
Dimensions ..... **Page 15-10**
Accessories, Kits ..... **Page 16-39**
Modifications ..... **Page 16-40**
Technical Data ..... **Page 18-47**

Wiring Diagrams

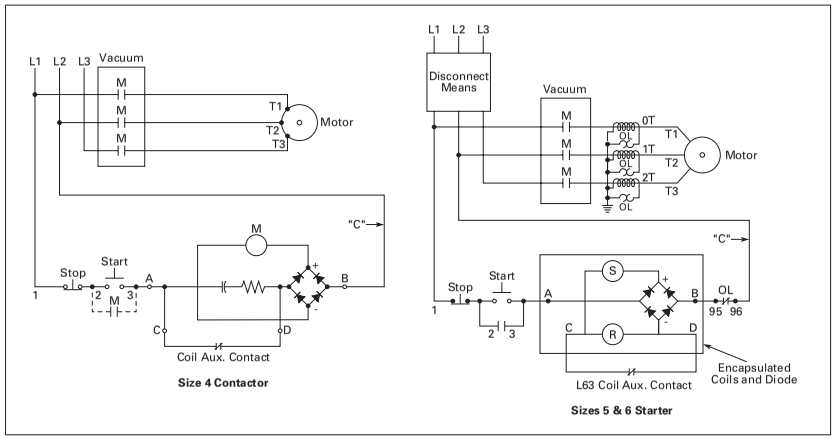

Figure 10-1. Typical Wiring Diagrams

Type 7/9 Hazardous Location Starters

Contents

Description *Page*

NEMA Cast Aluminum Enclosed Starters
Product Family Overview
Application Description **11-2**
Catalog Number Selection **11-4**
Cover Control **11-5**
***IT.* Electro-Mechanical Non-combination**
Product Selection **11-6**
***IT.* Electro-Mechanical Combination**
Product Selection **11-9**
Freedom Full Voltage Non-combination
Product Selection **11-12**
Freedom Full Voltage Combination
Product Selection **11-15**
Other Hazardous Location Control **11-18**
Dimensions **11-19**
Wiring Diagrams **11-22**

Type 7/9 Explosion Proof Enclosed Control

Hazardous Location Enclosure

Application Description

Eaton's Cutler-Hammer Combination and Non-combination Hazardous Location Cast Aluminum Motor Starters are used in areas where hazardous materials are handled or stored. These units provide disconnecting means, under voltage protection, circuit protection and motor running protection.

Features

- 65,000 AIC-UL Classified — highest interrupt rated enclosure in the industry
- Copper-free cast aluminum
- Precision machine flame path between box and cover
- Bolt-on slotted mounting feet
- Stainless steel block hinges
- Stainless steel, captive Quad-Lead cover bolts (disengaged in 1-1/2 turns)
- External stainless steel breaker operating handle
- Breaker and operator shafts are stainless steel
- Ground lug package and installation instructions for termination of ground wire enclosed
- Four point control terminal block, NEMA 1B with wire markers
- Breaker operators can be locked in the ON or OFF position (combination starters only)
- Four plugged 3/4" NPSM outlets drilled and tapped for control devices
- Standard outlets top and bottom
- Plugged 1/2" outlets top and bottom for breather/drain
- Components are mounted on a galvanized steel removable pan
- O-ring gasket ensures watertight integrity

Standard Materials

- Bodies and covers: Copper-free aluminum
- Cover bolts: Stainless steel
- O-ring: Neoprene
- Hinges: Stainless steel

Finishes

- Bodies and covers: Corrosion resistant grey epoxy power coat inside and outside standard to provide Type 4X

Standards and Certifications

Note: See **Page 18-2** for additional information on Standards and Certifications that apply to all Cutler-Hammer Enclosed Control products.

- UL Classified — Standard 886
  File #104565
  - Class I, Groups B, C & D
  - Class II, Groups E, F & G
  - Class III
  - Type 4, 4X, 7 & 9
  - Zone 1, IIB + H2
- CSA Certified — Standard C22.2
  File #28361
  - Class I, Groups B, C & D
  - Class II, Groups E, F & G
  - Class III
  - Type 4, 4X, 7 & 9
  - Zone 1, IIB + H2

Code Definitions

Class I locations require the type of explosion-proof electrical equipment where, in case of explosion, the hazardous flames would be contained. In Class II or III locations, dust, fibers and flyings are the combustible materials and it is only necessary to keep these materials out of the electrical equipment (where an arc may take place) and to maintain safe external temperatures.

A brief explanation of the three classifications covering hazardous locations follows:

Class I Locations — are those in which flammable gases or vapors are, or may be, present in the air in quantities sufficient to produce explosive or ignitable mixtures.

Class I, Div. 1 — are those where such hazardous concentrations of flammable liquids or vapors exist under normal operating conditions.

Class I, Div. 2 — are those where such hazardous concentrations of flammable liquids or vapors are handled in closed containers or closed systems.

Class II Locations — are those where the presence of combustible dust presents a fire or explosion hazard.

Class II, Div. 1 — are those where dust is suspended in the air under normal operating conditions, in quantities sufficient to produce explosive or ignitable mixtures.

Class II, Div. 2 — are those where such dust is not normally in the air, but where deposits of it accumulating on the electrical equipment will interfere with safe dissipation of heat, causing a fire hazard.

Class III Locations — are those where easily ignitable fibers or flyings are present but not likely to be suspended in the air in quantities sufficient to produce ignitable mixtures.

Class III, Div. 1 — are those where ignitable fibers or materials producing combustible flyings are handled, manufactured or used.

Class III, Div. 2 — are those where easily ignitable fibers are stored or handled (except in process or manufacture).

Further refinement created for the purpose of testing and approving electrical equipment divides Class I into four separate designations: A, B, C, D and Class II into three separate designations; E, F and G. Underwriters Laboratories test and approve electrical equipment for the following specific groups:

Class I, Group A — atmospheres containing acetylene.

Class I, Group B — atmospheres containing hydrogen, gases and vapors of equivalent hazard such as manufactured gas.

Class I, Group C — atmospheres containing ethyl-ether vapors, ethylene or cyclopropane.

Class I, Group D — atmospheres containing gasoline, hexane, naphtha, benzine, butane, propane, alcohol, acetone, benzol, lacquer solvent vapors or natural gas.

Class II, Group E — atmospheres containing metal dust, including aluminum, magnesium and their commercial alloys, and other metals of similarly hazardous characteristics.

Class II, Group F — atmospheres containing carbon black, coal or coke dust.

Class II, Group G — atmospheres containing flour, starch or grain dusts.

Catalog Number Selection

Table 11-1. Type 7/9 Hazardous Location Catalog Numbering System

E C T 2 2 1 6 B A C - A

Design

T = ***IT***. NEMA
N = Freedom NEMA
S = Soft Starter ⑥

Class	Table
05 = Type 7/9 Non-combination Non-reversing Starter	**11-5** & **11-11**
06 = Type 7/9 Non-combination Reversing Starter	**11-6** & **11-12**
07 = Type 7/9 Non-combination Starter with CPT	**11-7** & **11-13**
22 = Type 7/9 Combination Non-reversing Starter — Circuit Breaker	**11-8** & **11-14**
23 = Type 7/9 Combination Reversing Starter — Circuit Breaker	**11-9** & **11-15**
24 = Type 7/9 Combination Starter with CPT — Circuit Breaker	**11-10** & **11-16**

NEMA Size

A = Size 00	**3** = Size 3
0 = Size 0	**4** = Size 4
1 = Size 1	**5** = Size 5
2 = Size 2	

Enclosure Type

6 = Type 7/9 — Bolted

Motor Voltage/Power Supply ①②

A = 120/60 110/50
B = 240/60 220/50 Freedom; 230/60 ***IT***.
C = 480/60 440/50 Freedom; 460/60 ***IT***.
D = 600/60 550/50
E = 208/60 Freedom; 200/60 ***IT***.
Q = 24V DC ③
L = 380V/50 Hz

Cover Control

Non-rev. Starters see **Table 11-3**
Rev. Starters see **Table 11-4**

HMCP/E or Breaker Ratings

A = None	**W** = 70A	**5** = 3A ⑤
B = 3A	**G** = 100A/R3C	**6** = 7A ⑤
C = 7A	**X** = 100A/T3C	**7** = 15A ⑤
D = 15A	**H** = 150A	**8** = 30A ⑤
E = 30A	**J** = 250A	**9** = 50A ⑤
F = 50A	**K** = 400A	**I** = 100A ⑤

Solid-State ④ Overload Range — *IT*. Only

Refer to **Table 11-2**.

Modification Codes

(See **Page 16-40**)

① ***IT***: If CPT is selected, Power Supply to be 120V – 24V DC.
② Freedom: When control power transformer modification codes (**C1** – **C11**) are used or when starter class includes CPT (i.e. ECN07, 24) see table below for system voltage code.

Code	Primary	Secondary
B	240/480 – 220/440 Wired for 240V	120/60 – 110/50
C	240/480 – 220/440 Wired for 480V	120/60 – 110/50
D	600/60 – 550/50	120/60 – 110/50
E	208/60	120/60

③ Power supply omitted.
④ See **Table 11-2**, Solid-State Overload Range Codes.
⑤ Use for Sizes 0 – 3, HMCP 600V applications only.
⑥ For Soft Starter information see **Tab 6**.

Table 11-2. *IT*. Solid-State Overload Range Codes

FLA Range	Size						
	00	**0**	**1**	**2**	**3**	**4**	**5**
.25 – .80	**A**	**A**	**A**	—	—	—	—
.59 – 1.9	**B**	**B**	**B**	—	—	—	—
1.4 – 4.4	**C**	**C**	**C**	—	—	—	—
2.8 – 9.0	**D**	**D**	**D**	—	—	—	—
5.0 – 16	—	—	**F**	—	—	—	—
6.3 – 20	—	**G**	—	—	—	—	—
8.4 – 27	—	—	**H**	—	—	—	—
10 – 32	—	**J**	—	—	—	—	—
14 – 45	—	—	—	**K**	—	—	—
16 – 50	—	—	**L**	—	—	—	—
28 – 90	—	—	—	—	**M**	—	—
31 – 100	—	—	—	**N**	—	—	—
42 – 135	—	—	—	—	—	**P**	—
63 – 200	—	—	—	—	—	**R**	—
84 – 270	—	—	—	—	—	—	**S**
131 – 420	—	—	—	—	—	—	**T**

Cover Control

To order factory installed pilot devices, change the 9th character of the Catalog Number to the alpha shown in the table below. Example: to order an **ECN0516CAA** with START/STOP pushbuttons and a red pilot light, change the **A** to a **C**, i.e. ECN0516C**C**A.

Table 11-3. Non-reversing Cover Control

Description	Factory Installed Flange Control Position 9 Alpha
No Cover Mounted Pilot Devices	A
START/STOP Pushbuttons	B
with Red RUN Pilot Light	C
with Red RUN/Green OFF Lights	D
ON/OFF Pushbuttons	E
with Red RUN Pilot Light	F
with Red RUN/Green OFF Lights	G
HAND/OFF/AUTO Selector Switch	H
with Red RUN Pilot Light	J
with Red RUN/Green OFF Lights	K
START Pushbutton	L
ON Pushbutton	M
OFF Pushbutton	N
Red RUN Pilot Light	P
Green OFF Pilot Light	Q
Red RUN/Green OFF Pilot Lights	R
START/STOP Selector Switch	S
with Red RUN Pilot Light	T
with Red RUN/Green OFF Lights	U
ON/OFF Selector Switch	V
with Red RUN Pilot Light	W
with Red RUN/Green OFF Lights	X

Table 11-4. Reversing Cover Control

Description	Factory Installed Flange Control Position 9 Alpha
No Cover Mounted Pilot Devices	A
FOR/REV/STOP Pushbuttons	B
with 2 Red Pilot Lights	C
with 2 Red/1 Green Pilot Lights	D
UP/STOP/DOWN Pushbuttons	E
with 2 Red Pilot Lights	F
FOR/OFF/REV Selector Switch	H
with 2 Red Pilot Lights	J
with 2 Red/1 Green Pilot Lights	K
Two Red Pilot Lights	P
One Green Pilot Light	Q
Two Red/One Green Pilot Lights	R
OPEN/OFF/CLOSE Selector Switch	V
with 2 Red Pilot Lights	W
with 2 Red/1 Green Pilot Lights	X

Features

- Full Voltage
- 3-Phase Electromechanical
- Solid-State Overload Relay

Product Selection

Table 11-5. Class ECT05 — Type 7/9 Non-combination Non-reversing Starter

NEMA Size	Motor Voltage	Max. hp	Coil ① Voltage	3-Pole Type 7/9 Bolted Catalog Number ②	Component Starter (Open) Catalog Number ②
00	—	—	24V DC	ECT05A6QAA-_	N101BSA_3A
	200	1-1/2		ECT05A6EAA-_	
	230	1-1/2		ECT05A6BAA-_	
	460	2		ECT05A6CAA-_	
	575	2		ECT05A6DAA-_	
	380/50 Hz	1-1/2		ECT05A6LAA-_	
0	—	—	24V DC	ECT0506QAA-_	N101BS0_3A
	200	3		ECT0506EAA-_	
	230	3		ECT0506BAA-_	
	460	5		ECT0506CAA-_	
	575	5		ECT0506DAA-_	
	380/50 Hz	5		ECT0506LAA-_	
1	—	—	24V DC	ECT0516QAA-_	N101CS1_3A
	200	7-1/2		ECT0516EAA-_	
	230	7-1/2		ECT0516BAA-_	
	460	10		ECT0516CAA-_	
	575	10		ECT0516DAA-_	
	380/50 Hz	10		ECT0516LAA-_	
2	—	—	24V DC	ECT0526QAA-K	N101DS2_3A
	200	10		ECT0526EAA-K	
	230	15		ECT0526BAA-K	
	460	25		ECT0526CAA-K	
	575	25		ECT0526DAA-K	
	380/50 Hz	25		ECT0526LAA-K	
3	—	—	24V DC	ECT0536QAA-M	N101ES3_3A
	200	25		ECT0536EAA-M	
	230	30		ECT0536BAA-M	
	460	50		ECT0536CAA-M	
	575	50		ECT0536DAA-M	
	380/50 Hz	50		ECT0536LAA-M	
4	—	—	24V DC	ECT0546QAA-P	N101ES4_3A
	200	40		ECT0546EAA-P	
	230	50		ECT0546BAA-P	
	460	100		ECT0546CAA-P	
	575	100		ECT0546DAA-P	
	380/50 Hz	75		ECT0546LAA-P	
5	—	—	24V DC	ECT0556QAA-S	N101FS5_3A
	200	75		ECT0556EAA-S	
	230	100		ECT0556BAA-S	
	460	200		ECT0556CAA-S	
	575	200		ECT0556DAA-S	
	380/50 Hz	150		ECT0556LAA-S	

① All *IT.* Contactors and Starters are furnished with 24V DC coil and control power supply. The eighth digit **Q** denotes separate 24V DC control source.

② A "_" denotes Catalog Numbers are incomplete without the Solid-State Overload Range Code. To complete the Catalog Number, select the appropriate Code from the following table:

FLA Range	Size 00	0	1	2	3	4	5
.25 – .80	A	A	A	—	—	—	—
.59 – 1.9	B	B	B	—	—	—	—
1.4 – 4.4	C	C	C	—	—	—	—
2.8 – 9.0	D	D	D	—	—	—	—
5.0 – 16	—	—	F	—	—	—	—
6.3 – 20	—	G	—	—	—	—	—
8.4 – 27	—	—	H	—	—	—	—
10 – 32	—	J	—	—	—	—	—
14 – 45	—	—	—	K	—	—	—
16 – 50	—	—	L	—	—	—	—
28 – 90	—	—	—	—	M	—	—
31 – 100	—	—	—	N	—	—	—
42 – 135	—	—	—	—	—	P	—
63 – 200	—	—	—	—	—	R	—
84 – 270	—	—	—	—	—	—	S
131 – 420	—	—	—	—	—	—	T

Cover Control ..... **Page 11-5**
Dimensions ..... **Page 11-19**
Wiring Diagrams ..... **Page 11-22**
Accessories ..... **Page 16-2**
Modifications ..... **Page 16-40**
Renewal Parts ..... **Page 17-2**
Technical Data ..... **Page 18-3**

Table 11-6. Class ECT06 — Type 7/9 Non-combination Reversing Starter

NEMA Size	Motor Voltage	Max. hp	Coil ① Voltage	3-Pole Type 7/9 Bolted Catalog Number ②	Component Starter (Open) Catalog Number ②
00	—	—	24V DC	ECT06A6QAA-_	N501BSA_3A
	200	1-1/2		ECT06A6EAA-_	
	230	1-1/2		ECT06A6BAA-_	
	460	2		ECT06A6CAA-_	
	575	2		ECT06A6DAA-_	
	380/50 Hz	1-1/2		ECT06A6LAA-_	
0	—	—	24V DC	ECT0606QAA-_	N501BS0_3A
	200	3		ECT0606EAA-_	
	230	3		ECT0606BAA-_	
	460	5		ECT0606CAA-_	
	575	5		ECT0606DAA-_	
	380/50 Hz	5		ECT0606LAA-_	
1	—	—	24V DC	ECT0616QAA-_	N501CS1_3A
	200	7-1/2		ECT0616EAA-_	
	230	7-1/2		ECT0616BAA-_	
	460	10		ECT0616CAA-_	
	575	10		ECT0616DAA-_	
	380/50 Hz	10		ECT0616LAA-_	
2	—	—	24V DC	ECT0626QAA-K	N501DS2_3A
	200	10		ECT0626EAA-K	
	230	15		ECT0626BAA-K	
	460	25		ECT0626CAA-K	
	575	25		ECT0626DAA-K	
	380/50 Hz	25		ECT0626LAA-K	
3	—	—	24V DC	ECT0636QAA-M	N501ES3_3A
	200	25		ECT0636EAA-M	
	230	30		ECT0636BAA-M	
	460	50		ECT0636CAA-M	
	575	50		ECT0636DAA-M	
	380/50 Hz	50		ECT0636LAA-M	
4	—	—	24V DC	ECT0646QAA-P	N501ES4_3A
	200	40		ECT0646EAA-P	
	230	50		ECT0646BAA-P	
	460	100		ECT0646CAA-P	
	575	100		ECT0646DAA-P	
	380/50 Hz	75		ECT0646LAA-P	
5	—	—	24V DC	ECT0656QAA-S	N501FS5_3A
	200	75		ECT0656EAA-S	
	230	100		ECT0656BAA-S	
	460	200		ECT0656CAA-S	
	575	200		ECT0656DAA-S	
	380/50 Hz	75		ECT0656LAA-S	

① All *IT.* Contactors and Starters are furnished with 24V DC coil and control power supply. The eighth digit **Q** denotes separate 24V DC control source.

② A "_" denotes Catalog Numbers are incomplete without the Solid-State Overload Range Code. To complete the Catalog Number, select the appropriate Code from the following table:

FLA Range	Size 00	0	1	2	3	4	5
.25 – .80	A	A	A	—	—	—	—
.59 – 1.9	B	B	B	—	—	—	—
1.4 – 4.4	C	C	C	—	—	—	—
2.8 – 9.0	D	D	D	—	—	—	—
5.0 – 16	—	—	F	—	—	—	—
6.3 – 20	—	G	—	—	—	—	—
8.4 – 27	—	—	H	—	—	—	—
10 – 32	—	J	—	—	—	—	—
14 – 45	—	—	—	K	—	—	—
16 – 50	—	—	L	—	—	—	—
28 – 90	—	—	—	—	M	—	—
31 – 100	—	—	—	N	—	—	—
42 – 135	—	—	—	—	—	P	—
63 – 200	—	—	—	—	—	R	—
84 – 270	—	—	—	—	—	—	S
131 – 420	—	—	—	—	—	—	T

Cover Control ..... Page 11-5
Dimensions ..... Page 11-19
Wiring Diagrams ..... Page 11-22
Accessories ..... Page 16-2
Modifications ..... Page 16-40
Renewal Parts ..... Page 17-2
Technical Data ..... Page 18-3

Table 11-7. Class ECT07/ECT06 — Type 7/9 Non-combination Starter with CPT

Motor Voltage	Max. hp	Coil ① Voltage	Non-reversing: 3-Pole Type 7/9 Bolted Catalog Number ②	Non-reversing: Component Starter (Open) Catalog Number ②	Reversing: 3-Pole Type 7/9 Bolted Catalog Number ②	Reversing: Component Starter (Open) Catalog Number ②
NEMA Size — 00						
—	—	24V DC	ECT07A6QAA-_	N101BSA_3A	ECT06A6QAA-_-C1	N501BSA_3A
200	1-1/2		ECT07A6EAA-_		ECT06A6EAA-_-C1	
230	1-1/2		ECT07A6BAA-_		ECT06A6BAA-_-C1	
460	2		ECT07A6CAA-_		ECT06A6CAA-_-C1	
575	2		ECT07A6DAA-_		ECT06A6DAA-_-C1	
380/50 Hz	1-1/2		ECT07A6LAA-_		ECT06A6LAA-_-C1	
NEMA Size — 0						
—	—	24V DC	ECT0706QAA-_	N101BS0_3A	ECT0606QAA-_-C1	N501BS0_3A
200	3		ECT0706EAA-_		ECT0606EAA-_-C1	
230	3		ECT0706BAA-_		ECT0606BAA-_-C1	
460	5		ECT0706CAA-_		ECT0606CAA-_-C1	
575	5		ECT0706DAA-_		ECT0606DAA-_-C1	
380/50 Hz	5		ECT0706LAA-_		ECT0606LAA-_-C1	
NEMA Size — 1						
—	—	24V DC	ECT0716QAA-_	N101CS1_3A	ECT0616QAA-_-C1	N501CS1_3A
200	7-1/2		ECT0716EAA-_		ECT0616EAA-_-C1	
230	7-1/2		ECT0716BAA-_		ECT0616BAA-_-C1	
460	10		ECT0716CAA-_		ECT0616CAA-_-C1	
575	10		ECT0716DAA-_		ECT0616DAA-_-C1	
380/50 Hz	10		ECT0716LAA-_		ECT0616LAA-_-C1	
NEMA Size — 2						
—	—	24V DC	ECT0726QAA-K	N101DS2_3A	ECT0626QAA-K-C1	N501DS2_3A
200	10		ECT0726EAA-K		ECT0626EAA-K-C1	
230	15		ECT0726BAA-K		ECT0626BAA-K-C1	
460	25		ECT0726CAA-K		ECT0626CAA-K-C1	
575	25		ECT0726DAA-K		ECT0626DAA-K-C1	
380/50 Hz	25		ECT0726LAA-K		ECT0626LAA-K-C1	
NEMA Size — 3						
—	—	24V DC	ECT0736QAA-M	N101ES3_3A	ECT0636QAA-M-C1	N501ES3_3A
200	25		ECT0736EAA-M		ECT0636EAA-M-C1	
230	30		ECT0736BAA-M		ECT0636BAA-M-C1	
460	50		ECT0736CAA-M		ECT0636CAA-M-C1	
575	50		ECT0736DAA-M		ECT0636DAA-M-C1	
380/50 Hz	50		ECT0736LAA-M		ECT0636LAA-M-C1	
NEMA Size — 4						
—	—	24V DC	ECT0746QAA-P	N101ES4_3A	ECT0646QAA-P-C1	N501ES4_3A
200	40		ECT0746EAA-P		ECT0646EAA-P-C1	
230	50		ECT0746BAA-P		ECT0646BAA-P-C1	
460	100		ECT0746CAA-P		ECT0646CAA-P-C1	
575	100		ECT0746DAA-P		ECT0646DAA-P-C1	
380/50 Hz	75		ECT0746LAA-P		ECT0646LAA-P-C1	
NEMA Size — 5						
—	—	24V DC	ECT0756QAA-S	N101FS5_3A	ECT0656QAA-S-C1	N501FS5_3A
200	75		ECT0756EAA-S		ECT0656EAA-S-C1	
230	100		ECT0756BAA-S		ECT0656BAA-S-C1	
460	200		ECT0756CAA-S		ECT0656CAA-S-C1	
575	200		ECT0756DAA-S		ECT0656DAA-S-C1	
380/50 Hz	150		ECT0756LAA-S		ECT0656LAA-S-C1	

① All *IT.* Contactors and Starters are furnished with 24V DC coil and control power supply. The eighth digit **Q** denotes separate 24V DC control source.

② A "_" denotes Catalog Numbers are incomplete without the Solid-State Overload Range Code. To complete the Catalog Number, select the appropriate Code from the following table:

FLA Range	Size 00	0	1	2	3	4	5
.25 – .80	A	A	A	—	—	—	—
.59 – 1.9	B	B	B	—	—	—	—
1.4 – 4.4	C	C	C	—	—	—	—
2.8 – 9.0	D	D	D	—	—	—	—
5.0 – 16	—	—	F	—	—	—	—
6.3 – 20	—	G	—	—	—	—	—
8.4 – 27	—	—	H	—	—	—	—
10 – 32	—	J	—	—	—	—	—
14 – 45	—	—	—	K	—	—	—
16 – 50	—	—	L	—	—	—	—
28 – 90	—	—	—	—	M	—	—
31 – 100	—	—	—	N	—	—	—
42 – 135	—	—	—	—	—	P	—
63 – 200	—	—	—	—	—	R	—
84 – 270	—	—	—	—	—	—	S
131 – 420	—	—	—	—	—	—	T

Cover Control ..... Page 11-5
Dimensions ..... Page 11-19
Wiring Diagrams ..... Page 11-22
Accessories ..... Page 16-2
Modifications ..... Page 16-40
Renewal Parts ..... Page 17-2
Technical Data ..... Page 18-3

Features

- Full Voltage
- 3-Phase Electromechanical
- Solid-State Overload Relay

Product Selection

Table 11-8. Class ECT22 — Type 7/9 Combination Non-reversing Starter — Circuit Breaker

NEMA Size	Motor Voltage	Max. hp	Magnet Coil Voltage ①	Circuit Breaker Type	3-Pole Type 7/9 Bolted Catalog Number ②	Component Starter (Open) Catalog Number ②
0	200	1 3	24V DC	HMCPE 7A HMCPE 15A	**ECT2206EAC-_ ECT2206EAD-_**	**N101BS0_3A**
	230	1 3	24V DC	HMCPE 7A HMCPE 15A	**ECT2206BAC-_ ECT2206BAD-_**	**N101BS0_3A**
	460	1 3 5	24V DC	HMCPE 3A HMCPE 7A HMCPE 15A	**ECT2206CAB-_ ECT2206CAC-_ ECT2206CAD-_**	**N101BS0_3A**
	575	1 3 5	24V DC	HMCP 3A HMCP 7A HMCP 15A	**ECT2206DAB-_ ECT2206DAC-_ ECT2206DAD-_**	**N101BS0_3A**
1	200	1 3 5 7-1/2	24V DC	HMCPE 7A HMCPE 15A HMCPE 30A HMCPE 50A	**ECT2216EAC-_ ECT2216EAD-_ ECT2216EAE-_ ECT2216EAF-_**	**N101CS1_3A**
	230	1 3 5 7-1/2	24V DC	HMCPE 7A HMCPE 15A HMCPE 30A HMCPE 50A	**ECT2216BAC-_ ECT2216BAD-_ ECT2216BAE-_ ECT2216BAF-_**	**N101CS1_3A**
	460	1 3 5 10	24V DC	HMCPE 3A HMCPE 7A HMCPE 15A HMCPE 30A	**ECT2216CAB-_ ECT2216CAC-_ ECT2216CAD-_ ECT2216CAE-_**	**N101CS1_3A**
	575	1 3 5 10	24V DC	HMCP 3A HMCP 7A HMCP 15A HMCP 30A	**ECT2216DAB-_ ECT2216DAC-_ ECT2216DAD-_ ECT2216DAE-_**	**N101CS1_3A**
2	200	10	24V DC	HMCPE 50A	**ECT2226EAF-K**	**N101DS2_3A**
	230	10 15	24V DC	HMCPE 50A HMCPE 70A	**ECT2226BAF-K ECT2226BAW-K**	**N101DS2_3A**
	460	25	24V DC	HMCPE 50A	**ECT2226CAF-K**	**N101DS2_3A**
	575	15 25	24V DC	HMCP 30A HMCP 50A	**ECT2226DAE-K ECT2226DAF-K**	**N101DS2_3A**
3	200	20 25	24V DC	HMCPE 100A HMCPE 100A	**ECT2236EAG-M ECT2236EAG-M**	**N101ES3_3A**
	230	25 30	24V DC	HMCPE 100A HMCPE 100A	**ECT2236BAG-M ECT2236BAG-M**	**N101ES3_3A**
	460	50	24V DC	HMCPE 100A	**ECT2236CAG-M**	**N101ES3_3A**
	575	30 50	24V DC	HMCP 50A HMCP 100A	**ECT2236DAF-M ECT2236DAG-M**	**N101ES3_3A**
4	200	40	24V DC	HMCP 150A	**ECT2246EAH-P**	**N101ES4_3A**
	230	50	24V DC	HMCP 150A	**ECT2246BAH-P**	**N101ES4_3A**
	460	100	24V DC	HMCP 150A	**ECT2246CAH-P**	**N101ES4_3A**
	575	100	24V DC	HMCP 150A	**ECT2246DAH-P**	**N101ES4_3A**
5	200	50 75	24V DC	HMCP 250A HMCP 400A	**ECT2256EAJ-S ECT2256EAK-S**	**N101FS5_3A**
	230	60 100	24V DC	HMCP 250A HMCP 400A	**ECT2256BAJ-S ECT2256BAK-S**	**N101FS5_3A**
	460	125 200	24V DC	HMCP 250A HMCP 400A	**ECT2256CAJ-S ECT2256CAK-S**	**N101FS5_3A**
	575	150 200	24V DC	HMCP 250A HMCP 400A	**ECT2256DAJ-S ECT2256DAK-S**	**N101FS5_3A**

① All *IT.* Contactors and Starters are furnished with 24V DC coil and control power supply. The eighth digit **Q** denotes separate 24V DC control source.

② A "_" denotes Catalog Numbers are incomplete without the Solid-State Overload Range Code. To complete the Catalog Number, select the appropriate Code from **Table 11-2**.

Cover Control ..... **Page 11-5**
Dimensions ..... **Page 11-19**
Wiring Diagrams ..... **Page 11-22**
Accessories ..... **Page 16-2**
Modifications ..... **Page 16-40**
Renewal Parts ..... **Page 17-2**
Technical Data ..... **Page 18-3**

Table 11-9. Class ECT23 — Type 7/9 Combination Reversing Starter — Circuit Breaker

NEMA Size	Motor Voltage	Max. hp	Magnet Coil Voltage ①	Circuit Breaker Type	3-Pole Type 7/9 Bolted Catalog Number ②	Component Starter (Open) Catalog Number ②
0	200	1 3	24V DC	HMCPE 7A HMCPE 15A	**ECT2306EAC-_ ECT2306EAD-_**	**N501BS0_3A**
	230	1 3	24V DC	HMCPE 7A HMCPE 15A	**ECT2306BAC-_ ECT2306BAD-_**	**N501BS0_3A**
	460	1 3 5	24V DC	HMCPE 3A HMCPE 7A HMCPE 15A	**ECT2306CAB-_ ECT2306CAC-_ ECT2306CAD-_**	**N501BS0_3A**
	575	1 3 5	24V DC	HMCP 3A HMCP 7A HMCP 15A	**ECT2306DAB-_ ECT2306DAC-_ ECT2306DAD-_**	**N501BS0_3A**
1	200	1 3 5 7-1/2	24V DC	HMCPE 7A HMCPE 15A HMCPE 30A HMCPE 50A	**ECT2316EAC-_ ECT2316EAD-_ ECT2316EAE-_ ECT2316EAF-_**	**N501CS1_3A**
	230	1 3 5 7-1/2	24V DC	HMCPE 7A HMCPE 15A HMCPE 30A HMCPE 50A	**ECT2316BAC-_ ECT2316BAD-_ ECT2316BAE-_ ECT2316BAF-_**	**N501CS1_3A**
	460	1 3 5 10	24V DC	HMCPE 3A HMCPE 7A HMCPE 15A HMCPE 30A	**ECT2316CAB-_ ECT2316CAC-_ ECT2316CAD-_ ECT2316CAE-_**	**N501CS1_3A**
	575	1 3 5 10	24V DC	HMCP 3A HMCP 7A HMCP 15A HMCP 30A	**ECT2316DAB-_ ECT2316DAC-_ ECT2316DAD-_ ECT2316DAE-_**	**N501CS1_3A**
2	200	10	24V DC	HMCPE 50A	**ECT2326EAF-K**	**N501DS2_3A**
	230	10 15	24V DC	HMCPE 50A HMCPE 70A	**ECT2326BAF-K ECT2326BAW-K**	**N501DS2_3A**
	460	25	24V DC	HMCPE 50A	**ECT2326CAF-K**	**N501DS2_3A**
	575	15 25	24V DC	HMCP 30A HMCP 50A	**ECT2326DAE-K ECT2326DAF-K**	**N501DS2_3A**
3	200	20 25	24V DC	HMCPE 100A HMCPE 100A	**ECT2336EAG-M ECT2336EAG-M**	**N501ES3_3A**
	230	25 30	24V DC	HMCPE 100A HMCPE 100A	**ECT2336BAG-M ECT2336BAG-M**	**N501ES3_3A**
	460	50	24V DC	HMCPE 100A	**ECT2336CAG-M**	**N501ES3_3A**
	575	30 50	24V DC	HMCP 50A HMCP 100A	**ECT2336DAF-M ECT2336DAG-M**	**N501ES3_3A**
4	200	40	24V DC	HMCP 150A	**ECT2346EAH-P**	**N501ES4_3A**
	230	50	24V DC	HMCP 150A	**ECT2346BAH-P**	**N501ES4_3A**
	460	100	24V DC	HMCP 150A	**ECT2346CAH-P**	**N501ES4_3A**
	575	100	24V DC	HMCP 150A	**ECT2346DAH-P**	**N501ES4_3A**
5	200	50 75	24V DC	HMCP 250A HMCP 400A	**ECT2356EAJ-S ECT2356EAK-S**	**N501FS5_3A**
	230	60 100	24V DC	HMCP 250A HMCP 400A	**ECT2356BAJ-S ECT2356BAK-S**	**N501FS5_3A**
	460	125 200	24V DC	HMCP 250A HMCP 400A	**ECT2356CAJ-S ECT2356CAK-S**	**N501FS5_3A**
	575	150 200	24V DC	HMCP 250A HMCP 400A	**ECT2356DAJ-S ECT2356DAK-S**	**N501FS5_3A**

① All *IT.* Contactors and Starters are furnished with 24V DC coil and control power supply. The eighth digit **Q** denotes separate 24V DC control source.

② A "_" denotes Catalog Numbers are incomplete without the Solid-State Overload Range Code. To complete the Catalog Number, select the appropriate Code from **Table 11-2**.

Cover Control ..... **Page 11-5**
Dimensions ..... **Page 11-19**
Wiring Diagrams ..... **Page 11-22**
Accessories ..... **Page 16-2**
Modifications ..... **Page 16-40**
Renewal Parts ..... **Page 17-2**
Technical Data ..... **Page 18-3**

Table 11-10. Class ECT24/ECT23 — Type 7/9 Combination Starter with CPT — Circuit Breaker

Motor Voltage	Max. hp	Magnet Coil Voltage ①	Circuit Breaker Type	Non-reversing 3-Pole Type 7/9 Bolted Catalog Number ②	Non-reversing Component Starter (Open) Catalog Number ②	Reversing 3-Pole Type 7/9 Bolted Catalog Number ②	Reversing Component Starter (Open) Catalog Number ②
NEMA Size — 0							
200	1 3	24V DC	HMCPE 7A HMCPE 15A	**ECT2406EAC-_** **ECT2406EAD-_**	**N101BS0_3A**	**ECT2306EAC-_-C** **ECT2306EAD-_-C**	**N501BS0_3A**
230	1 3	24V DC	HMCPE 7A HMCPE 15A	**ECT2406BAC-_** **ECT2406BAD-_**	**N101BS0_3A**	**ECT2306BAC-_-C** **ECT2306BAD-_-C**	**N501BS0_3A**
460	1 3 5	24V DC	HMCPE 3A HMCPE 7A HMCPE 15A	**ECT2406CAB-_** **ECT2406CAC-_** **ECT2406CAD-_**	**N101BS0_3A**	**ECT2306CAB-_-C** **ECT2306CAC-_-C** **ECT2306CAD-_-C**	**N501BS0_3A**
575	1 3 5	24V DC	HMCP 3A HMCP 7A HMCP 15A	**ECT2406DAB-_** **ECT2406DAC-_** **ECT2406DAD-_**	**N101BS0_3A**	**ECT2306DAB-_-C** **ECT2306DAC-_-C** **ECT2306DAD-_-C**	**N501BS0_3A**
NEMA Size — 1							
200	1 3 5 7-1/2	24V DC	HMCPE 7A HMCPE 15A HMCPE 30A HMCPE 50A	**ECT2416EAC-_** **ECT2416EAD-_** **ECT2416EAE-_** **ECT2416EAF-_**	**N101CS1_3A**	**ECT2316EAC-_-C** **ECT2316EAD-_-C** **ECT2316EAE-_-C** **ECT2316EAF-_-C**	**N501CS1_3A**
230	1 3 5 7-1/2	24V DC	HMCPE 7A HMCPE 15A HMCPE 30A HMCPE 50A	**ECT2416BAC-_** **ECT2416BAD-_** **ECT2416BAE-_** **ECT2416BAF-_**	**N101CS1_3A**	**ECT2316BAC-_-C** **ECT2316BAD-_-C** **ECT2316BAE-_-C** **ECT2316BAF-_-C**	**N501CS1_3A**
460	1 3 5 10	24V DC	HMCPE 3A HMCPE 7A HMCPE 15A HMCPE 30A	**ECT2416CAB-_** **ECT2416CAC-_** **ECT2416CAD-_** **ECT2416CAE-_**	**N101CS1_3A**	**ECT2316CAB-_-C** **ECT2316CAC-_-C** **ECT2316CAD-_-C** **ECT2316CAE-_-C**	**N501CS1_3A**
575	1 3 5 10	24V DC	HMCP 3A HMCP 7A HMCP 15A HMCP 30A	**ECT2416DAB-_** **ECT2416DAC-_** **ECT2416DAD-_** **ECT2416DAE-_**	**N101CS1_3A**	**ECT2316DAB-_-C** **ECT2316DAC-_-C** **ECT2316DAD-_-C** **ECT2316DAE-_-C**	**N501CS1_3A**
NEMA Size — 2							
200	10	24V DC	HMCPE 50A	**ECT2426EAF-K**	**N101DS2_3A**	**ECT2326EAF-K-C**	**N501DS2_3A**
230	10 15	24V DC	HMCPE 50A HMCPE 70A	**ECT2426BAF-K** **ECT2426BAW-K**	**N101DS2_3A**	**ECT2326BAF-K-C** **ECT2326BAW-K-C**	**N501DS2_3A**
460	25	24V DC	HMCPE 50A	**ECT2426CAF-K**	**N101DS2_3A**	**ECT2326CAF-K-C**	**N501DS2_3A**
575	15 25	24V DC	HMCP 30A HMCP 50A	**ECT2426DAE-K** **ECT2426DAF-K**	**N101DS2_3A**	**ECT2326DAE-K-C** **ECT2326DAF-K-C**	**N501DS2_3A**
NEMA Size — 3							
200	20 25	24V DC	HMCPE 100A HMCPE 100A	**ECT2436EAG-M** **ECT2436EAG-M**	**N101ES3_3A**	**ECT2336EAG-M-C** **ECT2336EAG-M-C**	**N501ES3_3A**
230	25 30	24V DC	HMCPE 100A HMCPE 100A	**ECT2436BAG-M** **ECT2436BAG-M**	**N101ES3_3A**	**ECT2336BAG-M-C** **ECT2336BAG-M-C**	**N501ES3_3A**
460	50	24V DC	HMCPE 100A	**ECT2436CAG-M**	**N101ES3_3A**	**ECT2336CAG-M-C**	**N501ES3_3A**
575	30 50	24V DC	HMCP 50A HMCP 100A	**ECT2436DAF-M** **ECT2436DAG-M**	**N101ES3_3A**	**ECT2336DAF-M-C** **ECT2336DAG-M-C**	**N501ES3_3A**
NEMA Size — 4							
200	40	24V DC	HMCP 150A	**ECT2446EAH-P**	**N101ES4_3A**	**ECT2346EAH-P-C**	**N501ES4_3A**
230	50	24V DC	HMCP 150A	**ECT2446BAH-P**	**N101ES4_3A**	**ECT2346BAH-P-C**	**N501ES4_3A**
460	100	24V DC	HMCP 150A	**ECT2446CAH-P**	**N101ES4_3A**	**ECT2346CAH-P-C**	**N501ES4_3A**
575	100	24V DC	HMCP 150A	**ECT2446DAH-P**	**N101ES4_3A**	**ECT2346DAH-P-C**	**N501ES4_3A**
NEMA Size — 5							
200	50 75	24V DC	HMCP 250A HMCP 400A	**ECT2456EAJ-S** **ECT2456EAK-S**	**N101FS5_3A**	**ECT2356EAJ-S-C** **ECT2356EAK-S-C**	**N501FS5_3A**
230	60 100	24V DC	HMCP 250A HMCP 400A	**ECT2456BAJ-S** **ECT2456BAK-S**	**N101FS5_3A**	**ECT2356BAJ-S-C** **ECT2356BAK-S-C**	**N501FS5_3A**
460	125 200	24V DC	HMCP 250A HMCP 400A	**ECT2456CAJ-S** **ECT2456CAK-S**	**N101FS5_3A**	**ECT2356CAJ-S-C** **ECT2356CAK-S-C**	**N501FS5_3A**
575	150 200	24V DC	HMCP 250A HMCP 400A	**ECT2456DAJ-S** **ECT2456DAK-S**	**N101FS5_3A**	**ECT2356DAJ-S-C** **ECT2356DAK-S-C**	**N501FS5_3A**

① All *IT.* Contactors and Starters are furnished with 24V DC coil and control power supply. The eighth digit **Ω** denotes separate 24V DC control source.

② A "_" denotes Catalog Numbers are incomplete without the Solid-State Overload Range Code. To complete the Catalog Number, select the appropriate Code from **Table 11-2**.

Cover Control ..... **Page 11-5**
Dimensions ..... **Page 11-19**
Wiring Diagrams ..... **Page 11-22**
Accessories ..... **Page 16-2**
Modifications ..... **Page 16-40**
Renewal Parts ..... **Page 17-2**
Technical Data ..... **Page 18-3**

Features

- Full Voltage
- Standard Interchangeable Heater OLR
- Optional Electronic Overload
- 600V Maximum

Product Selection

Table 11-11. Class ECN05 — Type 7/9 Non-combination Non-reversing Starter

NEMA Size	Motor Volt.	Max. hp Rating ①	Mag. Coil Volt.	3-Pole Type 7/9 Bolted Catalog Number	Component Starter (Open) Catalog Number
0	— 200 230 460 575	— 3 3 5 5	120 208 240 480 600	**ECN0506AAA** **ECN0506EAA** **ECN0506BAA** **ECN0506CAA** **ECN0506DAA**	**AN16BN0AC** **AN16BN0EC** **AN16BN0BC** **AN16BN0CC** **AN16BN0DC**
1	— 200 230 460 575	— 7-1/2 7-1/2 10 10	120 208 240 480 600	**ECN0516AAA** **ECN0516EAA** **ECN0516BAA** **ECN0516CAA** **ECN0516DAA**	**AN16DN0AB** **AN16DN0EB** **AN16DN0BB** **AN16DN0CB** **AN16DN0DB**
2	— 200 230 460 575	— 10 15 25 25	120 208 240 480 600	**ECN0526AAA** **ECN0526EAA** **ECN0526BAA** **ECN0526CAA** **ECN0526DAA**	**AN16GN0AB** **AN16GN0EB** **AN16GN0BB** **AN16GN0CB** **AN16GN0DB**
3	— 200 230 460 575	— 25 30 50 50	120 208 240 480 600	**ECN0536AAA** **ECN0536EAA** **ECN0536BAA** **ECN0536CAA** **ECN0536DAA**	**AN16KN0A** **AN16KN0E** **AN16KN0B** **AN16KN0C** **AN16KN0D**
4	— 200 230 460 575	— 40 50 100 100	120 208 240 480 600	**ECN0546AAA** **ECN0546EAA** **ECN0546BAA** **ECN0546CAA** **ECN0546DAA**	**AN16NN0A** **AN16NN0E** **AN16NN0B** **AN16NN0C** **AN16NN0D**
5	— 200 230 460 575	— 75 100 200 200	120 208 240 480 600	**ECN0556AAA** **ECN0556EAA** **ECN0556BAA** **ECN0556CAA** **ECN0556DAA**	**AN16SN0AB** **AN16SN0EB** **AN16SN0BB** **AN16SN0CB** **AN16SN0DB**

Starters do not include heater packs. Select 1 carton of 3 heater packs. For Heater Pack Selection, see **Page 16-6**.
Starters with Electronic Overload, see **Page 16-45** of Modification Codes.

① Maximum horsepower rating of starters for 380V 50 Hz applications:

NEMA Size	00	0	1	2	3	4	5	6
Horsepower	1-1/2	5	10	25	50	75	150	300

Cover Control ..... **Page 11-5**
Dimensions ..... **Page 11-19**
Wiring Diagrams ..... **Page 11-22**
Accessories ..... **Page 16-4**
Modifications ..... **Page 16-40**
Renewal Parts ..... **Page 17-4**
Technical Data ..... **Page 18-7**

Table 11-12. Class ECN06 — Type 7/9 Non-combination Reversing Starter

NEMA Size	Motor Volt.	Max. hp Rating ①	Mag. Coil Volt.	3-Pole Type 7/9 Bolted Catalog Number	Component Starter (Open) Catalog Number
0	—	—	120	ECN0606AAA	AN56BN0AC
	200	3	208	ECN0606EAA	AN56BN0EC
	230	3	240	ECN0606BAA	AN56BN0BC
	460	5	480	ECN0606CAA	AN56BN0CC
	575	5	600	ECN0606DAA	AN56BN0DC
1	—	—	120	ECN0616AAA	AN56DN0AB
	200	7-1/2	208	ECN0616EAA	AN56DN0EB
	230	7-1/2	240	ECN0616BAA	AN56DN0BB
	460	10	480	ECN0616CAA	AN56DN0CB
	575	10	600	ECN0616DAA	AN56DN0DB
2	—	—	120	ECN0626AAA	AN56GN0AB
	200	10	208	ECN0626EAA	AN56GN0EB
	230	15	240	ECN0626BAA	AN56GN0BB
	460	25	480	ECN0626CAA	AN56GN0CB
	575	25	600	ECN0626DAA	AN56GN0DB
3	—	—	120	ECN0636AAA	AN56KN0A
	200	25	208	ECN0636EAA	AN56KN0E
	230	30	240	ECN0636BAA	AN56KN0B
	460	50	480	ECN0636CAA	AN56KN0C
	575	50	600	ECN0636DAA	AN56KN0D

Starters do not include heater packs. Select 1 carton of 3 heater packs. For Heater Pack Selection, see **Page 16-6**.
Starters with Electronic Overload, see **Page 16-45** of Modification Codes.

① Maximum horsepower rating of starters for 380V 50 Hz applications:

NEMA Size	00	0	1	2	3	4	5	6
Horsepower	1-1/2	5	10	25	50	75	150	300

Cover Control ..... **Page 11-5**
Dimensions ..... **Page 11-19**
Wiring Diagrams ..... **Page 11-22**
Accessories ..... **Page 16-4**
Modifications ..... **Page 16-40**
Renewal Parts ..... **Page 17-4**
Technical Data ..... **Page 18-7**

Table 11-13. Class ECN07 — Type 7/9 Non-combination Non-reversing Starter with CPT

NEMA Size	Primary Voltage ②	Max. hp Rating ①	Magnetic Coil Voltage	3-Pole Type 7/9 Bolted Catalog Number	Component Starter (Open) Catalog Number
0	208	3	120	ECN0706EAA	AN16BN0AC
	240	3		ECN0706BAA	
	480	5		ECN0706CAA	
	600	5		ECN0706DAA	
1	208	7-1/2	120	ECN0716EAA	AN16DN0AB
	240	7-1/2		ECN0716BAA	
	480	10		ECN0716CAA	
	600	10		ECN0716DAA	
2	208	10	120	ECN0726EAA	AN16GN0AB
	240	15		ECN0726BAA	
	480	25		ECN0726CAA	
	600	25		ECN0726DAA	
3	208	25	120	ECN0736EAA	AN16KN0A
	240	30		ECN0736BAA	
	480	50		ECN0736CAA	
	600	50		ECN0736DAA	
4	208	40	120	ECN0746EAA	AN16NN0A
	240	50		ECN0746BAA	
	480	100		ECN0746CAA	
	600	100		ECN0746DAA	
5	208	75	120	ECN0756EAA	AN16SN0AB
	240	100		ECN0756BAA	
	480	200		ECN0756CAA	
	600	200		ECN0756DAA	

Starters do not include heater packs. Select 1 carton of 3 heater packs. For Heater Pack Selection, see **Page 16-6**.
Starters with Electronic Overload, see **Page 16-45** of Modification Codes.

① Maximum horsepower rating of starters for 380V 50 Hz applications:

NEMA Size	00	0	1	2	3	4	5	6
Horsepower	1-1/2	5	10	25	50	75	150	300

② For other control power transformer primary and/or secondary voltage options, see **Page 3-20**.

Cover Control ..... **Page 11-5**
Dimensions ..... **Page 11-19**
Wiring Diagrams ..... **Page 11-22**
Accessories ..... **Page 16-4**
Modifications ..... **Page 16-40**
Renewal Parts ..... **Page 17-4**
Technical Data ..... **Page 18-7**

Features

- Full Voltage
- Standard Interchangeable Heater OLR
- Optional Electronic Overload
- 600V Maximum

Product Selection

Table 11-14. ECN22 — Type 7/9 Combination Non-reversing Starter — Circuit Breaker

NEMA Size	Motor Voltage	Max. hp Rating	Magnet Coil Voltage ①	Circuit Breaker Type	3-Pole Type 7/9 Bolted Catalog Number	Component Starter (Open) Catalog Number
0	200	1 3	208	HMCP 7A HMCP 15A	**ECN2206EAC** **ECN2206EAD**	**AN16BN0EC**
	230	1 3	240	HMCP 7A HMCP 15A	**ECN2206BAC** **ECN2206BAD**	**AN16BN0BC**
	460	1 3 5	480	HMCP 3A HMCP 7A HMCP 15A	**ECN2206CAB** **ECN2206CAC** **ECN2206CAD**	**AN16BN0CC**
	575	1 3 5	600	HMCP 3A HMCP 7A HMCP 15A	**ECN2206DA5** **ECN2206DA6** **ECN2206DA7**	**AN16BN0DC**
1	200	1 3 5 7-1/2	208	HMCP 7A HMCP 15A HMCP 30A HMCP 50A	**ECN2216EAC** **ECN2216EAD** **ECN2216EAE** **ECN2216EAF**	**AN16DN0EB**
	230	1 3 5 7-1/2	240	HMCP 7A HMCP 15A HMCP 30A HMCP 50A	**ECN2216BAC** **ECN2216BAD** **ECN2216BAE** **ECN2216BAF**	**AN16DN0BB**
	460	1 3 5 10	480	HMCP 3A HMCP 7A HMCP 15A HMCP 30A	**ECN2216CZB** **ECN2216CAC** **ECN2216CAD** **ECN2216CAE**	**AN16DN0CB**
	575	1 3 5 10	600	HMCP 3A HMCP 7A HMCP 15A HMCP 30A	**ECN2216DA5** **ECN2216DA6** **ECN2216DA7** **ECN2216DA8**	**AN16DN0DB**
2	200	10	208	HMCP 50A	**ECN2226EAF**	**AN16GN0EB**
	230	10 15	240	HMCP 50A HMCP 70A	**ECN2226BAF** **ECN2226BAW**	**AN16GN0BB**
	460	25	480	HMCP 50A	**ECN2226CAF**	**AN16GN0CB**
	575	15 25	600	HMCP 30A HMCP 50A	**ECN2226DA8** **ECN2226DA9**	**AN16GN0DB**
3	200	20 25	208	HMCP 100A HMCP 100A	**ECN2236EAG** **ECN2236EAG**	**AN16KN0E**
	230	25 30	240	HMCP 100A HMCP 100A	**ECN2236BAG** **ECN2236BAG**	**AN16KN0B**
	460	50	480	HMCP 100A	**ECN2236CAG**	**AN16KN0C**
	575	30 50	600	HMCP 50A HMCP 100A	**ECN2236DA9** **ECN2236DAI**	**AN16KN0D**
4	200 230 460 575	40 50 100 100	208 240 480 600	HMCP 150A HMCP 150A HMCP 150A HMCP 150A	**ECN2246EAH** **ECN2246BAH** **ECN2246CAH** **ECN2246DAH**	**AN16NN0E** **AN16NN0B** **AN16NN0C** **AN16NN0D**

Starters do not include heater packs. Select 1 carton of 3 heater packs. For Heater Pack Selection, see **Page 16-6**.
Starters with Electronic Overload, see **Page 16-45** of Modification Codes.

① Starters with 120V coil (for separate control) are available. To order, substitute the letter **A** for the 8th character of the listed Catalog Number.

Cover Control ..... **Page 11-5**
Dimensions ..... **Page 11-19**
Wiring Diagrams ..... **Page 11-22**
Accessories ..... **Page 16-4**
Modifications ..... **Page 16-40**
Renewal Parts ..... **Page 17-4**
Technical Data ..... **Page 18-7**

Table 11-15. ECN23 — Type 7/9 Combination Reversing Starter — Circuit Breaker

NEMA Size	Motor Voltage	Max. hp Rating	Magnet Coil Voltage ①	Circuit Breaker Type	3-Pole Type 7/9 Bolted Catalog Number	Component Starter (Open) Catalog Number
0	200	1 3	208	HMCP 7A HMCP 15A	**ECN2306EAC** **ECN2306EAD**	**AN56BN0EC**
	230	1 3	240	HMCP 7A HMCP 15A	**ECN2306BAC** **ECN2306BAD**	**AN56BN0BC**
	460	1 3 5	480	HMCP 3A HMCP 7A HMCP 15A	**ECN2306CAB** **ECN2306CAC** **ECN2306CAD**	**AN56BN0CC**
	575	1 3 5	600	HMCP 3A HMCP 7A HMCP 15A	**ECN2306DA5** **ECN2306DA6** **ECN2306DA7**	**AN56BN0DC**
1	200	1 3 5 7-1/2	208	HMCP 7A HMCP 15A HMCP 30A HMCP 50A	**ECN2316EAC** **ECN2316EAD** **ECN2316EAE** **ECN2316EAF**	**AN56DN0EB**
	230	1 3 5 7-1/2	240	HMCP 7A HMCP 15A HMCP 30A HMCP 50A	**ECN2316BAC** **ECN2316BAD** **ECN2316BAE** **ECN2316BAF**	**AN56DN0BB**
	460	1 3 5 10	480	HMCP 3A HMCP 7A HMCP 15A HMCP 30A	**ECN2316CAB** **ECN2316CAC** **ECN2316CAD** **ECN2316CAE**	**AN56DN0CB**
	575	1 3 5 10	600	HMCP 3A HMCP 7A HMCP 15A HMCP 30A	**ECN2316DA5** **ECN2316DA6** **ECN2316DA7** **ECN2316DA8**	**AN56DN0DB**
2	200	10	208	HMCP 50A	**ECN2326EAF**	**AN56GN0EB**
	230	10 15	240	HMCP 50A HMCP 70A	**ECN2326BAF** **ECN2326BAW**	**AN56GN0BB**
	460	25	480	HMCP 50A	**ECN2326CAF**	**AN56GN0CB**
	575	15 25	600	HMCP 30A HMCP 50A	**ECN2326DA8** **ECN2326DA9**	**AN56GN0DB**
3	200	20 25	208	HMCP 100A HMCP 100A	**ECN2336EAG** **ECN2336EAG**	**AN56KN0E**
	230	25 30	240	HMCP 100A HMCP 100A	**ECN2336BAG** **ECN2336BAG**	**AN56KN0B**
	460	50	480	HMCP 100A	**ECN2336CAG**	**AN56KN0C**
	575	30 50	600	HMCP 50A HMCP 100A	**ECN2336DA9** **ECN2336DAI**	**AN56KN0D**

Starters do not include heater packs. Select 1 carton of 3 heater packs. For Heater Pack Selection, see **Page 16-6**.
Starters with Electronic Overload, see **Page 16-45** of Modification Codes.

① Starters with 120V coil (for separate control) are available. To order, substitute the letter **A** for the 8th character of the listed Catalog Number.

Cover Control ..... **Page 11-5**
Dimensions ..... **Page 11-19**
Wiring Diagrams ..... **Page 11-22**
Accessories ..... **Page 16-4**
Modifications ..... **Page 16-40**
Renewal Parts ..... **Page 17-4**
Technical Data ..... **Page 18-7**

Table 11-16. ECN24 — Type 7/9 Combination Non-reversing Starter with CPT — Circuit Breaker

NEMA Size	Primary Voltage ①	Max. hp Rating	Magnetic Coil Voltage	Circuit Breaker Type	3-Pole NEMA 7/9 Bolted Catalog Number	Component Starter (Open) Catalog Number
0	200	1 3	120	HMCP 7A HMCP 15A	**ECN2406EAC** **ECN2406EAD**	**AN16BN0AC**
	230	1 3	120	HMCP 7A HMCP 15A	**ECN2406BAC** **ECN2406BAD**	**AN16BN0AC**
	460	1 3 5	120	HMCP 3A HMCP 7A HMCP 15A	**ECN2406CAB** **ECN2406CAC** **ECN2406CAD**	**AN16BN0AC**
	575	1 3 5	120	HMCP 3A HMCP 7A HMCP 15A	**ECN2406DA5** **ECN2406DA6** **ECN2406DA7**	**AN16BN0AC**
1	200	1 3 5 7-1/2	120	HMCP 7A HMCP 15A HMCP 30A HMCP 50A	**ECN2416EAC** **ECN2416EAD** **ECN2416EAE** **ECN2416EAF**	**AN16DN0AB**
	230	1 3 5 7-1/2	120	HMCP 7A HMCP 15A HMCP 30A HMCP 50A	**ECN2416BAC** **ECN2416BAD** **ECN2416BAE** **ECN2416BAF**	**AN16DN0AB**
	460	1 3 5 10	120	HMCP 3A HMCP 7A HMCP 15A HMCP 30A	**ECN2416CAB** **ECN2416CAC** **ECN2416CAD** **ECN2416CAE**	**AN16DN0AB**
	575	1 3 5 10	120	HMCP 3A HMCP 7A HMCP 15A HMCP 30A	**ECN2416DA5** **ECN2416DA6** **ECN2416DA7** **ECN2416DA8**	**AN16DN0AB**
2	200	10	120	HMCP 50A	**ECN2426EAF**	**AN16GN0AB**
	230	10 15	120	HMCP 50A HMCP 70A	**ECN2426BAF** **ECN2426BAW**	**AN16GN0AB**
	460	25	120	HMCP 50A	**ECN2426CAF**	**AN16GN0AB**
	575	15 25	120	HMCP 30A HMCP 50A	**ECN2426DA8** **ECN2426DA9**	**AN16GN0AB**
3	200	20 25	120	HMCP 100A HMCP 100A	**ECN2436EAG** **ECN2436EAG**	**AN16KN0A**
	230	25 30	120	HMCP 100A HMCP 100A	**ECN2436BAG** **ECN2436BAG**	**AN16KN0A**
	460	50	120	HMCP 100A	**ECN2436CAG**	**AN16KN0A**
	575	30 50	120	HMCP 50A HMCP 100A	**ECN2436DA9** **ECN2436DAI**	**AN16KN0A**
4	200 230 460 575	40 50 100 100	120	HMCP 150A HMCP 150A HMCP 150A HMCP 150A	**ECN2446EAH** **ECN2446BAH** **ECN2446CAH** **ECN2446DAH**	**AN16NN0A**

Starters do not include heater packs. Select 1 carton of 3 heater packs. For Heater Pack Selection, see **Page 16-6**.
Starters with Electronic Overload, see **Page 16-45** of Modification Codes.

① For other control power transformer primary and/or secondary voltage options, see **Page 3-20**.

Cover Control ..... **Page 11-5**
Dimensions ..... **Page 11-19**
Wiring Diagrams ..... **Page 11-22**
Accessories ..... **Page 16-4**
Modifications ..... **Page 16-40**
Renewal Parts ..... **Page 17-4**
Technical Data ..... **Page 18-7**

Combination 27A Soft Starter

Product Description

Besides Cutler-Hammer® NEMA Size ***IT.*** and Freedom Starters, Eaton offers Type 7/9 Cast Aluminum Enclosures for solid-state reduced voltage starters and lighting contactors.

Combination Reversing Size 1

Freedom Starters

For information on hazardous location versions, please consult your Eaton Representative.

Solid-State Reduced Voltage Starters

Type 7/9 versions are listed in **Tab 6**.

The ***IT.*** Soft Starters are designed to be the smallest, most compact soft starters on the market today. The built-in overload (ranges from .25 to 1000 amps) and run bypass contactor (greatly reducing the amount of heat generated) make installation and setup quick and easy.

With this small size and low heat dissipation it can easily fit in the place of existing soft starters, Wye-Delta starters or across-the-line starters where others can not. To make the retrofit more flexible, we also offer soft starters as open components or as a completed kit on a back panel for easy and quick installation into your existing enclosure.

Lighting Contactors

Type 7/9 versions are listed in **Tab 5**.

Dimensions

NEMA Size *IT.*

Table 11-17. Intelligent Technologies Full Voltage Non-reversing Starters

Rough Outside Dimensions	Non-combination Sizes	Standard Conduit	Combination Sizes	Standard Conduit
17 x 14	0, 1	1-1/2"	—	—
18 x 15	0, 1, 2	1-1/2"	—	—
28 x 14	3, 4	2"	0, 1, 2, 3	2"
32 x 18	—	—	4	2-1/2"
46 x 16	5	3"	5	3"

NEMA Size Freedom

Table 11-18. Freedom Full Voltage Non-reversing Starters

Rough Outside Dimensions	Non-combination Sizes	Standard Conduit	Combination Sizes	Standard Conduit
17 x 14	0, 1, 2	1-1/2"	—	—
28 x 14	3	2"	0, 1, 2	1-1/2"
32 x 18	4	2-1/2"	3	2"
46 x 16	5	3"	4, 5	3"

Reduced Voltage Solid-State

Table 11-19. S801/S811 Intelligent Technologies Solid-State Soft Starters

Rough Outside Dimensions	Non-combination	Standard Conduit	Combination	Standard Conduit
17 x 14	66 Amps	1-1/2"	—	—
28 x 14	135 Amps	2"	66 Amps	2"
32 x 18	—	—	135 Amps	2-1/2"
46 x 16	304 Amps	3"	304 Amps	3"

Table 11-20. S752 Intelligent Technologies Solid-State Soft Starters

Rough Outside Dimensions	Non-combination	Standard Conduit	Combination	Standard Conduit
18 x 15	50 Amps	1-1/2"	—	—
28 x 14	—	—	50 Amps	1-1/2"

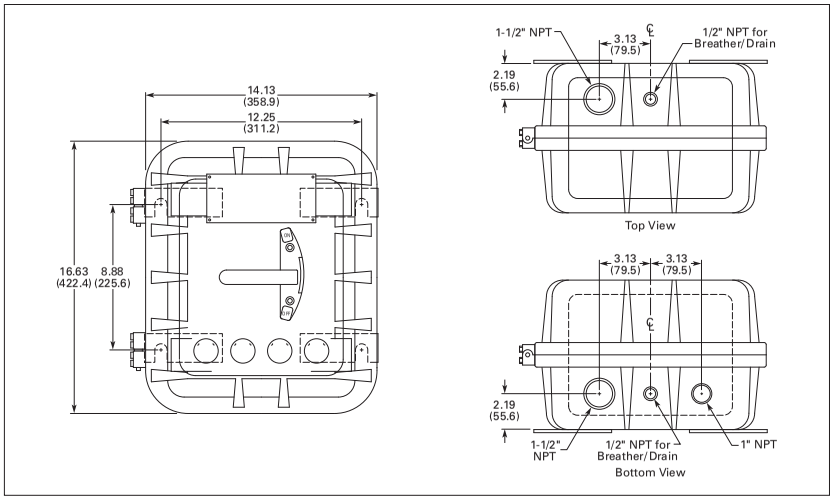

Figure 11-1. Example of Type 7/9 *IT.* Starters — Approximate Dimensions in Inches (mm)

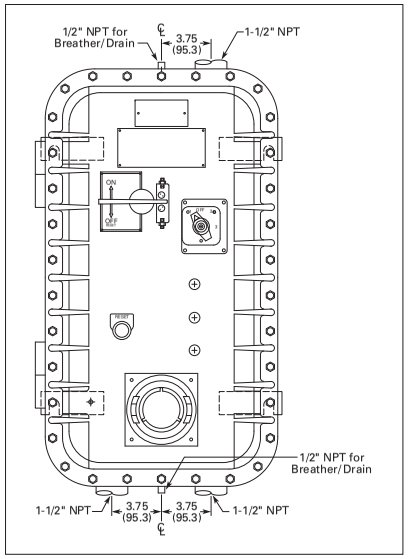

Figure 11-2. Type 7/9 Freedom Starters

Table 11-21. Type 7/9 Approximate Dimensions in Inches (mm)

Dimensions	A	B	C	D	E
Height	27.63 (701.8)	31.63 (803.4)	46.00 (1168.4)	16.63 (422.4)	17.50 (444.5)
Width	14.13 (358.9)	18.13 (460.5)	26.19 (665.2)	14.13 (358.9)	15.10 (383.5)
Depth	11.38 (289.1)	12.19 (309.6)	14.94 (379.5)	9.50 (241.3)	10.50 (266.7)
Weight in Lbs (kg)	125 (57)	195 (89)	500 (227)	80 (36)	95 (43)
I.D. Height	24	28	37	11	12
I.D. Width	10	14	17	9	10

Wiring Diagrams

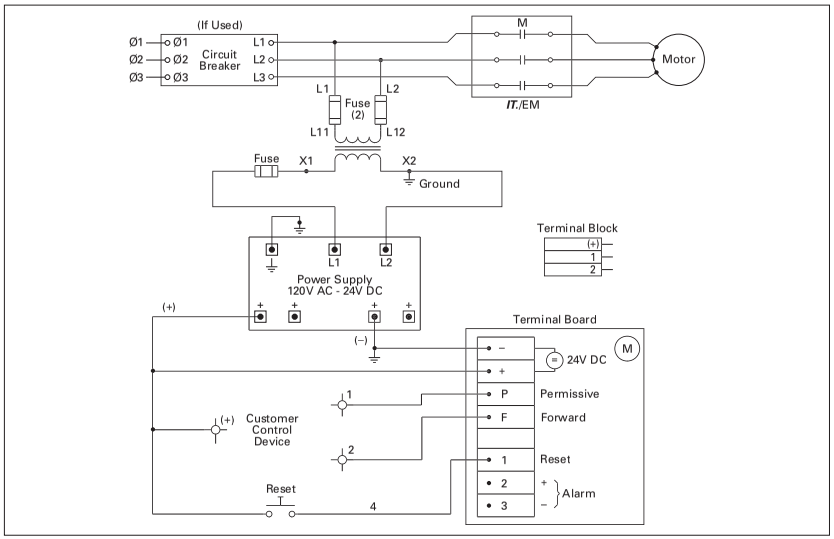

Figure 11-3. *IT.* Combination Starter with CPT and Power Supply

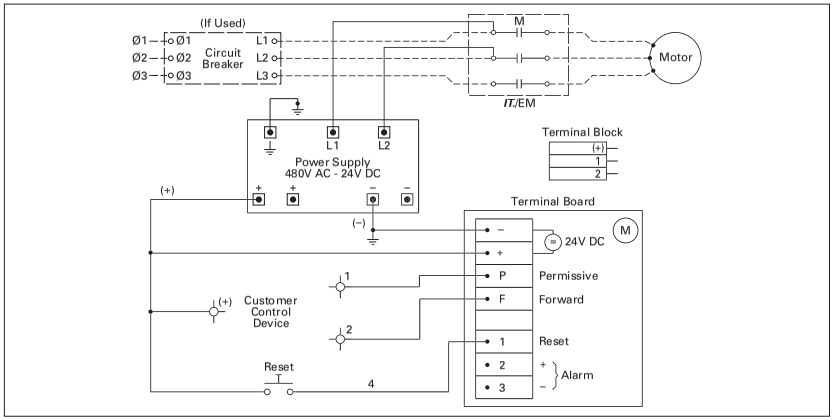

Figure 11-4. *IT.* Combination Starter with Power Supply

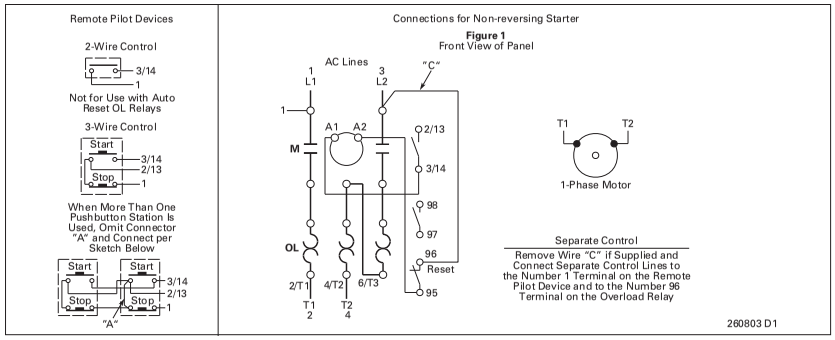

Figure 11-5. Freedom Non-reversing Starter — Single-Phase Non-combination

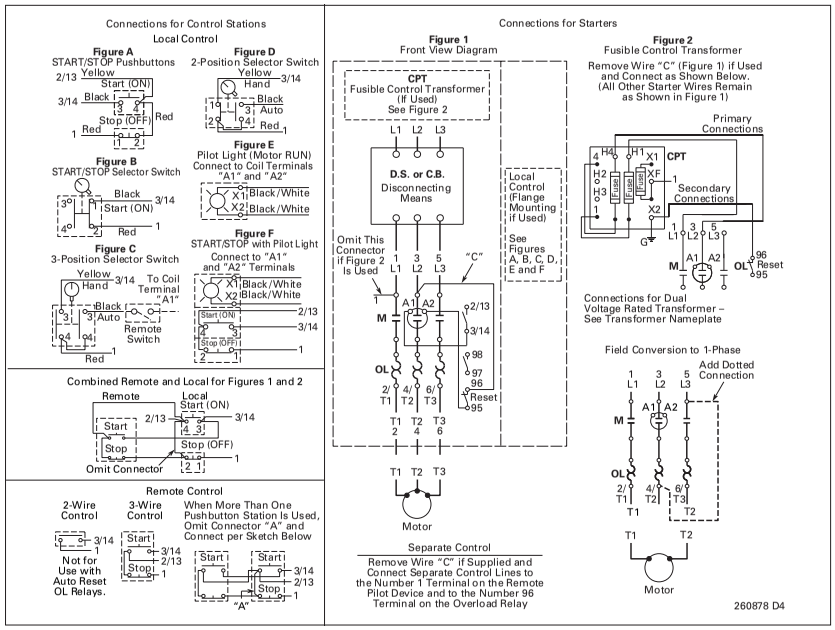

Figure 11-6. Freedom Non-reversing Starter — Combination

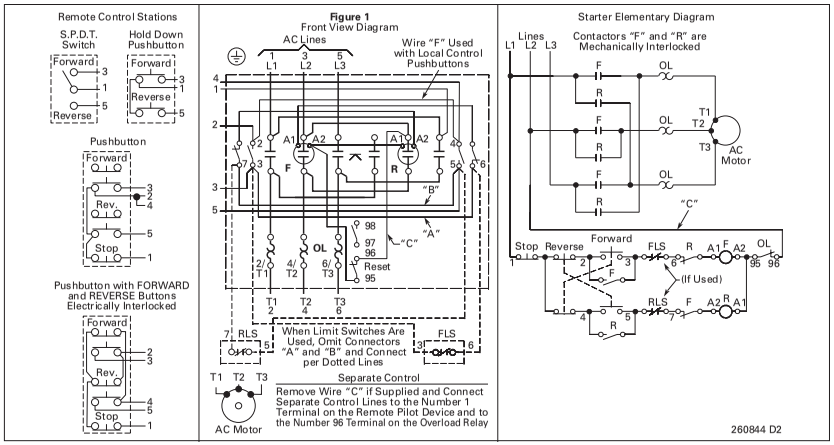

Figure 11-7. Freedom Reversing Starter — Non-combination

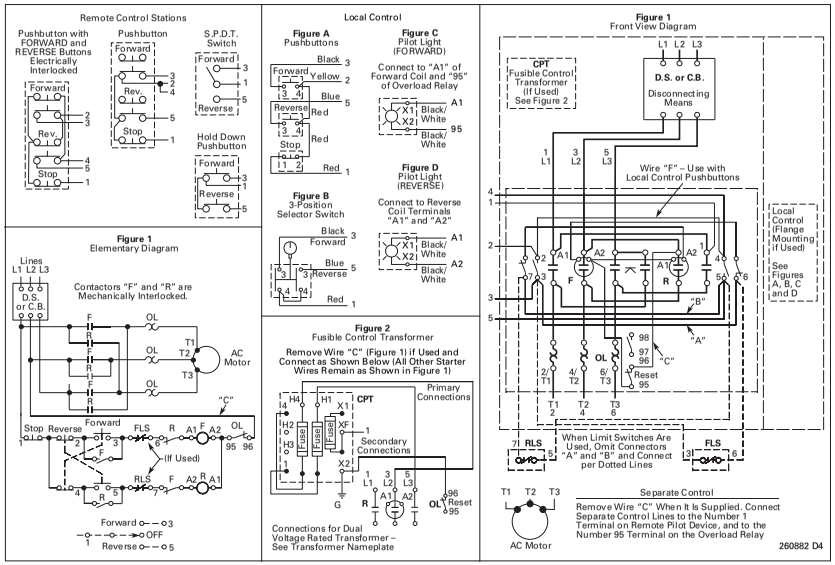

Figure 11-8. Freedom Reversing Starter — Combination

Non-reversing Cover Control

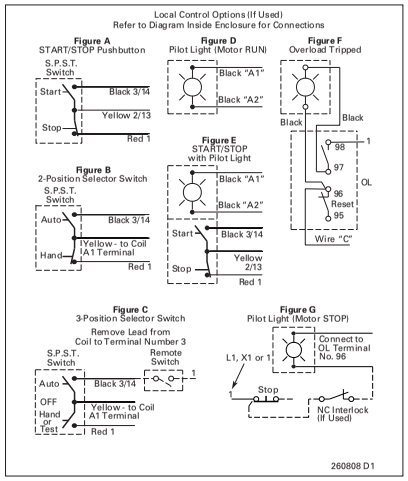

Figure 11-9. Type 1 C400GK Control Options

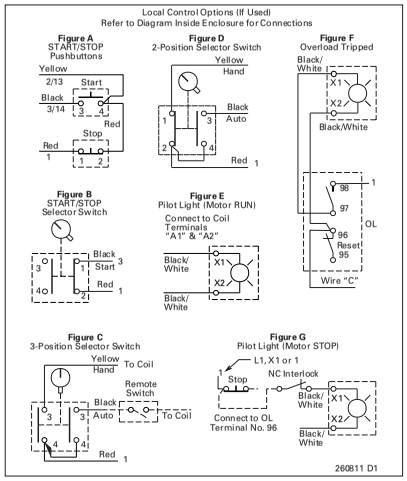

Figure 11-10. C400T Control Options

Reversing Cover Control

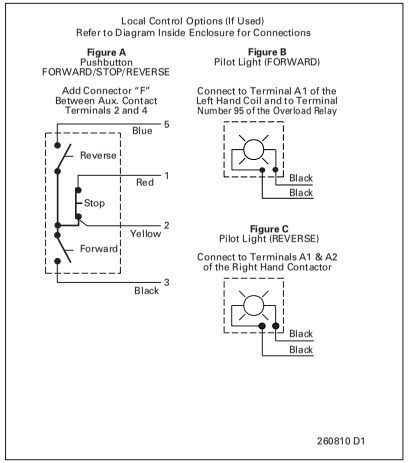

Figure 11-11. Type 1 C400GR Control Options

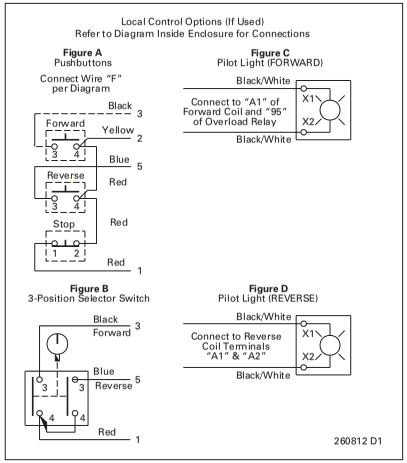

Figure 11-12. C400T Control Options

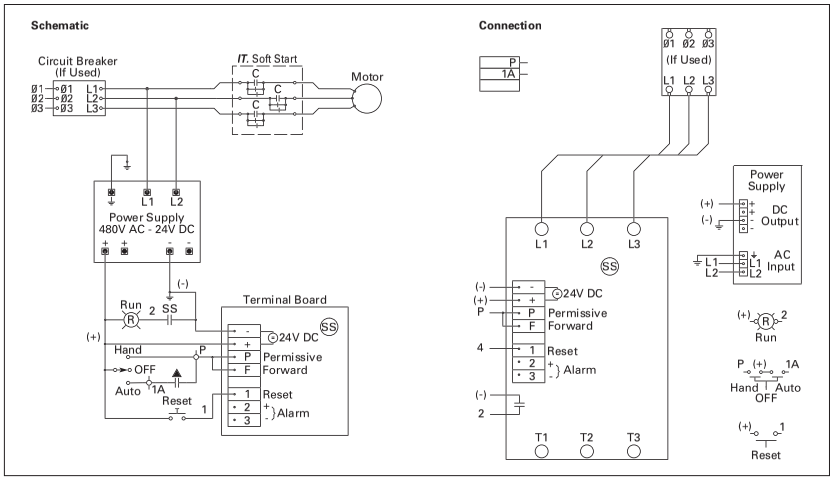

Figure 11-13. S752 Wiring Diagram

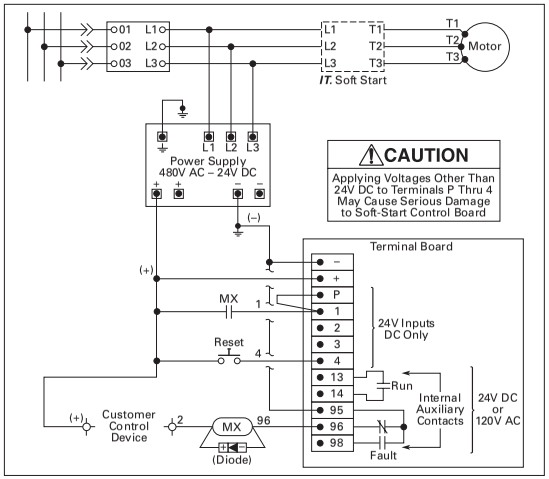

Figure 11-14. S801/S811 Wiring Diagram

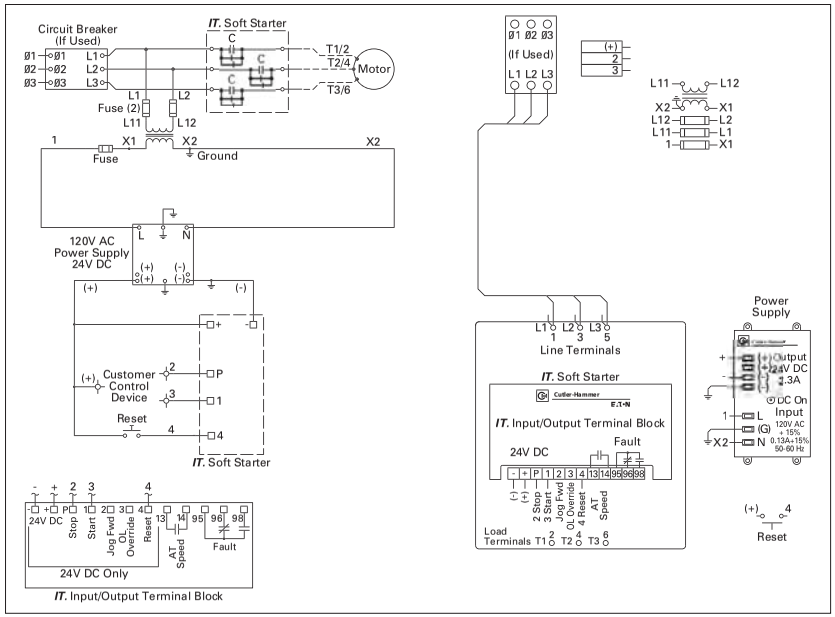

Figure 11-15. S801/S811 with External 120V AC Control

Multi-Pak Group Control

Contents

Description *Page*

Modules and Enclosures
- **Product Family Overview** 12-2
  - Product Description 12-2
  - Accessories 12-3
  - Modification Codes 12-3
- **Starter Modules**
  - Product Selection 12-4
- **Feeder Switch and Circuit Breaker Modules**
  - Product Selection 12-5
- **Enclosures and Blank Doors**
  - Product Selection 12-6
- **Heater Selection** 12-7
- **Dimensions** 12-9

Multi-Pak Group

Multi-Pak Grouping

Product Description

Eaton's Cutler-Hammer Multi-Pak Group Control provides a convenient and economical method of grouping a number of starters and/or control devices. They are an effective solution for applications where the quantity of equipment required or the floor space available does not permit application of control centers or the use of individual starters. The result is a lower field installation cost and a less cluttered appearance. The Multi-Pak is ideally suited for wall mount installations, requiring only 32"L x 26"H space for four compartments or 48"L x 26"H for six compartments. Combinations of 4, 6, 8, 10, 12, 14, etc. compartments can be easily made. Multi-Pak is available in module form or can be completely factory assembled.

Application Description

Multi-Pak starters are designed to save time, space and expense in installing motor control devices — whether for residential, commercial or industrial buildings. The modular assembly allows versatile, on-the-job arrangement of Sizes 1 – 4 combination starters with ambient compensated relays, incoming or feeder circuit breakers or fusible disconnect switches, pushbuttons, control transformers, timers, relays and fuses. The enclosures and separate, prewired modules are field-stocked and can be ordered individually permitting field tailoring to suit the application.

Features

Enclosures

The Type 1 enclosures are partitioned into either four or six compartments to hold combination starter modules, incoming or feeder circuit breakers, fusible switches or other auxiliary devices. The barriers can be removed to provide oversized spaces. Each enclosure holds up to four Size 1 or 2 full voltage, non-reversing combination starter modules; up to two Size 3 or 4 starter modules, or a combination of both size ranges.

The compartments have hinged doors interlocked to prevent opening when the breaker switch is in the ON position. The disconnect operating mechanism can be padlocked in the OFF position.

In addition to the barriered compartments, the enclosure contains two wiring troughs. The top section is a wireway fitted with three power terminal straps, each having terminals for extension to adjoining enclosures and to all four compartments. The incoming line and extension terminals are suitable for either copper or aluminum conductors from No. 6 to 350 MCM. At the bottom of the enclosure is another wiring trough for interconnecting wiring and outgoing cables.

The Multi-Pak enclosure adapts easily to installation requirements. Multiple units can be arranged to suit the space available — horizontally on a single line or two-high. Knockouts are provided at the top, bottom and sides of the enclosures for conduit connection. Conduit can be installed and cables pulled as dictated by the construction schedule. Combination starter modules and incoming or feeder devices can be installed days, months or years later.

Hinged front doors provide easy access to each module. The doors are gasketed with fire retardant material. Knockouts on the doors provide pushbuttons and indicating light mountings.

Combination Starter Modules

Starter modules consist of an A200 magnetic line-starter prewired with a motor circuit protector or a fusible DS disconnect switch on a panel. Full voltage non-reversing and reversing combination starters are available. An external RESET button is mounted on the starter module door. With its versatile modular design, the Multi-Pak starter permits a variety of motor control groupings. One module can contain many different arrangements of devices such as combination linestarters with control transformers, and/or relays, two-feeder circuit breakers or fusible switches.

Feeder Modules

Feeder Modules

Like combination starter modules, breaker/switch modules are factory assembled on a formed steel panel. They are shipped complete with a door for field mounting. The module and door for feeder breakers through 100A or 30A and 60A fusible switches are normally furnished with a single breaker or switch in the top position with provisions for field mounting a second device in the lower position. A kit contains the operator, spacers, insulation and necessary hardware for adding a second device. Feeder modules for higher ratings are single units only.

Standards and Certifications

Note: See **Page 18-2** for additional information on Standards and Certifications that apply to all Cutler-Hammer Enclosed Control products.

- UL Listed
- cUL Listed
- ABS Type Approved

Accessories

Transformer Kits

Includes transformer, fuse clip mounting and fuse clip.

Table 12-1. Transformer Sizes ①

Size	VA Capacity	
	Freedom	Vacuum
0	50	—
1, 2	100	—
3	150	—
4	200	100
5	200	150
6	250	350

① Non-reversing, single contactor only.

Table 12-2. Control Transformer Kits

Continuous VA	Primary 208/277V Secondary 120V, 60 Hz	Primary 240/480V, 60 Hz 220/440V, 50 Hz Secondary 120V, 60 Hz 110V, 50 Hz	Primary 380V Secondary 110V, 50 Hz	Primary 600V, 60 Hz 550V, 50 Hz Secondary 120V, 60 Hz 110V, 50 Hz	Primary 240/480V, 60 Hz Secondary 24V, 60 Hz
	Catalog Number	Catalog Number	Catalog Number	Catalog Number	Catalog Number
50	C341AE	C341AC	C341AL	C341AD	C341AS
75	C341BE	C341BC	C341BL	C341BD	C341BS
100	C341CE	C341CC	C341CL	C341CD	C341CS
150	C341DE	C341DC	C341DL	C341DD	C341DS
200	C341EE	C341EC	C341EL	C341ED	C341ES
250	C341FE	C341FC	C341FL	C341FD	C341FS
300	C341GE	C341GC	C341GL	C341GD	C341GS
350	C341HE	C341HC	C341HL	C341HD	C341HS
500	C341JE	C341JC	C341JL	C341JD	C341JS

Breaker/Switch Modification Kits

Kit includes all necessary hardware for mounting Type T 30 or 60 ampere Visi-Flex Switch or any Type FD or HMCP circuit breaker in the lower blank location in any of the switch or breaker modules as noted. The switch or breaker is not included with the kit.

Table 12-3. Breaker/Switch Kits

Description	Catalog Number
Modification kit for 2nd fusible switch	6263A18G01
Modification kit for 2nd circuit breaker	6263A18G02

Terminal Kits

Table 12-4. Terminal Kits

Description	Catalog Number
Neutral or replacement kit	6263A18G08

Modification Codes

Table 12-5. Factory Installed Modifications

Description	Modification Number
Pushbutton ②	
2 Unit	1
3 Unit	1
2 or 3 Unit Selector Switch ②	2
Indicating Light (specify color) ②	3
Push-to-Test Indicating Light ②	4
Extra Auxiliary Contact (per contact)	5
Control Relay (D15) ③	
2 Pole	6
4 Pole	6
Timing Relay ③	7
Substitute Mark 75 Breaker for standard or feeder unit	8
Control Transformer ④	
Size 1	9
Size 2	9
Size 3	9
Size 4	9

② Three devices per module maximum.
③ Refer to factory for spacing.
④ Primary and secondary fusing supplied.

Note: For more Modification Codes, see **Page 16-40**.

Product Selection

When Ordering Specify

- Orders for modules, kits, etc. for field assembly should be ordered by Catalog Number.
- Orders for factory assembled units should be placed on the Customer Support Center. All modules, kits, etc. should be ordered by Catalog Number with a written description of desired modifications. (Use the modification number where possible).
- Provide a sketch or written description to define the desired locations of the modules in each enclosure along with your order.

Starter Modules with Fusible Disconnect

Table 12-6. Starter Modules with Fusible Disconnect Product Selection ③

NEMA Size	Maximum Horsepower				NEC Fuse Clip Rating		Compart. Required	Catalog Number			
	208/230 Volts		460 – 575 Volts					Coil Voltage			
	NEC Fuses	Dual Element	NEC Fuses	Dual Element	Volts	Amps		120	240	480	550
Class 204 — Three-Phase Non-reversing Combination Starters											
1	3	7-1/2	5	10	600 ②	30	1	6263A08G05	6263A08G01 ①	6263A08G01 ①	6263A08G09
1	7-1/2	—	10	—	600 ②	60	1	6263A08G06	6263A08G02 ①	6263A08G02 ①	6263A08G10
2	7-1/2	15	15	25	600 ②	60	1	6263A08G07	6263A08G03 ①	6263A08G03 ①	6263A08G11
2	15	—	—	—	250	100	1	6263A08G08	6263A08G04 ①	6263A08G04 ①	—
3	15	30	—	—	250	100	2	6263A09G01	6263A09G02	—	—
3	30	—	—	—	250	200	2	6263A09G03	6263A09G04	—	—
3	—	—	30	50	600	100	2	6263A09G05	—	6263A09G06	6263A09G07
3	—	—	50	—	600	200	2	6263A09G08	—	6263A09G09	6263A09G10
Class 214 — Three-Phase Reversing Combination Starters											
1	3	7-1/2	—	—	250	30	2	6263A10G01	6263A10G02	—	—
1	—	—	5	10	600	30	2	6263A10G03	—	6263A10G04	6263A10G05
1	7-1/2	—	—	—	250	60	2	6263A10G06	6263A10G07	—	—
1	—	—	10	—	600	60	2	6263A10G08	—	6263A10G09	6263A10G10
2	7-1/2	15	—	—	250	60	2	6263A10G11	6263A10G12	—	—
2	—	—	15	25	600	60	2	6263A10G13	—	6263A10G14	6263A10G15
2	15	—	—	—	250	100	2	6263A10G16	6263A10G17	—	—

① Dual voltage coil wired for 480 volts; can be field converted to 240 volts.
② 600 volt clips are factory installed. A conversion kit for 250 volt fuses is included with starter modules.
③ Does not include heaters. See **Pages 12-7** and **12-8**.

Starter Modules with HMCP Circuit Breaker

Table 12-7. Starter Modules with HMCP Circuit Breaker Product Selection ⑥

NEMA Size	Maximum Horsepower		HMCP Trip Rating in Amperes	Compartments Required	Catalog Number			
	208/230 Volts	460 – 575 Volts			Coil Voltage			
					120	240	480	550
Class 206 — Three-Phase Non-reversing Combination Starters								
1	—	1	.69 – 2.5	1	6263A01G08	6263A01G07	6263A01G07	6263A01G09
1	1	2	1.5 – 5.7	1	6263A01G11	6263A01G10	6263A01G10	6263A01G12
1	3	5	3.4 – 12.6	1	6263A01G14	6263A01G13	6263A01G13	6263A01G15
1	7-1/2	10	6.9 – 25.2	1	6263A01G03	6263A01G01 ④	6263A01G01 ④	6263A01G05
2	15	25	11.5 – 42.1	1	6263A01G04	6263A01G02 ④	6263A01G02 ④	6263A01G06
3	30	50	23 – 84.5	2	6362A02G01	6362A02G02	6362A02G03	6362A02G04
4	50	100	34.6 – 126.7	2	6263A03G01	6263A03G02	6263A03G03	6263A03G04
Class 216 — Three-Phase Reversing Combination Starters								
1	3 – 7-1/2 ⑤	5 – 10 ⑤	3.4 – 25.2	2	6263A04G01	6263A04G02	6263A04G03	6263A04G04
2	10 – 15	15 – 25	6.9 – 42.1	2	6263A04G05	6263A04G06	6263A04G07	6263A04G08

④ Dual voltage coil wired for 480 volts; can be field converted to 240 volts.
⑤ For smaller hp, order by description for proper selection of MCP.
⑥ Does not include heaters. See **Pages 12-7** and **12-8**.

Heater Selection . . . . . **Pages 12-7, 12-8**
Modifications . . . . . **Page 12-3**
Dimensions . . . . . **Page 12-9**

Product Selection

When Ordering Specify

- Orders for modules, kits, etc. for field assembly should be ordered by Catalog Number.
- Orders for factory assembled units should be placed on the Customer Support Center. All modules, kits, etc. should be ordered by style number with a written description of desired modifications. (Use the modification number where possible).
- Provide a sketch or written description to define the desired locations of the modules in each enclosure along with your order.

Fusible Main and Feeder Switch Modules (Three-Pole)

Table 12-8. Fusible Main and Feeder Switch Modules Product Selection (Three-Pole) ①

Volts	Switch Amperes	Fuse Clip Amperes	Compartments Required	Catalog Number
Fusible Switch with NEC Fuse Clips — Module with One Switch				
250	30	30	1	**6263A14G01**
600	30	30	1	**6263A14G02**
250	60	60	1	**6263A14G03**
600	60	60	1	**6263A14G04**
250	60	100	1	**6263A14G05**
250	100	100	2	**6263A15G01**
600	100	100	2	**6263A15G02**
250	100	200	2	**6263A15G03**
600	100	200	2	**6263A15G04**

① Includes door.

Note: Two switches 60 amperes and below can be mounted in one compartment. Order by description. If second fusible switch is to be mounted in the field, order modification kit Catalog Number **6263A18G01**, as shown on **Page 12-3**. Doors for fusible switch modules have cutout for second operating handle.

Main and Feeder Air Circuit Breaker Modules

Table 12-9. Main and Feeder Air Circuit Breaker Modules Product Selection ②

Amperes	Poles	Compartments Required	Module with One 600 Volt Therm./Mag. Breaker Catalog Number
Type HFD			
15	3	1	**6263A16G01**
20	3	1	**6263A16G02**
30	3	1	**6263A16G03**
40	3	1	**6263A16G04**
50	3	1	**6263A16G05**
70	3	1	**6263A16G06**
90	3	1	**6263A16G07**
100	3	1	**6263A16G08**
Type HJD			
125	3	2	**6263A17G01**
150	3	2	**6263A17G02**
175	3	2	**6263A17G03**
200	3	2	**6263A17G04**
225	3	2	**6263A17G05**

② Includes door.

Note: Two breakers 100 amperes and below can be mounted in one compartment. Order by description. If second breaker is to be mounted in the field, order modification kit Catalog Number **6263A18G02**, from **Page 12-3**. Doors for breaker modules have cutout for second operating handle.

Modifications ..... **Page 12-3**
Dimensions ..... **Page 12-9**

Product Selection

When Ordering Specify

- Total number of compartments required.
- Quantity of four compartment and/or six compartment enclosures required. (Include future space requirements.)

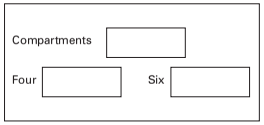

Figure 12-1. Compartments

Table 12-10. Enclosures and Blank Doors Product Selection

Description	Catalog Number
Type 1 Enclosure ① with four compartments with six compartments	 **6262A70G01** **6262A70G02**
Dust and Weather Resistant Enclosure to House Type 1 Enclosure with four compartments with six compartments	 **6262A70G05** **6262A70G06**
Blank Door for One Compartment Blank Door for Two Compartments and Blank Back Pan for Two Compartments	**6262A70G03** **6262A70G04**

① Incoming line and extension terminals included are suitable for either copper or aluminum conductors from 6 – 350 kcmil.

Modifications ..... **Page 12-3**
Dimensions ..... **Page 12-9**

Heater Selection

The full load current shown on each motor nameplate should be checked with the heater application tables to assure that the heaters chosen with each starter unit agree with this table and with the actual motor protection requirements. Do not rely on code marking on the heater to indicate current rating. In making this check the following Notes 1 – 3 regarding special conditions should be considered.

Notes on Overload Heater Application

1. The Heater Application Tables provide 115 to 125% protection for motors rated 40°C having a service factor of 1.15 and 1.25.
2. Use one smaller heater when:
   a. The motor is rated 50° or 55°C.
   b. The motor has a service factor of 1.00.
   c. A maximum of 115 protection is desired.
3. Overload relays are ambient compensated, therefore base heater selection on motor current, and disregard ambient temperature differences.

The relay will provide protection against abnormal load conditions to current values exceeding normal locked rotor current. The relay should be protected against short circuits by providing branch circuit protection per National Electric Code, but not to exceed the maximum fuse ratings listed in the Heater tables.

Note: To provide continued protection against fire and shock hazard the complete overload relay must be replaced if burn out of the current element occurs.

Overload Relays, 3-Pole Protection

Table 12-11. Heater Selection — Starter Size 1 ①

Motor Full Load Current in Amperes ②	Style Number	Max. Breaker or Fuse	Catalog Number
0.51 – 0.55	117C524G10	2	**FH10**
0.56 – 0.62	117C524G11	2	**FH11**
0.63 – 0.68	117C524G12	2.5	**FH12**
0.69 – 0.75	117C524G13	3	**FH13**
0.76 – 0.83	117C524G14	3	**FH14**
0.84 – 0.91	117C524G15	3	**FH15**
0.92 – 1.00	117C524G16	3	**FH16**
1.01 – 1.11	117C524G17	4	**FH17**
1.12 – 1.22	117C524G18	4	**FH18**
1.23 – 1.34	117C524G19	5	**FH19**
1.35 – 1.47	117C524G20	5	**FH20**
1.48 – 1.62	117C524G21	5	**FH21**
1.63 – 1.78	117C524G22	6	**FH22**
1.79 – 1.95	117C524G23	6	**FH23**
1.96 – 2.15	117C524G24	8	**FH24**

① Use in fusible starters only. Do not use with circuit breakers.
② Ambient compensated.

Table 12-12. Heater Selection — Starter Size 1 & 2

Motor Full Load Current in Amperes ④	Style Number	Max. Breaker or Fuse	Catalog Number
2.16 – 2.35 ③	117C524G25	8	**FH25**
2.36 – 2.58 ③	117C524G26	8	**FH26**
2.59 – 2.83 ③	117C524G27	10	**FH27**
2.84 – 3.11 ③	117C524G28	10	**FH28**
3.12 – 3.42 ③	117C524G29	12	**FH29**
3.43 – 3.73 ③	117C524G30	12	**FH30**
3.74 – 4.07	117C524G31	15	**FH31**
4.08 – 4.39	117C524G32	15	**FH32**
4.40 – 4.87	117C524G33	15	**FH33**
4.88 – 5.3	117C524G34	20	**FH34**
5.4 – 5.9	117C524G35	20	**FH35**
6.0 – 6.4	117C524G36	20	**FH36**
6.5 – 7.1	117C524G37	25	**FH37**
7.2 – 7.8	117C524G38	25	**FH38**
7.9 – 8.5	117C524G39	30	**FH39**
8.6 – 9.4	117C524G40	30	**FH40**
9.5 – 10.3	117C524G41	35	**FH41**
10.4 – 11.3	117C524G42	35	**FH42**
11.4 – 12.4	117C524G43	40	**FH43**
12.5 – 13.5	117C524G44	45	**FH44**
13.6 – 14.9	117C524G45	45	**FH45**
15.0 – 16.3	117C524G46	50	**FH46**
16.4 – 18.0	117C524G47	60	**FH47**
18.1 – 19.8	117C524G48	60	**FH48**
19.9 – 21.7	117C524G49	70	**FH49**
21.8 – 23.9	117C524G50	80	**FH50**
24.0 – 26.2	117C524G51	80	**FH51**
26.3 – 28.7	117C524G52	90	**FH52**

③ Use in fusible starters only. Do not use with circuit breakers.
④ Ambient compensated.

Table 12-13. Heater Selection — Starter Size 2

Motor Full Load Current in Amperes ⑤	Style Number	Max. Breaker or Fuse	Catalog Number
28.8 – 31.4	117C524G53	100	**FH53**
31.5 – 34.5	117C524G54	125	**FH54**
34.6 – 37.9	117C524G55	125	**FH55**
38.0 – 41.5	117C524G56	125	**FH56**
41.6 – 45.5	117C524G57	150	**FH57**

⑤ Ambient compensated.

Table 12-14. Heater Selection — Starter Size 3 & 4

Motor Full Load Current in Amperes ①	Style Number	Max. Breaker or Fuse	Catalog Number
19.0 – 20.8	179C319G02	80	**FH72**
20.9 – 22.9	179C319G03	90	**FH73**
23.0 – 25.2	179C319G04	100	**FH74**
26.3 – 27.8	179C319G05	100	**FH75**
27.9 – 30.6	179C319G06	110	**FH76**
30.7 – 33.5	179C319G07	125	**FH77**
33.6 – 37.5	179C319G08	150	**FH78**
37.6 – 41.5	179C319G09	150	**FH79**
41.6 – 46.3	179C319G10	175	**FH80**
46.4 – 50.0	179C319G11	200	**FH81**
51.0 – 55.0	179C319G12	200	**FH82**
56.0 – 61.0	179C319G13	225	**FH83**
62.0 – 66.0	179C319G14	250	**FH84**
67.0 – 73.0	179C319G15	250	**FH85**
74.0 – 79.0	179C319G16	250	**FH86**
80.0 – 87.0	179C319G17	300	**FH87**
88.0 – 90.0	179C319G18	350	**FH88**

① Ambient compensated.

Table 12-15. Heater Selection — Starter Size 4

Motor Full Load Current in Amperes ②	Style Number	Max. Breaker or Fuse	Catalog Number
88.0 – 95.0	179C319G18	350	**FH88**
96.0 – 105.0	179C319G19	300	**FH89**
106.0 – 116.0	179C319G20	300	**FH90**
117.0 – 128.0	179C319G21	350	**FH91**

② Ambient compensated.

Dimensions

Dimension and Wiring Arrangements

Type 1 enclosures are 32 or 48 inches (813 or 1219 mm) wide, 26 inches (660 mm) high and 7 inches (178 mm) deep, with provisions for four-bolt wall mounting. Enclosures may be grouped together by nippling through the knockouts provided.

Load and control conduits may enter at the top or bottom. Instructions for overload heater installation are attached to each starter door.

Dust and weather resistant enclosures for 4 or 6 module units are available. These enclosures are 34 or 50 inches (864 or 1270 mm) wide, 31 inches (787 mm) high and 11.75 inches (298 mm) deep.

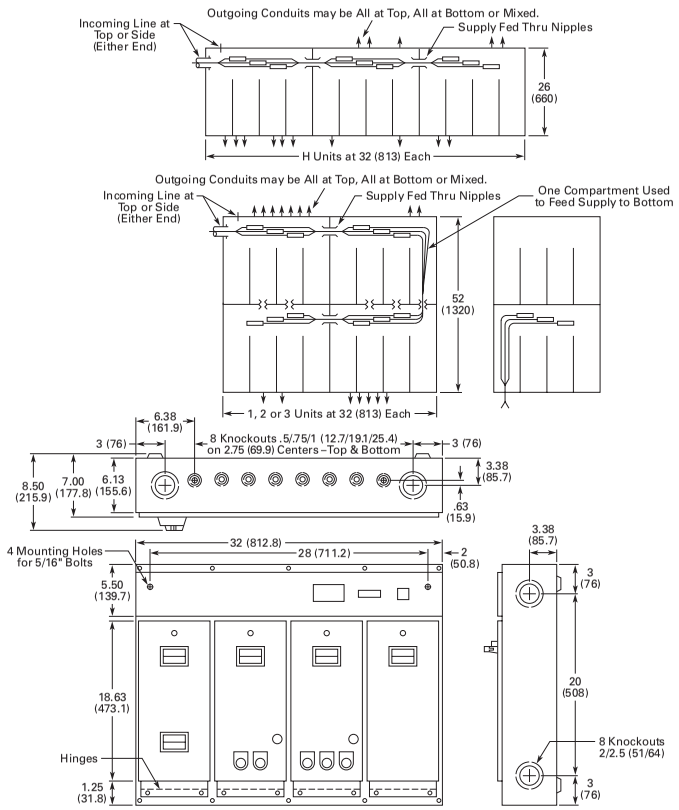

Note: Six module units are 48 inches wide.

Figure 12-2. Approximate Dimensions and Wiring Arrangements, Four Module Unit

Table 12-16. Enclosures and Blank Doors

Description	Approximate Dimensions in Inches (mm)			Shipping Weight Lbs. (kg)
	Width	Height	Depth	
Type 1 Enclosure ①				
with four compartments	32 (813)	26 (660)	7 (178)	50 (23)
with six compartments	48 (1219)	26 (660)	7 (178)	70 (32)
Dust and Weather Resistant Enclosure to House Type 1 Enclosure				
with four compartments	34 (864)	31 (787)	11.75 (298)	35 (16)
with six compartments	50 (1270)	31 (787)	11.75 (298)	50 (23)
Blank Door for One Compartment	—	—	—	3 (1.4)
Blank Door for Two Compartments and Blank Back Pan for Two Compartments	—	—	—	8 (3.6)

① Incoming line and extension terminals included are suitable for either copper or aluminum conductors from 6 to 350 kcmil.

Shipping Weights

Table 12-17. Module Weights

Description	Weight Lbs. (kg)
Fusible Switches	
30 – 60 Amperes	10 (4.5)
100 Amperes	15 (6.8)
Circuit Breakers	
15 – 100 Amperes	10 (4.5)
125 – 225 Amperes	20 (9.1)

Description	Weight Lbs. (kg)
Starters — A204, A206	
Sizes 1, 2	15 (6.8)
Sizes 3, 4	25 (11.4)
Starters — A214	
Sizes 1, 2	15 (6.8)
Starters — A216	
Sizes 1, 2	20 (9.1)

Manual Motor Control

Contents

Description *Page*

Single-Phase Starters
MS Series
Product Description 13-2
Accessories 13-2
Product Selection 13-3
Dimensions 13-4

Single- & Three-Phase Starters
Type B100
Product Description 13-5
Accessories 13-5
Product Selection 13-6
Dimensions 13-8

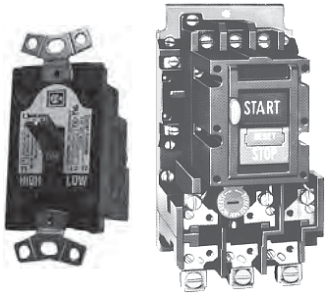

Manual Motor Control

Modular Toggle Operated Starter

Product Description

- Eaton's Cutler-Hammer® MS Motor Starter is a compact, versatile unit featuring heavy sliding contacts as well as "quick-make" and "quick-break" mechanism
- Standard with large pressure type terminals, straight-through wiring and a trip-free handle mechanism
- The "plug-in" heater element is keyed to ensure proper positioning and an adjustable knob allows a setting of plus or minus ten percent of the nominal heater rating

Application Description

The MS Manual Motor Starter provides manual control and overload protection to single-phase motors. By utilizing the interchangeable heater elements, the starter can protect motors ranging from .40 amps up to 16.0 amps. Ideal for HVAC applications.

Features

- Compact size
- Trip-free handle mechanism
- Keyed heater elements to ensure proper installation
- Starters available with red pilot light
- The operating handle of the enclosed units can be locked in the OFF position
- Enclosures are offered in Type 1, 3, 4 and 5
- Hazardous locations cast aluminum enclosures are available rated for Type 7, Class I, Group D (vapors) and Type 9, Class II, Groups E, F an G (dust).

Instructional Leaflet

IL12987G

Standards and Certifications

Note: See **Page 18-2** for additional information on Standards and Certifications that apply to all Cutler-Hammer Enclosed Control products.

- UL File No. E1922, Category NLRV (for motor controller)
- CSA File No. LR39402-6, Class 3211-05
- ABS Type Approved

Accessories

Table 13-1. MS Accessories

Description	Catalog Number
Pilot Light Kit (NEMA 1 Enclosure and Flush Plates)	**MSPT**
Box, 1 Unit (NEMA 1 Enclosure)	**MS1BN**
Cover, 1 Unit (NEMA 1 Enclosure)	**MS1CN**
Flush Plate, 1 Unit (Steel)	**MS1FN**
Flush Plate, 1 Unit (Stainless Steel)	**MS1DN**
Handle Guard (Padlockable for NEMA 1 Enclosure and Flush Plates)	**MSLG**

Product Selection

When Ordering Specify

- Catalog Number of Manual Motor Starter
- Heater Pack selection
- Any required Accessories
- Heater Coil selection according to the motor full load current requirements

Table 13-2. Product Selection — MS Series Starters

Number of Poles	Horsepower	Voltage	Catalog Number ①
Open Type			
1	1 1/4 1/4	120/240V, 277V AC 120/240V DC 32V DC	**MST01**
2	1 1 1/4	120/240V, 277V AC 120/240V DC 32V DC	**MST02**
Flush Plate (No Enclosure Included)			
1	**Flush Plate Type**	Switch Only Switch with Pilot Light	**MST01FN** **MST01FN1P**
2	General Purpose	Switch Only Switch with Pilot Light	**MST02FN** **MST02FN1P**
1	Stainless Steel	Switch Only Switch with Pilot Light	**MST01DN** **MST01DN1P**
2		Switch Only Switch with Pilot Light	**MST02DN** **MST02DN1P**
Enclosed Types			
1	**Enclosure Type**	Switch Only Switch with Pilot Light	**MST01SN** **MST01SN1P**
2	General Purpose Type 1	Switch Only Switch with Pilot Light	**MST02SN** **MST02SN1P**
1	Waterproof Type 3, 4 & 5	Through Hub	**MST01AH**
2		Through Hub	**MST02AH**
1	Hazardous Location ② Types 7D, 9E, 9F & 9G	Through Hub	**MST01EH**
2		Through Hub	**MST02EH**

① Does not include heater. Select heater from **Table 13-3**.
② Type 7D = Type 7, Class I, Group D; Type 9E, 9F and 9G = Type 9, Class II, Groups E, F and G.

Table 13-3. Heater Selection for MS Starters

Motor Full Load Current	Catalog Number	Motor Full Load Current	Catalog Number	Motor Full Load Current	Catalog Number	Motor Full Load Current	Catalog Number
.4 – .43	**MSH-5A**	1.04 – 1.15	**MSH1-3A**	2.72 – 2.95	**MSH3-4A**	7.04 – 7.74	**MSH8-8A**
.44 – .48	**MSH-55A**	1.16 – 1.27	**MSH1-45A**	2.96 – 3.27	**MSH3-7A**	7.75 – 8.46	**MSH9-7A**
.49 – .53	**MSH-61A**	1.28 – 1.35	**MSH1-6A**	3.28 – 3.59	**MSH4-1A**	8.47 – 9.35	**MSH10-6A**
.54 – .58	**MSH-67A**	1.36 – 1.51	**MSH1-7A**	3.60 – 3.99	**MSH4-5A**	9.36 – 10.30	**MSH11-7A**
.59 – .64	**MSH-74A**	1.52 – 1.67	**MSH1-9A**	4.00 – 4.39	**MSH5-0A**	10.31 – 11.35	**MSH12-9A**
.65 – .71	**MSH-81A**	1.68 – 1.83	**MSH2-1A**	4.40 – 4.79	**MSH5-5A**	11.36 – 12.47	**MSH14-2A**
.72 – .78	**MSH-89A**	1.84 – 1.99	**MSH2-3A**	4.80 – 5.26	**MSH6-0A**	12.48 – 13.67	**MSH15-6A**
.79 – .87	**MSH-98A**	2.00 – 2.23	**MSH2-5A**	5.27 – 5.83	**MSH6-6A**	13.68 – 15.12	**MSH17-1A**
.88 – .95	**MSH1-1A**	2.24 – 2.47	**MSH2-8A**	5.84 – 6.39	**MSH7-3A**	15.13 – 16.00	**MSH18-6A**
.96 – 1.03	**MSH1-2A**	2.48 – 2.71	**MSH3-1A**	6.40 – 7.03	**MSH8-0A**		

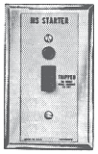

Switch and Pilot Light Mounted on Flush Plate

Switch and Pilot Light Mounted in Type 1 Enclosure

Waterproof Type 3, 4 & 5

Hazardous Location Type 7D, 9E, 9F & 9G

Typical Heater

Heater Element Installation

Dimensions. . . . . Page 13-4

Dimensions

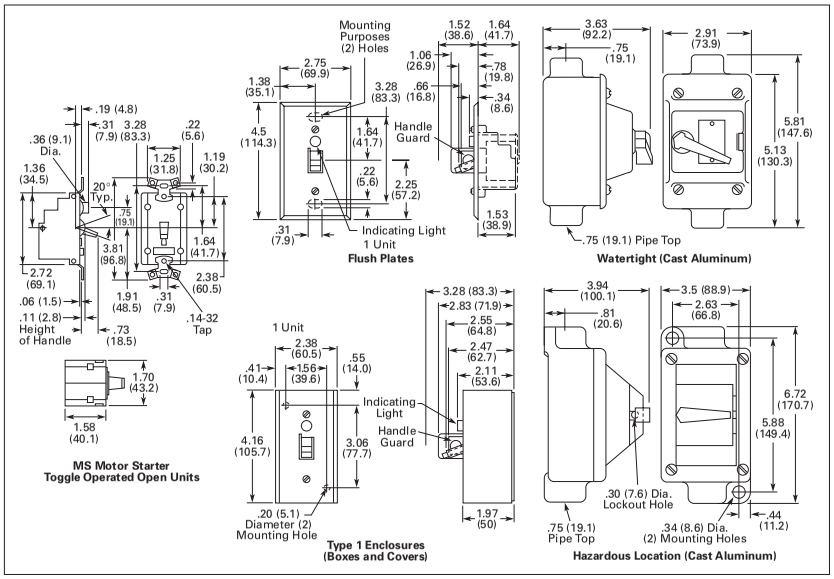

Figure 13-1. Approximate Dimensions in Inches (mm)

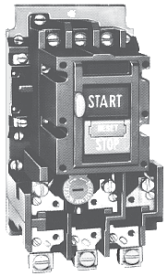

Pushbutton Operated

Product Description

Eaton's Cutler-Hammer® B100 Manual Motor Starters can be used in single-phase applications rated 3 hp at 240V AC or 2 hp at 230V DC. The starter can also be rated for three-phase applications up to 10 hp at 600V AC.

There are two methods of operation for the B100 Manual Starter. It can be ordered with a toggle switch operator or a START/STOP pushbutton operator.

Application Description

The B100 family of Manual Motor Starters provides manual control, as well as overload protection, to both single-phase and three-phase motors. The starter protects motors up to 38.9 amp single-phase and 26.8 amp three-phase with the appropriate heater selection.

Features

- Includes three-pole bimetallic overload relay
- Straight-through wiring
- Field mounted auxiliary contacts
- Available in Type 1, 4, 7, 9 and 12 enclosures with toggle operation (Type 1 enclosure for pushbutton operator)
- Standard with a lockout device to lock motor in the OFF position

Instructional Leaflet

IL14890

Standards and Certifications

Note: See **Page 18-2** for additional information on Standards and Certifications that apply to all Cutler-Hammer Enclosed Control products.

- UL File No. E19222, Category NLRV (for motor controller)
- CSA File No. LR39402-6, Class 3211-05 (Open Starters)
- CSA File No. LR54517-1, Class 3211-05 (Closed Starters)
- ABS Type Approved

Technical Data

Table 13-4. Specifications

NEMA Size	Maximum hp for AC Ratings ①			Maximum hp for DC Ratings	
	120V AC	208 – 240V AC	480 – 600V AC	115V DC	230V DC
2-Pole, Single-Phase					
M-0	1	2	—	1	1-1/2
M-1	2	3	—	1-1/2	2
3-Pole, Three-Phase					
M-0	2	3	5	—	—
M-1	3	7-1/2	10	—	—

① Ratings up to 3 hp, 3-phase are suitable for group fusing.

Options

Table 13-5. Factory Modifications

Description	Catalog Number ② Suffix
Pushbutton operator (open and Type 1 only)	**A**
Without lockoff (open only)	**X**

② Add Suffix letter to starter Catalog Number Ex: B100MOC**A**.

Accessories

Table 13-6. Accessories

Description	Catalog Number
Field Mounting Kits	
Auxiliary Contact —	
1NO	**B1A**
1NC	**B1B**
Red Pilot Light —	
120/60 (Type 1 Enc. Only)	**LK-21**
208-240/6 (Type 1 Enc. Only)	**LK-22**
480-600/60 (Type 1 Enc. Only)	**LK-26**
For Type 4 and 12 Enclosures Only	
Red Pilot Light —	
120V	**LK-41**
240V	**LK-42**

Product Selection

When Ordering Specify

- Catalog Number of Starter with application modifications
- Heater Pack selection — A three-phase starter requires three heaters, and a single-phase starter requires two heaters
- Any required Accessories

Table 13-7. Product Selection — Toggle and Pushbutton Operated Starters

NEMA Size	Open Type Toggle Handle	Enclosed			
		Type 1 General Purpose	Type 4 Watertight, Stainless Steel ①	Type 7D, 9E, 9F & 9G for Hazardous Locations ②④	Type 12 Dust-Tight
	Catalog Number ③	Catalog Number ③	Catalog Number ③	Catalog Number ③	Catalog Number ③
Type B100 Non-reversing 2-Pole (For Single-Phase Motors and DC)					
M-0	B100M0B	B100S0B	B100W0B	B100U0B	B100J0B
M-1	B100M1B	B100S1B	B100W1B	B100U1B	B100J1B
Type B100 Non-reversing 3-Pole (For Polyphase Motors) ④					
M-0	B100M0C	B100S0C	B100W0C	B100U0C	B100J0C
M-1	B100M1C	B100S1C	B100W1C	B100U1C	B100J1C

① One 1-inch chrome hub supplied on each end.
② Type 7D = Type 7, Class I, Group D. Type 9E, 9F and 9G = Type 9, Class II, Groups E, F and G.
③ Does not include heaters. Select Catalog Numbers of heaters from **Table 13-8**.
④ Tapped for 1-inch conduit on each end.

Toggle Operated

Type 1 Enclosure

Heater Selection ..... **Page 13-7**
Dimensions ..... **Page 13-8**

Table 13-8. Heater Selection

Motor Full Load Current	Max. Fuse Amps	Catalog Number	Motor Full Load Current	Max. Fuse Amps	Catalog Number
Single-Phase Enclosed Starters ①			**Three-Phase Enclosed Starters ②**		
.28 – .29	1	**FH03**	.25 – .26	1	**FH03**
.30 – .33	1	**FH04**	.27 – .29	1	**FH04**
.34 – .36	1	**FH05**	.30 – .32	1	**FH05**
.37 – .40	1	**FH06**	.33 – .35	1	**FH06**
.41 – .45	1	**FH07**	.36 – .39	1	**FH07**
.46 – .50	1	**FH08**	.40 – .44	1	**FH08**
.51 – .56	1	**FH09**	.45 – .49	1	**FH09**
.57 – .63	2	**FH10**	.50 – .55	1	**FH10**
.64 – .70	2	**FH11**	.56 – .61	2	**FH11**
.71 – .78	2	**FH12**	.62 – .68	2	**FH12**
.79 – .86	2	**FH13**	.69 – .75	2	**FH13**
.87 – .95	3	**FH14**	.78 – .83	2	**FH14**
.96 – 1.04	3	**FH15**	.84 – .91	3	**FH15**
1.05 – 1.14	3	**FH16**	.92 – 1.00	3	**FH16**
1.15 – 1.25	4	**FH17**	1.01 – 1.10	3	**FH17**
1.26 – 1.39	4	**FH18**	1.11 – 1.22	4	**FH18**
1.40 – 1.54	5	**FH19**	1.23 – 1.35	4	**FH19**
1.55 – 1.71	5	**FH20**	1.36 – 1.50	5	**FH20**
1.72 – 1.89	6	**FH21**	1.51 – 1.66	5	**FH21**
1.90 – 2.10	7	**FH22**	1.67 – 1.84	6	**FH22**
2.11 – 2.32	8	**FH23**	1.85 – 2.03	7	**FH23**
2.33 – 2.54	8	**FH24**	2.04 – 2.23	7	**FH24**
2.55 – 2.79	9	**FH25**	2.24 – 2.45	8	**FH25**
2.80 – 3.07	10	**FH26**	2.46 – 2.69	9	**FH26**
3.08 – 3.36	10	**FH27**	2.70 – 2.95	10	**FH27**
3.37 – 3.68	10	**FH28**	2.96 – 3.23	10	**FH28**
3.69 – 4.03	10	**FH29**	3.24 – 3.53	10	**FH29**
4.04 – 4.40	15	**FH30**	3.54 – 3.85	10	**FH30**
4.41 – 4.81	15	**FH31**	3.86 – 4.22	10	**FH31**
4.82 – 5.26	15	**FH32**	4.23 – 4.61	15	**FH32**
5.27 – 5.74	15	**FH33**	4.62 – 5.03	15	**FH33**
5.75 – 6.26	20	**FH34**	5.04 – 5.49	15	**FH34**
6.27 – 6.83	20	**FH35**	5.50 – 5.99	20	**FH35**
6.84 – 7.45	25	**FH36**	6.00 – 6.53	20	**FH36**
7.46 – 8.11	25	**FH37**	6.54 – 7.11	25	**FH37**
8.12 – 8.81	30	**FH38**	7.12 – 7.73	25	**FH38**
8.82 – 9.58	30	**FH39**	7.74 – 8.40	25	**FH39**
9.59 – 10.40	35	**FH40**	8.41 – 9.12	30	**FH40**
10.41 – 11.30	35	**FH41**	9.13 – 9.89	35	**FH41**
11.40 – 12.20	40	**FH42**	9.90 – 10.70	35	**FH42**
12.30 – 13.50	45	**FH43**	10.80 – 11.80	40	**FH43**
13.60 – 14.90	50	**FH44**	11.90 – 13.00	45	**FH44**
15.00 – 16.00	50	**FH45**	13.10 – 14.00	50	**FH45**
16.10 – 17.10	60	**FH46**	14.10 – 15.00	50	**FH46**
17.20 – 18.30	60	**FH47**	15.10 – 16.10	50	**FH47**
18.40 – 19.70	70	**FH48**	16.20 – 17.30	60	**FH48**
19.80 – 21.20	70	**FH49**	17.40 – 18.60	60	**FH49**
21.30 – 22.80	80	**FH50**	18.70 – 20.00	70	**FH50**
22.90 – 24.50	88	**FH51**	20.10 – 21.50	70	**FH51**
24.60 – 26.40	90	**FH52**	21.60 – 23.20	80	**FH52**
26.50 – 28.50	90	**FH53**	23.30 – 25.00	80	**FH53**
28.60 – 30.80	100	**FH54**	25.10 – 26.80	90	**FH54**
30.90 – 33.30	110	**FH55**			
33.40 – 36.00	125	**FH56**			
36.10 – 38.90	125	**FH57**			

① Single-Phase Starters require two overload heaters.
② Three-Phase Starters require three overload heaters.

Note: FH Series heaters are for type B100 manual motor starters. Heater element selection is based on motor nameplate's listed full load amperes. Trip rating of this series of elements is 125% of minimum motor full load amperes listed for the element.

When motor and overload relay are in the same ambient and the service factor of the motor is 1.15 to 1.25, select heaters from the heater selection table. If the service factor is 1.0 or less (including zero), or a maximum of 115% protection is desired, select a heater one size smaller than indicated for the amperage range required.

Dimensions

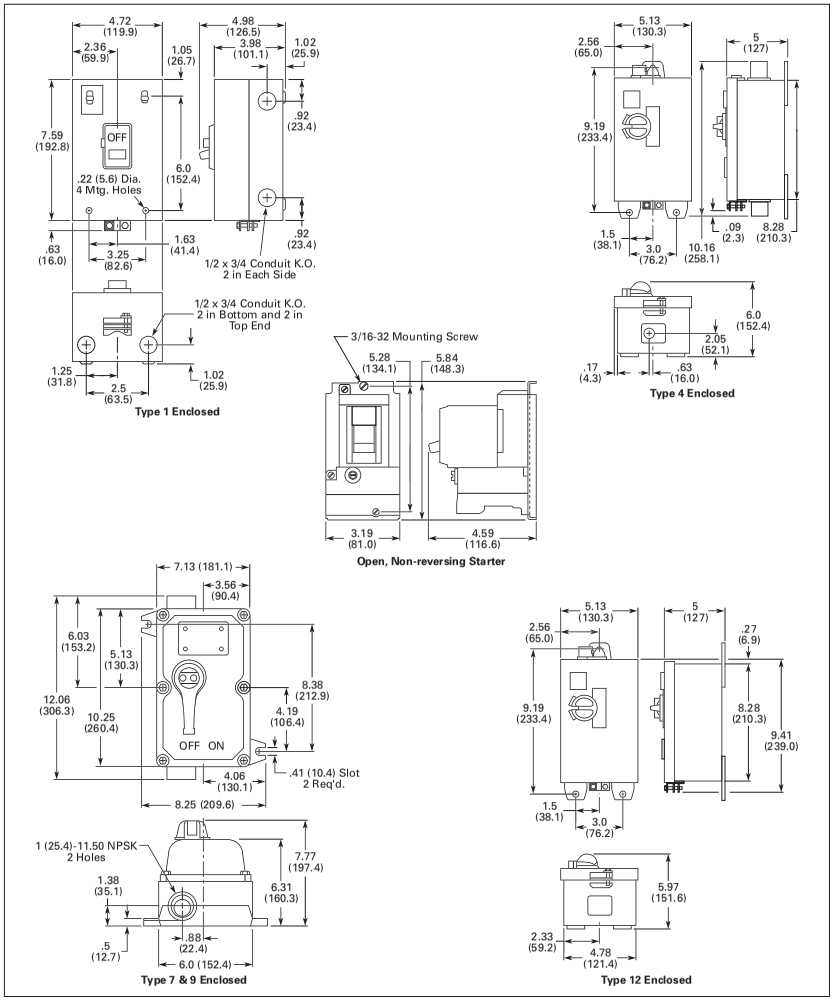

Figure 13-2. Approximate Dimensions in Inches (mm)

Alternate Enclosures

Contents

Description	Page
Enclosure Options	
Overview	14-2
Nonmetallic Enclosures	14-2
316 Stainless Steel Enclosures	14-2
Type 3R Stainless Steel Enclosures	14-2
Type 7/9 Explosion Proof Enclosures	14-3
Paint Options	14-3
OEM Panel Solutions	14-3
Ordering Information	14-4

Enclosure Options

Overview

Eaton's Cutler-Hammer® packaged control line offers a full line of enclosure options. Application and environmental requirements can change from location to location, therefore so do the enclosure sizes and types. This section of the catalog discusses some of the capabilities of the packaged control line. For other applications or enclosure options, refer to the product specific sections of this catalog or contact your local distributor.

Nonmetallic Enclosure

14

Nonmetallic Enclosures

Eaton's Cutler-Hammer packaged control product line offers a full line of nonmetallic enclosures for your application needs. This includes the NEMA, Lighting, Soft Starter and custom product lines.

Features

- Designed to meet UL, CSA and CE standards for enclosures
- Type 4X enclosure rating
- Opaque and Transparent covers available in most styles
- Available with gasketed tops
- Available with hinged cover options
- Suitable for use in indoor and outdoor applications

Options

- Types of covers: screw-on or hinged
- Transparent or Opaque covers in most versions
- DIN rail mounting or panel mounting
- Additional holes/knockouts can be added for easy installation
- Cover control
- Oversized enclosures
- Type 1, 12 and 3R versions

For ordering this option, change the 7th digit in the Catalog Number to a **5** (i.e. ECN2221AAF becomes ECN2225AAF).

316 Stainless Steel Enclosure

316 Stainless Steel Enclosures

Many people believe that stainless steel is not susceptible to corrosion. While stainless steel greatly improves corrosion resistance, it is still potentially susceptible to corrosion. Certain chemicals, salts, chlorides and acid can corrode stainless steel. Corrosion resistance varies among the different grades of stainless steel due to the chemical composition of the individual grade and is the result of the formation of an oxide film on the surface of the metal. This film can be damaged when used in harsh environments containing chlorides, chemicals and salts, which attack the film and lead to some types of corrosion.

There are many forms of corrosion beyond that of well-known rust. Other common forms of corrosion that may come into play at customer installations include galvanic or two-metal corrosion and pitting corrosion. Galvanic corrosion occurs when two dissimilar metals are placed in contact or are electrically connected. A potential difference produces electron flow between the metals that results in increased corrosion of the less corrosion-resistant metal and a decrease in corrosion of the more resistant material than would occur if the metals were not in contact. Pitting is typically in the form of localized attack that creates holes in the metal. These holes may be very small and difficult to detect due to accompanying rust. 304-grade stainless steel is susceptible to this form of corrosion in certain atmospheres.

Fortunately, there are options available for applications where 304-grade stainless steel is susceptible to corrosion. Enclosures manufactured with 316-grade stainless steel offer even better corrosion resistance to most chemicals, salts and acids and are better suited for installation in marine atmospheres. In marine atmospheres, 304-grade stainless steel may develop staining with patches of yellowish-brown film. 316-grade stainless steel yields improved pitting corrosion resistance versus other grades of stainless (i.e. 304-grade) where brines, highway de-icing salts or chlorides are present.

For ordering this option, change the 7th digit in the Catalog Number to a **9** (i.e. ECN2221AAF becomes ECN2229AAF).

Type 3R Stainless Steel Enclosures

Often, customers are looking for enclosures to install outdoors where they will be exposed to harsh environmental conditions including salt, acid rain, chemical run offs and mist. In these applications, the unit will not be exposed to high-pressure wash downs. Therefore, the customer does not need a fully rated Type 4 enclosure, but rather a product with a higher resistance to corrosion than standard carbon steel. This product design meets the customers' needs.

Pump Panel applications will be the primary use for the Type 3R Stainless Steel option. It offers customers the opportunity to replace their carbon steel Type 3R enclosures with a stainless steel unit that will help resist rusting. For pump panels (ECN54/55, ECT54/55 and ECP54/55), this option is especially attractive.

For ordering this option, change the 7th digit in the Catalog Number to an **A** (i.e. ECN2221AAF becomes ECN222AAAF).

Hazardous Location Enclosure

Type 7/9 Explosion Proof Enclosures

Some applications are exposed to areas in which hazardous materials are handled or stored. These environments require explosion proof enclosures.

Class I locations require the type of explosion-proof electrical equipment where, in case of explosion, the hazardous flames would be contained. In Class II or III locations, dust, fibers and flyings are the combustible materials and it is only necessary to keep these materials out of the electrical equipment (where an arc may take place) and to maintain safe external temperatures.

Further refinement created for the purpose of testing and approving electrical equipment divides Class I into four separate designations: A, B, C, D and Class II into three separate designations; E, F and G. Underwriters Laboratories test and approve electrical equipment for the specific groups.

For more descriptions on Code and Class definitions, see **Tab 11**, **Page 11-3**.

For ordering this option, change the 7th digit in the Catalog Number to a **6** for Bolted design, and **7** for Threaded design. (i.e. ECN2221AAF becomes ECN2227AAF).

Paint Options

With a full line paint shop, we can offer custom solutions for our customers. In many cases this includes custom colors for your panels. This helps in establishing brand identity for our OEM customers and differentiates them from their competition.

OEM Panel Solutions

With one of the largest steel fabrication shops available, we are able to quickly design a custom enclosure for your company's particular needs. Also, with our own custom paint facilities, we can customize the look and feel of your control panels to meet your corporate image.

With our large staff of professional engineers, we are able to quickly and efficiently design your panels for you, utilizing the latest technologies. Our abilities include:

- AutoCAD
- Mechanical Desktop/Inventor
- Mechanical Engineering
- Electrical Engineering
- UL Test Certification
- Short Circuit/Thermal Testing
- Prototyping

Due to our focus on control panels, we have become highly efficient and strive to exceed our customer expectations on performance, quality and delivery.

Eaton can offer the OEM a wide range of solutions for your control and production needs, including:

- Agency testing and certifications
- Flexible ordering schedules and volumes
- Wide range of options for value selling by the OEM
- Fast prototyping
- Just-in-time delivery
- Drop-in technology for their systems
- On-site inspections

Ordering Information

Table 14-9. Catalog Numbering System

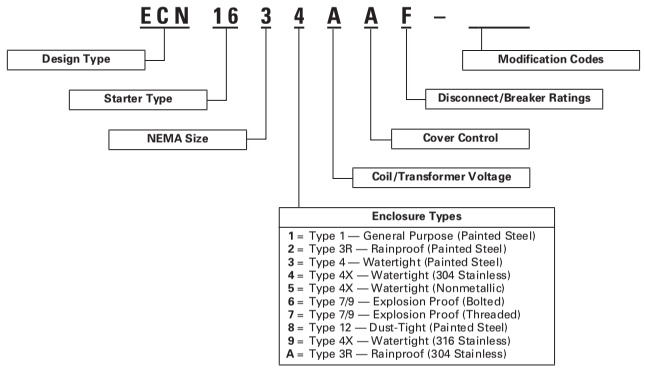

Enclosed Dimensions

Contents

Description — *Page*

Box References
- NEMA Full Voltage Control — *IT.*/Freedom 15-2
- Multispeed Starters — Freedom 15-4
- IEC Control — *XT* 15-5
- Lighting Contactors 15-5
- Solid-State Reduced Voltage Starters 15-7
- Reduced Voltage Starters — Freedom 15-8
- Adjustable Frequency Drives 15-8
- Pump Panels 15-8
- Duplex Pump Panels 15-9
- HVAC Control 15-9
- Vacuum Break 15-9

Box Dimensions 15-10

Locating dimensions for an enclosed control device is simple:

1. Find the device's NEMA Size/IEC Frame within the Box References pages and read across to its Box No.
2. Find that Box No. (numeral or letter) in the Box Dimension pages.

NEMA Full Voltage Control — *IT.*/Freedom

Contactors

Table 15-1. Type 1 *IT.* Contactors

NEMA Size	Box No.	Shipping Weight Lbs. (kg)
Non-reversing Contactors without PSS		
00	1	3 (1.4)
0	1	3 (1.4)
1	1	3 (1.4)
2	2	5 (2.3)
3	2	10 (4.5)
4	2	10 (4.5)
5	3	32 (15)
Reversing Contactors without PSS		
00	1	4 (1.8)
0	1	4 (1.8)
1	1	6 (2.7)
2	2	5 (2.3)
3	3	20 (9.1)
4	3	20 (9.1)
5	3	52 (24)
Non-reversing Contactors with PSS		
00	2	4 (1.8)
0	2	4 (1.8)
1	2	4 (1.8)
2	2	6 (2.7)
3	3	12 (5.4)
4	3	12 (5.4)
5	3	33 (15)
Reversing Contactors with PSS		
00	2	5 (2.3)
0	2	5 (2.3)
1	2	5 (2.3)
2	3	10 (4.5)
3	3	21 (10)
4	3	22 (10)
5	3	54 (25)

Table 15-2. Type 1 Freedom Contactors

NEMA Size (Poles)	Box No.	Shipping Weight Lbs. (kg)
Non-reversing Contactors — without Control Power Transformers		
00 (2P, 3P, 4P)	1	5.25 (2.4)
00 (2P, 3P, 4P) with top adders	2	7.3 (3.3)
0 (2P, 3P, 4P)	1	5.25 (2.4)
0 (2P, 3P, 4P) with top adders	2	7.3 (3.3)
0 (5P)	2	7.3 (3.3)
1 (2P, 3P)	1	7.9 (3.6)
1 (2P, 3P) with top adders	3	11 (5.0)
1 (4P, 5P)	2	8.3 (3.8)
2 (2P, 3P, 4P 5P)	2	8.5 (3.9)
3 (2P, 3P)	4	35 (16)
4 (2P, 3P)	4	47 (21)
5	10	113 (51)
6	F1E	325 (148)
7	F1E	①
8	F1E	①
9	F1E	①
Non-reversing Contactors — with Control Power Transformers		
00 (2P, 3P, 4P)	2	12 (5.4)
00 (2P, 3P, 4P, 5P) with top adders	3	15 (6.8)
0 (2P, 3P, 4P, 5P)	2	12 (5.4)
0 (2P, 3P, 4P, 5P) with top adders	3	15 (6.8)
1 (2P, 3P)	2	12.2 (5.5)
1 (2P, 3P) with top adders	3	12.5 (5.7)
1 (4P, 5P)	2	12.6 (5.7)
2 (2P, 3P, 4P, 5P)	2	12.8 (5.8)
3 (2P, 3P)	4	40 (18)
4 (2P, 3P)	4	52 (24)
5	10	120 (54)
6	F1E	335 (152)
7	F1E	①
8	F1E	①
9	F1E	①
3-Pole Reversing Contactors — without Control Power Transformers		
00	2	7.8 (3.5)
0	2	8 (3.6)
1	3	11 (5.0)
2	3	12 (5.4)
3	4	67 (30)
4	4	154 (70)
5	10	170 (77)
6	F1E	425 (193)
7	F1E	①
8	F1E	①
9	F2E	①

① Consult factory.

Table 15-3. Type 3R, 4/4X, 12 *IT.* Contactors

NEMA Size	Box No.	Shipping Weight Lbs. (kg)
Non-reversing without PSS		
00, 0	5	12 (5.4)
1	5	12 (5.4)
2	5	14 (6.4)
3	8	32 (15)
4	8	41 (19)
5	10	99 (45)
Non-reversing with PSS		
00, 0	5	13 (5.9)
1	6	13 (5.9)
2	6	15 (6.8)
3	8	34 (15)
4	8	43 (20)
5	10	101 (46)
Reversing without PSS		
00, 0	6	14 (6.4)
1	6	14 (6.4)
2	6	17 (7.7)
3	8	40 (18)
4	9	48 (22)
5	10	125 (57)

Table 15-4. Type 3R, 4/4X, 12 Freedom Contactors

NEMA Size (Poles)	Box No.	Shipping Weight Lbs. (kg)
Non-reversing Contactors — without Control Power Transformers		
00	5	14 (6.4)
0 (2P, 3P, 4P)	5	14 (6.4)
1 (2P, 3P, 4P, 5P)	5	15 (6.8)
2 (2P, 3P, 4P, 5P)	5	15.5 (7.0)
3 (2P, 3P)	8	45 (20)
4 (2P, 3P)	8	56 (25)
5	10	140 (64)
6	F1E	385 (175)
7	F1E	②
8	F1E	②
9	F1E	②
Non-reversing Contactors — with Control Power Transformers		
00	5	18 (8.2)
0 (2P, 3P, 4P)	5	18 (8.2)
1 (2P, 3P, 4P, 5P)	6	19 (8.6)
2 (2P, 3P, 4P, 5P)	6	19.5 (8.9)
3 (2P, 3P)	8	52 (24)
4 (2P, 3P)	8	63 (29)
5	10	147 (67)
6	F1E	405 (184)
7	F1E	②
8	F1E	②
9	F1E	②

② Consult factory.

Note: All Type 7 and 9, see **Tab 11**.

Table 15-4. Type 3R, 4/4X, 12 Freedom Contactors (Continued)

NEMA Size (Poles)	Box No.	Shipping Weight Lbs. (kg)
3-Pole Reversing Contactors — with or without Control Power Transformers		
00	6	18 (8.2)
0	6	18 (8.2)
1	6	19 (8.6)
2	6	19 (8.6)
3	8	47 (21)
4	9	69 (31)
5	10	170 (77)
6	F1E	495 (225)
7	F1E	①
8	F1E	①
9	F2E	①

① Consult factory.

Non-combination Starters

Table 15-5. Type 1 *IT*. Non-combination Starters

NEMA Size	Box No.	Shipping Weight Lbs. (kg)
Non-reversing Non-combination Starters		
00	2	8 (3.6)
0	2	8 (3.6)
1	2	8 (3.6)
2	2	11 (5.0)
3	4	16 (7.3)
4	4	16 (7.3)
5	4	36 (16)
Reversing Non-combination Starters		
00	3	9 (4.1)
0	3	9 (4.1)
1	3	9 (4.1)
2	3	15 (6.8)
3	4	24 (11)
4	4	24 (11)
5	4	65 (30)

Table 15-6. Type 1 Freedom Non-combination Starters

NEMA Size	Box No.	Shipping Wt. Lbs. (kg)
Non-reversing Starters — without Control Power Transformers		
00	1	7 (3.2)
00 with top adders/SSOL	2	10 (4.5)
0	1	7.1 (3.2)
0 with top adders/SSOL	2	10 (4.5)
1	1	7.9 (3.6)
1 – 2 with top adders/SSOL	3	11.5 (5.2)
2	2	8.5 (3.9)
3	4	35 (16)
4	4	47 (21)
5	10	139 (63)
6	F1E	360 (163)
7	F1E	②
8	F1E	②
9	F1E	②
Non-reversing Starters — with Control Power Transformers		
00	3	15 (6.8)
0	3	15 (6.8)
1	3	16 (7.3)
2	3	16.2 (7.4)
3	4	42 (19)
4	4	54 (25)
5	10	146 (66)
6	F1E	385 (175)
7	F1E	②
8	F1E	②
9	F1E	②
Reversing Starters — without Control Power Transformers		
00	2	8 (3.6)
0	2	8 (3.6)
0 with top adders	3	11 (5)
1	3	13 (5.9)
1 with top adders	3	13.4 (6.1)
2	3	15 (6.8)
3	4	43 (20)
4	9	65 (30)
5	10	165 (75)
6	F1E	450 (204)
7	F1E	②
8	F2E	②
9	F2E	②
Reversing Starters — with Control Power Transformers		
00 with top adders	3	15 (6.8)
0	3	15 (6.8)
1 with top adders	3	17 (7.7)
2	3	19 (8.6)
3	4	50 (23)
4	9	72 (33)
5	10	172 (78)
6	F1E	495 (225)
7	F1E	②
8	F2E	②
9	F2E	②

② Consult factory.

Table 15-7. Type 3R, 4/4X, 12 *IT*. Non-combination Starters

NEMA Size	Box No.	Shipping Wt. Lbs. (kg)
Non-reversing Non-combination Starters		
00, 0	5	8 (3.6)
1	5	9 (4.1)
2	7	12 (5.4)
3	8	38 (17)
4	8	38 (17)
5	10	110 (50)
Reversing Non-combination Starters		
00, 0	3	10 (4.5)
1	3	11 (5.0)
2	3	18 (8.2)
3	4	32 (15)
4	4	32 (15)
5	4	92 (42)

Table 15-8. Type 3R, 4/4X, 12 Freedom Non-combination Starters

NEMA Size	Box No.	Shipping Wt. Lbs. (kg)
Non-reversing Starters — without Control Power Transformers		
0	5	14.3 (6.5)
1	5	15.3 (6.9)
2	6	16 (7.3)
3	8	46 (21)
4	8	60 (27)
5	10	150 (68)
6	F1E	415 (188)
7	F1E	③
8	F1E	③
9	F1E	③
Non-reversing Starters — with Control Power Transformers		
0	6	18 (8.2)
1	6	19 (8.6)
2	6	20 (9)
3	8	53 (24)
4	8	67 (30)
5	10	157 (71)
6	F1E	③
7	F1E	③
8	F1E	③
9	F1E	③
Reversing Starters — with or without Control Power Transformers		
0	7	18.5 (8.4)
1	7	19.5 (8.9)
2	7	21 (10)
3	8	48 (22)
4	9	72 (33)
5	10	175 (79)
6	F1E	525 (238)
7	F1E	③
8	F2E	③
9	F2E	③

③ Consult factory.

Note: All Type 7 and 9, see **Tab 11**.

Combination Starters — NEMA Size

Table 15-9. Type 1 *IT*. Combination Starters

NEMA Size	Box No.	Shipping Wt. Lbs. (kg)
Non-reversing Combination		
00, 0	A	35 (16)
1	A	35 (16)
2	A	36 (16)
3	C	60 (27)
4 (HMCP)	C	60 (27)
4 (Disconnect Switch)	E	120 (54)
5	E	140 (64)
Reversing Combination		
00, 0	B	36 (16)
1	B	36 (16)
2	B	37 (17)
3	C	68 (31)
4	E	68 (31)
5	F1E	167 (76)

Table 15-10. Type 1 Freedom and A200 Combination Starters

NEMA Size (Device)	Box No.	Shipping Wt. Lbs. (kg)
Non-reversing — with and without Control Power Transformers		
0	A	37 (17)
1	A	38 (17)
2	A	39 (18)
3	C	72 (33)
4 (HMCP)	C	90 (41)
4 (Disconnect Switch)	D	150 (68)
5	E	180 (82)
6	F1E	435 (197)
7	F2E	①
8	F2E	①
9	F2E	①
Reversing — with and without Control Power Transformers		
0	B	42 (19)
1	B	43 (20)
2	B	44 (20)
3	C	84 (38)
4	D	173 (79)
5	F1E	①
6	F1E	550 (250)
7	F2E	①
8	F2E	①
9	①	①
Non-reversing — Oversized		
0 – 1 – 2	B	44 (20)

① Consult factory.

Table 15-11. Type 1 Freedom Non-reversing Combination Starters — Narrow Enclosure

NEMA Size	Box No.	Shipping Wt. Lbs. (kg)
NEMA 1 Enclosed		
0 – 1 – 2	I	35 (16)
NEMA 12 Enclosed		
0 – 1 – 2	I	36 (16)
NEMA 12 Enclosed with Safety Door Interlock		
0 – 1 – 2	I	37 (17)

Table 15-12. Type 3R, 4/4X, 12 *IT*. Combination Starters

NEMA Size	Box No.	Shipping Wt. Lbs. (kg)
Non-reversing Combination		
00, 0	A	35 (16)
1	A	35 (16)
2	A	36 (16)
3	C	60 (27)
4 (HMCP)	C	60 (27)
4 (Disconnect Switch	E	120 (54)
5	E	140 (64)
Reversing Combination		
00, 0	B	36 (16)
1	B	36 (16)
2	B	37 (17)
3	C	68 (31)
4	E	68 (31)
5	F1E	167 (76)

Table 15-13. Type 3R, 4/4X, 12 Freedom Combination Starters

NEMA Size (Device)	Box No.	Shipping Wt. Lbs. (kg)
Non-reversing — with and without Control Power Transformers		
0	A	37 (17)
1	A	38 (17)
2	A	39 (18)
3	C	72 (33)
4 (HMCP)	C	90 (41)
4 (Disconnect Switch	D	150 (68)
5	E	180 (82)
6	F1E	435 (197)
7	F2E	②
8	F2E	②
9	F2E	②
Reversing — with and without Control Power Transformers		
0	B	42 (19)
1	B	43 (20)
2	B	44 (20)
3	C	84 (38)
4	D	173 (79)
5	E	550 (250)
6	F1E	②
7	F2E	②
8	F2E	②
9	②	②
Non-reversing — Oversized		
0 – 1 – 2	B	44 (20)

② Consult factory.

Multispeed Starters — Freedom

Table 15-14. Non-combination Multispeed Starters

Size	Type 1		Type 3R, 4X, 12	
	Box No.	Shipping Wt. Lbs. (kg)	Box No.	Shipping Wt. Lbs. (kg)
Class 33: 2-Speed 2-Winding				
0	2	8 (3.6)	6	18 (8.2)
1 – 2	3	11 (5.0)	7	18 (8.2)
3	4	67 (30)	8	75 (34)
4	9	154 (70)	9	170 (77)
5	E	170 (77)	E	190 (86)
6	F1E	335 (152)	F1E	375 (170)
Class 34: 2-Speed 1-Winding, Constant or Variable Torque				
0 – 2	3	19 (8.6)	7	28 (13)
3	9	50 (23)	9	58 (26)
4	E	270 (123)	E	278 (126)
5	F1E	360 (163)	F1E	370 (168)
6	F1E	③	F1E	③
Class 35: 2-Speed 1-Winding, Constant Horsepower				
0 – 2	3	19 (8.6)	7	28 (13)
3	9	50 (23)	9	58 (26)
4	E	270 (123)	E	278 (126)
5	F1E	360 (163)	F1E	370 (168)
6	F1E	③	F1E	③

③ Consult factory.

Note: All Type 7 and 9, see **Tab 11**.

Table 15-15. Combination Multispeed Starters

Size	Type 1		Type 3R, 4X, 12	
	Box No.	Shipping Wt. Lbs. (kg)	Box No.	Shipping Wt. Lbs. (kg)
Class 36: 2-Speed 2-Winding — with Disconnect Switch **Class 39: 2-Speed 2-Winding — with HMCP**				
0 – 2	B	15 (6.8)	B	22 (10)
3	C	82 (37)	C	90 (41)
4	D	174 (79)	D	190 (86)
5	F1E	190 (86)	F1E	210 (95)
6	F1E	355 (161)	F1E	375 (170)
Class 37: 2-Speed 1-Winding, Constant or Variable Torque — with Disconnect **Class 38: 2-Speed 1-Winding, Constant Horsepower — with Disconnect** **Class 40: 2-Speed 1-Winding, Constant or Variable Torque — with Disconnect** **Class 41: 2-Speed 1-Winding, Constant Horsepower — with HMCP**				
0 – 2	B	27 (12)	B	35 (16)
3	C	102 (46)	C	110 (50)
4	E	320 (145)	E	327 (148)
5	F1E	428 (194)	F1E	438 (199)
6	F1E	④	F1E	④

④ Consult factory.

IEC Control — *XT*

Note: Contact Eaton for Box Dimensions not shown in **Figures 15-1** to **15-72**.

Type 1, 3R, 4, 4X, 12 *XT* Non-combination Starters

Table 15-16. Class 09 — FVNR Starters (Non-combination)

IEC Size (Frame / Amps)	Box Number	Ship Weight in kg [Lb]
B – H / 7 – 25A B – H / 7 – 32A B – H / 7 – 32A	**1** **5A** **5P**	3.2 [7] 6.4 [14] 4.5 [10]
J – L / 40 – 65A J – L / 40 – 65A	**5A** **5P**	18.6 [41] 17.7 [39]
M – Q / 80 – 150A	**8**	15.9 [35]

Table 15-17. Class 10 — FVR Starters (Non-combination)

IEC Size (Frame / Amps)	Box Number	Ship Weight in kg [Lb]
B – H / 7 – 32A B – H / 7 – 32A B – H / 7 – 32A	**2** **5A** **5P**	5.9 [13] 6.8 [15] 5.0 [11]
J – L / 40 – 65A J – L / 40 – 65A J – L / 40 – 65A	**2** **6A** **6P**	18.2 [40] 24.5 [45] 19.1 [42]
M – Q / 80 – 125A M – Q / 80 – 150A	**4** **8**	22.7 [50] 18.6 [41]

Table 15-18. Class 11 — FVNR Starters (Non-combination with CPT)

IEC Size (Frame / Amps)	Box Number	Ship Weight in kg [Lb]
B – H / 7 – 32A B – H / 7 – 32A B – H / 7 – 32A	**2** **5A** **5P**	6.4 [14] 8.4 [19] 6.6 [15]
J – L / 40 – 65A J – L / 40 – 65A J – L / 40 – 65A	**2** **6A** **6P**	19.5 [43] 23.2 [51] 21.8 [48]
M – Q / 80 – 125A M – Q / 80 – 150A	**4** **8**	23.6 [52] 24.1 [53]

Type 1, 3R, 4, 4X, 12 *XT* Fusible/ Non-fusible Starters

Table 15-19. Class 19 — FVNR Combination with Disconnect Switch

IEC Size (Frame / Amps)	Box Number	Ship Weight in kg [Lb]
B – J / 7 – 40A B – J / 7 – 40A	**7A** **7P**	8.6 [19] 6.8 [15]
K – N / 50 – 105A K – N / 50 – 105A	**8** **8P**	24.1 [53] 22.2 [49]

Table 15-20. Class 19 — FVNR Combination with Disconnect Switch and Fuseblock

IEC Size (Frame / Amps)	Box Number	Ship Weight in kg [Lb]
B – J / 7 – 40A B – J / 7 – 40A	**7A** **7P**	13.6 [30] 11.8 [26]
K – M / 65 – 85A K – M / 65 – 85A	**8** **8P**	25 [55] 23.2 [51]

Table 15-21. Class 20 — FVR Combination with Disconnect Switch

IEC Size (Frame / Amps)	Box Number	Ship Weight in kg [Lb]
B – J / 7 – 40A B – J / 7 – 40A	**7A** **7P**	9.1 [20] 7.3 [16]
K – N / 50 – 105A K – N / 50 – 105A	**8** **8P**	26.3 [58] 25 [55]

Table 15-22. Class 20 — FVR Combination with Disconnect Switch and Fuseblock

IEC Size (Frame / Amps)	Box Number	Ship Weight in kg [Lb]
B – J / 7 – 40A B – J / 7 – 40A	**7A** **7P**	14.1 [31] 12.3 [27]
K – M / 65 – 85A K – M / 65 – 85A	**8** **8P**	25.4 [56] 23.6 [52]

Type 1, 3R, 4, 4X, 12 *XT* HMCP Combination Starters

Table 15-23. Class 25 — FVNR Combination with HMCP

IEC Size (Frame / Amps)	Box Number	Ship Weight in kg [Lb]
B – H / 7 – 32A B – H / 7 – 32A	**7A** **7P**	10 [23] 8.2 [18]
J – L / 40 – 65A J – L / 40 – 65A	**7A** **7P**	11 [24] 8.9 [20]
M – Q / 80 – 125A	**8**	31.8 [70]

Table 15-24. Class 26 — FVR Combination with HMCP

IEC Size (Frame / Amps)	Box Number	Ship Weight in kg [Lb]
B – H / 7 – 32A B – H / 7 – 32A	**7A** **7P**	12 [26] 10 [22]
J – L / 40 – 65A J – L / 40 – 65A	**7A** **7P**	13 [29] 11 [25]
M – P / 80 – 115A	**8**	31.8 [70]

Type 1, 3R, 4, 4X, 12 *XT* Combination Motor Controllers (CMCs)

Table 15-25. Class 76 — Self Protected Starter (CMC)

IEC Size (Frame/Amps)	Box Number	Ship Weight kg [lbs]
B – H/up to 32A	K	6.8 [15]
B – H/up to 32A	5P	5.4 [12]

Table 15-26. Class 77 — Self Protected Starter (CMC) with CPT

IEC Size (Frame/Amps)	Box Number	Ship Weight kg [lbs]
B – H/up to 32A	K	9.5 [21]
B – H/up to 32A	6P	7.0 [17]

Table 15-27. Class 78 — Reversing Self Protected Starter (CMC)

IEC Size (Frame/Amps)	Box Number	Ship Weight kg [lbs]
B – H/7 – 32A	K	7.0 [16]
B – H/7 – 32A	5P	5.2 [12]

Lighting Contactors

Non-combination

Table 15-28. Type 1 Non-combination Lighting Contactors — Electrically Held — CN35

Ampere Size (Poles)	Box No.	Shipping Wt. Lbs. (kg)
Non-reversing Contactors — without Control Power Transformers		
10A (2P, 3P, 4P)	1	5 (2.3)
10A (2P, 3P, 4P, 5P, 6P) w/top adders	2	7.3 (3.3)
10A (9P, 10P, 12P, 20P)	3	9.5 (4.3)
20A (2P, 3P)	1	5.2 (2.4)
20A (2P, 3P, 4P, 5P, 6P) w/top adders & 6P w/o top adder	2	7.3 (3.3)
20A (9P, 10P, 12P, 20P)	3	9 (4.1)
20A (9P, 12P) w/top adders	3	9.3 (4.2)
30A (2P, 3P)	1	5.3 (2.4)
30A (2P, 3P, 4P) w/top adders	2	7.3 (3.3)
30A (5P, 6P)	3	9.0 (4.1)
30A (5P, 6P) w/top adders	3	9.2 (4.2)
30A (9P, 10P, 12P, 20P)	3	9.5 (4.3)
30A (9P, 12P) w/top adders	3	9.7 (4.4)
60A (2P, 3P)	1	7 (3.2)
60A (2P, 3P) w/top adders	3	9.8 (4.4)
60A (4P, 5P, 6P, 9P, 10P, 12P)	3	9.5 (4.3)
60A (4P, 5P) w/top adders	3	10 (4.5)
100A (2P, 3P)	4	35 (16)
100A (4P, 5P, 6P, 9P)	4	60 (27)
200A (2P, 3P)	4	70 (32)
200A (4P, 5P, 6P)	10	133 (60)
300A (2P, 3P)	10	113 (51)
300A (4P, 5P, 6P)	10	136 (62)
400A (2P, 3P)	10	125 (57)

Table 15-28. Type 1 Non-combination Lighting Contactors — Electrically Held — CN35 (Continued)

Ampere Size (Poles)	Box No.	Shipping Wt. Lbs. (kg)
Non-reversing Contactors — with Control Power Transformers		
10A (2P, 3P, 4P)	2	11 (5.0)
10A (2P, 3P, 4P, 5P, 6P, 9P, 10P, 12P, 20P) w/top adders	3	13.1 (5.9)
20A (2P, 3P, 4P, 6P)	2	11 (5.0)
20A (2P, 3P, 4P, 5P, 6P) w/ top adders	3	13.1 (5.9)
20A (9P, 10P, 12P, 20P)	3	13.5 (6.1)
20A (9P, 12P) w/top adders	3	13.5 (6.1)
30A (2P, 3P, 4P)	2	12 (5.4)
30A (2P, 3P, 4P) w/top adders	3	13.1 (5.9)
30A (5P, 6P)	2	12.5 (5.7)
30A (5P, 6P) w/top adders	3	13.5 (6.1)
30A (9P, 10P, 12P, 20P)	3	13.9 (6.3)
30A (9P, 12P) w/top adders	3	14.1 (6.4)
60A (2P, 3P)	2	12.8 (5.8)
60A (2P, 3P) w/top adders	3	14 (6.4)
60A (4P, 5P, 6P, 9P, 10P, 12P)	3	14 (6.4)
60A (4P, 5P) w/top adders	3	14.2 (6.4)
100A (2P, 3P)	4	39 (18)
100A (4P, 5P, 6P, 9P)	4	67 (30)
200A (2P, 3P)	10	117 (53)
200A (4P, 5P, 6P)	10	140 (64)
300A (2P, 3P)	10	120 (54)
300A (4P, 5P, 6P)	10	143 (65)
400A (2P, 3P)	10	132 (60)

Table 15-29. Type 1 Non-combination Lighting Contactors — Magnetically Latched — A202

Ampere Size (Poles)	Box No.	Shipping Wt. Lbs. (kg)
Non-reversing Contactors— without Control Power Transformers		
30A (2P, 3P, 4P, 5P)	2	8.5 (3.9)
30A (6P, 8P, 10P, 12P)	3	13 (5.9)
30A (20P)	4	35 (16)
60A (2P, 3P, 4P, 5P)	2	8.7 (3.9)
60A (6P, 8P, 10P, 12P)	3	13.5 (6.1)
60A (20P)	4	40 (18)
100A (2P, 3P, 4P, 5P)	4	40 (18)
100A (6P, 8P, 10P, 12P)	9	85 (39)
100A (20P)	9	100 (45)
200A (2P, 3P, 4P, 5P)	4	46 (21)
200A (6P, 8P, 10P, 12P)	9	95 (43)
200A (20P)	9	110 (50)
300A (2P, 3P)	10	115 (52)
400A (2P, 3P)	10	125 (57)

Table 15-29. Type 1 Non-combination Lighting Contactors — Magnetically Latched — A202 (Continued)

Ampere Size (Poles)	Box No.	Shipping Wt. Lbs. (kg)
Non-reversing Contactors — with Control Power Transformers		
30A (2P, 3P, 4P, 5P)	2	12.5 (5.7)
30A (6P, 8P, 10P, 12P)	3	17 (7.7)
30A (20P)	4	39 (18)
60A (2P, 3P, 4P, 5P)	2	12.7 (5.8)
60A (6P, 8P, 10P)	3	17.5 (7.9)
60A (12P)	9	87 (39)
60A (20P)	4	44 (20)
100A (2P, 3P, 4P, 5P)	4	47 (21)
100A (6P, 8P, 10P, 12P)	9	92 (42)
100A (20P)	9	107 (49)
200A (2P, 3P, 4P, 5P)	4	53 (24)
200A (6P, 8P, 10P, 12P)	9	102 (46)
200A (20P)	9	117 (53)
300A (2P, 3P)	10	122 (55)
400A (2P, 3P)	10	132 (60)

Table 15-30. Type 1 Non-combination Lighting Contactors — C30CN ①

Ampere Size (Poles)	Box No.	Shipping Wt. Lbs. (kg)
Lighting Contactors — without Control Power Transformers		
30A (2 – 12)	2	9 (4.1)
Lighting Contactors — with Control Power Transformers		
30A (2 – 12)	3	13.5 (5.9)

① Consult factory for combination enclosures.

Table 15-31. Type 3R, 4X and 12 Non-combination Lighting Contactors — C30CN ②

Ampere Size (Poles)	Box No.	Shipping Wt. Lbs. (kg)
Lighting Contactors — without Control Power Transformers		
30A (2 – 12)	6	14 (6.4)
Lighting Contactors — with Control Power Transformers		
30A (2 – 12)	7	20 (9.1)

② Consult factory for combination enclosures.

Note: All Type 7 and 9, see **Tab 11**.

Table 15-32. Type 3R, 4/4X, 12 Non-combination Lighting Contactors — Electrically Held — CN35

Ampere Size (Poles)	Box No.	Shipping Wt. Lbs. (kg)
Non-reversing Contactors — without Control Power Transformers		
10A (2P, 3P, 4P, 5P, 6P)	5	12 (5.4)
10A (9P, 10P, 12P, 20P)	7	20 (9.1)
20A (2P, 3P, 4P, 5P)	5	12 (5.4)
20A (6P)	5	14 (6.4)
20A (9P, 10P, 12P, 20P)	7	20 (9.1)
30A (2P, 3P, 4P)	5	13 (5.9)
30A (5P, 6P)	6	14 (6.4)
30A (9P, 10P, 12P, 20P)	7	20 (9.1)
60A (2P, 3P, 4P)	5	13 (5.9)
60A (5P, 6P)	6	16 (7.3)
60A (9P, 10P, 12P)	7	22 (10)
100A (2P, 3P)	8	49 (22)
100A (4P, 5P, 6P, 9P)	8	57 (26)
200A (2P, 3P)	8	110 (50)
300A (2P, 3P)	10	113 (51)
400A (2P, 3P)	10	125 57)
Non-reversing Contactors — with Control Power Transformers		
10A (2P, 3P, 4P, 5P, 6P)	5	16 (7.3)
10A (9P, 10P, 12P, 20P)	7	20 (9)
20A (2P, 3P, 4P, 5P)	5	16 (7.3)
20A (6P, 9P, 10P, 12P, 20P)	7	24 (11)
30A (2P, 3P, 4P)	6	18 (8.2)
30A (5P, 6P)	6	18 (8.2)
30A (9P, 10P, 12P, 20P)	7	24 (11)
60A (2P, 3P)	6	21 (10)
60A (4P, 5P, 6P)	6	23 (10)
60A (9P, 10P, 12P)	7	22 (10)
100A (2P, 3P)	8	56 (25)
100A (4P, 5P, 6P, 9P)	8	64 (29)
200A (2P, 3P)	8	117 (53)
300A (2P, 3P)	10	120 (54)
400A (2P, 3P)	10	132 (60)

Table 15-33. Type 3R, 4/4X, 12 Non-combination Lighting Contactors — Magnetically Latched — A202

Ampere Size (Poles)	Box No.	Shipping Wt. Lbs. (kg)
Non-reversing Contactors — without Control Power Transformers		
30A (2P, 3P, 4P, 5P)	5	13 (5.9)
30A (6P, 8P, 10P, 12P)	7	21 (10)
30A (20P)	8	46 (21)
60A (2P, 3P, 4P, 5P)	5	14 (6.4)
60A (6P, 8P, 10P, 12P)	7	22 (10)
60A (20P)	8	48 (22)
100A (2P, 3P, 4P, 5P)	8	50 (23)
100A (6P, 8P, 10P,12P)	9	58 (26)
100A (20P)	10	100 (45)
200A (2P, 3P, 4P, 5P)	8	52 (24)
200A (20P)	10	105 (48)
300A (2P, 3P)	10	113 (51)
400A (2P, 3P)	10	125 (57)
Non-reversing Contactors — with Control Power Transformers		
30A (2P, 3P)	6	15 (6.8)
30A (4P, 5P, 6P, 8P, 10P, 12P)	7	28 (13)
30A (20P)	8	54 (25)
60A (2P, 3P)	6	16 (7.3)
60A (4P, 5P, 6P, 8P, 10P, 12P)	7	29 (13)
60A (20P)	8	55 (25)
100A (2P, 3P, 4P, 5P)	8	57 (26)
100A (6P, 8P, 10P, 12P)	9	65 (30)
100A (20P)	10	112 (51)
200A (2P, 3P, 4P, 5P)	8	59 (27)
300A (2P, 3P)	10	120 (54)
400A (2P, 3P)	10	132 (60)

Combination

Table 15-34. Type 1 Combination Lighting Contactors

Ampere Size	Box No.	Shipping Wt. Lbs. (kg)
Electrically Held — Non-reversing (3P Only) — with or without Control Power Transformers		
30A	A	35 (16)
60A	A	36 (16)
100A	C	65 (30)
200A with Disconnect Switch	D	110 (50)
200A with Thermal Magnetic Breaker	E	150 (68)
300A	E	160 (73)
400A	E	170 (77)
Magnetically Latched — Non-reversing (3P Only) — with or without Control Power Transformers		
30A	A	35 (16)
60A	A	36 (16)
100A	C	65 (30)
200A with Disconnect Switch	D	110 (50)
200A with Thermal Magnetic Breaker	E	150 (68)
300A	E	140 (64)
400A	E	190 (86)

Table 15-35. Type 3R, 4/4X, 12 Combination Lighting Contactors

Ampere Size (Device)	Box No.	Shipping Wt. Lbs. (kg)
Electrically Held — Non-reversing (3P only) — with or without Control Power Transformers		
30A	A	35 (16)
60A	A	36 (16)
100A	C	65 (30)
200A with Disconnect Switch	D	110 (50)
200A with Thermal Magnetic Breaker	E	150 (68)
300A	E	160 (73)
400A	E	170 (77)
Magnetically Latched — Non-reversing (3P Only) — with or without Control Power Transformers		
30A	A	35 (16)
60A	A	36 (16)
100A	C	65 (30)
200A with Disconnect Switch	D	110 (50)
200A with Thermal Magnetic Breaker	E	150 (68)
300A with Disconnect Switch	72"	375 (170)
300A with Thermal Magnetic Breaker	E	160 (73)
400A with Disconnect Switch	72"	425 (193)
400A with Thermal Magnetic Breaker	E	210 (95)

Solid-State Reduced Voltage Starters

Table 15-36. Non-combination Solid-State Reduced Voltage

Rating	SSRV	Non-combination
		Box No. ①
.8 – 27A	S752	6A ②
37A	S801/S811	7A
50A	S752	6A ②
66A	S801/S811	7A
105A	S801/S811	7A
135A	S801/S811	B1
180A	S801/S811	C
240A	S801/S811	③
304A	S801/S811	③
360A	S801/S811	③
420A	S801/S811	10
500A	S801/S811	10
650A	S801/S811	10
720A	S801/S811	10
850A	S801/S811	10
1000A	S801/S811	10

① Enclosure space will also accommodate for an *IT*. Power Supply, two 4-pole relays, CPT, and terminal blocks. Also includes space for a DNA module or MOV.
② Same as footnote ①, but CPT is not included. Upsize to 7A enclosure to include space for a CPT and a full voltage bypass contactor.
③ Contact Eaton for Box Dimensions not shown in **Figures 15-1** to **15-72**.

Note: All Type 7 and 9, see **Tab 11**.

Table 15-37. Combination Solid-State Reduced Voltage

Rating	SSRV	Comb. with Fuses	Comb. with HMCP
		Box No. ④	Box No. ④
.8 – 27A	S752	B1 ⑤	A1 ⑥
37A	S801/S811	B1	A1 ⑥
50A	S752	C	A1 ⑥
66A	S801/S811	C	A1
105A	S801/S811	D	B1
135A	S801/S811	D	C
180A	S801/S811	E	E
240A	S801/S811	F1E	E
304A	S801/S811	F1E	E
360A	S801/S811	F1E	E
420A	S801/S811	F1E	E
500A	S801/S811	F1E	E
650A	S801/S811	F1E	F1E
720A	S801/S811	F1E	F1E
850A	S801/S811	F1E	F1E
1000A	S801/S811	F1E	F1E

④ Enclosure space will also accommodate for an *IT*. Power Supply, two 4-pole relays, CPT, and terminal blocks. Also includes space for a DNA module or MOV.
⑤ Enclosure may be reduced to an A1, with all space for all items as in footnote ④, excluding relays and CPTs.
⑥ Same as footnote ④, but CPT is not included. Upsize to B1 enclosure to include space for a CPT and a full voltage bypass contactor.

Reduced Voltage Starters — Freedom

Table 15-38. Type 1, 3R, 4/4X, 12 Freedom Reduced Voltage Enclosures

Size	Type 1		Type 3R, 4X, 12	
	Box No.	Shipping Wt. Lbs. (kg)	Box No.	Shipping Wt. Lbs. (kg)
Class 42: Autotransformer — Non-combination **Class 43: Autotransformer — with Disconnect** **Class 44: Autotransformer — with HMCP**				
2 – 4	E2	124 (56)	E2	149 (68)
5	F1E	885 (402)	F1E	1010 (459)
6 ①	F1E	1220 (554)	F1E	1345 (611)
6 ②	F2E	1400 (636)	F2E	1525 (692)
7	F2E	③	F2E	③
8	F2E	③	F2E	③
9	③	③	③	③
Class 45: Part Winding — Non-combination				
2PW	3	25 (11)	7	75 (34)
3PW – 4PW	9	47 (21)	9	95 (43)
5PW	E	125 (47)	E	180 (82)
6PW	F1E	780 (354)	F1E	880 (400)
7PW	F2E	③	F2E	③
8PW	F2E	③	F2E	③
Class 46: Part Winding — with Disconnect **Class 47: Part Winding — with Thermal Magnetic Trip Circuit Breaker**				
2PW	C	68 (31)	C	88 (40)
3PW	D	162 (74)	D	190 (86)
4PW	E	230 (104)	E	270 (123)
5PW	F1E	440 (200)	F1E	530 (241)
6PW ①	F1E	440 (200)	F1E	620 (281)
6PW ②	F2E	515 (234)	F2E	③
7PW	F2E	③	F2E	③
8PW	F2E	③	F2E	③
Classes 48 & 51: Wye Delta — Non-combination **Classes 49 & 52: Wye Delta — with Disconnect** **Classes 50 & 53: Wye Delta — with Thermal Magnetic Trip Circuit Breaker**				
2YD – 4YD	E	185 (84)	E	225 (102)
5YD	F1E	605 (275)	F1E	705 (320)
6YD ①	F1E	635 (288)	F1E	735 (334)
6YD ②	F2E	715 (325)	F2E	830 (377)
7YD	F2E	③	F2E	③
8YD	F2E	③	F2E	③

① Non-combination and breaker.
② Fusible.
③ Consult factory.

Adjustable Frequency Drives

Table 15-39. Type 1/3R MVX Combination and Non-combination

MVX hp	Box No.	Shipping Wt. Lbs. (kg) ④
1/2 – 2 (240V)	L	25 (11)
1 – 3 (480V, 575V)	L	27 (12)
3 – 5 (240V)	B1	31 (14)
5 (480V, 575V)	B1	31 (14)
7-1/2 (240V)	C	42 (19)
7-1/2 – 10 (480V, 575V)	C	42 (19)

④ Weights are for combination units.

Table 15-40. Type 1/3R MVX Combination and Non-combination with Bypass

MVX hp	Box No.	Shipping Wt. Lbs. (kg) ⑤
1/2 – 2 (240V)	M	28 (13)
1 – 3 (480V, 575V)	M	30 (14)
3 – 5 (240V)	B1	35 (16)
5 (480V, 575V)	B1	35 (16)
7-1/2 (240V)	C	55 (25)
7-1/2 – 10 (480V, 575V)	C	57 (26)

⑤ Weights are for combination units.

Table 15-41. Type 12/4/4X MVX Combination and Non-combination

MVX hp	Box No.	Shipping Wt. Lbs. (kg) ⑥
1/2 – 1 (240V)	L	29 (13)
1 – 2 (480V, 575V)	L	29 (13)
2 (240V)	M	32 (15)
3 (480V, 575V)	M	32 (15)
3 (240V)	B1	35 (16)
5 (480V, 575V)	B1	35 (16)
5 (240V)	C	48 (22)
7-1/2 (480V, 575V)	C	48 (22)
7-1/2 (240V)	D	55 (25)
10 (480V, 575V)	D	55 (25)

⑥ Weights are for combination units.

Table 15-42. Type 12/4/4X MVX Combination and Non-combination with Bypass

MVX hp	Box No.	Shipping Wt. Lbs. (kg) ⑦
1/2 – 2 (240V)	M	35 (16)
1 – 3 (480V, 575V)	M	37 (17)
3 – 5 (240V)	C	42 (19)
5 – 7-1/2 (480V, 575V)	C	44 (20)
7-1/2 (240V)	D	60 (27)
10 (480V, 575V)	D	65 (30)

⑦ Weights are for combination units.

Note: All Type 7 and 9, see **Tab 11**.

Pump Panels

Table 15-43. *IT*. Type 3R — Pump Panels

NEMA Size	Box No.	Shipping Wt. Lbs. (kg)
1 Narrow 2 Narrow	P1	31 (14)
1 2 3	P3	71 (32)
4	P5	80 (36)
5	P7	110 (50)

Table 15-44. Freedom Type 3R — Pump Panels

NEMA Size	Box No.	Shipping Wt. Lbs. (kg)
1 Narrow 2 Narrow	P1	35 (16)
1 2 3	P3	75 (34)
4	P5	120 (54)
5	P7	150 (68)
6	F1E	350 (159)
7	F2E	425 (193)

Table 15-45. Irrigation Pump Panels — Top Entry

Size	HMCPE/ BKR	C362	Fused C362
	Box No.	Box No.	Box No.
1	8	8	8
2	8	8	8
2-1/2	8	8	8
3	8	8	9
3-1/2	8	8	9
4	9	—	—
SSOL Option			
1	8	8	8
2	8	8	8
2-1/2	8	8	8
3	8 ⑧	8 ⑧	9
3-1/2	8 ⑧	8 ⑧	9
4	9	—	—

⑧ Irrigation pump panels with a Generation 2 solid-state overload are sized in a Box 8. Those with the Generation 1 overload are sized in a Box 9.

Table 15-46. Irrigation Pump Panels — Bottom Entry

Size	HMCPE/ BKR	C362	Fused C362
	Box No.	Box No.	Box No.
1	8	8	8
2	8	8	8
2-1/2	8	8	8
3	8	8	9
3-1/2	8	8	9
4	9	—	—
SSOL Option			
1	8	8	8
2	8	8	8
2-1/2	8	8	8
3	8 ①	8 ①	9
3-1/2	8 ①	8 ①	9
4	9	—	—

① Irrigation pump panels with a Generation 2 solid-state overload are sized in a Box 8. Those with the Generation 1 overload are sized in a Box 9.

Duplex Pump Panels

Table 15-47. Type 1, 3R, 4X, 12 Duplex Pump Panels Non-combination

NEMA Size	Box No.	Shipping Wt. Lbs. (kg)
0 – 2	G	44 (20)
3 – 4	G1	120 (54)
5 – 6	F1E	405 (184)

Table 15-48. Type 1, 3R, 4X, 12 Duplex Pump Panels Combination

NEMA Size	Box No.	Shipping Wt. Lbs. (kg)
0 – 2	H	75 (34)
3 – 4	H1 ②	180 (82)
5 – 6	F1E	425 (193)

② Contact Eaton for Box Dimensions not shown in **Figures 15-1** to **15-72**.

HVAC Control

Table 15-49. Type 1 HVAC Starters

NEMA Size	Box No.
0 – 2	7

Vacuum Break

Non-combination

Table 15-50. Type 1 Enclosed — Non-combination Vacuum Contactors and Starters

NEMA Size	Box No.	Shipping Wt. Lbs. (kg)
Non-reversing Contactors and Starters — with or without Control Power Transformers		
4	4	47 (21)
5	10	135 (61)
6	E	235 (107)
Reversing Contactors — with or without Control Power Transformers		
4	9	54 (25)
5	10	145 (66)
6	E	245 (111)

Table 15-51. Type 3R, 4/4X, 12 Enclosed — Non-combination Vacuum Contactors and Starters

NEMA Size	Box No.	Shipping Wt. Lbs. (kg)
Non-reversing Contactors and Starters — with or without Control Power Transformers		
4	8	67 (30)
5	10	150 (68)
6	E	250 (114)
Reversing Contactors — with or without Control Power Transformers		
4	9	72 (33)
5	10	175 (79)
6	E	275 (125)

Combination

Table 15-52. Type 1 Enclosed — Combination Vacuum Starters

NEMA Size	Box No.	Shipping Wt. Lbs. (kg)
Non-reversing Starters: Fusible or Non-fusible Disconnect — with or without Control Power Transformers		
4	D	150 (68)
5	E	180 (82)
6	F1E	280 (127)
Non-reversing Starters: HMCP or Circuit Breaker — with or without Control Power Transformers		
4	C	90 (41)
5	E	180 (82)
6	F1E	280 (127)

Table 15-53. Type 3R, 4/4X, 12 Enclosed — Combination Vacuum Starters

NEMA Size	Box No.	Shipping Wt. Lbs. (kg)
Non-reversing Starters: Fusible or Non-fusible Disconnect — with or without Control Power Transformers		
4	D	150 (68)
5	E	180 (82)
6	F1E	280 (127)
Non-reversing Starters: HMCP or Circuit Breaker — with or without Control Power Transformers		
4	C	90 (41)
5	E	180 (82)
6	F1E	280 (127)

Note: All Type 7 and 9, see **Tab 11**.

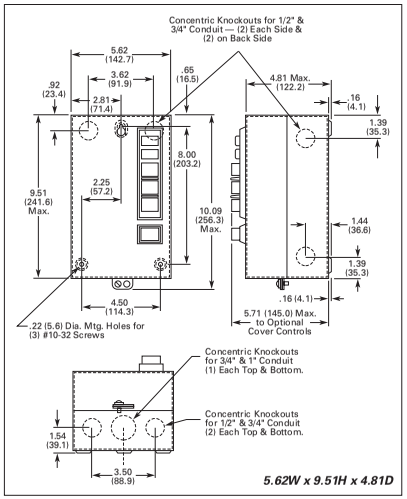

Figure 15-1. Box 1, Type 1 — Approximate Dimensions in Inches (mm)

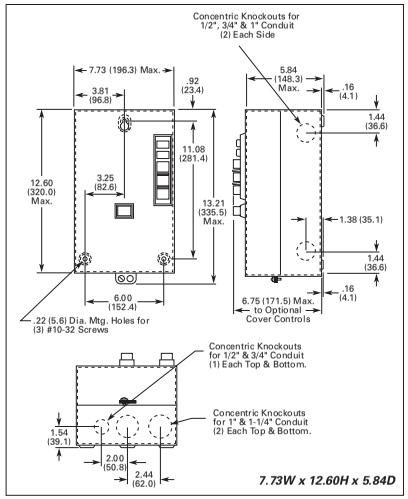

Figure 15-3. Box 2, Type 1 — Approximate Dimensions in Inches (mm)

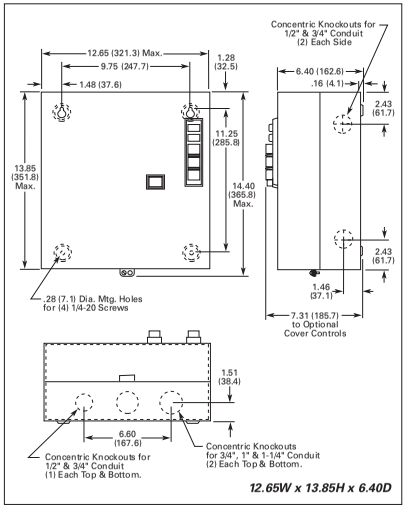

Figure 15-2. Box 3, Type 1 — Approximate Dimensions in Inches (mm)

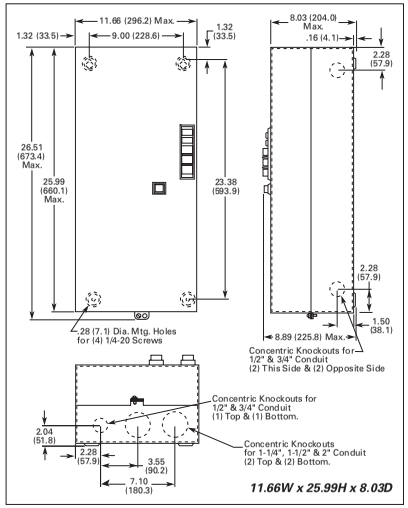

Figure 15-4. Box 4, Type 1 — Approximate Dimensions in Inches (mm)

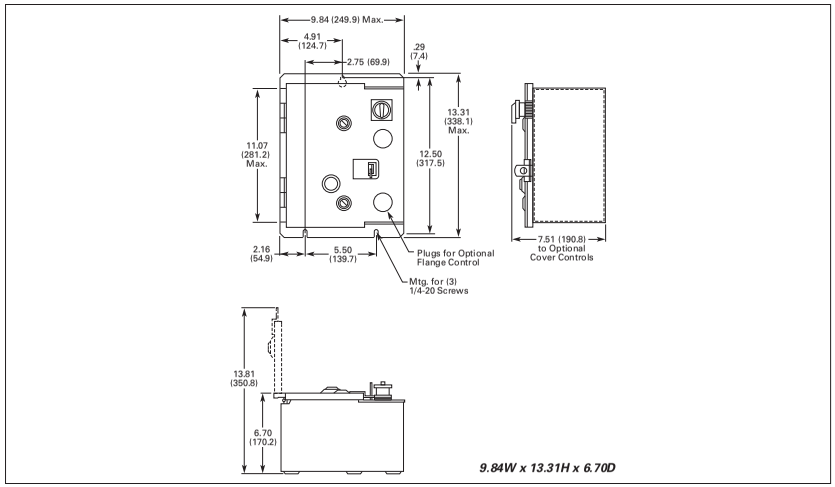

Figure 15-5. Box 5, Type 12 — Approximate Dimensions in Inches (mm)

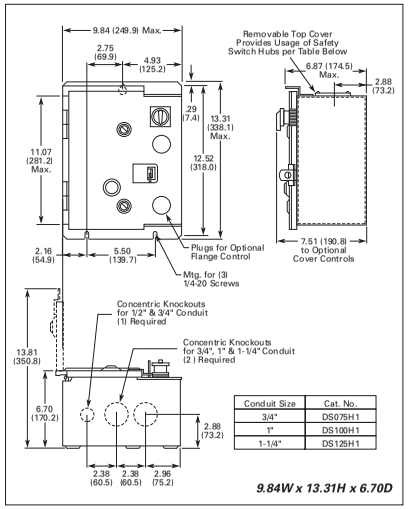

Conduit Size	Cat. No.
3/4"	DS075H1
1"	DS100H1
1-1/4"	DS125H1

Figure 15-6. Box 5, Type 3R — Approximate Dimensions in Inches (mm)

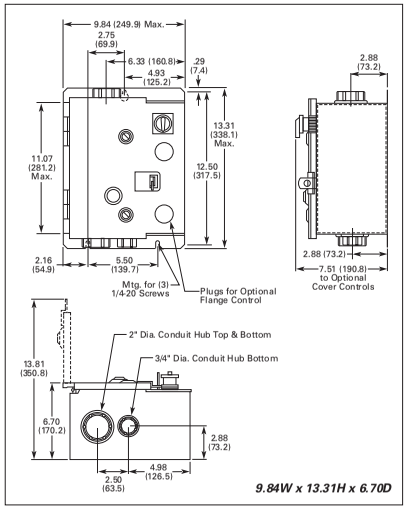

Figure 15-7. Box 5, Type 4X — Approximate Dimensions in Inches (mm)

15

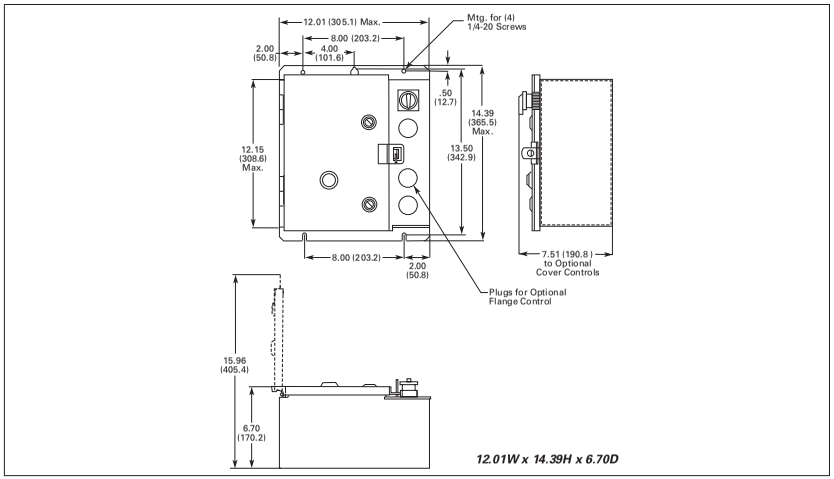

Figure 15-8. Box 6, Type 12 — Approximate Dimensions in Inches (mm)

15

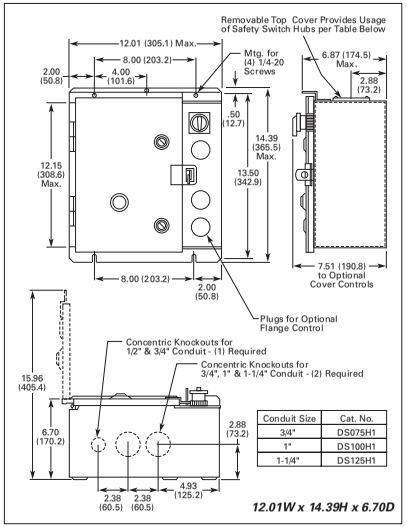

Conduit Size	Cat. No.
3/4"	DS075H1
1"	DS100H1
1-1/4"	DS125H1

Figure 15-9. Box 6, Type 3R — Approximate Dimensions in Inches (mm)

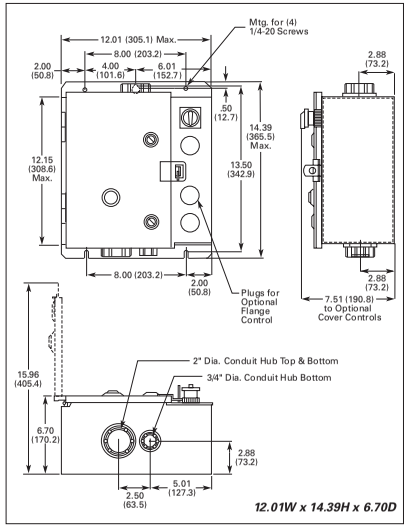

Figure 15-10. Box 6, Type 4X — Approximate Dimensions in Inches (mm)

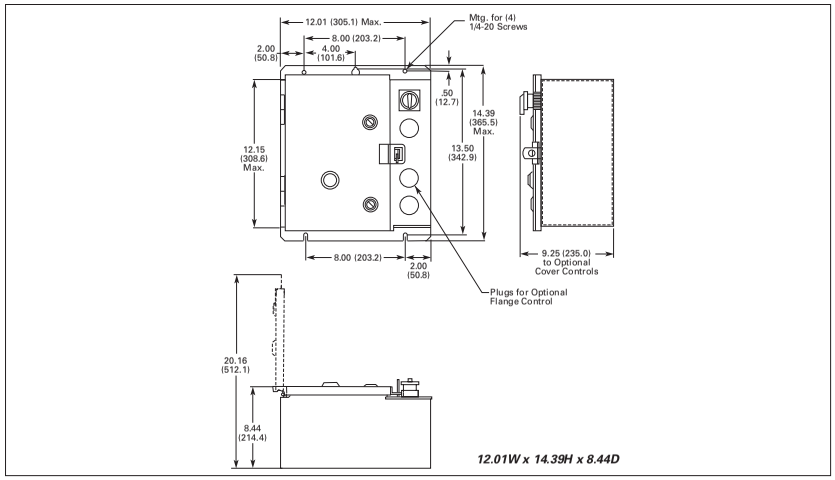

Figure 15-11. Box 6A, Type 12 — Approximate Dimensions in Inches (mm)

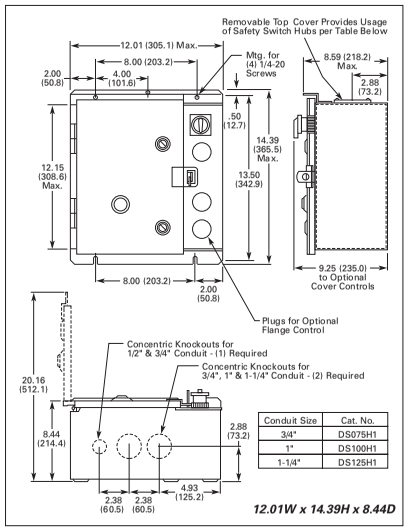

Conduit Size	Cat. No.
3/4"	DS075H1
1"	DS100H1
1-1/4"	DS125H1

Figure 15-12. Box 6A, Type 3R — Approximate Dimensions in Inches (mm)

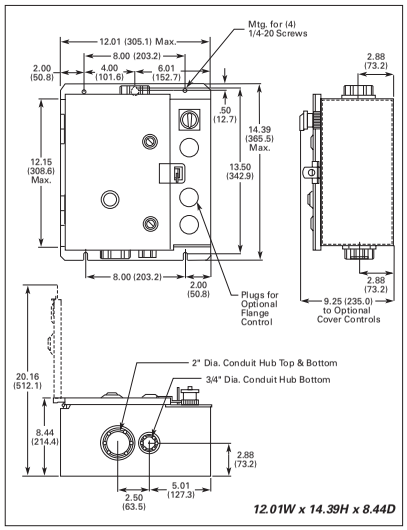

Figure 15-13. Box 6A, Type 4X — Approximate Dimensions in Inches (mm)

15

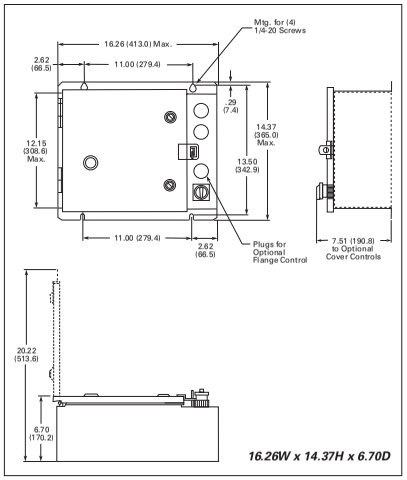

Figure 15-14. Box 7, Type 1 — Approximate Dimensions in Inches (mm)

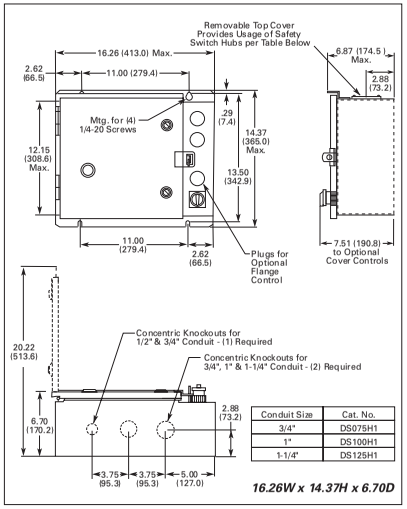

Conduit Size	Cat. No.
3/4"	DS075H1
1"	DS100H1
1-1/4"	DS125H1

Figure 15-15. Box 7, Type 3R — Approximate Dimensions in Inches (mm)

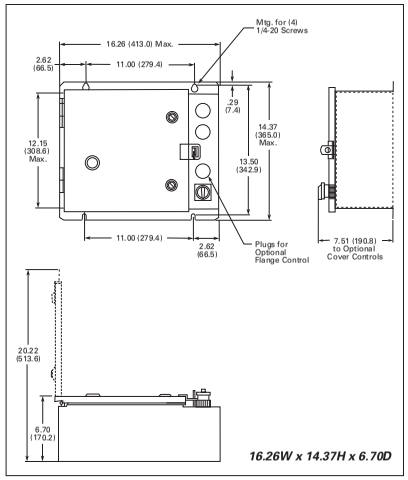

Figure 15-16. Box 7, Type 12 — Approximate Dimensions in Inches (mm)

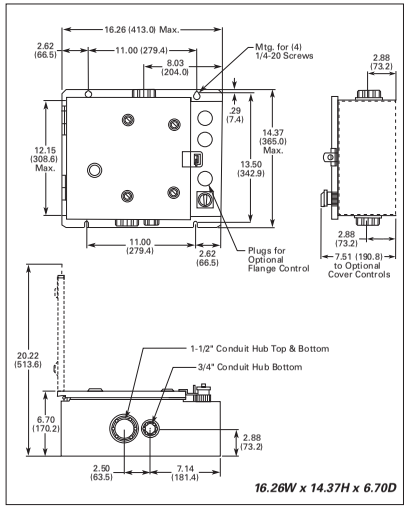

Figure 15-17. Box 7, Type 4X — Approximate Dimensions in Inches (mm)

15

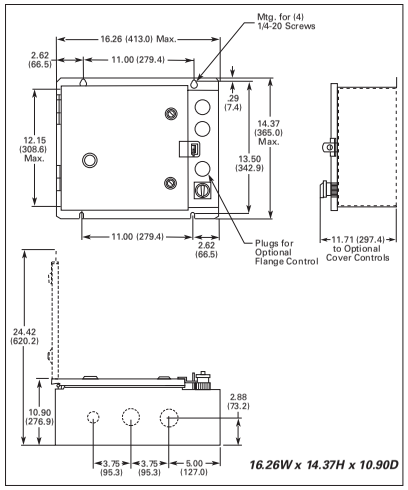

Figure 15-18. Box 7A, Type 1 — Approximate Dimensions in Inches (mm)

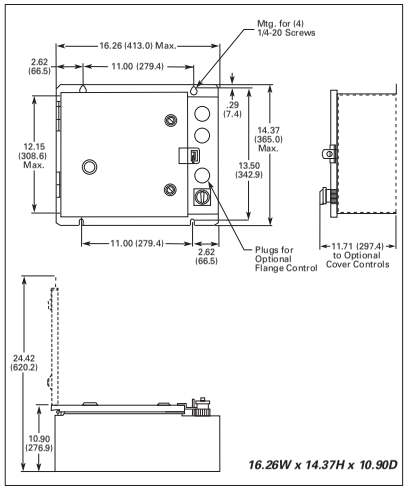

Figure 15-20. Box 7A, Type 12 — Approximate Dimensions in Inches (mm)

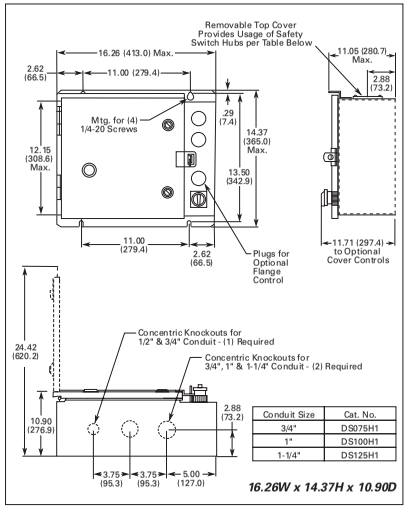

Conduit Size	Cat. No.
3/4"	DS075H1
1"	DS100H1
1-1/4"	DS125H1

Figure 15-19. Box 7A, Type 3R — Approximate Dimensions in Inches (mm)

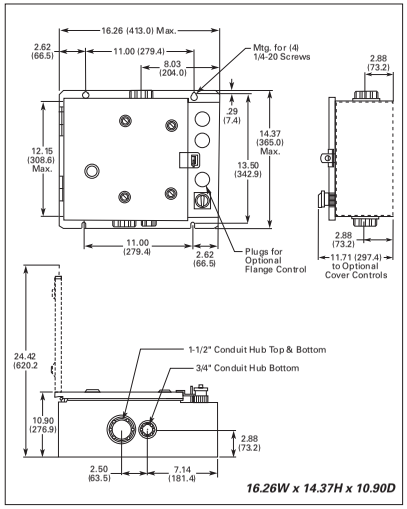

Figure 15-21. Box 7A, Type 4X — Approximate Dimensions in Inches (mm)

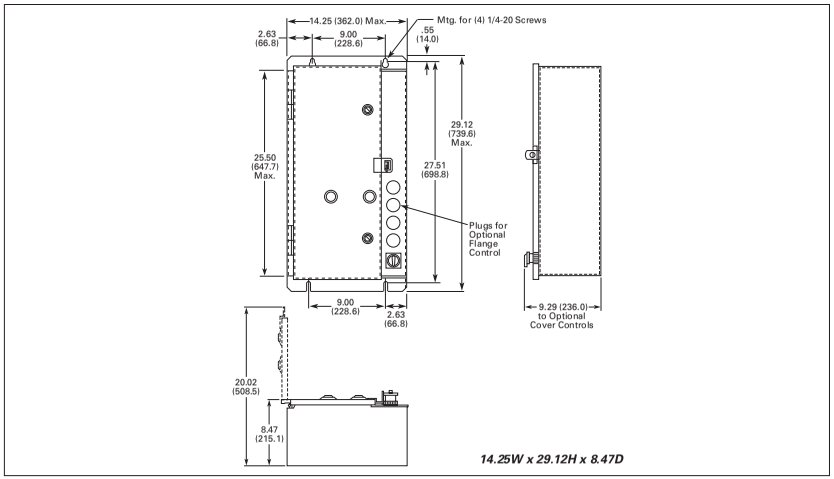

Figure 15-22. Box 8, Type 12 — Approximate Dimensions in Inches (mm)

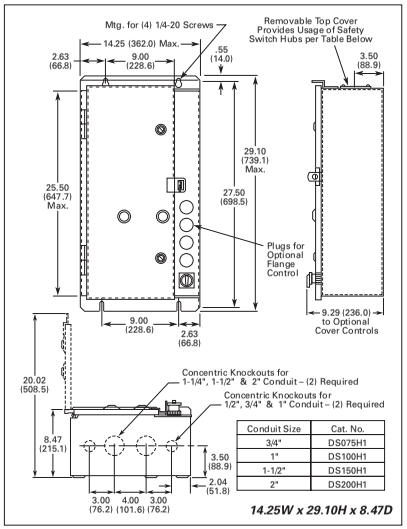

Conduit Size	Cat. No.
3/4"	DS075H1
1"	DS100H1
1-1/2"	DS150H1
2"	DS200H1

Figure 15-23. Box 8, Type 3R — Approximate Dimensions in Inches (mm)

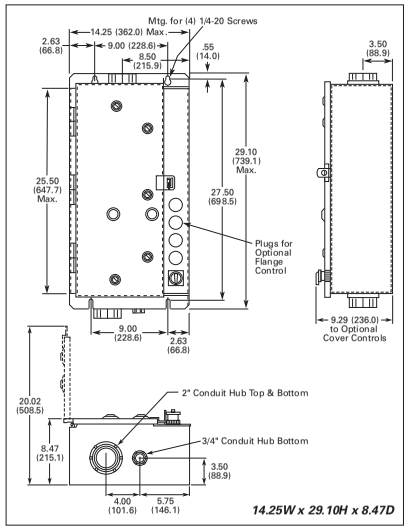

Figure 15-24. Box 8, Type 4X — Approximate Dimensions in Inches (mm)

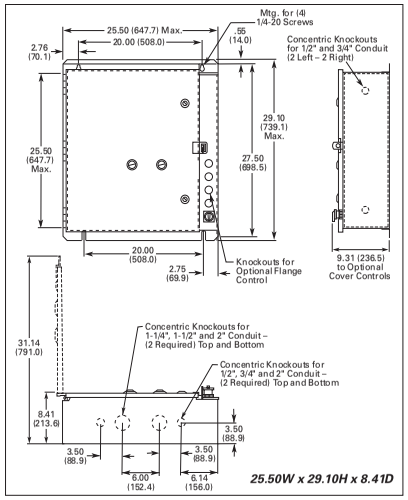

Figure 15-25. Box 9, Type 1 — Approximate Dimensions in Inches (mm)

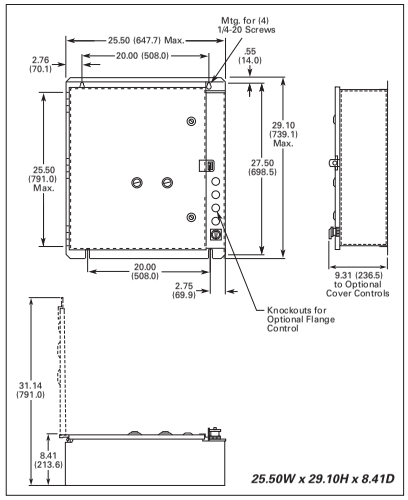

Figure 15-27. Box 9, Type 12 — Approximate Dimensions in Inches (mm)

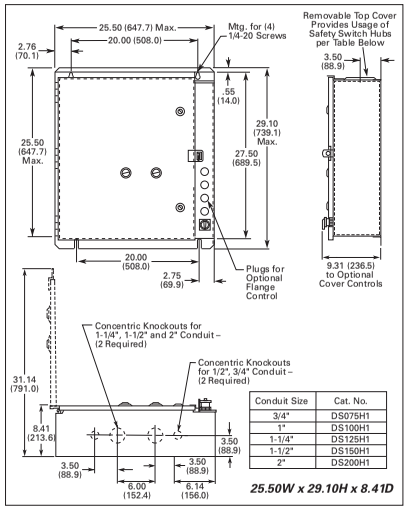

Conduit Size	Cat. No.
3/4"	DS075H1
1"	DS100H1
1-1/4"	DS125H1
1-1/2"	DS150H1
2"	DS200H1

Figure 15-26. Box 9, Type 3R — Approximate Dimensions in Inches (mm)

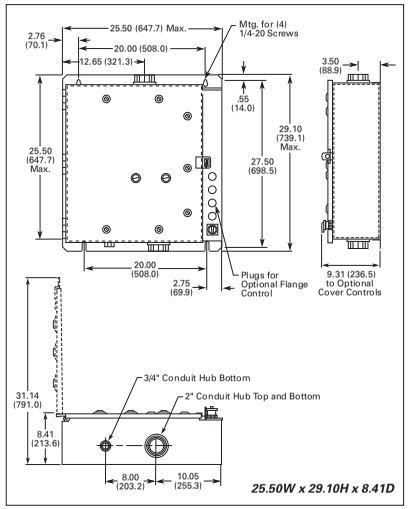

Figure 15-28. Box 9, Type 4X — Approximate Dimensions in Inches (mm)

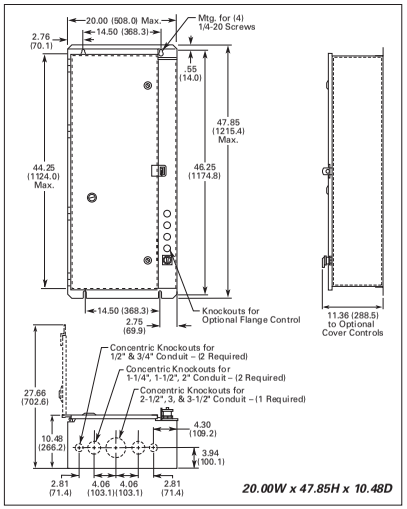

Figure 15-29. Box 10, Type 1 — Approximate Dimensions in Inches (mm)

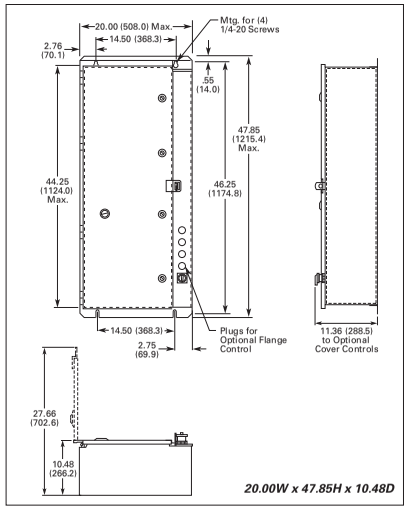

Figure 15-31. Box 10, Type 12 — Approximate Dimensions in Inches (mm)

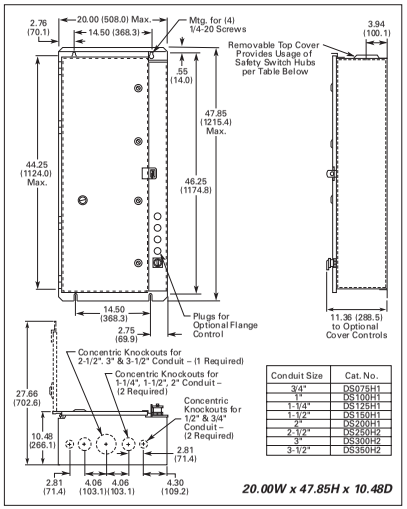

Conduit Size	Cat. No.
3/4"	DS075H1
1"	DS100H1
1-1/4"	DS125H1
1-1/2"	DS150H1
2"	DS200H1
2-1/2"	DS250H2
3"	DS300H2
3-1/2"	DS350H2

Figure 15-30. Box 10, Type 3R — Approximate Dimensions in Inches (mm)

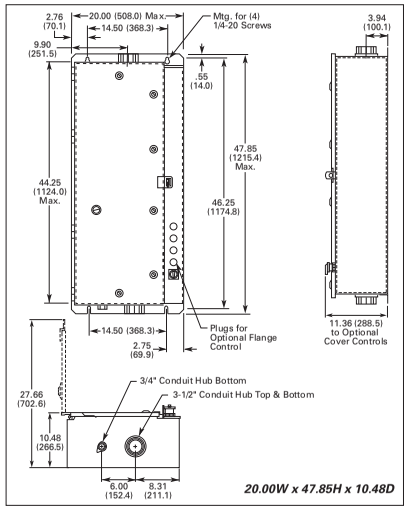

Figure 15-32. Box 10, Type 4X — Approximate Dimensions in Inches (mm)

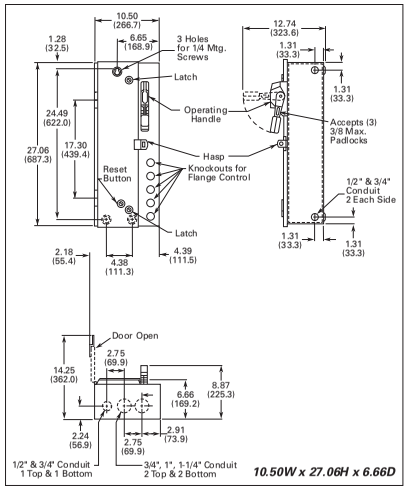

Figure 15-33. Box A, Type 1 — Approximate Dimensions in Inches (mm)

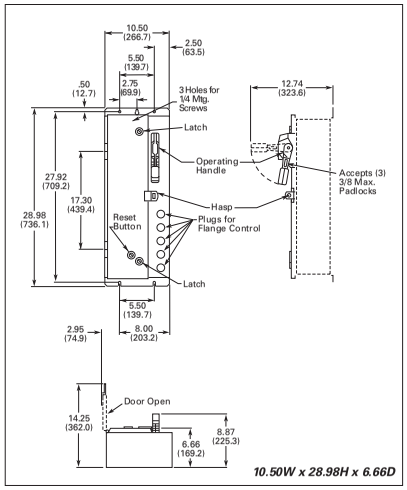

Figure 15-35. Box A, Type 12 — Approximate Dimensions in Inches (mm)

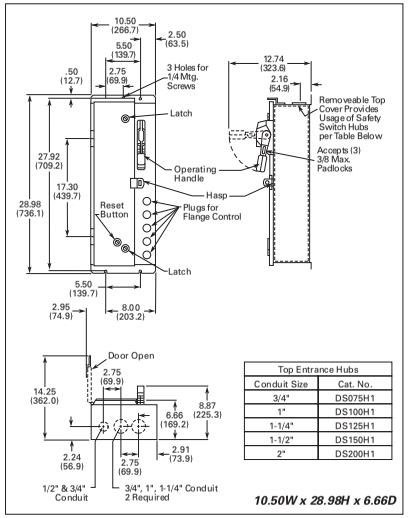

Top Entrance Hubs	
Conduit Size	Cat. No.
3/4"	DS075H1
1"	DS100H1
1-1/4"	DS125H1
1-1/2"	DS150H1
2"	DS200H1

Figure 15-34. Box A, Type 3R — Approximate Dimensions in Inches (mm)

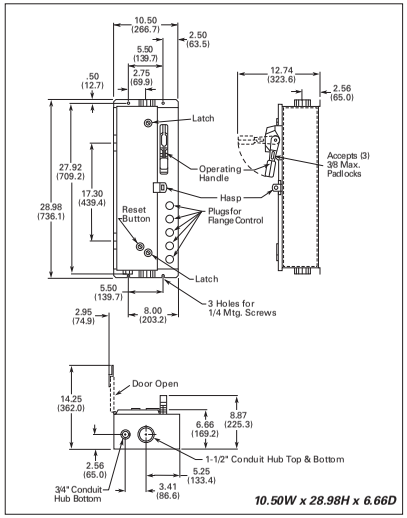

Figure 15-36. Box A, Type 4X — Approximate Dimensions in Inches (mm)

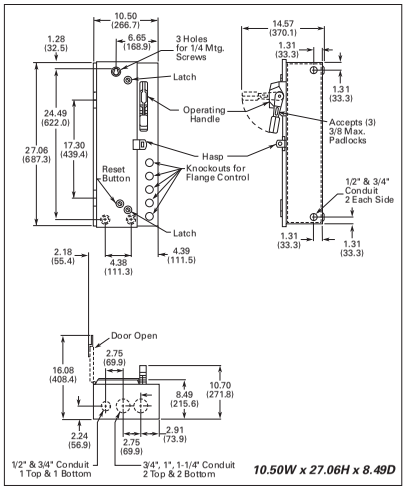

Figure 15-37. Box A1, Type 1 — Approximate Dimensions in Inches (mm)

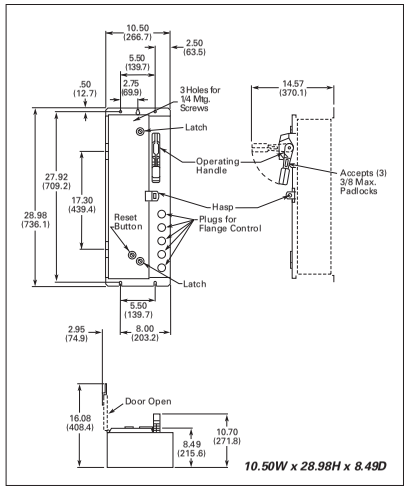

Figure 15-39. Box A1, Type 12 — Approximate Dimensions in Inches (mm)

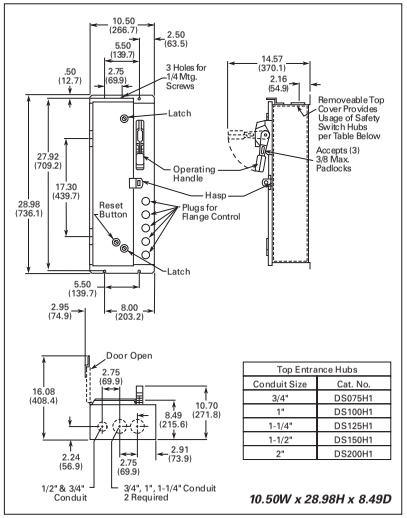

Top Entrance Hubs	
Conduit Size	Cat. No.
3/4"	DS075H1
1"	DS100H1
1-1/4"	DS125H1
1-1/2"	DS150H1
2"	DS200H1

Figure 15-38. Box A1, Type 3R — Approximate Dimensions in Inches (mm)

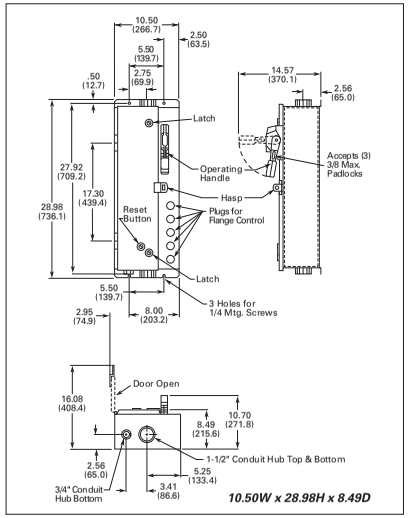

Figure 15-40. Box A1, Type 4X — Approximate Dimensions in Inches (mm)

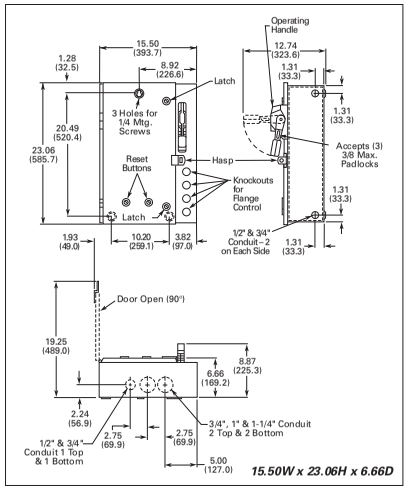

Figure 15-41. Box B, Type 1 — Approximate Dimensions in Inches (mm)

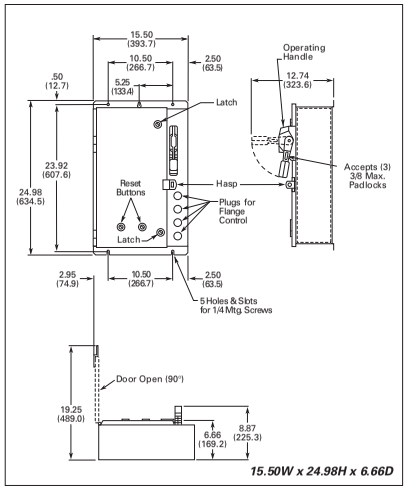

Figure 15-43. Box B, Type 12 — Approximate Dimensions in Inches (mm)

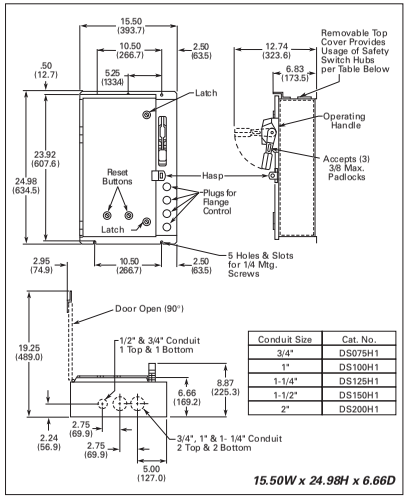

Conduit Size	Cat. No.
3/4"	DS075H1
1"	DS100H1
1-1/4"	DS125H1
1-1/2"	DS150H1
2"	DS200H1

Figure 15-42. Box B, Type 3R — Approximate Dimensions in Inches (mm)

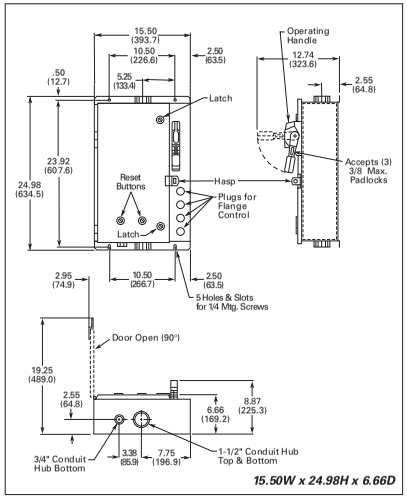

Figure 15-44. Box B, Type 4X — Approximate Dimensions in Inches (mm)

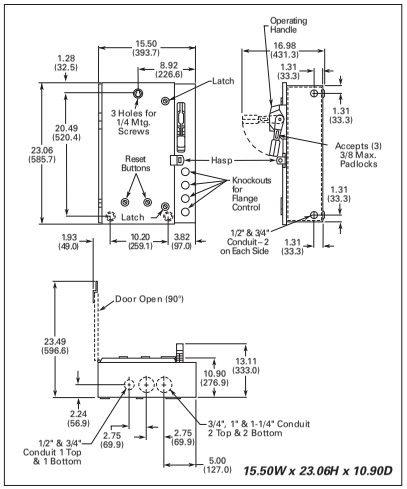

Figure 15-45. Box B1, Type 1 — Approximate Dimensions in Inches (mm)

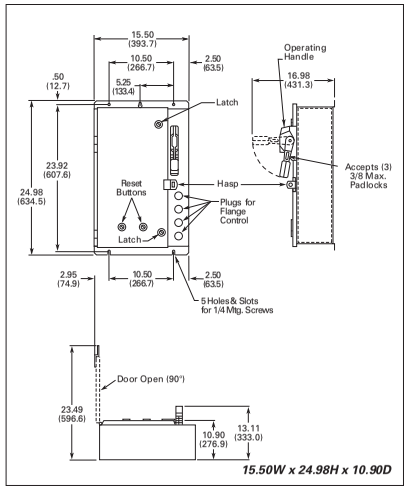

Figure 15-47. Box B1, Type 12 — Approximate Dimensions in Inches (mm)

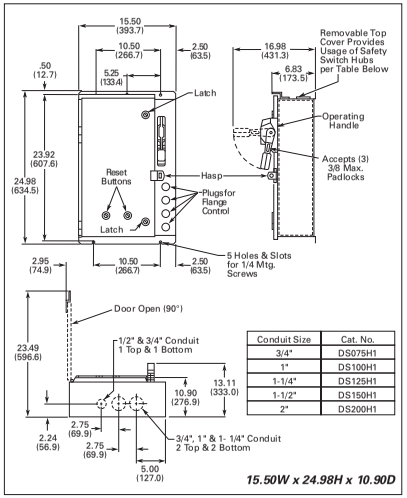

Conduit Size	Cat. No.
3/4"	DS075H1
1"	DS100H1
1-1/4"	DS125H1
1-1/2"	DS150H1
2"	DS200H1

Figure 15-46. Box B1, Type 3R — Approximate Dimensions in Inches (mm)

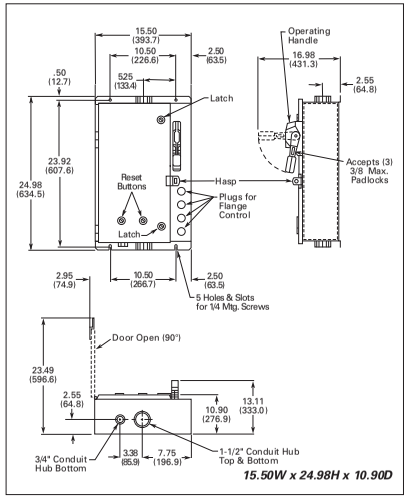

Figure 15-48. Box B1, Type 4X — Approximate Dimensions in Inches (mm)

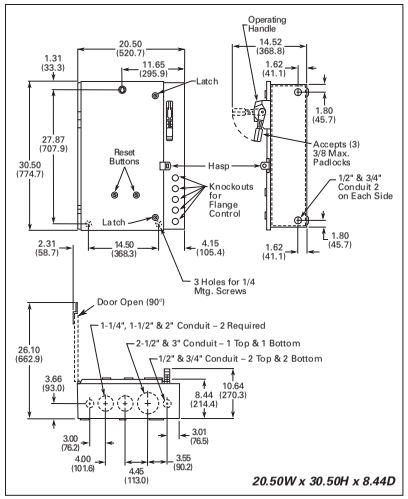

Figure 15-49. Box C, Type 1 — Approximate Dimensions in Inches (mm)

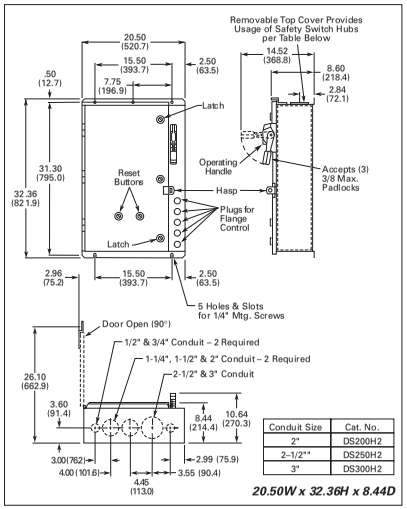

Conduit Size	Cat. No.
2"	DS200H2
2–1/2"*	DS250H2
3"	DS300H2

Figure 15-50. Box C, Type 3R — Approximate Dimensions in Inches (mm)

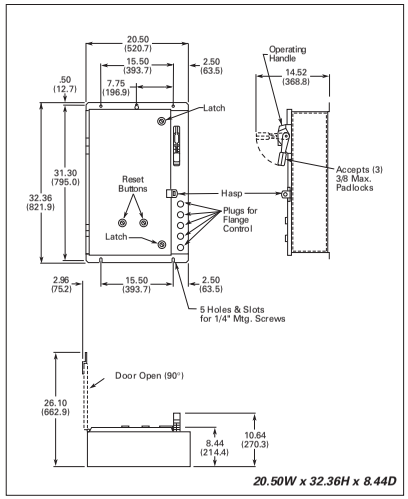

Figure 15-51. Box C, Type 12 — Approximate Dimensions in Inches (mm)

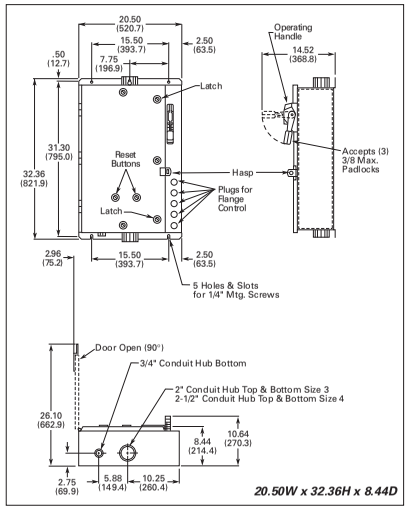

Figure 15-52. Box C, Type 4X — Approximate Dimensions in Inches (mm)

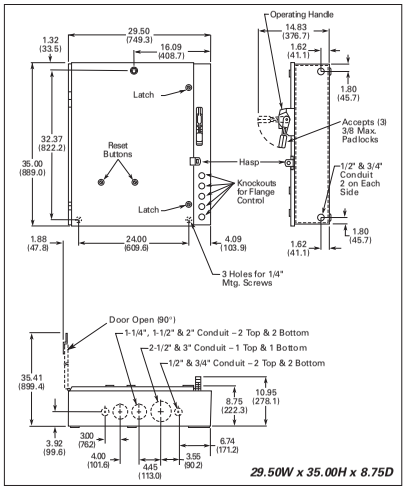

Figure 15-53. Box D, Type 1 — Approximate Dimensions in Inches (mm)

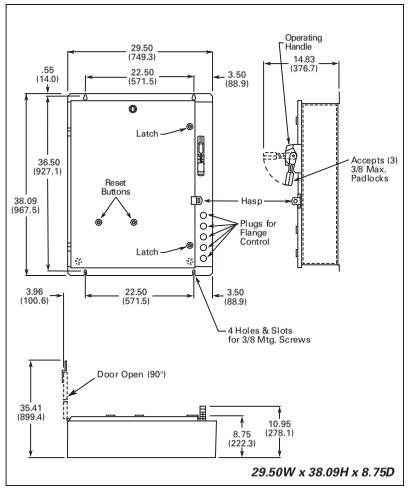

Figure 15-55. Box D, Type 12 — Approximate Dimensions in Inches (mm)

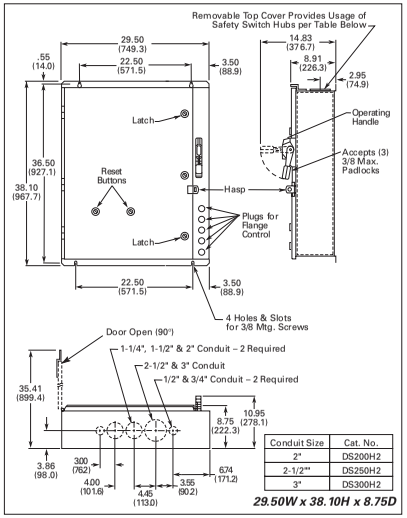

Conduit Size	Cat. No.
2"	DS200H2
2-1/2"*	DS250H2
3"	DS300H2

Figure 15-54. Box D, Type 3R — Approximate Dimensions in Inches (mm)

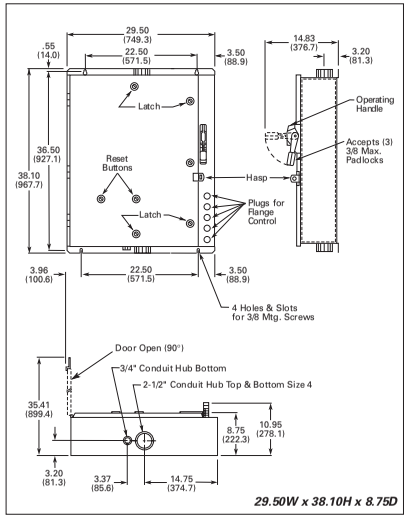

Figure 15-56. Box D, Type 4X — Approximate Dimensions in Inches (mm)

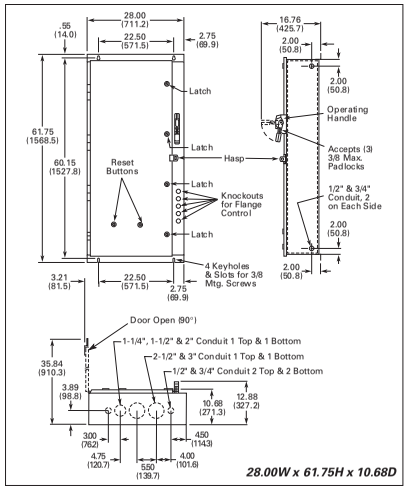

Figure 15-57. Box E, Type 1 — Approximate Dimensions in Inches (mm)

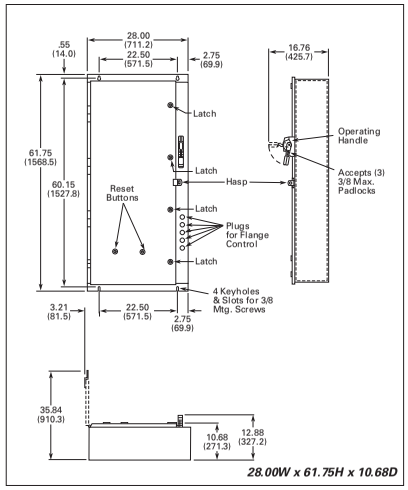

Figure 15-59. Box E, Type 12 — Approximate Dimensions in Inches (mm)

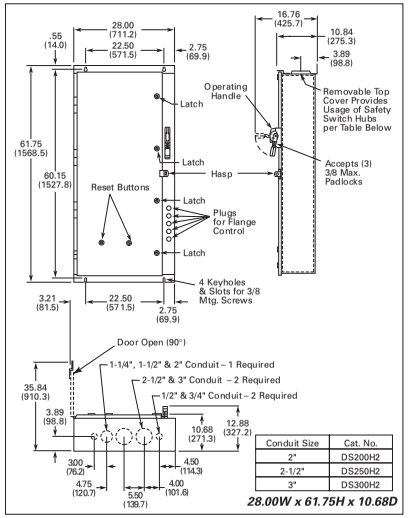

Conduit Size	Cat. No.
2"	DS200H2
2-1/2"	DS250H2
3"	DS300H2

Figure 15-58. Box E, Type 3R — Approximate Dimensions in Inches (mm)

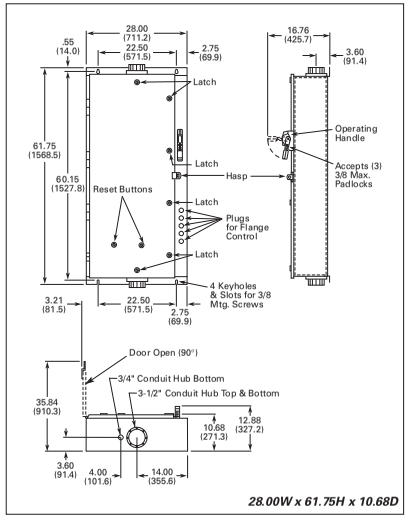

Figure 15-60. Box E, Type 4X — Approximate Dimensions in Inches (mm)

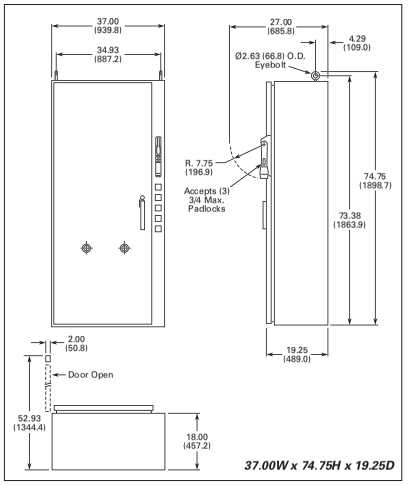

Figure 15-61. Box F1E, Type 1/3R/4/12 — Approximate Dimensions in Inches (mm)

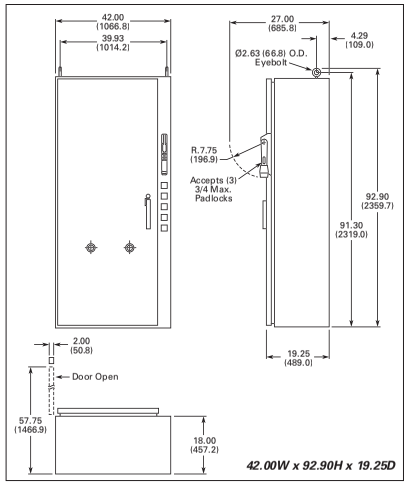

Figure 15-63. Box F2E, Type 1/3R/4/12 — Approximate Dimensions in Inches (mm)

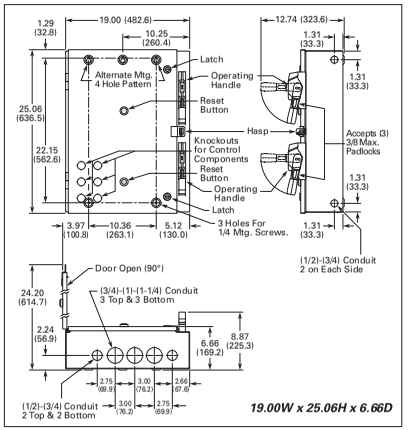

Figure 15-62. Box H, Type 1 — Approximate Dimensions in Inches (mm)

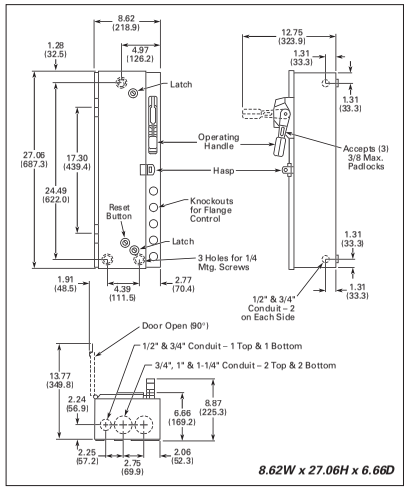

Figure 15-64. Box I, Type 1 ① — Approximate Dimensions in Inches (mm)

① Knockouts are not supplied for Type 12; all other dimensions apply.

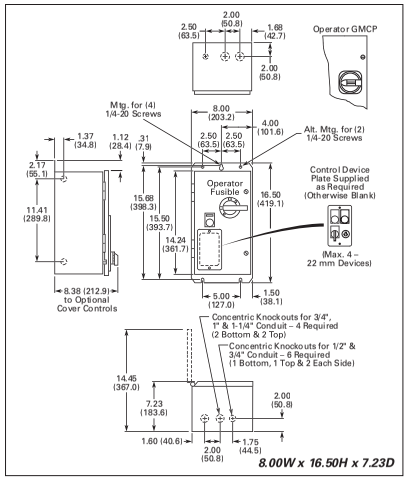

Figure 15-65. Box J ① — Approximate Dimensions in Inches (mm)

① Knockouts are not supplied for Type 12 or 3R types; all other dimensions apply. Consult factory for Type 4X.

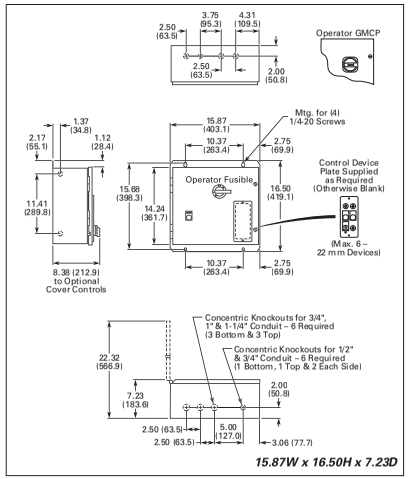

Figure 15-67. Box L ② — Approximate Dimensions in Inches (mm)

② Knockouts are not supplied for Type 12 or 3R types; all other dimensions apply. Consult factory for Type 4X.

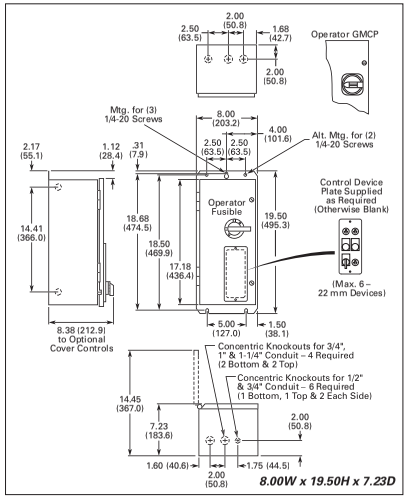

Figure 15-66. Box K ② — Approximate Dimensions in Inches (mm)

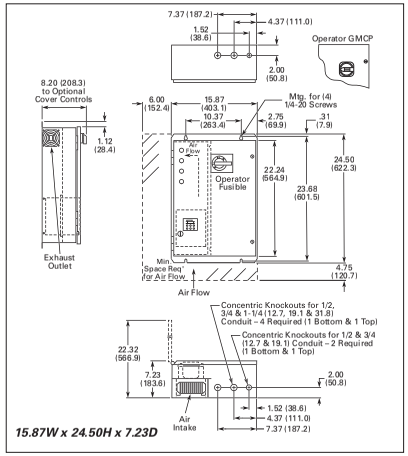

Figure 15-68. Box M, Type 1/12 — Approximate Dimensions in Inches (mm) ③④

③ Knockouts are not supplied for Type 12; all other dimensions apply.
④ For Type 12, clear lens provided.

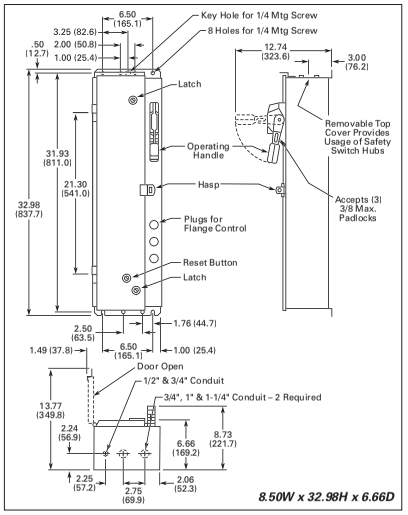

Figure 15-69. Box P1 — Approximate Dimensions in Inches (mm)

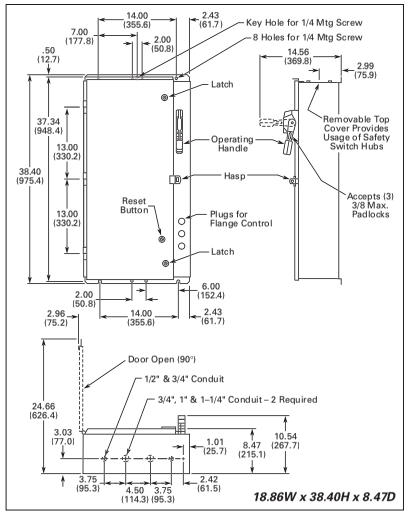

Figure 15-71. Box P3 — Approximate Dimensions in Inches (mm)

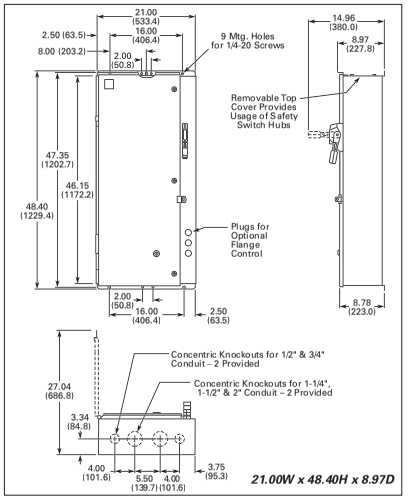

Figure 15-70. Box P5 — Approximate Dimensions in Inches (mm)

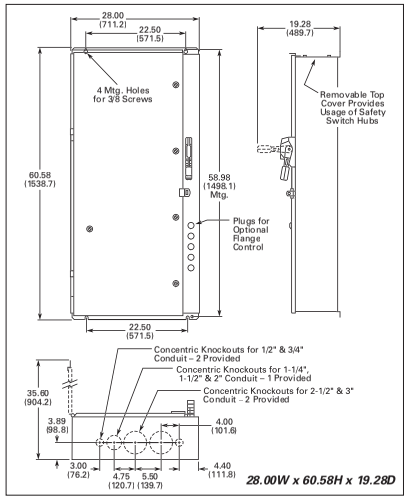

Figure 15-72. Box P7 — Approximate Dimensions in Inches (mm)

Accessories & Modification Codes

Contents

Description — *Page*

Accessories
- *IT.* NEMA 16-2
- Freedom NEMA 16-4
- Advantage NEMA 16-12
- A200 NEMA 16-18
- *XT* IEC 16-23
- Enclosures 16-28
- Lighting Contactors 16-30
- *IT.* Solid-State Soft Starters 16-36
- Adjustable Frequency Drives 16-38
- NEMA Vacuum Break Control 16-39

Modification Codes 16-40

Auxiliary Contacts

IT. NEMA

Auxiliary Contacts

Auxiliary Contacts are available for mounting on Eaton's Cutler-Hammer Intelligent Technologies (*IT.*) Electro-Mechanical Contactors and Starters. The various choices available for non-reversing models are shown in **Tables 16-1** and **16-2,** and their ratings in **Tables 16-3** – **16-5**. For reversing models, the number of auxiliaries indicated is for each of the contactors/starters in the assembly.

Table 16-1. Auxiliary Contact Availability — Sizes 00 – 5

Top Mounted (Maximum Auxiliaries per Contactor/Starter) ②						
Contactor/Starter Size					Contact Type	Catalog Number
Size 00, 0	Size 1	Size 2	Size 3, 4	Size 5		
3	3	3	3	—	1NO	**EMA13**
3	3	3	3	—	1NC	**EMA14**
2	2 ①	3	3	—	1NO-1NC	**EMA15**
2	2 ①	3	3	—	2NO	**EMA16**
2	2 ①	3	3	—	2NC	**EMA17**
2	3	3	3	3	Logic Level 1NO-1NC	**EMA70**

① Other combinations: Single, Dual, Single; Dual, Single, Dual; Dual, Logic Level, Dual.
② For reversers, multiply quantities by two.

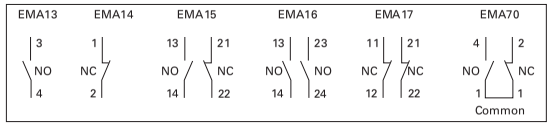

Figure 16-1. Connecting Diagram — Sizes 00 – 5

Table 16-2. Auxiliary Contact — Size 5

Auxiliary Contacts per Non-reversing and Reversing Contactor or Starter			
Max.	Contact Type	Description	Catalog Number
2	1NO	Base auxiliary (max. 1 per side)	**C320KGS41**
2	1NO-1NC	Base auxiliary (max. 1 per side)	**C320KGS42**
6	1NO	C320KGS41 or C320KGS42 required (max. 3 Add-on auxiliaries per side)	**C320KGS20**
2	1NO Logic Level	C320KGS41 or C320KGS42 required (max. 1 Add-on auxiliary per side)	**C320KGS20L**
6	1NC	C320KGS41 or C320KGS42 required (max. 2 Add-on auxiliaries per side)	**C320KGS21**
2	1NC Logic Level	C320KGS41 or C320KGS42 required (max. 1 Add-on auxiliary per side)	**C320KGS21L**
2	1NO-1NC	C320KGS41 or C320KGS42 required (max. 1 Add-on auxiliary per side)	**C320KGS22**
2	1NO-1NC Logic Level	C320KGS41 or C320KGS42 required (max. 1 Add-on auxiliary per side)	**C320KGS22L** ③
3	1NO-1NC Logic Level	Front Mounted Only	**EMA70** ④

③ Form C contacts.
④ For reversers, multiply quantities by two.

Note:
- Side Mounted — Maximum (10) total circuits.
- Front Mounted — Maximum (6) total circuits. ④
- Maximum 4 auxiliaries per side (base + 3 side mounted).
- EMASA/B_ _ have been superseded by the above Catalog Numbers.

Table 16-3. IEC Ratings

DC-13		AC-15	
Ue Voltage	*Ie* Amps.	*Ue* Voltage	*Ie* Amps.
24	5	48	8
48	2.5	120	6
125	1.1	240	4
250	.55	440	2

Table 16-4. NEMA A600 Ratings

Current	AC Voltage			
	120	240	480	600
Make and Interrupting	60	30	15	12
Break	6	3	1.5	1.2
Continuous	10	10	10	10
Thermal	10	10	10	10

Table 16-5. NEMA P300 Ratings

Current	DC Voltage	
	125	250
Make and Interrupting	1.1	.55
Break	1.1	.55
Continuous	5	5
Thermal	5	5

Table 16-6. EMA70 Auxiliary Contact

DC-12		AC-12	
Ue	Ie	Ue	Ie
30	.1	250	.1

Table 16-7. C320KGS20L, C320KGS21L, C320KGS22L Auxiliary Contact Ratings

DC-12		AC-12	
Ue	Ie	Ue	Ie
80	0.1	250	0.1

Starter Network Adapter Product (SNAP)

Cat. No. D77B-DSNAP-X1 with 54 mm IT. Starter

The Starter Network Adapter Product (SNAP) is a front-mount device that serves as a single DeviceNet node, providing communication capability, control and monitoring to Eaton's Cutler-Hammer Intelligent Technologies (*IT.*) Electromechanical Starters as well as the *IT.* S75X SoftStart.

When HAND-OFF-AUTO is required, the HOA option will allow for the connection of hard wired operators. This option allows for Hand Control even if the DSNAP is not connected.

For more information and pricing, see Publication No. CA08102001E, Tab 50.

Lug Kits

Table 16-8. Lug Kits

NEMA Size	Description	Catalog Number
1	Contactor or Starter Line or Load (3 Lugs)	**EMLUGKTC**
2	Contactor or Starter Line or Load	**EMLUGKTD**
3, 4	Contactor Line or Load, Starter Line Starter Load	**EMLUGKTLE** **EMLUGKTTE**
5	Contactor or Starter Line or Load, Horizontal Contactor or Starter Line or Load, Vertical	**EMLUGKTFA** **EMLUGKTFB**

Table 16-9. Ring Lug Retrofit Kits

Product	NEMA Sizes 3, 4			NEMA Size 5		
	Catalog Number			Catalog Number		
	Factory Installed	Retrofit Kits ①	Lug Kits ②	Factory Installed	Retrofit Kits ①	Lug Kits ②
N111 **N511**	Add "**-RTX**" Add "**-RTX**"	**EMRTXXTEN** **EMRTXXTER**	**EMLUGREN** **EMLUGRER**	Add "**-RTX**" Add "**-RTX**"	**EMRTXXTF** **EMRTXXTF**	**EMLUGRFC** **EMLUGRFC**
N101 **N501**	Add "**-RTX**" Add "**-RTX**"	**EMRTXXTEN** **EMRTXXTER**	**EMLUGREN** **EMLUGRER**	Add "**-RTX**" Add "**-RTX**"	**EMRTXXTF** **EMRTXXTF**	**EMLUGRFS** **EMLUGRFS**
N05N **N06N**	Add "**-RTX**" Add "**-RTX**"			Add "**-RTX**" Add "**-RTX**"		
N02N **N03N**	Add "**-RTX**" Add "**-RTX**"					
N04N	Add "**-RTX**"					

① Retrofit Kits used to field install ring lugs on standard lug units.
② Lug Kits used to field install standard lugs into factory assembled ring lug units.

Reversing Kits

Includes Fanning Strips, Mechanical Interlock, Mounting Plate and hardware.

Table 16-10. Reversing Kits ③

NEMA Size	Catalog Number
00, 0	**EMRKTB**
1	**EMRKTC**
2	**EMRKTD**
3, 4	**EMRKTE**
5	**EMRKTF**

③ For Contactor and Starter.

Note: Also order separately the appropriate contact blocks and overload relay.

Freedom NEMA

Auxiliary Contacts

NEMA Sizes 00 – 2

The auxiliary contacts listed below are designed for installation on Freedom Series starters and contactors. Snap-on design facilitates quick, easy installation.

These bifurcated design contact blocks, featuring silver cadmium alloy contacts, are well suited for use in very low energy (logic level) circuits.

Side Mounted

Top Mounted

Table 16-11. Selection Product

Description	Contact Configuration Code ①	Catalog Number
Side Mounted		
1NO 1NC	10 01	**C320KGS1** **C320KGS2**
1NO-1NC 2NO 2NC 1NO-1NCI 1NO (EC)-1NC (LO) 1NCI	11 20 02 N/A N/A N/A	**C320KGS3** **C320KGS4** **C320KGS5** **C320KGS6** **C320KGS7** **C320KGS8**
Top Mounted		
1NO 1NC	10 01	**C320KGT1** **C320KGT2**
1NO-1NC 2NO 2NC 1NO-1NCI 1NO (EC)-1NC (LO) 1NCI	11 20 02 N/A N/A N/A	**C320KGT3** **C320KGT4** **C320KGT5** **C320KGT6** **C320KGT7** **C320KGT8**
3NO 2NO-1NC 1NO-2NC 3NC 4NO	30 21 12 03 40	**C320KGT9** **C320KGT10** **C320KGT11** **C320KGT12** **C320KGT13**
3NO-1NC 2NO-2NC 1NO-3NC 4NC 3NO-1NCI	31 22 13 04 N/A	**C320KGT14** **C320KGT15** **C320KGT16** **C320KGT17** **C320KGT18**
2NO-1NCI-1NC 2NO-1NO (EC)-1NC (LO) 1NO-1NC-1NO (EC)-1NC (LO)	N/A N/A N/A	**C320KGT19** **C320KGT20** **C320KGT21**

Note: NCI = Normally Closed early opening designed for use in reversing applications. EC = Early Closing. LO = Late Opening.
① For reference only — not part of Catalog Number. See above right.

Contact Configuration Code

This two-digit code is found on the auxiliary contact to assist in identifying the specific contact configuration. The first digit indicates the quantity of NO contacts and the second indicates the quantity of NC contacts.

NEMA Sizes 3 – 8

Base Auxiliary Contact
Cat. No. C320KGS42

Auxiliary Contact
Cat. No. C320KGS22

Table 16-12. Product Selection

Circuit	Contact Configuration Code ②	Catalog Number	
Base Auxiliary Contacts — NEMA Sizes 3 – 5			
		NEMA Size 3	NEMA Sizes 4 – 5
NO NO-NC	10 11	**C320KGS31** **C320KGS32**	**C320KGS41** **C320KGS42**
Auxiliary Contacts — NEMA Sizes 3 – 5			
		Catalog Number	
NO NC NO-NC ③	10 01 11	**C320KGS20** **C320KGS21** **C320KGS22**	
Auxiliary Contacts — NEMA Sizes 6 – 8			
		Size	Catalog Number
NO-NC 2NO-2NC	11 22	NEMA 8 NEMA 6 – 7	**C320KA5** **C320KA6**

② For reference only — not part of Catalog Number. See above.
③ NO-NC occupies two positions — L2 and L3, or R2 and R3. See next page.

Auxiliary Contact Ratings (Amperes)

Table 16-13. Ratings — NEMA A600

Current	AC Volts			
	120V	240V	480V	600V
Make and Interrupting Break Continuous	60 6 10	30 3 10	15 1.5 10	12 1 10

Table 16-14. Ratings — NEMA P300

Continuous Thermal Rating: 5A	
DC Volts	Make/Break Amperes
125 250	1.10 .55

Table 16-15. Ratings — Logic Level

Minimum Ratings for Logic Level and Hostile Atmosphere Application	
Minimum Amperes Minimum Volts	20 mA 24V AC/DC

Table 16-16. Ratings — C320KGS20L, C320KGS21L, C320KGS22L

DC-12		AC-12	
Ue	Ie	Ue	Ie
80	0.1	250	0.1

Auxiliary Contact Location

NEMA Sizes 00 – 2

The sketches below illustrate the maximum number of auxiliary contacts that can be assembled to a contactor or starter and their locations.

Table 16-17. Auxiliary Contacts

Catalog Number	Size	Poles	Available Mounting Positions ①②	
			Open Type	Enclosed
AN16	00 0 – 2	3 3	T1, L1, R1 T1, L1	L1 L1
AN56	00 – 2	3	T1, T2	—
CN15	00 0 – 2 1, 2 1, 2	2 – 4 2 – 3 4 5	T1, L1, R1 T1, L1 T1, L1 T1, L1	L1 L1 — —
CN35	10A 20 – 60A 60A 60A	2 – 4 2 – 3 4 5	T1, L1, R1 T1, L1 T1, L1 T1, L1	L1 L1 — —
CN55	00 – 2	3	T1, T2	—

① Available positions on contactors or starters other than what is factory installed.
② When a pneumatic timer is mounted on contactor, only side mounted auxiliary contact positions are available. The solid-state timer, when added, takes up side mounted auxiliary contact position.

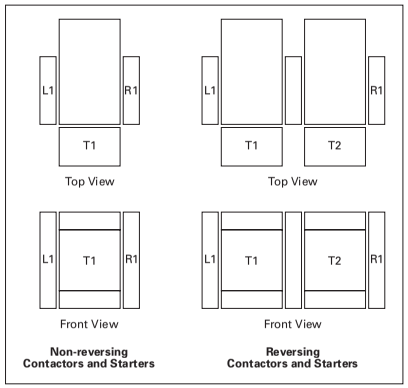

Figure 16-2. Auxiliary Contact Location

NEMA Sizes 3 – 8

The sketches below illustrate the maximum number of auxiliary contacts that can be assembled to a contactor and their locations.

Note: A Base Auxiliary Contact must be added in position R1 before additional auxiliary contacts can be mounted on NEMA Size 3 or in L1 on NEMA Sizes 4 – 5.

Table 16-18. Mounting Positions

Size	Available Mounting Positions ③
NEMA Size 3	R2, R3, L1, L2, L3
NEMA Sizes 4 – 5	L2, L3, R1, R2, R3
NEMA Sizes 6 – 7	R1
NEMA Size 8	L2, R2

③ Available positions on contactors or starters other than what is factory installed.

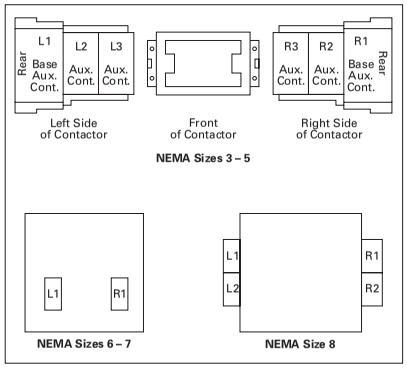

Figure 16-3. Auxiliary Contact Location

Heater Pack Selection

Heater packs H2001B to H2017B and H2101B to H2117B are to be used only with Series B overload relays Catalog Numbers C306DN3B (Part No. 10-7016) and C306GN3B (Part No. 10-7020). The load lugs are built into the overload relay base to allow load wiring prior to heater pack installation. The previous heater design had integral load lugs. The Series B heater packs are electrically equivalent to the previous heater design. Heaters H2018-3 to H2024-3 have not changed.

Note: The series of a starter is the last digit of the listed Catalog Number. EXAMPLE: AN16DN0A**B**.

Table 16-19. Starters with Series B Overload Relays

NEMA — AN Type	
Size	**Series**
00 – 0	**C**
1 – 2	**B**
5	**B**
6	**C**
7 – 8	**B**

Table 16-20. Fast Trip — Class 10 Heater Selection

Overload Relay Size	Motor Full Load Ampere Rating				Catalog Number (Includes 3 Heater Packs) ①
	Dial Position				
	A	B	C	D	
For Use with NEMA Sizes 00 – 0 Series C, NEMA Sizes 1 – 2 Series B					
32A or 75A	.260	.313	.367	.420	**H2101B-3**
	.384	.464	.543	.623	**H2102B-3**
	.570	.688	.806	.924	**H2103B-3**
	.846	1.02	1.20	1.37	**H2104B-3**
	1.28	1.55	1.83	2.10	**H2105B-3**
	1.92	2.33	2.74	3.15	**H2106B-3**
	2.30	2.79	3.28	3.77	**H2107B-3**
	3.38	4.10	4.82	5.54	**H2108B-3**
	4.96	6.03	7.09	8.16	**H2109B-3**
	7.07	8.58	10.1	11.6	**H2110B-3**
	9.60	11.2	12.8	14.4	**H2111B-3**
	14.4	17.5	20.7	23.8	**H2112B-3**
	18.7	21.8	25.0	28.1	**H2113B-3**
	23.5	27.3	31.0	34.8	**H2114B-3**
For Use with NEMA Size 2 — Series B					
75A	28.3	32.6	37.0	41.3	**H2115B-3**
	36.6	42.3	48.1	53.8	**H2116B-3**
	53.8	60.8	67.9	74.9	**H2117B-3**
For Use with Size 5 Starters Only — Series B					
32A ②	51	61	72	82	**H2104B-3**
	77	93	110	126	**H2105B-3**
	115	140	164	189	**H2106B-3**
	138	167	197	226	**H2107B-3**
	203	246	289	—	**H2108B-3**
For Use with Size 6 Starters Only — Series B					
32A ②	154	186	220	252	**H2105B-3**
	230	280	329	378	**H2106B-3**
	276	335	394	452	**H2107B-3**
	406	492	578	—	**H2108B-3**
For Use with Size 7 Starters Only — Series B					
32A ②	169	204	240	274	**H2104B-3**
	256	310	366	420	**H2105B-3**
	384	466	543	630	**H2106B-3**
	460	558	656	754	**H2107B-3**
	676	820	—	—	**H2108B-3**
For Use with Size 8 Starters Only — Series B					
32A ②	254	306	360	411	**H2104B-3**
	384	465	549	630	**H2105B-3**
	576	699	822	945	**H2106B-3**
	690	837	984	1131	**H2107B-3**
	1014	1230	—	—	**H2108B-3**

① Heater packs are shipped 3 to a carton. Catalog Numbers are for 3 heater packs.
② Sizes 5 – 8 use the 32A overload relay with current transformers.

Table 16-21. Standard Trip — Class 20 Heater Selection

Overload Relay Size	Motor Full Load Ampere Rating				Catalog Number (Includes 3 Heater Packs) ③
	Dial Position				
	A	B	C	D	
For Use with NEMA Sizes 00 – 0 Series C, NEMA Sizes 1 – 2 Series B					
32A or 75A	.254	.306	.359	.411	**H2001B-3**
	.375	.452	.530	.607	**H2002B-3**
	.560	.676	.791	.907	**H2003B-3**
	.814	.983	1.15	1.32	**H2004B-3**
	1.20	1.45	1.71	1.96	**H2005B-3**
	1.79	2.16	2.53	2.90	**H2006B-3**
	2.15	2.60	3.04	3.49	**H2007B-3**
	3.23	3.90	4.56	5.23	**H2008B-3**
	4.55	5.50	6.45	7.40	**H2009B-3**
	6.75	8.17	9.58	11.0	**H2010B-3**
	9.14	10.8	12.4	14.0	**H2011B-3**
	14.0	16.9	19.9	22.8	**H2012B-3**
	18.7	22.7	26.7	30.7	**H2013B-3**
	23.5	28.5	33.5	38.5	**H2014B-3**
For Use with NEMA Size 2 — Series B					
75A	29.0	34.0	39.1	44.1	**H2015B-3**
	39.6	45.5	51.5	57.4	**H2016B-3**
	53.9	60.9	67.9	74.9	**H2017B-3**
For Use with NEMA Sizes 3 – 4 — Series A					
105A or 144A	8.0	9.2	10.3	11.5	**H2025-3**
	11.4	12.8	14.3	15.7	**H2026-3**
	14.3	15.7	17.4	19.0	**H2027-3**
	18.0	20.2	22.3	24.5	**H2018-3**
	24.6	27.6	30.5	33.4	**H2019-3**
	33.5	37.5	41.5	45.6	**H2020-3**
	45.7	51.2	56.7	62.1	**H2021-3**
	62.2	69.7	77.1	84.6	**H2022-3**
	84.7	95.0	105.0	115.0	**H2023-3**
	106.0	118.0	131.0	144.0	**H2024-3**
For Use with Size 5 Starters — Series B					
32A ④	49	59	69	79	**H2004B-3**
	72	87	103	118	**H2005B-3**
	107	130	152	174	**H2006B-3**
	129	156	182	209	**H2007B-3**
	194	234	274	—	**H2008B-3**
For Use with Size 6 Starters Only — Series B					
32A ④	144	174	205	235	**H2005B-3**
	215	259	304	348	**H2006B-3**
	258	312	365	419	**H2007B-3**
	388	468	547	627	**H2008B-3**
For Use with Size 7 Starters Only — Series B					
32A ④	163	197	230	264	**H2004B-3**
	240	290	342	392	**H2005B-3**
	358	432	506	580	**H2006B-3**
	430	520	608	698	**H2007B-3**
	646	780	912	—	**H2008B-3**
For Use with Size 8 Starters Only — Series B					
32A ④	244	295	345	396	**H2004B-3**
	360	435	513	588	**H2005B-3**
	537	648	759	870	**H2006B-3**
	645	780	912	1047	**H2007B-3**
	969	1170	1368	—	**H2008B-3**

③ Heater packs are shipped 3 to a carton. Catalog Numbers are for 3 heater packs.
④ Sizes 5 – 8 use the 32A overload relay with current transformers.

DC Magnet Coils

When Ordering Specify

Conversion Kit for Field Assembly

- Catalog Number

Factory Installed DC Coil

- For factory installed DC magnet coil on AC contactors or non-combination starters (open type only), substitute the Code Suffix from table below for the magnet coil identifier in the device Catalog Number.

  EXAMPLE: For Size 0 AC contactor with a 24V DC coil, change CN15BN3**A**C to CN15BN3**T1**C.

Application

- Connect for separate control
- Not for use with cover control switch operators
- Use twin break, heavy-duty pilot devices
- Designed for +10%, -20% rated voltage, continuous duty operation

Non-reversing Kit Consists of:

- 1 Encapsulated DC magnet coil
- 1 NCI or NO/NCI side mounted auxiliary contact

  Note: These kits are supplied with a NO/NCI side mounted auxiliary contact in place of the NCI contact.
- 2 Blue colored connection wires
- 1 Instruction publication

Operation

These DC coil kits have separate pick-up and seal windings. A **special** (side mounted) early-break NCI auxiliary contact is used to either disconnect the pick-up winding or insert the seal winding in series with the pick-up winding, depending on the frame size of the contactor. DC coil kits come in two styles, a suffix **1** and a suffix **4**. The 1 suffix contains only the **special** (side mounted) early break NCI auxiliary contact. The 4 suffix contains a NO contact in the same package as the **special** (side mounted) early-break NCI auxiliary contact.

Note: For NEMA Sizes 00 and 0 contactors may utilize either suffix 1 or 4 DC coil kits; starters may utilize suffix 4 DC coil kits only. For NEMA Sizes 1 and 2, both contactors and starters may utilize a suffix 4 DC coil kit only.

On the above sizes only, when the **special** auxiliary package is mounted on the side of a contactor or starter, **no** standard auxiliary contact may be mounted on the same side.

Note: For NEMA Sizes 3 – 5, the special coil NCI clearing contact is an add-on auxiliary (**must** mount on a base mount auxiliary contact; normally a 1NO). This arrangement will normally account for two of the three contact positions on the side of each contactor or starter.

See **Figure 16-4**, **Page 16-8**.

Table 16-22. Product Selection

Contactor or Starter Size	Conversion Data					Complete Conversion Kit		Factory Installed
	Volts	Magnet Coil			NCI Interlock Number			
NEMA		Coil Number	Amps P.U./Seal	Watts P.U./Seal		Catalog Number	Ship Wt. Lbs. (kg)	Code Suffix
Non-reversing — Kit includes NCI Side Mounted Auxiliary Contact								
00 and 0	12	**9-2988-11**	6.4/.28	76.8/3.36	**C320KGD1**	**C335KD3R1**	1.0 (.5)	**R1**
CN35 – A, B, D	24	**9-2988-12**	3.2/.14	76.8/3.36	**C320KGD1**	**C335KD3T1**		**T1**
D15 Relays	48	**9-2988-13**	1.6/.07	76.8/3.36	**C320KGD1**	**C335KD3W1**		**W1**
	120	**9-2988-14**	.64/.028	76.8/3.36	**C320KGD1**	**C335KD3A1**		**A1**
①	12	**9-2988-11**	6.4/.28	76.8/3.36	**C320KGD2** ①	**C335KD3R4**	1.0 (.5)	**R4**
00 and 0	24	**9-2988-12**	3.2/.14	76.8/3.36	**C320KGD2** ①	**C335KD3T4**		**T4**
CN35 – A, B, D	48	**9-2988-13**	1.6/.07	76.8/3.36	**C320KGD2** ①	**C335KD3W4**		**W4**
D15 Relays	120	**9-2988-14**	.64/.028	76.8/3.36	**C320KGD2** ①	**C335KD3A4**		**A4**
1 and 2	12	**9-2990-1**	15.4/.42	185/4.98	**C320KGD5**	**C335KD4R4**	1.0 (.5)	**R4**
CN35 – G	24	**9-2990-2**	7.7/.21	185/4.96	**C320KGD5**	**C335KD4T4**		**T4**
	48	**9-2990-3**	3.9/.11	185/5.04	**C320KGD5**	**C335KD4W4**		**W4**
	120	**9-2990-4**	1.5/.041	185/4.87	**C320KGD5**	**C335KD4A4**		**A4**
3	12	**9-3002-1**	24/.40	293/4.84	**C320KGD3**	**C335KD5R1**	2.0 (.9)	**R1**
CN35 – K	24	**9-3002-2**	12/.20	288/4.75	**C320KGD3**	**C335KD5T1**		**T1**
	48	**9-3002-3**	6.1/.097	295/4.67	**C320KGD3**	**C335KD5W1**		**W1**
	120	**9-3002-4**	2.5/.038	298/4.57	**C320KGD3**	**C335KD5A1**		**A1**
4 and 5	24	**9-2026-4**	18/.22	400/5.3	**C320KGD3**	**C335KA3T1**	2.5 (1.1)	**T1B**
CN35 – N, S	48	**9-2026-3**	9/.11	400/5.2	**C320KGD3**	**C335KA3W1**		**W1B**
	120	**9-2026-2**	3.3/.05	450/5.4	**C320KGD3**	**C335KA3A1**		**A1B**
	240	**9-2026-1**	1.7/.02	440/4.9	**C320KGD3**	**C335KA3B1**		**B1B**
Reversing								
00 and 0	12	**9-2988-1**	6.4/.28	76.8/3.36	**C320KGD1**	**C335KD3R1** ②	1.0 (0.9)	**R1** ③
CN35 – A, B, D	24	**9-2988-2**	3.2/.14	76.8/3.36	**C320KGD1**	**C335KD3T1** ②		**T1** ③
D15 Relays	48	**9-2988-3**	1.6/.07	76.8/3.36	**C320KGD1**	**C335KD3W1** ②		**W1** ③
	120	**9-2988-4**	.64/.028	76.8/3.36	**C320KGD1**	**C335KD3A1** ②		**A1** ③
1 and 2	12	**9-2990-1**	15.4/.42	185/4.98	**C320KGD3**	④	—	**R1** ③
CN35 – G	24	**9-2990-2**	7.7/.21	185/4.96	**C320KGD3**	④		**T1** ③
	48	**9-2990-3**	3.9/.11	185/5.04	**C320KGD3**	④		**W1** ③
	120	**9-2990-4**	1.5/.041	185/4.87	**C320KGD3**	④		**A1** ③

① These kits are supplied with a NO/NCI side mounted auxiliary contact in place of the NCI contact.
② Kit does not include mechanical interlock or crossover wiring. Two NO/NCI top mounted auxiliary contacts are supplied for electrical interlocking.
③ Factory installed DC coils on NEMA contactors and starters include a NO/NC top mounted auxiliary contact on each contactor for electrical interlocking.
④ Available factory assembled only.

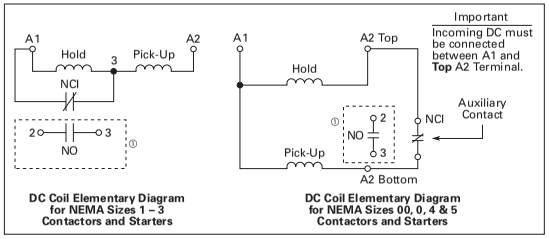

Figure 16-4. Elementary Diagrams
① 1NO available in Suffix 4 kits only.

Remote Reset Module (32A Overload Relay)

The C316RR remote reset module for the C316F, C316S and C316U overload relays allows remote resetting of tripped (32A) overload relays by means of an electrical solenoid attachment which mounts on the side of the overload relay.

Table 16-23. Product Selection

Remote Reset Module Operating Voltage	Catalog Number
24V 50/60 Hz	**C316RR1U**
110V 50/60 Hz	**C316RR1A**

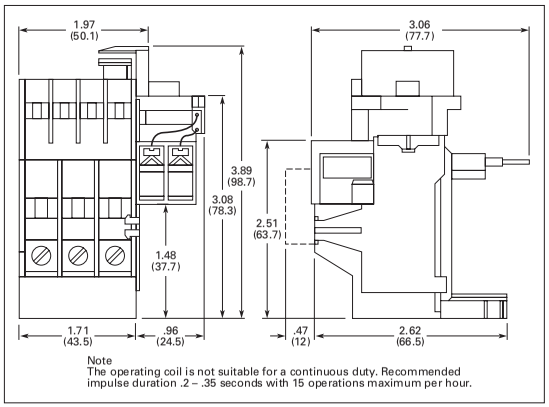

Figure 16-5. Remote Reset Module — Approximate Dimensions in Inches (mm)

3-Pole Top Mounted Fuse Block Kit

NEMA Sizes 00 – 2

Field mount to Freedom Series starters and contactors. Designed to save space and reduce installation costs. They provide short circuit protection for branch circuits.

Mounted Fuse Block Kit

Table 16-24. Fuse Block Kits

Fuse Type		Catalog Number
Class H	— 30A 250V	**C350KH21**
Class R	— 30A 250V	**C350KR21**
Class G	— 15A 300V	**C350KG37**
Class G	— 20A 300V	**C350KG38**
Class G	— 30A 300V	**C350KG31**
Class G	— 60A 300V	**C350KG32**
Class T	— 30A 300V	**C350KT31**
Class T	— 60A 300V	**C350KT32**
Class J	— 30A 600V	**C350KJ61**
Class J	— 60A 600V	**C350KJ62**
Type M	— 30A 600V ①	**C350KM61**
Class CC	— 30A 600V	**C350KC63**
Class T	— 30A 600V	**C350KT61**
Class T	— 60A 600V	**C350KT62**

① Type M fuse block not approved for branch circuit protection.

Table 16-25. Approximate Dimensions

Fuse Block			Dimensions in Inches (mm)			
Class	Amperes	Volts	Wide A	High B	Deep C	D
G	15, 20, 30 60	300 300	2.40 (61.0) 2.62 (66.5)	3.00 (76.2) 4.25 (108.0)	2.04 (51.8) 2.08 (52.8)	— —
H	30	250	3.00 (76.2)	3.10 (78.7)	2.23 (56.6)	3.62 (91.9)
J	30, 60	600	4.81 (122.2)	4.12 (104.6)	2.82 (71.6)	—
M, CC	30	600	2.40 (61.0)	3.00 (76.2)	2.04 (51.8)	—
R	30	250	3.00 (76.2)	3.10 (78.7)	2.23 (56.6)	3.62 (91.9)
T	30, 60 30 60	300 600 600	3.44 (87.4) 3.75 (95.3) 4.87 (123.7)	3.00 (76.2) 3.31 (84.1) 3.00 (76.2)	2.33 (59.2) 2.26 (57.4) 2.58 (65.5)	— — —

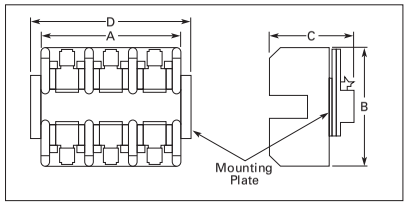

Figure 16-6. Approximate Dimensions in Inches (mm)

Mechanical Interlock and Reversing Kits

Mechanical interlocks and reversing kits are designed for field assembly of reversing contactors or starters from Freedom Series components. The Reversing Kits include a Mechanical Interlock, stabilizer bar and a pre-cut, trimmed and formed wire set. Auxiliary contacts, if required, must be ordered separately. See **Page 16-4**.

Cat. No. C321KM60B

Part No. 23-7165

Wire Set

Table 16-26. Mechanical Interlock Only ②③

Application		Catalog Number
NEMA Size	Contactor Mounting	
00 – 2	Horizontal	**C321KM60B**
3	Horizontal	**C321KM30**
3 to 4	Horizontal	**C321KM43**
4	Horizontal	**C321KM40**
4 to 5	Horizontal	**C321KM45**
4 to 6	Horizontal	**C321KM80**
5	Horizontal	**C321KM50**
5 to 6	Horizontal	**C321KM56**
6	Horizontal	**C321KM70**
6 to 7	Horizontal	**C321KM90**
7	Horizontal	**C321KM34**
4 or 5 to 5	Vertical	**C321KM55**
5 to 6	Vertical	**C321KM65**
6	Vertical	**C321KM66**
6 to 7	Vertical	**C321KM67**

② Without cross-wiring.
③ For use with latest series product.

Table 16-27. Reversing Kits (Horizontal Contactor Mounting Only)

Application	Catalog Number
NEMA Size	
00	**C321KM60K14B**
0	**C321KM60K13B**
1	**C321KM60K15B**
2	**C321KM60K16B**
3	**C321KM60K17** ④
—	**C321KM60K21** ④
—	**C321KM60K18** ④
4	**C321KM60K19** ④
5	**C321KM60K20** ④
—	**C321KM60K44** ④

④ Kit includes (2) NC auxiliary contacts.

Solid-State Timers

Solid-State ON DELAY Timer — Side Mounted on Freedom Series NEMA 00 – 2 and C25D, C25E and C25F Frame

This timer is designed to be **wired in series with the load** (typically a coil). When the START button is pushed (power applied to timer), the ON DELAY timing function starts. At the completion of the set timing period, timer and series wired load will both be energized.

Table 16-28. Mounted Timer Product Selection

Timing Range	Catalog Number ①②③
.1 – 1.0 Seconds	**C320TDN1_**
1 – 30 Seconds	**C320TDN30_**
30 – 300 Seconds	**C320TDN300_**
5 – 30 Minutes	**C320TDN2000_**

① Add operating voltage Suffix to Catalog Number. **A** = 120V, **B** = 240V, **E** = 208V
② Rated .5 ampere pilot duty – not to be used on larger contactors.
③ Terminal connections are quick connects only. Two per side.

Shorting Bar Kits

These kits provide phase-to-phase power connections of contactors for field assembly. The kits include bus connections and mounting hardware. The shorting bars connect all three phases of a single contactor.

Table 16-29. Product Selection

Description	Catalog Number
NEMA Size 3	**C321SB18**
NEMA Size 4	**C321SB19**
NEMA Size 5	**C321SB21**
NEMA Size 6	**C321SB22**

Pneumatic Timers — Top Mounted

Attachment mounts on top of any NEMA Size 00 – 2 Freedom Series starter or contactor (top mounted auxiliary contacts can not be installed on device when timer is used). Timer unit has 1NO-1NC isolated timed contacts — circuits in each pole must be the same polarity. Units are convertible from OFF to ON DELAY or vice-versa.

Table 16-30. Product Selection

Timing Range	Catalog Number
.1 to 30 Seconds	**C320TP1**
10 to 180 Seconds	**C320TP2**

Table 16-31. Maximum Ampere Ratings

Description	Volts AC			
	120	240	480	600
Make	30	15	7.5	6
Break	3	1.5	.75	.6

Locking Cover for Overload Relay — C306 Only

Snap-on transparent or opaque plastic panel for covering access port to the overload relay trip setting dial — helps prevent accidental or unauthorized changes to trip and reset setting.

Table 16-32. Product Selection

	Description	Minimum Ordering Qty. (Std. Pkg.)	Catalog Number
	Clear cover, no accessibility	50	**C320PC3**
	Gray cover, no accessibility, with Auto only nib	50	**C320PC4**
	Gray cover, no accessibility, with Manual only nib	50	**C320PC5**
	Gray cover with FLA dial accessibility, A, B, C, D positions an Auto only nib	50	**C320PC6**
	Gray cover with FLA dial accessibility, A, B, C, D positions and Manual only nib	50	**C320PC7**

Control Circuit Fuse Block

These panel mounted fuse holders, designed for control circuit protection or other similar low current requirements, have extractor type fuse caps. The Class CC rejection type fuses (KTK-R) used in these holders are intended for use with equipment designated as being suitable for use on systems having high available fault currents. If branch circuit protective device is 45A or greater, C320FBR fuse kit may be required for control circuit protection per NEC 430-72.

Table 16-33. Product Selection

Type	Max. Amperes	Catalog Number
Fuse Holder Only	15 30	**C320FB** ④ **C320FBR** ⑤

④ A fuse is not supplied, but holder will accept a Bussman Type KTK or KTK-R (13/32" x 1-1/2") fuse, 600V maximum.
⑤ Includes a 5A, 600V KTK-R fuse.

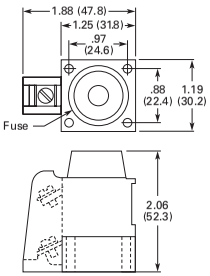

Figure 16-7. Approximate Dimensions in Inches (mm)

Finger Protection Shields

Snap-on shields for both contactors and starters provide Type IP20 Finger Protection. Prevents accidental contact with line/load terminals.

Table 16-34. Product Selection

Application	Catalog Number
NEMA Size 00 NEMA Size 0	C320LS1 C320LS2
NEMA Sizes 1 – 2 Contactors Reversing Contactors	 C320LS3 C320LS4
NEMA Size 1 Starters Reversing Starters	 C320LS5 C320LS6
NEMA Size 2 Starters Reversing Starters	 C320LS7 C320LS8

Adapter to DIN Rail Mount

NEMA 1 – 2 Contactors

Designed to allow DIN rail mounting of NEMA 1 – 2 contactors. Includes all hardware required to convert contactors from panel mounting to 35 mm DIN rail mounting.

Table 16-35. Product Selection

Description	Catalog Number
Adapter to DIN Rail Mount	C320DN65

Transient Suppressor Kits

NEMA Sizes 00 – 2

Cat. No. C320TS2

These kits limit high voltage transients produced in the control circuit when power is removed from the contactor or starter coil. There are three separate suppressors for use on 24 – 120V, 208 – 240V or 277 – 480V coils respectively.

These devices mount directly to the coil terminals of Freedom Series contactors or starters NEMA Sizes 00 – 2 and lighting contactors 10 – 60A. Reversing devices will require two.

Table 16-36. Product Selection

Description	Coil Voltage 50/60 Hz ①	Catalog Number
Transient Suppressor	24 – 120V 208 – 240V 277 – 480V	C320TS1 C320TS2 C320TS3

① Suppressor is compatible with coil voltages/ranges as shown, 50 and 60 Hz.

NEMA Sizes 3 – 5

This device mounts on top of any side mounted auxiliary contact on Freedom Series NEMA Sizes 3 – 5 and lighting contactors 100 – 300A. It connects across coil terminals on any 120V contactor or starter magnet coil (reversing starters or contactors require 2).

Limits high voltage transients produced in the circuit when power is removed from the coil.

Table 16-37. Product Selection

Description	Coil Voltage	Catalog Number
Transient Suppressor	120V	C320AS1

DC/AC Interface Module

Cat. No. C320DC

The Catalog Number C320DC Interface Module is an optically isolated solid-state switch which provides a means of operating AC coils with 5 – 48V DC control signal. It acts as a space saving interposing relay which can switch a specified 50/60 Hz AC source to the contactor or starter coil.

The module may be directly attached to the coil terminals of any Freedom Series contactor or starter — NEMA Sizes 00 – 3 and lighting contactors 10 – 100A. It also has provisions for DIN rail mounting.

The module will operate coils within the voltage ranges shown in **Table 16-38**.

Design Characteristics

- DC Input: 5 – 48V DC at mA nominal
- AC Operating Voltage: 240V AC (360 VA) ±10% 50/60 Hz;
- DC Operating Voltage: 30V DC max. (.5A)
- AC Current Rating
  - 10A make (inrush)
  - 1A break (sealed)

Table 16-38. Controller Coil Voltage Ranges

Controller Catalog Number Prefix	Controller Size or Rating	Coil Range Volts AC
AN16, AN56, CN15, CN55	00 – 0 1 – 2 3	24 _ 240 48 – 240 110 – 240
CN35	10 – 30A 60A 100A	24 – 240 48 – 240 110 – 240

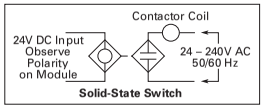

Figure 16-8. Typical Application

Table 16-39. Product Selection

Coil Voltage	Catalog Number
5V DC 6V DC 9V DC	C320DC2V5 C320DC2V6 C320DC2V9
12V DC 48V DC	C320DC2V12 C320DC2V48

Adhesive Dust Cover

NEMA Sizes 00 – 2

These adhesive stickers come 25 to a package and provide extra protection from contaminants when applied to the sides of Freedom NEMA Sizes 00 – 2. Adhesive covers are easily applied to side opening where auxiliaries are not installed and provide extra protection from metal filings and other debris.

Table 16-40. Product Selection

Description	Catalog Number
25 to a package	C320DSTCVR

Add-On Power Pole Kit

NEMA Sizes 00 – 2

This device mounts on the side of Freedom NEMA Size 00 – 2 contactors. One unit can be mounted on each side and carries UL, cUL and IEC ratings. The device is rated for resistive, inductive and lighting applications.

Table 16-41. Product Selection — Add-On Power Pole Kit

UL Ampere Rating						IEC 947 Ampere Rating			1NO Power Pole Catalog Number
Inductive 600V	Resistive 600V	hp 1-Phase 115V	hp 1-Phase 230V	Locked Rotor 240V	Lighting Ballast Tungsten 480V	AC-1 600V	AC-3 600V	AC-5a AC-5b 480V	
15	20	1/2	2	96	20	20	12	18	C320PPD10

Fuse Clips

C351 Fuse Clip Kit

Table 16-42. C351 — Fuse Clip Selection — 3 Poles

Starter Size	Motor Voltage	Maximum hp (3-Phase) Dual Element Fuses	Fuse Clip Rating Amperes	Fuse Clip Rating Volts	Fuse Clip Kit for Field Installation in Non-fusible Starter: For Non-rejection Type Fuses Catalog Number	Fuse Clip Kit for Field Installation in Non-fusible Starter: For use w/ "R" Rejection Type Fuses Catalog Number	Fuse Clip Kit Factory Installed Position 10 Alpha ②
Non-fusible — without Fuse Clips Installed							A
0	200/230 460/575	3 5	30 30	250 600	C351KC21 C351KD22-61	C351KC21R C351KD22-61R	B C
1	200/230 460/575	7-1/2 10	30 30	250 600	C351KC21 C351KD22-61	C351KC21R C351KD22-61R	B C
2	200 230 460/575	10 15 25	60 60 60	250 250 600	C351KD22-61 C351KD22-61 C351KD62	C351KD22-61R C351KD22-61R C351KD62R	D D E
3	200 230 460/575	25 30 50	100 100 100	250 250 600	C351KE23-63 ① C351KE23-63 ① C351KE23-63 ①	C351KE23-63 ① C351KE23-63 ① C351KE23-63 ①	F F G
4	200 230 460/575	40 50 100	200 200 200	250 250 600	C351KF24-64 ① C351KF24-64 ① C351KF24-64 ①	C351KF24-64 ① C351KF24-64 ① C351KF24-64 ①	H H J
5	200 230 460/575	75 100 200	400 400 400	250 250 600	Not Available in Kit Form	Not Available in Kit Form	K K L

① Fuse clip "R" rejection members for use with Class R fuses are supplied loose in the Fuse Clip Kits.
② These fuse clips are for Class R fuses.

Note: Kits do not include fuses.

Control Power Transformer Kits

Control Transformer Kit

These control transformer kits provide a convenient on-the-job addition of control transformers to the following Type 1, 3R, 4/4X and 12 enclosed starters. Adding or changing these kits does not affect the UL listing in most instances.

The transformer kit consists of:

- Control transformer
- Two primary and one secondary fuse
- Wires
- Mounting instruction publication

For Non-combination Starters

These kits may be used for transformer voltage conversion on Freedom NEMA starters furnished from the factory with control transformers installed. Non-combination starters with CPTs factory installed are Class ECN07, ECA07, ECE07 and ECE11. These kits may also be installed in oversize enclosures that have been designed to accept transformers.

Combination Starters

Most combination starters have space for standard size (and 100 VA extra capacity) control power transformers. The panels are pre-drilled for mounting.

UL/CSA

UL Listed — File Number E10156, Guide XPTO.

Table 16-43. Standard Transformer Sizes ①

Size	VA Capacity		
	Freedom	Vacuum	Advantage
0	50	—	—
1, 2	100	—	100
3	150	—	100
4	200	100	100
5	200	150	250
6	250	350	250

① Non-reversing, single contactor only.

When Ordering Specify

- Catalog Number

Table 16-44. Control Transformer Kits

Continuous VA	Primary 208/277V Secondary 120V, 60 Hz	Primary 240/480V, 60 Hz 220/440V, 50 Hz Secondary 120V, 60 Hz 110V, 50 Hz	Primary 380V Secondary 110V, 50 Hz	Primary 600V, 60 Hz 550V, 50 Hz Secondary 120V, 60 Hz 110V, 50 Hz	Primary 240/480V Secondary 24V, 60 Hz
	Catalog Number	Catalog Number	Catalog Number	Catalog Number	Catalog Number
50	**C341AE**	**C341AC**	**C341AL**	**C341AD**	**C341AS**
75	**C341BE**	**C341BC**	**C341BL**	**C341BD**	**C341BS**
100	**C341CE**	**C341CC**	**C341CL**	**C341CD**	**C341CS**
150	**C341DE**	**C341DC**	**C341DL**	**C341DD**	**C341DS**
200	**C341EE**	**C341EC**	**C341EL**	**C341ED**	**C341ES**
250	**C341FE**	**C341FC**	**C341FL**	**C341FD**	**C341FS**
300	**C341GE**	**C341GC**	**C341GL**	**C341GD**	**C341GS**
350	**C341HE**	**C341HC**	**C341HL**	**C341HD**	**C341HS**
500	**C341JE**	**C341JC**	**C341JL**	**C341JD**	**C341JS**

Table 16-45. Approximate Dimensions and Shipping Weights

Continuous VA	Dimensions in Inches (mm)						Ship Wt. Lbs. (kg)
	Wide A	High B	Deep C	Mounting D	Mounting E	Mounting Slots	
50	3.00 (76.2)	3.00 (76.2)	2.56 (65.0)	2.00 (50.8)	2.50 (63.5)	.203 x .375 (5.2 x 9.5)	3.0 (1.4)
75	3.50 (88.9)	3.00 (76.2)	2.56 (65.0)	2.50 (63.5)	2.50 (63.5)	.203 x .375 (5.2 x 9.5)	4.3 (2.0)
100	3.38 (85.9)	3.38 (85.9)	2.88 (73.2)	2.38 (60.5)	2.81 (71.4)	.203 x .375 (5.2 x 9.5)	4.6 (2.1)
150	4.00 (101.6)	3.75 (95.3)	3.18 (80.8)	2.88 (73.2)	3.12 (79.2)	.203 x .375 (5.2 x 9.5)	7.0 (3.2)
200	4.00 (101.6)	4.50 (114.3)	3.81 (96.8)	2.50 (63.5)	3.75 (95.3)	.203 x .375 (5.2 x 9.5)	7.7 (3.5)
250	4.38 (111.3)	4.50 (114.3)	3.81 (96.8)	2.88 (73.2)	3.75 (95.3)	.203 x .375 (5.2 x 9.5)	10.0 (4.5)
300	4.75 (120.7)	4.50 (114.3)	3.81 (96.8)	3.25 (82.6)	3.75 (95.3)	.203 x .375 (5.2 x 9.5)	13.0 (5.9)
350	5.25 (133.4)	4.50 (114.3)	3.81 (96.8)	3.75 (95.3)	3.75 (95.3)	.203 x .375 (5.2 x 9.5)	14.0 (6.4)
500	5.50 (139.7)	5.25 (133.4)	4.75 (120.7)	4.25 (108.0)	4.38 (111.3)	.312 x .688 (7.9 x 17.5)	18.0 (8.2)

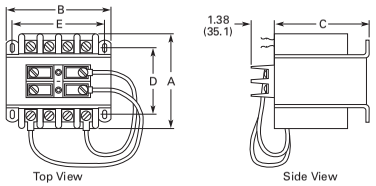

Figure 16-9. Open Type — 50 VA – 500 VA with Fuse Block

DeviceNet™ Communications Module

DeviceNet Module

The DeviceNet Communications module (Catalog Number WPONIDNA) is designed to plug into the Advantage with the attached cable and plug. The module can be snapped onto the top or bottom of the Advantage unit. It can also be mounted separately using the mounting plate assembly (Catalog Number WPONIBASE). The module provides DeviceNet users with the ability to control and monitor the functions of the Advantage system at 125, 250 or 500 kbaud. A connector is provided so that a HAND/OFF/AUTO hard contact may be used to selectively enable or disable the output of the control functions from the module without affecting its ability to monitor. A "Feedback" input is provided so that the state of an auxiliary contact may be read over the DeviceNet network.

Three bicolor LEDs indicate:

- DeviceNet address
- Network status (including connected, not connected, not powered)
- Module status (including normal operation, minor fault, needs commissioning)

Table 16-46. DeviceNet Interface

Description	Catalog Number
DeviceNet Interface Module	**WPONIDNA**
Mounting Plate Assembly	**WPONIBASE**

Note: See *Cutler-Hammer Control Catalog* for WPONI Network Interface.

Type W Auxiliary Contact Modules

- Provides four separate contact sets which wire vertically and are color coded; black designates NC and silver designated NO.
- Up to two auxiliary contact modules can be mounted for a total of up to eight contact sets.
- Provides circuit isolation (no polarity restrictions) and single break bifurcated contacts.
- Common design fits all Sizes 1 – 6.

Table 16-47. Ratings

Voltage	Make	Break
NEMA A600 — 120 – 600V AC	7200 VA	720 VA
NEMA Q300 — 125 – 300V DC	69 VA	69 VA

Table 16-48. Auxiliary Contact Modules

Description	Catalog Number
2NO, 2NC	**W22**
3NO, 1NC	**W31**
4NO	**W40**
4NC	**W04**
1NO, 3NC	**W13**
1NO, 1NC and 2 Tie Points	**W11T**

Bell Alarm Module

Bell Alarm Module

- Simple snap-on mounting
- Isolated NO and NC contacts (1 each)
- Plugs into Reset port
- Remote electrical Reset wired to Catalog Number WBELL module

Table 16-49. Ratings

Form C Contact Ratings Maximum Amperes — 120V AC		Catalog Number
Make	Break	
2880 VA	480 VA	**WBELL**
Continuous Current Rating: 5A		

Transformer Pilot Light Kits

Table 16-50. Transformer Pilot Light Kits

Voltage	Color	Legend Plate	Catalog Number	Replacement Part
120	Red	RUN	**PLK1R**	**99-3590-1**
240	Red	RUN	**PLK2R**	**99-3590-3**
480	Red	RUN	**PLK4R**	**99-3590-6**
600	Green	OFF	**PLK1G**	**99-3590-8**

OL Selection DIP Switch Window

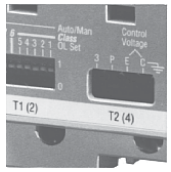

DIP Switch Window

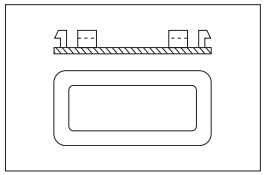

Figure 16-10. DIP Switch Window

- Simple snap-in installation
- Allows clear visibility of DIP switches
- Prevents unwanted tampering of DIP switch settings
- Once in must be pried out from rear
- One window supplied with each starter

Table 16-51. DIP Switch Window

Description	Catalog Number
DIP Switch Window, (Must order in packages of 10)	WDIPSW10

DIN Rail Adapter Kit

- Provides snap-on mounting on 35 mm DIN rail
- For use with Sizes 1 and 2 non-reversing contactors and starters

Table 16-52. DIN Rail Adapter Kit

Description	Catalog Number
DIN Rail Adapter Kit	WDIN

Internal Trip Indicator

Internal Trip Indicator

- Overload condition indication — indicated by blinking light
- Trip condition — indicated by solid light

Table 16-53. Trip Indicator

Description	Catalog Number
Internal Trip Indicator	WLED

Competitive Baseplate Kit

- Allows for direct retrofit of competitive non-reversing starters
- Eliminates the need for re-drilling and tapping of mounting holes
- Simple selection of competitive footprints

Table 16-54. Baseplate Kit

Description	Catalog Number
Sizes 1 and 2 Sizes 3 and 4	WBASE12 WBASE34

Remote Reset and Trip Indicator Pushbutton

FWD/REV/OFF/AUTO Control

- OL condition indication
- Trip indication — OL phase-loss/ unbalance and ground fault
- OL reset capability
- 10250T — for 30 mm mounting
- NEMA 4 oiltight rated
- Mount remotely up to 6 ft. away
- Unit completely assembled including legend plate
- Available also in reset-only form — no trip indication provided

Table 16-55. Remote Pushbuttons

Description	Catalog Number
Reset with Trip Indication 2 ft. Cable 6 ft. Cable 15 ft. Cable	 WRSTL24 WRSTL72 WRSTL180
Reset Only 2 ft. Cable 6 ft. Cable 15 ft. Cable	 WRST24 WRST72 WRST180
Conversion Kit Reset Only to Reset with Trip Indication	WRLTT
6 ft. Cable Only 15 ft. Cable Only LED Replacement Bulb	WRC72 WRC180 WRLT

16

16

Full Voltage Pushbutton Control Module

Metering Module

Eaton's Cutler-Hammer® Advantage Control Modules (ACMs) provide a cost-effective alternative to push-buttons, selector switches, indicating lights, reset mechanisms, bell alarms and panel meters when used with the Advantage product line. Typical input/ output control functions provided by panel mounted devices are conveniently packaged in a series of modules depending on application and complexity.

Sixteen styles cover applications ranging from:

- Full voltage non-reversing
- Full voltage reversing
- Full voltage multispeed
- Reduced voltage
- DeviceNet compatible

Modules exist for each application to provide the functions of:

- Status only
  - Indicating lights
  - Reset
- Status, START/STOP and RESET
- Status, HOA and RESET
- Status, START/STOP/HOA and RESET

An additional Metering Module replaces conventional ammeters (three-phase), replaces reset mechanisms and displays trip cause and data, control voltage and status.

This Metering Module can be used independently or in conjunction with any of the ACMs. An extra plug connection is available on the rear of each ACM to accept the Metering Module input.

The ACM family has been designed to save:

- Panel space (versus conventional pushbuttons, selector switches and indicating lights)
- Mounting and assembly labor
- Wiring and installation time

Regardless of the configuration, installation requires mounting only one 2.25 x 3.5 inch module, substantially reducing space requirements. Fitting a standard Greenlee punch and die set, Greenlee #60071, installation is accomplished with only two screws.

ACMs provide savings in wiring costs as well. Regardless of the complexity of the application, wiring is reduced to a single plug-in cable, see photo at left.

Communication is not restricted by use of the Advantage Control Modules. An extra plug connection is available on the rear of the ACM or Metering Module to allow a WPONIDNA or WPONI Communications module to be plugged in.

Full Voltage and Reduced Voltage Control Modules

Status Only

- 4 LEDs indicate that the motor is OFF, Running, Tripped or in Alarm mode (motor current is above the trip current setting)
- Includes RESET button

START/STOP

- Motor START/STOP controlled by START and STOP buttons
- Includes all features of Status Only module

HOA Selector Switch with START/STOP

- In HAND mode, motor will start and stop in response to START/STOP pushbuttons
- In AUTO mode, motor will run in response to remote signal
- Includes all features of Status Only module

ON/OFF/AUTO Selector Switch

- Motor will run in ON mode and not in the OFF mode
- In AUTO mode the motor will run in response to a remote signal
- Includes all features of Status Only module

Reduced Voltage Control Modules

The four reduced voltage pushbutton control modules provide control using two to four starters and/or contactors. The faceplates are identical to the full voltage modules, and the pushbuttons all perform the same functions. The module is programmed for the type of reduced voltage starter which sets the sequence of contact open and closing.

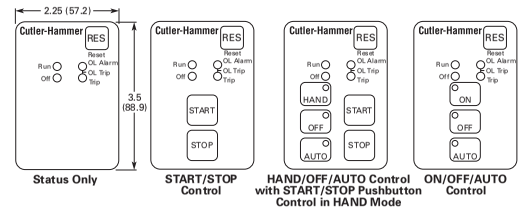

Figure 16-11. Full Voltage and Reduced Voltage Control Modules

Reversing and 2-Speed Pushbutton Modules

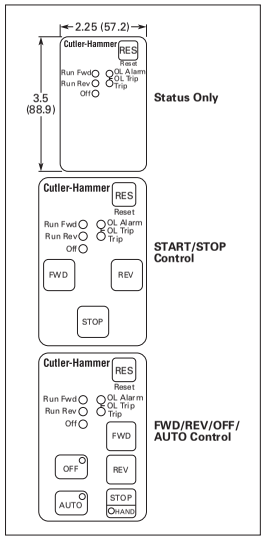

Figure 16-12. Reversing and 2-Speed Pushbutton Module

ACM Specifications

- Input supply requirements: 120V AC (supplied by the Advantage motor controller)
- Max. distance from Advantage motor controller: 6 ft. (1.83m)
- Operating frequency: 50 or 60 Hz
- Operating temperature: -20° to 70°C
- Storage temperature: -20° to 85°C
- Humidity: 0 to 95%, non-condensing
- Remote input wire size: 18 – 14 AWG
- Maximum distance between remote pushbuttons and ACM: 200 ft. (60.9m)
- Cutout dimensions: 2.25 x 3.5 inches (57.2 x 88.9 mm) (see above). The cutout can be made using a Greenlee rectangular punch #600710
- Enclosure type: Type 1 or 12, when properly installed

Status Only

- 5 LEDs which indicate that the motor is OFF, running forward (FAST), running reverse (SLOW), tripped or in alarm mode
- Includes RESET button

FORWARD (FAST)/REVERSE (SLOW)/STOP

- Pushbuttons control whether motor is running forward (FAST), running reverse (SLOW) or stopped
- Includes all features of Status Only module

FWD/REV/OFF/AUTO

- In AUTO mode, motor is running forward (FAST), running reverse (SLOW) or OFF in response to a remote signal
- All features of FORWARD/REVERSE/ STOP module

Note: For 2-speed modules, FAST replaces FWD and SLOW replaces REV.

Metering Module

The Advantage Metering Module monitors status of a motor along with any of the pushbutton modules. It may be plugged into the pushbutton control module, and communicates to the starter through it, or plugged directly into the starter when a pushbutton control module is not used.

The four digit display will show the current in each phase, control voltage or cause of trip. The STEP button may be pressed to step through these values, and the five LEDs will indicate which value is being displayed. It is also equipped with a reset button and Trip Lockout LED.

Table 16-56. Control Modules/Accessories

Description	Catalog Number
Full Voltage	
Status Only with Reset	**WPBFV1**
START/STOP	**WPBFV2**
START/STOP/HOA	**WPBFV3**
ON/OFF/AUTO	**WPBFV4**
LOCAL/OFF/REMOTE with Lockable ACM ①	**WPBFV5** ①
LOCAL/OFF/REMOTE with Network Health ①	**WPBFV7** ①
Reversing	
Status Only with Reset	**WPBR1**
FWD/REV/STOP	**WPBR2**
FWD/REV/STOP/HOA	**WPBR3**
2-Speed	
Status Only with Reset	**WPB2S1**
FAST/SLOW/STOP	**WPB2S2**
FAST/SLOW/STOP/HOA	**WPB2S3**
Reduced Voltage	
Status Only with Reset	**WPBRV1**
START/STOP	**WPBRV2**
START/STOP/HOA	**WPBRV3**
ON/OFF/AUTO	**WPBRV4**
Metering Module	**WMETER**
10 ft. Interconnect Cable (3m)	**WACM10**
6 ft. Interconnect Cable (1.8m)	**WACM6**
3 ft. Interconnect Cable (.9m)	**WACM3**
1 ft. Interconnect Jumper (.3m)	**WACM1**

① The WPBFV5 and WPBFV7 are DeviceNet® only. They can only be used when an active network is connected.

A200 NEMA

Factory Modifications

Table 16-57. A200 Factory Modifications

Modifications	Description	Catalog Number Suffix	NEMA Size 00 – 1	2	3	4	5	6	7	8	9
Control Circuit	1 Extra Auxiliary Contact (1NO-1NC) Non-reversing, Reversing, 2-Speed Unwired	**J1**	✔ ✔	✔ ✔	✔ ✔	✔ ✔	✔ ✔	✔ ✔	✔ ✔	✔ ✔	✔ ✔
	2 Extra Auxiliary Contact Non-reversing, Reversing, 2-Speed Unwired	**J2**	✔ ✔	✔ ✔	✔ ✔	✔ ✔	✔ ✔	✔ ✔	✔ ✔	✔ ✔	✔ ✔
	3 Extra Auxiliary Contact Non-reversing, Unwired	**J3**	✔	✔	✔	✔					
	4 Extra Auxiliary Contact Non-reversing, Unwired	**J4**	✔	✔	✔	✔					
	Wired for Separate Control (NC)	**C**									
	Omit Control Wiring (NC)	**X**	✔	✔	✔	✔	✔	✔	✔	✔	✔
Overload Relays (Substitutions)	Ambient Compensated with Auto Reset (NC)	**D**									
	Fast Trip — Ambient Compensated (Specify Motor FLA)	**D7**	✔	✔	✔	✔	✔	✔			
	Overload Relay Alarm Contact (NO) per overload	**E**	✔	✔	✔	✔	✔	✔			

Type J Auxiliary Contact

Type J Auxiliary Contact

- Capable of being field mounted in a contactor or starter (Classes A200, A900 Sizes 00 – 6, V200, V201 vacuum and definite purpose controllers).
- Provides two separate electrical contact sets which wire vertically and are color coded; black designates NC and silver designates NO. Please note that the vertical wiring is contrary to the horizontal wiring of the L-56 auxiliary contacts.
- Designed to fit within dimensions of starter; no additional panel space is required.
- Provides circuit isolation (no polarity restrictions) and single break bifurcated contacts.

Table 16-58. Auxiliary Contact Ratings

Voltage	Make	Break
NEMA A600		
120 – 600V AC	7200 VA	720 VA
72 – 120V AC	60A	720 VA
28 – 72V AC	60 VA	10A
NEMA R300		
28 – 300V DC	28 VA	28 VA

Table 16-59. Auxiliary Contact Types

Contact Type	Max.	Catalog Number
1NO and 1NC	4	**J11**
2NC	4	**J02**
2NO	4	**J20**
1 Coil Clearing NC and 1NO	4	**J1C**

Heater Selection

General Information on Heater Coil Selection

For maximum motor protection and compliance with Article 430-32 of the National Electrical Code, select heater coils from the tables in this section on the basis of motor name-plate full load current.

When the full load current is unknown, selection may be made on the basis of average full load currents.
Caution — The average ratings could be high or low for a specific motor and therefore selection on this basis always involves risk. For fully reliable motor protection, select heater coils on the basis of full load current rating as shown on the motor nameplate.

Heater coils are rated to protect 40°C rise motors, and open and drip-proof motors having a **service factor of 1.15** where the motor and the controller are at the same ambient temperature.

For other conditions:

1. For 50°C, 55°C, 75°C rise motors and **enclosed motors having a service factor of 1.0, select one size smaller coil.**
2. Ambient temperature of controller lower than motor by 26°C (47°F), use one size smaller coil.
3. Ambient temperature of controller higher than motor by 26°C (47°F), use one size larger coil.

Ultimate tripping current of heater coils is approximately 1.25 times the minimum current rating listed in the tables.

Table 16-60. Heater Selection — Type A and B Overload Relays, Sizes 3 and 4

Size Starter	Ambient Compensated Enclosed Starters	Non-compensating Enclosed Starters	Heater (One Heater per Catalog Number)
	All Applications		Catalog Number
	Full Load Current of Motor Amps		
For Size 4 Starters / For Size 3 Starters	12.8 – 14.1	11.9 – 13.0	**FH68**
	14.2 – 15.5	13.1 – 14.3	**FH69**
	15.6 – 17.1	14.4 – 15.9	**FH70**
	17.2 – 18.9	16.0 – 17.4	**FH71**
	19.0 – 20.8	17.5 – 19.1	**FH72**
	20.9 – 22.9	19.2 – 21.1	**FH73**
	23.0 – 25.2	21.2 – 23.2	**FH74**
	25.3 – 27.8	23.3 – 25.6	**FH75**
	27.9 – 30.6	25.7 – 28.1	**FH76**
	30.7 – 33.5	28.2 – 30.8	**FH77**
	33.6 – 37.5	30.9 – 34.5	**FH78**
	37.6 – 41.5	34.6 – 38.2	**FH79**
	41.6 – 56.3	38.3 – 42.6	**FH80**
	46.4 – 50	42.7 – 46	**FH81**
	51 – 55	47 – 51	**FH82**
	56 – 61	52 – 56	**FH83**
	62 – 66	57 – 61	**FH84**
	67 – 73	62 – 67	**FH85**
	74 – 78	68 – 72	**FH86**
	79 – 84	73 – 77	**FH87**
	85 – 92	78 – 84	**FH88**
	93 – 101	85 – 91	**FH89**
	102 – 110	92 – 99	**FH90**
	111 – 122	100 – 110	**FH91**
	123 – 129	111 – 122	**FH92**
	130 – 133	123 – 128	**FH93**
	—	129 – 133	**FH94**

Table 16-61. Heater Selection — Type A and B Overload Relays, Sizes 5 and 6

Compensated Overload Relay		Heater (One Heater per Catalog Number)
Open Starter	Enclosed Starter	Catalog Number
Full Load Current of Motor (Amps)		
Size 5 (with 300/5 Current Transformers)		
—	—	**FH23**
118 – 129	118 – 129	**FH24**
130 – 141	130 – 141	**FH25**
142 – 155	142 – 155	**FH26**
156 – 170	156 – 170	**FH27**
171 – 187	171 – 187	**FH28**
188 – 205	188 – 205	**FH29**
206 – 224	206 – 224	**FH30**
225 – 244	225 – 244	**FH31**
245 – 263	245 – 263	**FH32**
264 – 292	264 – 292	**FH33**
293 – 300	—	**FH34**
Size 6 (with 600/5 Current Transformers)		
—	—	**FH23**
236 – 259	236 – 259	**FH24**
260 – 283	260 – 283	**FH25**
284 – 310	284 – 310	**FH26**
311 – 340	311 – 340	**FH27**
341 – 374	341 – 374	**FH28**
375 – 411	375 – 411	**FH29**
412 – 448	412 – 448	**FH30**
449 – 489	449 – 489	**FH31**
490 – 527	490 – 527	**FH32**
528 – 585	528 – 540	**FH33**
586 – 600	—	**FH34**

Note: Size 7 and Larger — Advise Full Load Current.

Table 16-62. Heater Selection — Type A and B Overload Relays, Sizes 0, 1 and 2

Size Starter	Non-compensated Open Starters and Ambient Comp. Open and Enclosed Starters		Heater (One Heater per Catalog Number)	Non-compensating Enclosed Starters		Heater
	Block Type Overload Using 3 Heaters	Single-Pole Type Overload	Catalog Number	Block Type Overload Using 3 Heaters	Single-Pole Type Overload	Catalog Number
	Full Load Current of Motor (Amps)					
For Size 2 Starters / For Size 1 Starters / For Size 0 Starters	.25 – .27	.29 – .31	**FH03**	.24 – .25	.28 – .30	**FH03**
	.28 – .31	.32 – .35	**FH04**	.26 – .28	.31 – .34	**FH04**
	.32 – .34	.36 – .39	**FH05**	.29 – .31	.35 – .37	**FH05**
	.35 – .38	.40 – .43	**FH06**	.32 – .35	.38 – .42	**FH06**
	.39 – .42	.44 – .48	**FH07**	.36 – .39	.43 – .47	**FH07**
	.43 – .46	.49 – .53	**FH08**	.40 – .43	.48 – .52	**FH08**
	.47 – .50	.54 – .58	**FH09**	.44 – .47	.53 – .56	**FH09**
	.51 – .55	.59 – .64	**FH10**	.48 – .51	.57 – .63	**FH10**
	.56 – .62	.65 – .71	**FH11**	.52 – .57	.64 – .70	**FH11**
	.63 – .68	.72 – .79	**FH12**	.58 – .63	.71 – .77	**FH12**
	.69 – .75	.80 – .87	**FH13**	.64 – .70	.78 – .85	**FH13**
	.76 – .83	.88 – .96	**FH14**	.71 – .77	.86 – .94	**FH14**
	.84 – .91	.97 – 1.06	**FH15**	.78 – 85	.95 – 1.03	**FH15**
	.92 – 1.00	1.07 – 1.16	**FH16**	.86 – .93	1.04 – 1.13	**FH16**
	1.01 – 1.11	1.17 – 1.28	**FH17**	.94 – 1.03	1.14 – 1.25	**FH17**
	1.12 – 1.22	1.29 – 1.41	**FH18**	1.04 – 1.13	1.26 – 1.38	**FH18**
	1.23 – 1.34	1.42 – 1.55	**FH19**	1.14 – 1.25	1.39 – 1.52	**FH19**
	1.35 – 1.47	1.56 – 1.71	**FH20**	1.26 – 1.37	1.53 – 1.67	**FH20**
	1.48 – 1.62	1.72 – 1.87	**FH21**	1.38 – 1.51	1.68 – 1.83	**FH21**
	1.63 – 1.78	1.88 – 2.06	**FH22**	1.52 – 1.65	1.84 – 2.01	**FH22**
	1.79 – 1.95	2.07 – 2.26	**FH23**	1.66 – 1.81	2.02 – 2.21	**FH23**
	1.96 – 2.15	2.27 – 2.48	**FH24**	1.82 – 1.99	2.22 – 2.43	**FH24**
	2.16 – 2.35	2.49 – 2.72	**FH25**	2.00 – 2.19	2.44 – 2.66	**FH25**
	2.36 – 2.58	2.73 – 2.99	**FH26**	2.20 – 2.39	2.67 – 2.92	**FH26**
	2.59 – 2.83	3.00 – 3.28	**FH27**	2.40 – 2.63	2.93 – 3.21	**FH27**
	2.84 – 3.11	3.29 – 3.60	**FH28**	2.64 – 2.89	3.22 – 3.53	**FH28**
	3.12 – 3.42	3.61 – 3.95	**FH29**	2.90 – 3.17	3.54 – 3.87	**FH29**
	3.43 – 3.73	3.96 – 4.31	**FH30**	3.18 – 3.47	3.88 – 4.22	**FH30**
	3.74 – 4.07	4.32 – 4.71	**FH31**	3.48 – 3.79	4.23 – 4.61	**FH31**
	4.08 – 4.39	4.72 – 5.14	**FH32**	3.80 – 4.11	4.62 – 4.9	**FH32**
	4.40 – 4.87	5.15 – 5.6	**FH33**	4.12 – 4.55	5.0 – 5.5	**FH33**
	4.88 – 5.3	5.7 – 6.2	**FH34**	4.56 – 5.0	5.6 – 6.0	**FH34**
	5.4 – 5.9	6.3 – 6.8	**FH35**	5.1 – 5.5	6.1 – 6.6	**FH35**
	6.0 – 6.4	6.9 – 7.5	**FH36**	5.6 – 5.9	6.7 – 7.3	**FH36**
	6.5 – 7.1	7.6 – 8.2	**FH37**	6.0 – 6.6	7.4 – 8.0	**FH37**
	7.2 – .78	8.3 – 9.0	**FH38**	6.7 – 7.2	8.1 – 8.7	**FH38**
	7.9 – 8.5	9.1 – 9.9	**FH39**	7.3 – 7.9	8.8 – 9.7	**FH39**
	8.6 – 9.4	10.0 – 10.8	**FH40**	8.0 – 8.7	9.8 – 10.5	**FH40**
	9.5 – 10.3	10.9 – 11.9	**FH41**	8.8 – 9.5	10.6 – 11.7	**FH41**
	10.4 – 11.3	12.0 – 13.1	**FH42**	9.6 – 10.5	11.8 – 12.7	**FH42**
	11.4 – 12.4	13.2 – 14.3	**FH43**	10.6 – 11.5	12.8 – 14.0	**FH43**
	12.5 – 13.5	14.4 – 15.7	**FH44**	11.6 – 12.6	14.1 – 15.3	**FH44**
	13.6 – 14.9	15.8 – 17.2	**FH45**	12.7 – 13.8	15.4 – 16.6	**FH45**
	15.0 – 16.3	17.3 – 18.9	**FH46**	13.9 – 15.1	16.7 – 18.3	**FH46**
	16.4 – 18.0	19.0 – 20.8	**FH47**	15.2 – 16.7	18.4 – 20.0	**FH47**
	18.1 – 19.8	20.9 – 22.9	**FH48**	16.8 – 18.3	20.1 – 21.9	**FH48**
	19.9 – 21.7	23.0 – 25.2	**FH49**	18.4 – 20.2	22.0 – 23.9	**FH49**
	21.8 – 23.9	25.3 – 27.6	**FH50**	20.3 – 22.2	24.0 – 26.2	**FH50**
	24.0 – 26.2	27.7 – 30.3	**FH51**	22.3 – 24.3	26.3 – 28.8	**FH51**
	26.3 – 28.7	30.4 – 33.3	**FH52**	24.4 – 26.6	28.9 – 31.4	**FH52**
	28.8 – 31.4	33.4 – 36.4	**FH53**	26.7 – 29.1	31.5 – 34.5	**FH53**
	31.5 – 34.5	36.5 – 39.9	**FH54**	29.2 – 32.0	34.6 – 37.9	**FH54**
	34.6 – 37.9	40.0 – 43.9	**FH55**	32.1 – 35.2	3.80 – 41.9	**FH55**
	38.0 – 41.5		**FH56**	35.3 – 38.5	42.0 – 45.0	**FH56**
	41.6 – 45.0		**FH57**	38.6 – 42.3		**FH57**

SS-56 Surge Suppressor

SS-56 Surge Suppressor

- Designed to be used with magnetic motor controllers through Size 4 in 120V, 60 Hz control circuit applications where electronic equipment is used.
- Steady State Coil Volts: 120, 60 Hz, RMS
- Peak Input Volts: 169.6, 60 Hz, Max. Amplitude
- Max. Ambient Temperature: 65°C
- Nominal Limiting Volts: 270 Peak
- Nominal Rate of Volt Rise: .5 per mS

Table 16-63. Surge Suppressor ①

Type Mounting	Kit Catalog Number
Starter	**SS-56**

① Can be used on Sizes 5 and 6 with 120V coil. Mounting bracket required — order separately. Mounting Bracket 177C043G04.

Mechanical Interlock

- Prevents closing of one member of a reversing or multi-speed contactor until the opposite member is completely open.
- Lever type mechanism assures positive action.
- Can be factory assembled or field mounted on A200 and A900 starters and contactors.

Table 16-66. Mechanical Interlock

Contactor Arrangement (Number of Poles, Horizontal or Vertical)	Continuous Size	Interlock Catalog Number
3 x 3 Horizontal 4 x 4 Horizontal 5 x 3 Horizontal	0, 1 0, 1 0, 1	**M-33-1B** **M-33-1B** **M-33-1B**
All Pole Combination, Vertical 3 x 3 Horizontal Reversing 3 x 3 Vertical Reversing	0, 1 2 2	**M-34-1A** **M-33-2B** **M-34-2A**
5 x 3 Horizontal 4 x 4 Horizontal	2 2	**M-35-2A** **M-36-2A**
All Pole Combination Horizontal All Pole Combination Vertical	3, 4 3, 4	**M-33-3B** **M-34-3**

F-56 Fuse Block

- Facilitates installation of fuses (15A, 600V max.) in control circuits.
- Utilizes Bussman type KTK fuses, or equivalent.
- Mounts in same cavity as Type J auxiliary contact.
- No tools or mounting hardware needed.
- Fuse not included.

Table 16-64. Fuse Block

Mounting	Kit Catalog Number
Starter Panel	**F56** **F56-P**

R-56 Interposing Relay

The R-56AA interposing relay is a low energy solid-state device with a single NO solid-state contact. It can be used as a 120V AC control relay, and will operate on as little as 40V AC input. Is useful in applications requiring long control wiring runs where excessive voltage drop would prevent the contactor or relay from energizing. Will operate a Size 4 contactor from 10,000 feet using 18 AWG wire.

Table 16-65. Interposing Relay

Type Mounting	Kit Catalog Number
Starter or Panel	**R56-AA**

B3NO Bell Alarm Contact

- Isolated Normally Open Bell Alarm Contact.
- Mounts in Type B block-type overload relay.

Table 16-67. Bell Alarm Contact

Kit Catalog Number
B3NO-2 **B3NO-4 ②**

② For Size 3 and 4.

Table 16-68. Control Contact Ratings (B600)

AC Volts	Maximum Amperes	
	Make	Break
24 – 120 121 – 600	30 3600 VA	3.00 360 VA
Continuous Current Rating: 5A		

Overload Relay Reset Extension

- Used to adjust overload reset rod depth of Class A200 Model J starters and current design overload relays to same dimensions as obsolete B200 starters and overloads identified by suffix **B**, i.e., BA13**B**.

When replacing obsolete B200 device with Class A200 starter and Type B overload, order Style 6710C11H03. No charge.

When replacing obsolete B200 device with Class A200 starter and Type A overload, order Style 1490C15H10. No charge.

Power Pole Kit

- Adds 1NO or 1NC power pole to Size 00 – 1 A201 Class contactors.
- Factory installed or field mountable in load side auxiliary cavities.
- 600V AC.
- Continuous current rating of 18A for Size 0, 27A for Size 1.

Table 16-69. Power Pole Kit ③

Continuous Current Rating	Kit Size	Kit Catalog Number
Normally Open		
18 27	0 1	**PN0-0** **PN0-1**
Normally Closed		
18 27	0 1	**PNC-0** **PNC-1**

③ Do not use with DC operated contactors.

16

16

Replacement Auxiliary Contacts

Table 16-70. Replacement Auxiliary Contacts

Contactor Size	Contact Arrangement	Aux. Elect. Contact	
		Catalog Number	Style Number
5, 6	1NO + 1NC 2NO 2NC	**J11** **J20** **J02**	**9084A17G01** **9084A17G02** **9084A17G03**
7, 8	1NO 1NC	— —	**578D461G01** **578D461G03**
9	1NO + 1NC 2NO 2NC	— — —	**843D943G04** **843D943G05** **843D943G06**

Extra Auxiliary Contact Kits

All starters include an auxiliary contact with 1NO and 1NC contact. These kits include an auxiliary contact with contacts as shown, plus operating arm and mounting bracket when required.

Table 16-71. Extra Auxiliary Contact Kits

Contactor Size	Contact Arrangement	Style Number
5, 6	1NO + 1NC 2NO 2NC	**3463D94G18** **3463D94G04** **3463D94G19**
7, 8 ①	2NO 1NO	**818D498G06** **818D498G04**

① Size 7 and larger use DC coils as standard.

DC Coil Conversion Kits

Kits listed below include all necessary parts to convert from AC to DC control including the DC coil with built-in diode, rectifier, auxiliary interlock and all mounting hardware.

Table 16-72. DC Coil Conversion Kits

Size	Voltage	Kit Style Number
5	110-120 220-240 440-480	**7864A28G01** **7864A28G02** **7864A28G03**
6	110-120 220-240 440-480	**7864A29G01** **7864A29G02** **7864A29G03**

Mechanical Interlocks

Table 16-73. Mechanical Interlocks

Contactor Sizes	Style Numbers	
	Horizontal	Vertical
3, 4 and 5 5 and 5 5 and 6 6 and 6 6 and 7, 8	**2050A11G75** **2050A11G25** **2050A11G27** **2050A11G26** —	**2050A11G65** **2050A11G15** **2050A11G17** **2050A11G16** **2050A11G55**
7, 8 and 7, 8 7, 8 and 9 9 and 9	No (Rear Conn.) No (Rear Conn.) No (Rear Conn.)	**567D624G01** **9944D56G06** **9944D56G01**

Overload Protection

Overload Protection Size 5 Starters

Type B overload relay is a three-pole, block type, thermal ambient compensated device with manual reset mounted integrally. Current transformers are enclosed in a protective case and integrally mounted to save panel space. Standard ratio is 300:5.

Overload Protection Size 6 Starters

Overload protection assembly consists of three current transformers, Type B three-pole block overload relay and an optional interposing relay. These parts are mounted on a panel which connects directly to the load terminal of the contactor. Current transformers are 600:5 ratio as standard.

If automatic reset is required, the Type A, three-pole block, ambient compensated relay is available upon request.

Overload Relay Kits

Each kit includes three current transformers (standard ratio) and one Type B, three-pole block overload relay, ambient compensated with manual reset.

Table 16-74. Overload Relay Kits

Kit Size	Kit Part Number
5 6	**2057A34G01** **6379D80G10**

Table 16-75. Replacement Terminal Lugs ②

Contactor Size	Cable Size	Terminals		Kit Style Number
		Qty. in Kit	Qty. Req'd. per Pole	
5 6 7 8	1-500 MCM 2-500 MCM 4-500 MCM 4-500 MCM	6 6 12 12	2 2 4 4	**2119A76G01** **7858A96G01** **7858A96G02** **7858A96G03**

② All mounting hardware is included in kit.

XT IEC

Auxiliary Contacts

Front mounted snap-on auxiliary contacts for *XT* contactors are available with screw or spring cage terminals in a variety of contact configurations.

Notes:
The 7 – 32A XTCE Contactors have positively driven contacts between the integrated auxiliary contact and the auxiliary contact module as well as within the auxiliary contact modules.

The 40 – 65A XTCE Contactors have positively driven contacts within the auxiliary contact module. 6 auxiliary contacts are possible with a combination of side mounted and front mount auxiliary contacts.

Frame B – C contactors with 1NC built-in auxiliary are mirror contacts (XTCE...B01_ – XTCE...C01_).

Table 16-76. XTCE and XTCS Auxiliary Contact Overview

Frame	A	B	C	D	F	G	L – R
Catalog Numbers	XTMC6A... – XTMC9A...	XTCE007B... – XTCE015B...	XTCE018C... – XTCE032C...	XTCE040D00_ – XTCE065D00_	XTCE080F00_ – XTCE095F00_	XTCE115G00_ – XTCE150G00_	XTCE185L22_ – XTCEC20R22_ ①
Contactor Width	45 mm	45 mm	45 mm	55 mm	90 mm	90 mm	Various
Built-In Auxiliary	1NO or 1NC	1NO or 1NC	1NO or 1NC	—	—	—	2NO-2NC
Contact Sequence	A1 1 3 5 13 A2 2 4 6 14	A1 1 3 5 21 A2 2 4 6 22		A1 1 3 5 A2 2 4 6			A1 1 3 5 13 21 31 43 A2 2 4 6 14 22 32 44
Front (Top) Mount Auxiliary	**2-Pole & 4-Pole (Screw or Spring Cage):**	**Standard 2-Pole & 4-Pole Versions (Screw or Spring Cage):** **Tall Version (Screw Only):**		**2-Pole (Screw Only):** **4-Pole (Screw or Spring Cage):**			N/A
Side Mount Auxiliary	N/A	N/A	**2-Pole (Screw Only):**	**2-Pole (Screw or Spring Cage):**			

① Frame L – R auxiliary contacts also apply to XTCS185L... – XTCS500M... contactors.

16

Table 16-77. Auxiliary Contacts

	Conventional Thermal Current, Open at 60°C $I_{th} = I_e$, AC-1 in Amps	Poles	Contact Configuration	Circuit Symbol	Pkg. Qty.	Screw Terminals Catalog Number	Spring Cage Terminals Catalog Number
Frame B – C — Front (Top) Mount							
	16	2	2NO	53 63 54 64	5	**XTCEXFAC20**	**XTCEXFACC20**
	16	2	1NO-1NC	53 61 54 62	5	**XTCEXFAC11**	**XTCEXFACC11**
	16	2	2NC	51 61 52 62	5	**XTCEXFAC02**	**XTCEXFACC02**
	16	2	$1NO_E$-$1NC_L$	57 65 58 66	5	**XTCEXFALC11** ①	**XTCEXFALCC11** ①
	16	2	1NO-1NC	21 33 22 34 21 31	5	**XTCEXFDC11** ②	**XTCEXFDCC11** ②
	16	2	2NC	21 31 22 32	5	**XTCEXFCC02** ②	**XTCEXFCCC02** ②
	16	4	4NO	53 63 73 83 54 64 74 84	5	**XTCEXFAC40**	**XTCEXFACC40**
	16	4	3NO-1NC	53 61 73 83 54 62 74 84	5	**XTCEXFAC31**	**XTCEXFACC31**
	16	4	2NO-2NC	53 61 71 83 54 62 72 84	5	**XTCEXFAC22**	**XTCEXFACC22**
	16	4	1NO-3NC	53 61 71 81 54 62 72 82	5	**XTCEXFAC13**	**XTCEXFACC13**
	16	4	4NC	51 61 71 81 52 62 72 82	5	**XTCEXFAC04**	**XTCEXFACC04**
	16	4	$1NO_E$-$1NC_L$	57 65 71 83 58 66 72 84	5	**XTCEXFCLC22** ①	**XTCEXFCLCC22** ①
	16	4	2NO-2NC	21 31 43 53 22 32 44 54	5	**XTCEXFCC22** ②	**XTCEXFCCC22** ②

① 1 early-make contact ($1NO_E$), 1 late-break contact ($1NC_L$).
② To avoid duplicate terminal numbers in contact sequence, these auxiliary contacts should only be used with contactors having a built-in 1NO contact (XTCE...B10_, XTCE...C10_).

16

Technical Data ..... **Page 18-26**

Table 16-77. Auxiliary Contacts (Continued)

	Conventional Thermal Current, Open at 60°C Ith = Ie, AC-1 in Amps	Poles	Contact Configuration	Circuit Symbol	Pkg. Qty.	Screw Terminals Catalog Number	Spring Cage Terminals Catalog Number
Frame B – C — Front (Top) Mount — Tall Version ②							
	16	2	2NO	53 63 / 54 64	5	**XTCEXFATC20**	—
	16	2	1NO-1NC	53 61 / 54 62	5	**XTCEXFATC11**	—
	16	2	2NC	51 61 / 52 62	5	**XTCEXFATC02**	—
	16	4	2NO-2NC	53 61 71 83 / 54 62 72 84	5	**XTCEXFATC22**	—
Frame C — Side Mount							
	10	2	1NO-1NC	53 61 / 54 62	1	**XTCEXSCC11 ③**	—
Frame D – G							
	16	2	2NO	13 23 / 14 24	5	**XTCEXFBG20**	—
	16	2	1NO-1NC	53 61 / 54 62	5	**XTCEXFAG11**	—
	16	2	1NO-1NC	13 21 / 14 22	5	**XTCEXFBG11**	—
	16	2	2NC	11 21 / 12 22	5	**XTCEXFBG02**	—
	16	4	4NO-0NC	13 23 33 43 / 14 24 34 44	5	**XTCEXFBG40**	**XTCEXFBGC40**
	16	4	3NO-1NC	13 21 33 43 / 14 22 34 44	5	**XTCEXFBG31**	**XTCEXFBGC31**
	16	4	2NO-2NC	13 21 31 43 / 14 22 32 44	5	**XTCEXFBG22**	**XTCEXFBGC22**
	16	4	2NO-2NC	53 61 71 83 / 54 62 72 84	5	**XTCEXFAG22**	**XTCEXFAGC22**
	16	4	1NO-3NC	13 21 31 41 / 14 22 32 42	5	**XTCEXFBG13**	**XTCEXFBGC13**
	16	4	0NO-4NC	11 21 31 41 / 12 22 32 42	5	**XTCEXFBG04**	**XTCEXFBGC04**
	16	4	$1NO_E$-$1NC_L$	13 21 35 47 / 14 22 36 48	5	**XTCEXFBLG22 ①**	**XTCEXFBLGC22 ①**

① 1 early-make contact ($1NO_E$), 1 late-break contact ($1NC_L$).
② Front (Top) Mount Tall Version is for use with Frame B Electrical Wire Bridges and Link Kits and Toolless Plug Combination Connection Kits: XTCEXRLB, XTCEXSDLB, XTPAXTPCB, XTPAXTPCRB, XTPAX.
③ Can be mounted to the left side of contactor only. Cannot be used in combination with front (top) mount auxiliary contacts or mechanical interlocks.

Notes:
- Interlocked opposing contacts, to IEC/EN 60947-5-1 Annex L (positively driven), within the auxiliary contact modules (not NO (early make) and NC (late break) contacts) and for the built-in auxiliary contacts of the XTCE007B... – XTCE032C....
- Auxiliary break contact can be used as mirror contact to IEC/EN 60947-4-1 Annex F (not NC (late break) contact).
- No auxiliary contacts can be fitted between two contactors.

Technical Data ..... **Page 18-26**

Table 16-78. Side Mount Auxiliary Contacts for Frame D – R, 40 – 2000A

	Conventional Free Air Thermal Current, Ith = Ie, AC-1 in Amps	Poles	Contact Configuration	Circuit Symbol	Pkg. Qty.	Screw Terminals Catalog Number	Spring Cage Terminals Catalog Number
Frame D – R							
	10	2	1NO-1NC	13 21 / 14 22	1	**XTCEXSBN11**	**XTCEXSBNC11**
	10	2	$1NO_E$-$1NC_L$	17 25 / 18 26	1	**XTCEXSBLN11 ①**	—
	10	2	1NO-1NC	53 61 / 54 62	1	**XTCEXSCN11 ②**	**XTCEXSCNC11 ②**

① 1 early-make contact ($1NO_E$), 1 late-break contact ($1NC_L$).
② To maintain proper terminal marking, XTCEXSCN_ should not be used with Frame D contactors and only used with Frame F – G contactors in combination with XTCEXSBN_.

Table 16-79. Auxiliary Contacts Possible Combinations

Frame Size	Catalog Number	Contactor	Built-In Auxiliary	Front (Top) Mount 2-Pole	Front (Top) Mount 4-Pole	Side Mount 2-Pole	Total Auxiliary Contacts Available
A	**XTMC6A... – XTMC9A...**		1NO or 1NC	1	—	—	3
				—	1	—	5
						—	—
B	**XTCE007B... – XTCE015B...**		1NO or 1NC	1	—	—	3
				—	1	—	5
						—	—
C	**XTCE018C... – XTCE032C...**		1NO or 1NC	1	—	—	3
				—	1	—	5
				—	—	1	3
							—
D	**XTCE040D00_ – XTCE065D00_**		—	1	—	2	6
				—	1	1	6
							—
F – G	**XTCE080F00_ – XTCE150G00_**		—	1	—	2	6
				—	1	2	8
				—	—	4	8
							—
L – R	**XTCE185L22_ – XTCEC20R22_**		2NO-2NC	—	—	2	8
				—	—		—

Notes:
- Forced operation contact to IEC/EN 60947-5-1 Appendix L (positively driven), inside the auxiliary contact unit (not early close and late opening).
- Auxiliary normally closed contact can be used as mirror contact to IEC/EN 60947-4-1 Appendix F (not late opening).
- No auxiliary contacts can be fitted between two contactors.

Technical Data ..... **Page 18-26**

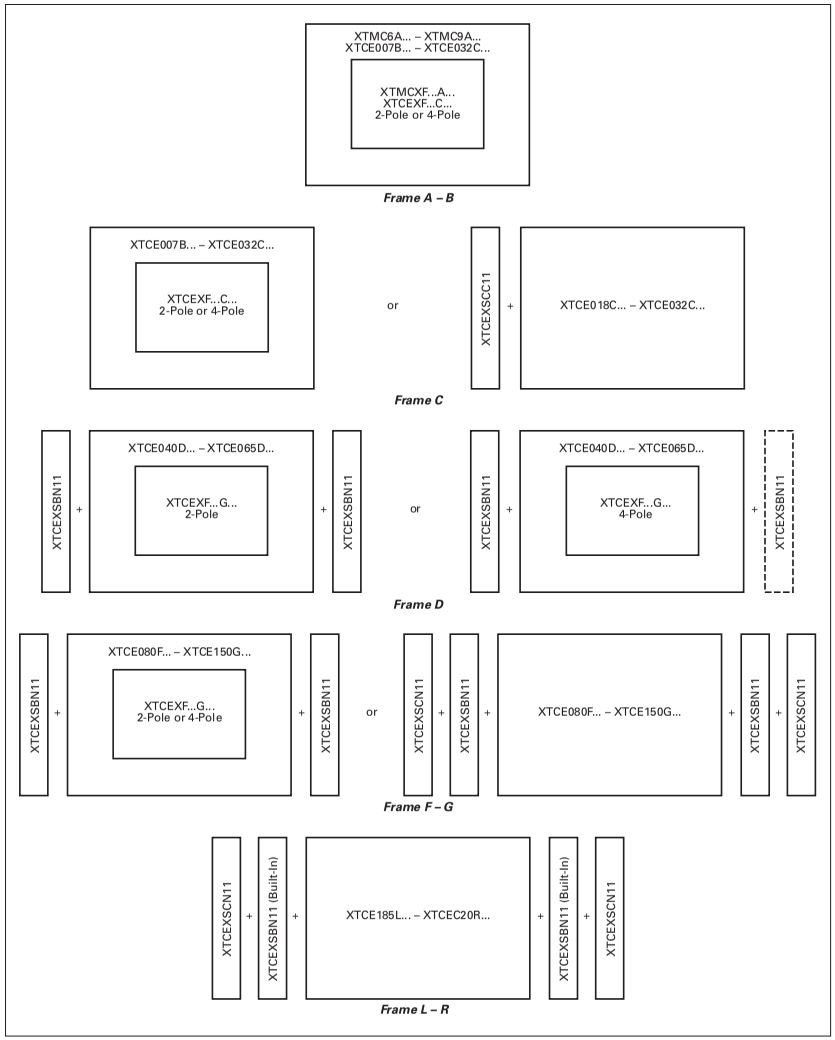

Figure 16-13. Auxiliary Contact Combinations

Type 1 Enclosures

Table 16-80. Type 1 Enclosures — NEMA (Freedom and *IT*. Type)

Starter Type	Box Number	NEMA Size AN16	Catalog Number
Non-reversing Starter	1	00 – 1	**C799B11** ① ④
	1	—	**C799B12** ①
	2	2	**C799B13**
	4	3 – 4	**C799B15**
	10	5	**C799B17**
Non-reversing Starter with Space for CPT	3	00 – 2	**C799B14** ②
	4	3 – 4	**C799B15** ③
Reversing Starter	2	00 – 0	**C799B13**
	3	1 – 2	**C799B14**
	4	3	**C799B15**
	9	4	**C799B16**
	10	5	**C799B17**

① In order to install cover control kits for NEMA Sizes 00 – 2 and IEC Sizes A – F, the starter must be provided with a **side mounted** auxiliary contact or a separately ordered Dummy Contact Block, **C320KGSD** from **Table 16-81**, to serve as a mounting base. **Note:** NEMA Size 00 open type devices **are not** supplied as standard with side mounted auxiliaries.
② Sub panel drilled for 50 – 200 VA CPTs.
③ Enclosure drilled for 150 – 300 VA CPTs.
④ If 8 AWG wire is used with NEMA Size 1 starter, the enclosure should be changed to a Box 2 (C799B13).

Note: Box 1 will **not** accept devices with top mounted auxiliaries. Box 2 will accept NEMA Sizes 00 and 0 starters with top mounted auxiliaries.

Table 16-81. Dummy Contact Block

Application	Catalog Number
Dummy Contact Block	**C320KGSD**

Type 1

Type 3R

Type 3R, 4X and 12 Enclosures

Table 16-82. Type 3R, 4X and 12 Enclosures — NEMA (Freedom and *IT*. Type)

Starter Type	Box Number	NEMA Size AN16	Type 3R Catalog Number	Type 12 Catalog Number	Type 4X Catalog Number
Non-reversing Starter	5	00 – 1	C799B21	C799B81	C799B41
	6	2	C799B24	C799B84	C799B43
	6	—	C799B25	C799B85	C799B44
	8	3	C799B210	C799B810	C799B47
	8	—	C799B212	C799B812	C799B49
	8	4	C799B211	C799B811	C799B48
	10	5	C799B218	C799B818	C799B413
Non-reversing Starter with Space for CPT	6	00 – 2	C799B24	C799B84	C799B43
	6	—	C799B25	C799B85	C799B44
	8	3	C799B210	C799B810	C799B47
	8	—	C799B212	C799B812	C799B49
	8	4	C799B211	C799B811	C799B48
	10	5	C799B218	C799B818	C799B413
Reversing Starter	6	00 – 2	C799B24	C799B84	C799B43
	6	—	C799B25	C799B85	C799B44
	8	3	C799B210	C799B810	C799B47
	8	—	C799B212	C799B812	C799B49
	9	4	C799B215	C799B815	C799B411
	10	5	C799B218	C799B818	C799B413
Multispeed	7 ①	0 – 2	C799B223	C799B823	C799B417

① Blank cover provided.

Table 16-83. Type 3R, 4X and 12 Enclosures — NEMA (Advantage Type) — with Hole Plugs

Starter Type	Box Number	Size	Type 3R Catalog Number	Type 12 Catalog Number	Type 4X Catalog Number
Non-reversing Starter	5	1 – 2	C799B22	C799B82	C799B42
Non-reversing Starter with Space for CPT and Reversing	6	1 – 2	C799B26	C799B86	C799B45
Non-reversing Starter, Non-reversing Starter with Space for CPT, and Reversing	8	3	C799B213	C799B813	C799B410
	9	4	C799B216	C799B816	C799B412
	10	5	C799B219	C799B819	C799B414

Table 16-84. Type 3R, 4X and 12 Enclosures — NEMA (Advantage Type) — with Cutout for 1 ACM and Hole Plugs ②

Starter Type	Box Number	Size	Type 3R Catalog Number	Type 12 Catalog Number
Non-reversing Starter	5	1 – 2	C799B23	C799B83
Non-reversing Starter with Space for CPT and Reversing	6	1 – 2	C799B27	C799B87
Non-reversing Starter, Non-reversing Starter with Space for CPT Reversing	8	3	C799B214	C799B814
	9	4	C799B217	C799B817
	10	5	C799B220	C799B820

② All boxes have 1 ACM cutout. In addition, Box 5 has one 30 mm round hole, Boxes 6 and 7 have two; Boxes 8, 9 and 10 have three holes plugged.

Table 16-85. Enclosures — IEC (*XT* Type)

Starter Type	Box Number	IEC Size	Catalog Number
XT Starters, 15A and 25A, with reset	1	B – C	C799B31
XT Contactors/Starters without reset	1	B – C	C799B33
XT Contactors/Starters with reset	2	B – C – D	C799B36
XT Contactors/Starters without reset	2	B – C – D	C799B34
XT Contactors/Starters with resets	1	B – C	C799B35
XT Contactors/Starters with resets	2	B – C – D	C799B37

Lighting Contactors

Electrically Held Base Contactor for C30CN/ECC

The C30CNE20_0 Electrically Held Base Contactor contains a 2NO power pole as standard and will allow the addition of power poles to build an Electrically Held Contactor up to 12 poles maximum. A Mechanically Held Module Kit can also be added to convert the Electrically Held Contactor into a Mechanically Held Contactor in the field.

Electrically Held Base Contactor

Table 16-86. Electrically Held Base Contactor

Power Poles	Catalog Number ①
2NO	C30CNE20_0

① When ordering, select required contactor by Catalog Number and replace the magnet coil alpha designation in the Catalog Number (_) with the proper Code Suffix from **Table 16-87**.

Table 16-87. Coil Base Voltage (Digit 9)

Voltage (Digit 9)	Code Suffix
115 – 120V 60 Hz/110V 50 Hz	A
230 – 240V 60 Hz/220V 50 Hz	B
460 – 480V 60 Hz/440V 50 Hz	C
575 – 600V 60 Hz/550V 50 Hz	D
200 – 208V 60 Hz	E
265 – 277V 60 Hz/240V 50 Hz	H
24V 60 Hz/20V 50 Hz	T
28V 60 Hz/24V 50 Hz	V
347V 60 Hz	X

Power Poles for C30CNM/ECC

Power Poles

The C30CNM contactor accepts up to a maximum 6 single- or double-pole (or combinations) power poles. These can be used to form up to:

- 12 NO poles max. when 6 double-poles are used in NO positions (1 – 6) or
- 8 NC poles max. with 4 double-poles in the NC position (1 – 4) and 4 NO poles with 2 double-poles in the 2 NO positions (5 – 6)

Table 16-88. Power Poles

Power Poles	Catalog Number
Single-Pole	C320PRP1
Double-Pole	C320PRP2

Mechanically Held Module Kits for C30CN/ECC

These kits are for converting electrically held contactors to mechanically held units. Kits include control module, latch, latch cover and auxiliary contacts plus installation instructions. Conversion kits are suitable for coil voltages of 277V and below.

Conversion Kits

Table 16-89. Mechanically Held Module Kits

Coil Volts	Control Volts	Catalog Number
2-Wire		
24 – 277V AC	110 – 120V AC	C320MH2WA0
	200 – 277V AC	C320MH2WH0
	24V AC	C320MH2WT0
	12 – 24V DC	C320MH2WT1
3-Wire		
24 – 277V AC	110 – 120V AC	C320MH3WA0
	200 – 277V AC	C320MH3WH0
	24V AC	C320MH3WT0
	12 – 24V DC	C320MH3WT1

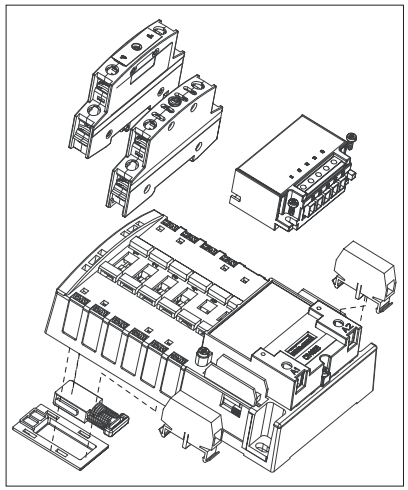

Figure 16-14. C30CNM Components — Exploded View

Auxiliary Contacts for C30CN/ECC

A Mechanically Held Contactor with a 2-wire control module uses 1NC auxiliary contact as standard for the control wiring circuit. The Mechanically Held Contactor with a 3-wire control module uses 1NO-1NC auxiliary contacts as standard for the control wiring circuit. See **Table 16-90** for possible additional auxiliary contact configurations.

Table 16-90. Auxiliary Contact Configurations

2-Wire	3-Wire
None 1NO (single-pole) 2NO (double-pole) 1NC (double-pole) 1NO-1NC (NO single pole, NC double-pole) 2NO-1NC (double-pole)	1NC (double-pole) 1NO (double-pole) 1NO-1NC (double-pole)

Auxiliary Contacts

Table 16-91. Auxiliary Contacts

Auxiliary Block	Catalog Number
Single-Pole	C320AMH1
Double-Pole	C320AMH2

Transient Suppressor Kits for CN35/ECL

10 – 60A Contactors

These kits limit high voltage transients produced in the control circuit when power is removed from the contactor or starter coil. There are three separate suppressors for use on 24 –120V, 240V or 480V coils respectively.

Cat. No. C320TS2

These devices mount directly to the coil terminals of lighting contactors 10 – 60A.

Table 16-92. Kits for 10 – 60A

Description	Coil Voltage	Catalog Number
Transient Suppressor	24 –120V 240V 480V	C320TS1 C320TS2 C320TS3

100 – 300A Contactors

This device mounts on top of any side mounted auxiliary contact on lighting contactors 100 – 300A. It connects across coil terminals on any 120V contactor magnet coil.

Cat. No. C320TS2

Limits high voltage transients produced in the circuit when power is removed from the coil.

Table 16-93. Kits for 100 – 300A

Description	Coil Voltage	Catalog Number
Transient Suppressor	120V	C320AS1

Auxiliary Contacts for CN35/ECL

CN35 Lighting Contactors include a 1NO maintaining auxiliary contact mounted on right hand side (on 10A, 2- and 3-pole devices, auxiliary contact occupies 4th power pole position — no increase in width). The 10 – 60A devices will accept additional auxiliary contacts on the top and/or sides.

Auxiliary contact blocks are designed for snap-on installation — fast, easy installation (no tools required up to 60A). All auxiliary contacts are of the bifurcated design with parallel circuit paths. This redundant path provides very high reliability. Auxiliary contacts can be snapped on the side (up to 2 circuits — per auxiliary contact) and on the top (up to 4 circuits). Auxiliary contacts for larger contactors, 100 – 400A sizes, will accept side mounted auxiliaries only and easily attach to the side of the contactor with 2 screws.

Auxiliary Contacts — 10 – 60A Contactors

Side Mounted

Top Mounted

Auxiliary Contacts — 100 – 400A Contactors

Base Auxiliary Contact Cat. No. C320KGS42

Auxiliary Contact Cat. No. C320KGS22

Contact Configuration Code

This 2-digit code is found on the auxiliary contact to assist in identifying the specific contact configuration. The first digit indicates the quantity of NO contacts and the second indicates the quantity of NC contacts.

Table 16-94. Auxiliary Contacts — 10 – 60A Contactors

Description	Contact Configuration Code ①	Catalog Number
Side Mounted		
1NO 1NC	10 01	C320KGS1 C320KGS2
1NO-1NC 2NO 2NC	11 20 02	C320KGS3 C320KGS4 C320KGS5
Top Mounted ②		
1NO 1NC	10 01	C320KGT1 C320KGT2
1NO-1NC 2NO 2NC	11 20 02	C320KGT3 C320KGT4 C320KGT5
3NO 2NO-1NC 1NO-2NC 3NC 4NO	30 21 12 03 40	C320KGT9 C320KGT10 C320KGT11 C320KGT12 C320KGT13
3NO-1NC 2NO-2NC 1NO-3NC 4NC	31 22 13 04	C320KGT14 C320KGT15 C320KGT16 C320KGT17

① For Reference Only — not part of Catalog Number. See below left.
② Cannot be added to contactors or starters mounted in Box 1 (Type 1).

Table 16-95. Auxiliary Contacts — 100 – 400A Contactors

Circuit	Contact Configuration Code ③	100A Contactors	200 & 300A Contactors
		Catalog Number	Catalog Number
Base Auxiliary Contacts — 100 – 400A Contactors			
NO NO-NC	10 11	C320KGS31 C320KGS32	C320KGS41 C320KGS42

Circuit	Contact Configuration Code ③	Catalog Number
Auxiliary Contacts — 100 – 400A Contactors		
NO NC NO-NC ④	10 01 11	C320KGS20 C320KGS21 C320KGS22

③ For Reference Only — not part of Catalog Number. See below left.
④ NO-NC occupies two positions — L2 & L3 or R2 & R3. See **Page 16-33**.

Table 16-96. Auxiliary Contact Ratings (Amperes)

Current	AC Volts			
	120V	240V	480V	600V
NEMA A600				
Make & Interrupting Break Continuous	60.0 6.0 10.0	30.0 3.0 10.0	15.0 1.5 10.0	12.0 1.0 10.0

NEMA P300	
Continuous Thermal Rating: 5 Amperes	
DC Volts	**Make/Break Amperes**
125 250	1.10 0.55

Auxiliary Contact Location for CN35/ECL

Auxiliary Contacts — Mounting Positions

The sketches below illustrate the maximum number of auxiliary contacts that can be assembled to a contactor and their locations in standard enclosures.

Table 16-97. Auxiliary Contact Mounting Positions

Size	Poles	Available Mounting Positions ①②③		
		Open Type	Type 1	Type 3R, 4X, 12
10 Ampere	2 – 4	T1, L1, R1	L1	L1, T1
20 – 60 Ampere	2 – 3	T1, L1	L1	L1, T1
60 Ampere	4	T1, L1	—	L1, T1
60 Ampere	5	T1, L1	—	L1, T1
100 Ampere	2 – 3	R2, R3, L1, L2, L3	R2, R3, L1, L2, L3	R2, R3, L1, L2, L3
200 Ampere	2 – 3	R2, R3, L1, L2, L3	R2, R3, L1, L2, L3	R2, R3, L1, L2, L3
300 Ampere	2 – 3	R2, R3, L1, L2, L3	R2, R3, L1, L2, L3	R2, R3, L1, L2, L3
400 Ampere	2 – 3	R2, R3, L1, L2, L3	R2, R3, L1, L2, L3	R2, R3, L1, L2, L3

① Available positions on contactors or starters other than what is factory installed.
② When a pneumatic timer is mounted on contactor, only side mounted auxiliary contact positions are available. The solid-state timer, when added, takes up side mounted auxiliary contact position.
③ For 100 – 400A contactors, a base auxiliary contact must be added in position L1 before additional contacts can be mounted.

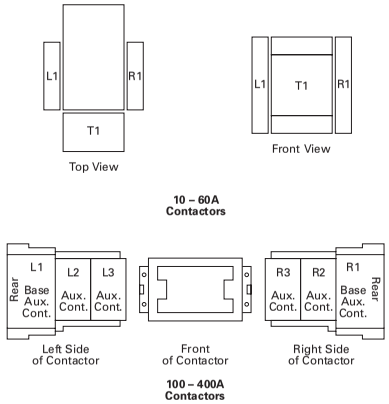

Figure 16-15. Auxiliary Contact Location

Pneumatic Timers — Top Mounted for CN35/ECL

Pneumatic Timer

Attachment mounts on top of 10 – 60A lighting contactors (top mounted auxiliary contacts can not be installed on device when timer is used). Timer unit has DPST timed contacts — circuits in each pole must be the same polarity. Units are convertible from OFF to ON Delay or vice-versa.

Table 16-98. Pneumatic Timers

Timing Range	Catalog Number
.1 to 30 Seconds	**C320TP1**
10 to 180 Seconds	**C320TP2**

Table 16-99. Maximum Ampere Ratings

Description	Volts AC			
	120	240	480	600
Make	30.0	15.0	7.5	6.0
Break	3.0	1.5	0.75	0.6

Solid-State Timers for CN35/ECL

Solid-State ON DELAY Timer — Side Mounted on CN35 Freedom Series Lighting Contactors through 60A

This timer is designed to be **wired in SERIES with the load** (typically a coil). When the START button is pushed (power applied to timer), the ON DELAY timing function starts. At the completion of the set timing period, timer and series wired load will both be energized.

Table 16-100. Product Selection — Mounted Timer

Timing Range	Catalog Number ④⑤⑥
.1 – 1.0 Seconds	**C320TDN1_**
1 – 30 Seconds	**C320TDN30_**
30 – 300 Seconds	**C320TDN300_**
5 – 30 Minutes	**C320TDN3000_**

④ Add operating voltage Suffix to Catalog Number. **A** = 120V, **B** = 240V, **E** = 208V
⑤ Rated .5 ampere pilot duty — not to be used on larger contactors.
⑥ Terminal connections are quick connects only. Two per side.

Type J Auxiliary Contact

Type J Auxiliary Contact for A202/ECL

- Capable of being field mounted in a contactor or starter (Classes A200, A900 Sizes 00 – 6, V200, V201 vacuum and definite purpose controllers).
- Provides two separate electrical contact sets which wire vertically and are color coded; black designates NC and silver designates NO. Please note that the vertical wiring is contrary to the horizontal wiring of the L-56 auxiliary contacts.
- Designed to fit within dimensions of starter; no additional panel space is required.
- Provides circuit isolation (no polarity restrictions) and single break bifurcated contacts.

Table 16-101. Auxiliary Contact Ratings

Voltage	Make	Break
NEMA A600		
120 – 600V AC	7200 VA	720 VA
72 – 120V AC	60A	720 VA
28 – 72V AC	60 VA	10A
NEMA R300		
28 – 300V DC	28 VA	28 VA

Table 16-102. Auxiliary Contact Types

Contact Type	Max.	Catalog Number
1NO and 1NC	4	**J11**
2NC	4	**J02**
2NO	4	**J20**
1 Coil Clearing NC and 1NO	4	**J1C**

SS-56 Surge Suppressor

SS-56 Surge Suppressor for A202/ECL

- Designed to be used with magnetic motor controllers through Size 4 in 120V, 60 Hz control circuit applications where electronic equipment is used.
- Steady State Coil Volts: 120, 60 Hz, RMS
- Peak Input Volts: 169.6, 60 Hz, Max. Amplitude
- Max. Ambient Temperature: 65°C
- Nominal Limiting Volts: 270 Peak
- Nominal Rate of Volt Rise: .5 per mS

Table 16-103. Surge Suppressor ①

Type Mounting	Kit Catalog Number
Starter	**SS-56**

① Can be used on Sizes 5 and 6 with 120V coil. Mounting bracket required — order separately. Mounting Bracket 177C043G04.

F-56 Fuse Block for A202/ECL

- Facilitates installation of fuses (15A, 600V max.) in control circuits.
- Utilizes Bussman type KTK fuses, or equivalent.
- Mounts in same cavity as Type J auxiliary contact.
- No tools or mounting hardware needed.
- Fuse not included.

Table 16-104. Fuse Block

Mounting	Kit Catalog Number
Starter	**F56**
Panel	**F56-P**

R-56 Interposing Relay for A202/ECL

The R-56AA interposing relay is a low energy solid-state device with a single NO solid-state contact. It can be used as a 120V AC control relay, and will operate on as little as 40V AC input. Is useful in applications requiring long control wiring runs where excessive voltage drop would prevent the contactor or relay from energizing. Will operate a Size 4 contactor from 10,000 feet using 18 AWG wire.

Table 16-105. Interposing Relay

Type Mounting	Kit Catalog Number
Starter or Panel	**R56-AA**

Power Pole Kit for A202/ECL

- Adds 1NO or 1NC power pole to Size 00 – 1 A201 Class contactors.
- Factory installed or field mountable in load side auxiliary cavities.
- 600V AC.
- Continuous current rating of 18A for Size 0, 27A for Size 1.

Table 16-106. Power Pole Kit ②

Continuous Current Rating	Kit Size	Kit Catalog Number
Normally Open		
18	0	**PNO-0**
27	1	**PNO-1**
Normally Closed		
18	0	**PNC-0**
27	1	**PNC-1**

② Do not use with DC operated contactors.

Replacement Auxiliary Contacts for A202/ECL

Table 16-107. Replacement Auxiliary Contacts

Contactor Size	Contact Arrangement	Aux. Elect. Contact	
		Catalog Number	Style Number
5, 6	1NO + 1NC 2NO 2NC	J11 J20 J02	9084A17G01 9084A17G02 9084A17G03
7, 8	1NO 1NC	— —	578D461G01 578D461G03
9	1NO + 1NC 2NO 2NC	— — —	843D943G04 843D943G05 843D943G06

Extra Auxiliary Contact Kits for A202/ECL

All starters include an auxiliary contact with 1NO and 1NC contact. These kits include an auxiliary contact with contacts as shown, plus operating arm and mounting bracket when required.

Table 16-108. Extra Auxiliary Contact Kits

Contactor Size	Contact Arrangement	Style Number
5, 6	1NO + 1NC 2NO 2NC	3463D94G18 3463D94G04 3463D94G19
7, 8 ①	2NO 1NO	818D498G06 818D498G04

① Size 7 and larger use DC coils as standard.

DC Coil Conversion Kits for A202/ECL

Kits listed below include all necessary parts to convert from AC to DC control including the DC coil with built-in diode, rectifier, auxiliary interlock and all mounting hardware.

Table 16-109. DC Coil Conversion Kits

Size	Voltage	Kit Style Number
5	110-120 220-240 440-480	7864A28G01 7864A28G02 7864A28G03
6	110-120 220-240 440-480	7864A29G01 7864A29G02 7864A29G03

IT. Solid-State Soft Starters

Auxiliary Contacts for S752

The S752 allows for the use of top mounted auxiliary contacts. These contacts can be used for up-to-speed indication.

Table 16-110. S752 Auxiliary Contacts

Poles	Catalog Number
1NO 1NC 1NO/1NC	EMA13 EMA14 EMA15
2NO 2NC 1NO/1NC Logic Level	EMA16 EMA17 EMA70

Table 16-111. S752 — Maximum Number of Auxiliary Contacts

EMA13 1NO	EMA14 1NC	EMA15 1NO/1NC	EMA16 2NO	EMA17 2NC	EMA70 1NO/1NC Logic Level
3	3	2 ①	2 ①	2 ①	3

① One EMA70 or one EMA13/EMA14 may be used in the center position in conjunction with two of these devices in the outer positions.

Table 16-112. S752 — Auxiliary Contact Ratings (EMA13 – EMA17)

DC-13		AC-15	
U_e Voltage	I_e Amps	U_e Voltage	I_e Amps
24 48	5 2.5	48 120	8 6
125 250	1.1 0.55	240 440	4 2

Table 16-113. S752 — Auxiliary Contact Ratings (EMA70)

DC-12		AC-12	
U_e Voltage	I_e Amps	U_e Voltage	I_e Amps
30	0.1	250	0.1

Starter Network Adapter Product (SNAP)

The Starter Network Adapter Product (SNAP) is a front-mount device that serves as a single DeviceNet node, providing communication capability, control and monitoring to Eaton's Cutler-Hammer Intelligent Technologies (*IT.*) Electromechanical Starters (B – F Frames) as well as the *IT.* S752 SoftStart.

Cat. No. D77B-DSNAP-X1 with 54 mm IT. Starter

When HAND-OFF-AUTO is required, the HOA option will allow for the connection of hard wired operators. This option allows for Hand Control even if the DSNAP is not connected.

For more information and pricing, see Publication No. CA08102001E, Tab 50.

Control Terminal Block for S752

Table 16-114. S752 Control Terminal Block

Description	Catalog Number
Locking Terminal Block	EMA76LS

Surge Suppressors for S801/S811

The surge suppressor can mount on either the line or load side of the *IT.* Soft Starter. It is designed to clip the line voltage (or load side induced voltage).

Surge Suppressor

Surge Suppressor Mounted on a 200 mm Device

Table 16-115. Surge Suppressors

Description	Catalog Number
600V MOV for *IT.* Soft Starters	EMS39
690V MOV for *IT.* Soft Starters	EMS41

Lug Kits for S801/S811

The 200 mm and 290 mm soft starters do not include lugs.

The 200 mm and 290 mm soft starters each have different lug options based on your wiring needs. Each lug kit contains three lugs which can be mounted on either the load or line side.

Lug Kits — EML23

Table 16-116. Lug Kits

Frame Size	Frame Designation	Description	Catalog Number
200 mm SSRV	T, U	2 cable connections, 4 AWG to 1/0 cable 1 cable connection, 4/0 to 500 MCM cable 2 cable connections, 4/0 to 500 MCM cable 1 cable connection, 2/0 to 300 MCM cable 2 cable connections, 2/0 to 300 MCM cable	EML22 EML23 EML24 EML25 EML26
290 mm SSRV	V	2 cable connections, 4/0 to 500 MCM cable 4 cable connections, 4/0 to 500 MCM cable 6 cable connections, 4/0 to 500 MCM cable 4 cable connections, 2/0 to 300 MCM cable	EML28 EML30 EML32 EML33 ①

① The EML33 does not have a CSA Listing.

Lug Cover Kits for S801/S811

Replacement covers for the T and V frame are available in case of damage to the existing covers.

Table 16-117. Lug Cover Kits

Description	Catalog Number
Lug Cover T, U Frame	EML27
Lug Cover V Frame	EML34

Digital Interface Module and Control Interface Module

The Digital Interface Module (DIM) and control interface module are available as replacement parts.

Table 16-118. DIM and CIM

Description	Catalog Number
Blank Cover (Filler)	EMA68
DIM for S811	EMA91
CIM for S801	EMA71
CIM for S801 Pump Control Option	EMA72
Panel Mounting Kit — 3 ft. Cable 5 ft. Cable 8 ft. Cable 10 ft. Cable	 EMA69A EMA69B EMA69C EMA69D

Control Wire Connector

Table 16-119. Control Wire Connector

Description	Catalog Number
12 pin, 5 mm pitch Connector for Control Wiring	EMA75L

User Manual for S811

A comprehensive user manual is available and can be downloaded free of charge from www.eaton.com by performing a document search for MN03902002E.

Mounting Plates for S801/S811

The Mounting Plates are designed to help make it easy to install or retrofit the soft starter into enclosures and MCCs. The soft starter can be mounted onto the plate prior to installation. The mounting plate is designed with tear drop mounting holes for easier installation.

Table 16-120. Mounting Plates

Description	Catalog Number
Mounting Plate N Frame	EMM13N
Mounting Plate R Frame	EMM13R
Mounting Plate T, U Frame	EMM13T
Mounting Plate V Frame	EMM13V
Fan/Hood Accessory	EMM18

Adapter Plates

The Adapter Plate allows customers to retrofit a V-Frame 290 mm Soft Starter with the U-Frame 200 mm Soft Starter.

Table 16-121. Adapter Plates

Description	Catalog Number
Adapter Plates ②	EMM13U

② For more information see Pub51719.

Vibration Plates for S801/S811

The Vibration Plates allow the soft starter to be applied in high shock and vibration applications. The vibration plate allows vibration up to 5g and shock in up to 40g. The soft starter is mounted onto the vibration plate prior to installation in the panel.

Table 16-122. Vibration Plates

Description	Catalog Number
Vibration Plate N Frame	EMM14N
Vibration Plate R Frame	EMM14R
Vibration Plate T, U Frame	EMM14T
Vibration Plate V Frame	EMM14V

Power Supplies

24V DC Power Supply which can be used with the S752, S801 or S811 SSRV or as a stand-alone device.

Table 16-123. Power Supplies

Description	SSRV	Catalog Number
115V – 240V AC Input	S752	PSS25E
380V – 480V AC Input	S752	PSS25F
115V AC Input	S801/S811	PSS55A
230V AC Input	S801/S811	PSS55B
380 – 480V AC Input	S801/S811	PSS55C

DIN Rail Power Supply Mounting Kit (35 mm)

Table 16-124. DIN Rail Mounting Kit

Description	Catalog Number
DIN Rail Mounting Kit (35 mm)	PSSDIN

MVX900 Microdrives

Table 16-125. Field Options Kits

Description	Catalog Number
Keypads Copy Keypad Standard Keypad Remote Kit	 MVXCOPY MVXKPD MVXRM
Miscellaneous Options Extension I/O DIN Rail	 MVXEIO MVXDR
Communications DeviceNet Module	 MVXDN
Type 1 Enclosure Small Frame Large Frame	 MVXENCS MVXENCL
3% Line Reactor, 1-phase 1/2 hp, 240V 1 hp, 240V 2 hp, 240V 3 hp, 240V	 K64-000988-8091 K64-000988-0120 K64-000988-0180 K64-000988-0250
3% Line Reactor, 3-phase 1 hp, 480V 2 hp, 480V 3 hp, 480V 5 hp, 480V 7-1/2 hp, 480V 10 hp, 480V	 K64-000989-2091 K64-000989-4091 K64-000989-4091 K64-000989-8091 K64-000989-0180 K64-000989-0250
1/2 hp, 240V 1 hp, 240V 2 hp, 240V 3 hp, 240V 5 hp, 240V 7-1/2 hp, 240V	K64-000988-2091 K64-000988-4091 K64-000988-8091 K64-000988-0120 K64-000988-0180 K64-000988-0250
Output Line Reactor 1 hp, 480V 2 hp, 480V 3 hp, 480V 5 hp, 480V 7-1/2 hp, 480V 10 hp, 480V	 K64-000989-2091 K64-000989-4091 K64-000989-4091 K64-000989-8091 K64-000989-0120 K64-000989-0180
EMI Filter 1/2 hp, 240V AC, Single-Phase 1 hp, 240V AC, Single-Phase 2 hp, 240V AC, Single-Phase 3 hp, 240V AC, Single-Phase	 K13-000034-0111 K13-000034-0111 K13-000034-0111 K13-000034-0112
1/2 hp, 240V AC, Three-Phase 1 hp, 240V AC, Three-Phase 2 hp, 240V AC, Three-Phase 3 hp, 240V AC, Three-Phase 5 hp, 240V AC, Three-Phase 7-1/2 hp, 240V AC, Three-Phase	K13-000034-0113 K13-000034-0113 K13-000034-0113 K13-000034-0113 K13-000034-0115 K13-000034-0115
1 hp, 480V AC, Three-Phase 2 hp, 480V AC, Three-Phase 3 hp, 480V AC, Three-Phase 5 hp, 480V AC, Three-Phase 7-1/2 hp, 480V AC, Three-Phase 10 hp, 480V AC, Three-Phase	K13-000034-0114 K13-000034-0114 K13-000034-0114 K13-000034-0116 K13-000034-0116 K13-000034-0117
Dynamic Braking Resistor 1/2 – 1 hp, 240V 2 – 3 hp, 240V 5 hp, 240V 7-1/2 hp, 240V	 K13-000034-0821 K13-000034-0824 K13-000034-0825 K13-000034-0826
1 hp, 480V 2 – 3 hp, 480V 5 hp, 480V 7-1/2 hp, 480V 10 hp, 480V	K13-000034-0841 K13-000034-0843 K13-000034-0844 K13-000034-0845 K13-000034-0846

NEMA Vacuum Break Control

Lug Sizes

- Size 4 — 12 – 4/0
- NEMA Size 5 & 6 and 320A, 540A & 610A — Supplied without Line or Load Lugs.

Table 16-126. Lug Kits — Consist of 6 Lugs

Size	Description	Catalog Number
5 and 320A	1/0 – 500 kcmil	**C325KAL8**
6, 540A and 610A	1/0 – 500 kcmil Dbl. Barrel	**C325KAL9**
610A	1/0 – 600 kcmil Dbl. Barrel	**80-19825-2**

Field Modification Kits

Auxiliary Electrical Contacts

Size 4 — Three Type J auxiliary contacts may be mounted on the top of Size 4 contactors to provide six auxiliary, isolated 600V, 10A contacts for use in control circuits.

Sizes 5 – 6 — Two Type J auxiliary contacts may be mounted on each side of Size 5 and 6 contactors to provide four auxiliary, isolated 600V,10A contacts for use in control circuits.

Table 16-127. Auxiliary Electrical Contacts

Contact Arrangement	Catalog Number
1NO, 1NC	**J11**
2NO	**J20**
2NC	**J02**

Table 16-128. Horizontal Mechanical Interlock

Size	Catalog Number
4	**180C113G04**
5	**180C113G16**
6	**180C113G17**

Heater Coils

Table 16-129. Heater Coil Selection for Type B Overload Relay

Motor Full Load Current in Amperes for Use with 3 Heaters Only	
Open Starter	Heater Catalog Number ①
Ambient Compensated Overload Relay	
Size 4 and 160A	
12.8 – 14.1	**FH68**
14.2 – 15.5	**FH69**
15.6 – 17.1	**FH70**
17.2 – 18.9	**FH71**
19.0 – 20.8	**FH72**
20.9 – 22.9	**FH73**
23.0 – 25.2	**FH74**
25.3 – 27.8	**FH75**
27.9 – 30.6	**FH76**
30.7 – 33.5	**FH77**
33.6 – 37.5	**FH78**
37.6 – 41.5	**FH79**
41.6 – 46.3	**FH80**
46.4 – 50	**FH81**
51 – 55	**FH82**
56 – 61	**FH83**
62 – 66	**FH84**
67 – 73	**FH85**
74 – 78	**FH86**
79 – 84	**FH87**
85 – 92	**FH88**
93 – 101	**FH89**
102 – 110	**FH90**
111 – 122	**FH91**
123 – 129	**FH92**
130 – 133	**FH93**
—	**FH94**
Size 5 and 320A with 300/5 Current Transformers	
107 – 117	**FH23**
118 – 129	**FH24**
130 – 141	**FH25**
142 – 155	**FH26**
156 – 170	**FH27**
171 – 187	**FH28**
188 – 205	**FH29**
206 – 224	**FH30**
225 – 244	**FH31**
245 – 263	**FH32**
264 – 292	**FH33**
293 – 318	**FH34**
319 – 350	**FH35**
Size 6 and 540A with 600/5 Current Transformers	
236 – 259	**FH24**
260 – 283	**FH25**
284 – 310	**FH26**
311 – 340	**FH27**
341 – 374	**FH28**
375 – 411	**FH29**
412 – 448	**FH30**
449 – 489	**FH31**
490 – 527	**FH32**
528 – 585	**FH33**
586 – 600	**FH34**

① Three are required per overload relay.

Note: For information on H2001 heaters, see **Page 16-6**.

Modification Codes

Table 16-130. A — Ammeters, Auxiliary Contacts, Accelerating Relays, Autotransformers

Modification	Catalog Number Suffix	Description
Ammeter ①	**A1**	Panel Type Wired to Current Transformer in Line 1, Type 1, 12
		Panel Type Wired to Current Transformer in Line 1, Type 3R, 4X
	A2	Panel Type, Selector Switch and 3 Current Transformers Wired to Ammeter via Switch, Type 1, 12
		Panel Type, Selector Switch and 3 Current Transformers Wired to Ammeter via Switch, Type 3R, 4X
	A3	Miniature (Single-Phase), Type 1, 12
	A4	Miniature with Selector Switch, Type 1, 12
	A5	Switchboard (Single-Phase), Type 1, 12
		Switchboard (Single-Phase), Type 3R, 4X
	A6	Switchboard with Selector Switch, Type 1, 12
		Switchboard with Selector Switch, Type 3R, 4X
	A7	3-Panel Type (Single-Phase), Type 1, 12
		3-Panel Type (Single-Phase), Type 3R, 4X
	A10	3 Miniature (Single-Phase), Type 1, 3R, 4X, 12
	A11	3 Switchboard Type (Single-Phase), Type 1, 12
		3 Switchboard Type (Single-Phase), Type 3R, 4X
	A12	Ammeter Order by Description, Type 1, 3R, 4X, 12
Auto-transformers	**A8**	hp Rating selection, see **Pages 6-21 – 6-28**
	A9	Order by Description
Top Mounted Auxiliary Contacts ②③ (Unwired)	**A13**	1NO
	A14	1NC
	A15	1NO-1NC
	A16	2NO
NEMA Sizes 00 – 2 only (Unwired)	**A17**	2NC
	A18	2NO-1NC
	A19	1NO-2NC
	A20	3NO
IEC Sizes B – L Only (Unwired) ***XT*** Series	**A21**	3NC
	A22	3NO-1NC
	A23	2NO-2NC
	A24	1NO-3NC
	A25	4NO
	A26	4NC
Side Mounted Auxiliary Contacts ③④	**A27**	1NO
	A28	1NC
	A29	1NO-1NC
	A30	2NO
	A31	2NC
	A32	2NO-1NC
	A33	1NO-2NC
	A34	3NO

Table 16-130. A — Ammeters, Auxiliary Contacts, Accelerating Relays, Autotransformers (Continued)

Modification	Catalog Number Suffix	Description
Side Mounted Auxiliary Contacts, continued ③④	**A35**	3NC
	A36	3NO-1NC
	A37	2NO-2NC
	A38	1NO-3NC
	A39	4NO
	A40	4NC
Auxiliary Contacts ③	**A42**	Contacts Mounted on Operating Mechanism of Disconnect Switch, 1NO-1NC
	A43	Contacts Mounted on Operating Mechanism of Disconnect Switch, 2NO-2NC
	A44	With Auxiliary Contact Omitted
Accelerating Relay	**A46**	For 2-Speed
	A47	2NO/2NC 24V DC Auxiliary Relay — ***IT.*** Only

① Oversize enclosure will be provided for ***IT.*** Starters.
② Top mounted auxiliary contacts cannot be added to contactors in Box 1 (Type 1).
③ Not available for ***IT.*** Starters.
④ Available on ***XT*** Starters for 40A and greater only.

Table 16-131. B — Breaker Modifications, Backspin Timer, Undervoltage Release, Bell Alarm, Bus Choke

Modification	Catalog Number Suffix	Description
Breaker	**B1**	1NO-1NC Auxiliary Contact on Breaker
	B2	2NO-2NC Auxiliary Contacts on Breaker
	B3	Shunt Trip on Circuit Breaker — 48 – 127V AC or DC
	B4	Shunt Trip on Circuit Breaker — 9 – 24V AC or DC
	B5	Shunt Trip on Circuit Breaker — 208 – 380V AC
	B6	Shunt Trip on Circuit Breaker — 415 – 600V AC or 220 – 250V DC
	B8	Undervoltage Release for Breaker
	B9	Current Limiter Mounted to Breaker
	B10	Breaker — Order by Description
	B11	Thermal Magnetic Breaker
Backspin Timer	**B12**	180 Seconds
Undervoltage Release	**B13**	Undervoltage Release for Circuit Breaker — 208 – 240V AC
	B14	Undervoltage Release for Circuit Breaker — 380 – 480V AC
	B15	Undervoltage Release for Circuit Breaker — 525 – 600V AC
Bell Alarm	**B16**	Bell Alarm for Circuit Breaker
Bus Choke (MVX)	**B20**	DC Bus Choke, Open Core and Coil ⑤

⑤ A DC bus choke may be used in place of an AC line reactor for line harmonic current reduction and for power source exceeding 500 kVA. The DC bus choke will not provide any protection for line voltage unbalance or transients.

Table 16-132. C — Control Power Transformer, *IT.* Power Supplies, Control Relays, Cover Control (not elsewhere defined), Current Transformers, Compelling Relay, Control Wiring, Control Circuit Breaker, Separate Control, Customer-Supplied Components, Custom for Advantage, Contactors, Counter, E-Stop Relay, DC/AC Interface, Separate Source Disconnect, Bypass Contactors

Modification	Catalog Number Suffix	Description
Control Power Transformers Make sure 8th character specifies primary/ secondary voltage.	**C1**	Standard Size Control Transformer, 120V/60 Hz, 110V/50 Hz Secondary with 2 Primary and 1 Secondary Fuse
	C2	Standard Size Control Transformer, 24V/60 Hz Secondary with 2 Primary and 1 Secondary Fuse
	C42	50 VA Extra Capacity CPT 120V/60 Hz, 110V/50 Hz with 2 Primary and 1 Secondary
	C3	100 VA Extra Capacity CPT, 120V/60 Hz, 110V/50 Hz Secondary with 2 Primary and 1 Secondary Fuse
	C4	100 VA Extra Capacity CPT, 24V/60 Hz Secondary with 2 Primary and 1 Secondary Fuse
	C5	200 VA Extra Capacity CPT, 120V/60 Hz, 110V/50 Hz Secondary with 2 Primary and 1 Secondary Fuse
	C6	200 VA Extra Capacity CPT, 24V/60 Hz Secondary with 2 Primary and 1 Secondary Fuse
	C7	300 VA Extra Capacity CPT, 120V/60 Hz, 110V/50 Hz Secondary with 2 Primary and 1 Secondary Fuse
	C8	400 VA Extra Capacity CPT, 120V/60 Hz, 110V/50 Hz Secondary with 2 Primary and 1 Secondary Fuse
	C9	1 kVA Extra Capacity CPT, 120V/60 Hz, 110V/50 Hz Secondary with 2 Primary and 1 Secondary Fuse
	C10	2 kVA Extra Capacity CPT, 120V/60 Hz, 110V/50 Hz Secondary with 2 Primary and 1 Secondary Fuse
	C11	Control Transformer — Order by Description
	C34	CPT with Power Supply for ***IT.*** or ***XT***
Power Supplies (***IT.*** and ***XT*** Only)	**C27**	Separate Control 120V AC to 24V DC
	C28	Power Supply with Extra Capacity — Order by Description
Control Relays	**C12**	4-Pole Interposing Relay, 600V (2NO/2NC)
	C13	Run Relay, 24V DC (MVX)
	C14 ①	4-Pole, Unwired, A600 Rtg. — 2NO-2NC
	C15 ①	8-Pole, Unwired, A600 Rtg. — 4NO-4NC
	C16	Control Relay — Order by Description
	C18 ①②	3-Wire Control Module (C30 Lighting)
	C20 ①②	2-Wire Control Relay for Mechanical/ Magnetic Lighting Contactors
Cover Control	**C17** ①	Convert Position 7 to E30 Type Cover Control
	C19 ①	Lock-Off Attachment Added on Cover Control
	C29	Change to E22 (22 mm) Cover Controls

① Not available for ***IT.*** Starters.
② Not available for ***XT*** Starters.

Table 16-132. C — Control Power Transformer, *IT.* Power Supplies, Control Relays, Cover Control (not elsewhere defined), Current Transformers, Compelling Relay, Control Wiring, Control Circuit Breaker, Separate Control, Customer-Supplied Components, Custom for Advantage, Contactors, Counter, E-Stop Relay, DC/AC Interface, Separate Source Disconnect, Bypass Contactors (Continued)

Modification	Catalog Number Suffix	Description
Current Transformer(s)	**C21**	In Phase 1
	C22	In Phases 1 and 2
	C23	In 3 Phases
Compelling Relay	**C25** ③	—
Control Wiring	**C26**	Omit Control Wiring
	C30 ③	With Separate Control Wiring and Two 250V Fuses in Holder
	C31 ③	With Common Control Wiring and Two 600V (Class C) Fuses in Holder
	C33	Control Wiring Type — Order by Description
Control Circuit Breaker	**C32** ③	Order by Description
Separate Control	**C35**	Wired for Separate Control (Reduced Voltage)
Customer Supplied Components	**C36**	Customer Supplied Components to Be Installed
	C37	Customer Supplied Wiring Diagram to Use
Custom for Advantage	**C39**	Advantage+ Starter Supplied
Contactor/ Starter	**C40** ③	Contactor/Starter — Order by Description
Counter	**C41** ③	Operations Counter
E-Stop Relay	**C43** ③	E-Stop Relay (DeviceNet)
DC/AC Interface	**C44** ③⑥	DC/AC Interface Module
Separate Source Disconnect	**C45** ③	IEC Separate Source Disconnect for Control Circuitry
Bypass Contactors for ***IT.***/MVX Starters (MVX: 1/2 to 5 hp Only)	**C46/J1**	Isolation Contactor
	C46/J2	Output Contactor
	C46/J3	Bypass Contactor
	C46/J4	Isolation/Output/Bypass Contactor
	C46/J5	3-Contactor Bypass Pkg. for MVX ④

③ Not available for ***IT.*** Starters.
④ Includes CPT, Pilot Lights, Selector Switch, Auxiliary Contacts and Control Relay.
⑥ Not available for ***XT*** Starters.

Table 16-133. D — Device Labels, Deceleration Relay, Drain and Breather, Duplex Modifications

Modification	Catalog Number Suffix	Description
Device Labels	**D1**	(Each Label)
Decel. Relay ①	**D2**	2-Speed
Drain and Breather (Type 7/9 Enclosure) ①	**D5**	Drain and Breather
	D6	Drain Only
	D7	Breather Only
Duplex Modifications	**D12**	Alternator Omitted (Deduct Price)
	D14	START/STOP Pushbuttons — Supplied for Each Motor
	D15	HAND/OFF/AUTO Selector Switch — Supplied for Each Motor
	D16	No. 1 Lead - No. 2 Lead Selector Switch for Manual Selection of Lead Pump (Alternator is Omitted)
	D17	Red RUN Pilot Light — Supplied for Each Motor
	D18	Push-to-Test Red RUN Pilot Light — Supplied for Each Motor
	D19	TEST Pushbutton for Each Motor
	D20	CPT, 120V Secondary, 2 Pri. Fuses & 1 Sec. Fuse — Supplied for Ea. Motor
	D21	CPT w/100VA Extra Capacity, 120V Sec., 2 Pri. Fuses & 1 Sec. Fuse — Supplied for Each Motor
	D22	CPT w/200VA Extra Capacity, 120V Sec., 2 Pri. Fuses & 1 Sec. Fuse — Supplied for Each Motor
	D23	CPT for Duplex — Order by Description
	D24	Add 2 Relays to Modify Controller to Operate w/Single-Pole Pilot Devices
	D25	Add 3 Relays to Modify Controller to Operate w/Single-Pole Pilot Devices
	D26	Green — OFF for each starter
	D27	Green — Push-to-Test OFF for ea. starter

① Not available for ***IT.*** or ***XT*** Starters.

Table 16-134. E — Enclosure Modifications, Elapsed Time Meter, Duplex Outlet, Enclosure for Starter, Enclosure Clear Cover, Enclosure Material

Modification	Catalog Number Suffix	Description
Enclosure Modifications	**E3**	Oversize Enclosure
	E4	Enclosure — Order by Description
	E8	Service Entrance Rating w/Ground Bar
	E11	Safety Door Interlock
Elapsed Time Meter	**E9**	Wired Across Coil, Type 1, 12
		Wired Across Coil, Type 3R, 4X
	E10	Elapsed Time Meter — Order by Description
Duplex Outlet	**E12**	Convenience Duplex Outlet Mounted in Side of Enclosure
Enclosure for Starter ②	**E13**	Horizontal Combination Starter, Size 0 – 2
	E14	Narrow Combination Starter, Size 0 – 2
Enclosure Clear Cover for ***XT***	**E19**	Clear Cover for Halyester Enclosure Nonmetallic
Enclosure Material	**E20**	Convert to 316 Stainless Steel
	E21	Convert from Type 3R to Stainless Steel

② Not available for ***IT.*** or ***XT*** Starters.

Table 16-135. F — Fuse Clips, Fuse Blocks, Fungus Protection, Fingerproof Covers, EMI Filter

Modification	Catalog Number Suffix	Description
Fuse Clips ④	**F1**	Change Fuse Clips in Position 8 to Class J
	F2	Change Fuse Clips in Position 8 to Class H & K (30 & 60 Ampere Only)
Fuse Blocks	**F4**	Power Fuses Included — Order by Description
	F5	30 Ampere Control Circuit Fuseholder (KTK) Mounted on Panel (Unwired), Fuse Not Supplied
	F6	30 Ampere Control Circuit Fuseholder Mounted on Panel (Unwired), FNQR Fuse Supplied
	F7	3-Pole Power Fuseholder Mounted on Front Contactor
	F8	Separate Fusing of Control Power Supply — ***IT.***
	F10	Blown Fuse Indicator (Not for PFC)
	F21	Class CC Fuses
EMI Filter (MVX)	**F22**	3-Phase ③
	F23	1-Phase ③

③ The EMI filter is not necessary to meet the CE mark requirements for EMC when installing the MVX in an EC country.
④ Not available for ***XT*** Starters.

Table 16-136. G — Ground Fault Relay, Grounding

Modification	Catalog Number Suffix	Description
Ground Fault Relay	G1	Ground Fault Relay (Wired)
	G3	Ground Fault Relay (Unwired)
Grounding	G5	Special Grounding — Order by Description
	G6	Ground Fault Protection Omitted (Advantage)
	G7	Ground Fault Protection and Monitoring Panel

Table 16-137. H — Heater (Space), Heater Packs Installed

Modification	Catalog Number Suffix	Description	
Space Heater	H1	Space Heater and Thermostat	
	H2	Space Heater and NC Interlock	
Install Heater Packs (Freedom Series)	H5	**Class 20**	**Class 10**
		/D1 H2001B-3 /D2 H2002B-3 /D3 H2003B-3 /D4 H2004B-3 /D5 H2005B-3	/D25 H2101B-3 /D26 H2102B-3 /D27 H2103B-3 /D28 H2104B-3 /D29 H2105B-3
		/D6 H2006B-3 /D7 H2007B-3 /D8 H2008B-3 /D9 H2009B-3 /D10 H2010B-3	/D30 H2106B-3 /D31 H2107B-3 /D32 H2108B-3 /D33 H2109B-3 /D34 H2110B-3
		/D11 H2011B-3 /D12 H2012B-3 /D13 H2013B-3 /D14 H2014B-3 /D15 H2015B-3	/D35 H2111B-3 /D36 H2112B-3 /D37 H2113B-3 /D38 H2114B-3 /D39 H2115-3
		/D16 H2016B-3 /D17 H2017B-3 /D18 H2018-3 /D19 H2019-3 /D20 H2020-3	/D40 H2116-3 /D41 H2117-3
		/D21 H2021-3 /D22 H2022-3 /D23 H2023-3 /D24 H2024-3	

Table 16-138. K — MVX Keypad ①

Modification	Catalog Number Suffix	Description
Keypad (MVX)	K1	Door-Mounted AFD Keypad (Type 1 and 12)
	K2	Door-Mounted AFD Keypad (Type 3R)
	K3	AFD Copy Keypad (mounted on drive)
	K4	Door-Mounted AFD Copy Keypad (Type 1 and 12)
	K5	Door-Mounted AFD Copy Keypad (Type 3R)

① See **Tab 7** for more MVX Modifcations.

Table 16-139. L — Labels, Line and Load Reactors, Lighting Contactors

Modification	Catalog Number Suffix	Description
Carton Label	L10	Customer Marking — Specify
Line Reactors (MVX)	L12	3% Input Line Reactor, 3-Phase, Open Core and Coil ②
	L13	3% Input Line Reactor, 1-Phase, Open Core and Coil ②
	L14	5% Input Line Reactor, 3-Phase, Open Core and Coil ②
	L15	5% Input Line Reactor, 1-Phase, Open Core and Coil ②
	L16	Line Reactor — Order by Description
Load Reactors (MVX)	L17	Output Line DV/DT Filter, Open Core and Coil ③
	L18	Load Reactor — Order by Description
Lighting Contactors	L21	1 NC Pole
	L22	2 NC Pole
	L23	3 NC Pole
	L24	4 NC Pole
	L25	5 NC Pole
	L26	6 NC Pole
	L27	7 NC Pole
	L28	8 NC Pole
	L29A	3-Wire 120V AC
	L29B	3-Wire 240V AC
	L29C	3-Wire 24V AC
	L29D	3-Wire 24V DC
	L29E	2-Wire 120V AC
	L29F	2-Wire 240V AC
	L29G	2-Wire 24V AC

② If the power source exceeds 500 kVA, 3% line unbalance, or if transient voltages from power factor capacitor switching events are present, an input line reactor must be used. The input line reactor will also reduce line current harmonics.

③ The output line DV/DT filter is required when the distance from the drive to the motor exceeds 33 feet (10m). The total cable run should not exceed 165 feet (50m).

Table 16-140. N — Nameplates

Modification	Catalog Number Suffix	Description
Nameplates	N1	Enclosure Nameplates

Table 16-141. P — Pilot Lights, Pushbuttons, Phase Relays, Potential Transformers, Power Factor Correction Capacitors, Program Timer, Percentage Timer, Photocell

Modification	Catalog Number Suffix	Description
Push-to-Test Pilot Lights	P1	Push-to-Test Pilot Light (Red RUN) Wired to Coil
	P2	Push-to-Test Pilot Light (Green OFF) Wired in Series with Auxiliary Contact
	P3	Combination of **P1** and **P2** Above
	P4	Push-to-Test Pilot Light (Amber RUN) Wired to Coil
	P49	Push-to-Test Pilot Light (Green RUN)
	P54 ①	Push-to-Test Pilot Light — Red BYPASS (MVX)
	P56 ①	Push-to-Test Pilot Light — Amber INVERTER ENABLE (MVX)
	P57	Push-to-Test Pilot Light — Green STOP
Pushbuttons	P5	EMERGENCY STOP — Mushroom Head
	P6 ①	Pushbutton Omitted
	P7	START/STOP
	P8	ON/OFF
	P9	START
	P10	ON
	P11	OFF
	P12 ①	FORWARD/REVERSE/STOP
	P13 ①	FAST/SLOW/STOP
	P14 ①	FAST/OFF/SLOW
	P15 ①	HIGH/LOW/STOP
	P16 ①	HIGH/LOW
	P17 ①	SLOW/FAST
	P18 ①	Pushbutton with Legend Plate
	P52	UP/STOP/DOWN
	P53	OPEN/STOP/CLOSE
Pilot Lights	P19	With 1 Amber Pilot Light Marked POWER AVAILABLE Wired to Load Side of 2 Fuses or Circuit Breaker
	P20	Pilot Light (Amber RUN) Wired to Coil
	P21 ①	With 1 Red Pilot Light Marked RUN Wired thru NO Auxiliary Contact
	P22 ①	With 1 Push-to-Test Red Light Marked RUN Wired thru NO Auxiliary Contact
	P23	Pilot Light — Red RUN
	P24	Pilot Light — Red ON
	P25	Pilot Light — Green OFF
	P26	Pilot Light — Order by Description
	P29	Pilot Light — Red STOP

① Not available for ***IT.*** Starters.

Table 16-141. P — Pilot Lights, Pushbuttons, Phase Relays, Potential Transformers, Power Factor Correction Capacitors, Program Timer, Percentage Timer, Photocell (Continued)

Modification	Catalog Number Suffix	Description
Pilot Lights (Continued)	P58	Pilot Light — Red BYPASS (MVX)
	P59 ②	Pilot Light — Amber INVERTER ENABLE (MVX)
	P60 ②	Pilot Light — Red INVERTER RUNNING (MVX)
	P61	Pilot Light — Green STOP
	P62 ②	FORWARD/REVERSE Red Pilot Lights
	P63 ②	UP/DOWN Red Pilot Lights
	P64 ②	OPEN/CLOSE Red Pilot Lights
	P65 ②	HIGH/LOW Red Pilot Lights
	P66 ②	FAST/SLOW Red Pilot Lights
	P67	Green RUN Light
	P68	LED Bulbs
	P69	Blue OVERLOAD Light
Illuminated Pushbutton	P27	Illuminated Pushbutton — Order by Description
Phase Loss Relay	P28	Phase Loss Relay
	P36	Phase Loss Protection Omitted (Advantage)
	P37	Extended Phase Loss Trip Time (Advantage)
Phase Reversal Relay	P30	Phase Reversal Relay
Phase Unbalance Relay	P32	Phase Unbalance Relay
Phase Monitoring Relay	P34	Phase Monitoring Relay
Power Factor Correction Capacitors	P38	/F1 20 kVar /F2 25 kVar /F3 30 kVar /F4 35 kVar /F5 40 kVar /F6 45 kVar /F7 50 kVar /F8 60 kVar /F9 70 kVar /F10 75 kVar /F11 80 kVar /F12 90 kVar /F13 100 kVar /F14 125 kVar /F15 150 kVar /F16 175 kVar /F17 200 kVar /F18 225 kVar /F19 250 kVar /F20 300 kVar /F21 350 kVar /F22 400 kVar
Potential Transformers	P39 ②	Potential Transformer — Wired L1 – L2
	P40 ②	Potential Transformer — Wired L1– L2 and L2 – L3
	P41 ②	Potential Transformer — 3 Phases
Pump Controller	P42	Pump Controller for ***IT.***
Program Timers	P43	15-Minute Program Timer
	P44	24-Hour Program Timer
	P45	7-Day Program Timer with Day Omission Feature
Percentage Timers	P47	15-Minute Percentage Timer
	P48	60-Minute Percentage Timer
Photocell	P70 ②	Photoelectric Receptacle with Photocell

② Not available for ***IT.*** Starters.

Table 16-142. Q — IQ Products, DN50

Modification	Catalog Number Suffix	Description
IQ Products	**Q1**	IQ 500
	Q3	IQ 1000
	Q5	IQ 4000
	Q8	With Wponi (Advantage)
	Q9	With WCTLponi (Advantage)
IQ Data Metering Module	**Q12** ①	IQ Data Metering Module
	Q14	IQ 220 with Cable
DN50	**Q13** ①	DeviceNet Input/Output Module

① Not available for ***IT.*** Starters.

Table 16-143. R — Ramp, Relays, Solid-State Electronic Overload Relays, Resets, Overload Relay Modifications, Reversing, DeviceNet Interface

Modification	Catalog Number Suffix	Description	
Ramp	**R1**	Extended Ramp of ***IT.***	
Relay ②	**R2**	Overvoltage Relay	
Fixed Heater Overload Relay ③	**R8**	C316FNA3C	.25 – .40A
	R9	C316FNA3D	.40 – .63A
	R10	C316FNA3E	.63 – 1.00A
	R11	C316FNA3F	1.00 – 1.40A
	R12	C316FNA3G	1.30 – 1.80A
	R13	C316FNA3H	1.70 – 2.40A
	R14	C316FNA3J	2.20 – 3.10A
	R15	C316FNA3K	2.80 – 4.00A
	R16	C316FNA3L	3.50 – 5.00A
	R17	C316FNA3M	4.50 – 6.50A
	R18	C316FNA3N	6.00 – 8.50A
	R19	C316FNA3P	7.50 – 11.00A
	R20	C316FNA3Q	10.00 – 14.00A
	R21	C316FNA3R	13.00 – 19.00A
	R22	C316FNA3S	18.00 – 24.00A
	R23	C316FNA3T	24.00 – 32.00A
	R24	C316KNA3A	18.00 – 25.00A
	R25	C316KNA3B	22.00 – 32.00A
	R26	C316KNA3C	29.00 – 42.00A
	R27	C316KNA3D	36.00 – 52.00A
	R28	C316KNA3E	45.00 – 63.00A
	R29	C316KNA3F	60.00 – 80.00A
	R30	C316PNA3A	65.00 – 90.00A
	R31	C316PNA3B	80.00 – 100.00A
	R32	C316PNA3C	100.00 – 135.00A
	R33	C316PNA3D	110.00 – 150.00A
	R34	C316PNA3E	130.00 – 175.00A
	R35	C316PNA3F	150.00 – 200.00A
	R36	C316SNA3A	130.00 – 185.00A
	R37	C316SNA3B	165.00 – 235.00A
	R38	C316SNA3C	220.00 – 310.00A
	R39	C316SNA3D	285.00 – 400.00A
	R40	C316UNA3A	355.00 – 500.00A
	R41	C316UNA3B	465.00 – 650.00A
	R42	C316UNA3C	610.00 – 850.00A

② Not available for ***IT.*** Starters.
③ Not available for ***XT*** Starters.

Table 16-143. R — Ramp, Relays, Solid-State Electronic Overload Relays, Resets, Overload Relay Modifications, Reversing, DeviceNet Interface (Continued)

Modification	Catalog Number Suffix	Description		
Fixed Heater Overload Relay, continued ③	**R43**	Fixed Heater Overload Relay — Order by Description		
	R55	C316FNA3F w/Current Transformer		60.00 – 84.00 FLA
	R56	C316FNA3G w/Current Transformer		78.00 – 108.00 FLA
	R57	C316FNA3H w/Current Transformer		102.00 – 144.00 FLA
	R58	C316FNA3J w/Current Transformer		132.00 – 186.00 FLA
	R59	C316FNA3K w/Current Transformer		168.00 – 240.00 FLA
	R60	C316FNA3L w/Current Transformer		210.00 – 310.00 FLA
Solid-State Electronic Overload Relay ⑤	IEC Frame	NEMA Size	Full Load Current Adjustment Range (A)	3-Phase Automatic/ Manual Reset Class 5/10/20/30
	Catalog Number Suffix ➡ ⑥			**R61_**
	B & C	00	0.1 – 0.5 0.4 – 2.0 1.0 – 5.0 1.6 – 8.0	**A** **B** **C** **D**
	C & D	0 & 1	0.1 – 0.5 0.4 – 2.0 1.0 – 5.0 1.6 – 8.0 6.4 – 32	**A** **B** **C** **D** **E**
	D	2	9 – 45	**F**
		3	15 – 75	**G**
	F & G		22 – 110	**H**
	G	4	30 – 150	**J**
	N/A	5	96 – 300	**C**
	N/A	6	192 – 600	**C**
Resets ④	**R5**	Change External Reset to Internal Reset — Hole Covered with Plug		
	R6	Internal Reset — No Hole Plug		
	R44	Manual Reset Only on Overload Relay		
	R45	Auto Reset Only on Overload Relay		
	R47	Internal Trip Indicator — No External Reset		
	R48	External Reset with External Trip Indicator		
	R49	External Reset with Bell Alarm		
	R71	N3R Reset Boot Added (Type 1/12 Only)		
Reversing ④	**R54**	Reversing Contactor/Starter		
Overload Relay Mods	**R53**	Anti Plug-In		
	R61	C395 DNA DeviceNet Module		
	R62	C395 Bell Alarm		
	R63	C395 Load Module		
	R64	C395 Program Key		
DeviceNet Interface	**R69**	DeviceNet Interface		
	R65	Standard Reset for DeviceNet		
	R66	Lighted Reset for DeviceNet		
	R67	Trip Indicator for DeviceNet		
	R68	DeviceNet Communication Interface (MVX)		

④ Not available for ***IT.*** or ***XT*** Starters.
⑤ Features:
- Self-Powered
- Phase Loss Protection
- Current Adjustment Knob
- ± 1% Repeat Accuracy
- 1NO and 1NC Isolated Contacts

⑥ Complete Modification Code includes overload range. Example **R61/C**.

Table 16-144. S — System Voltage, Selector Switches, Suppressor, Incomplete Sequence Protection, Single-Phase Jumper, Surge Capacitor, Speed Potentiometer

Modification	Catalog Number Suffix	Description
System Voltage Selection	**S1**	System Voltage Selection for Internal Components /H1 208V 60 Hz /H2 240V 60 Hz /H3 277V 60 Hz, 1-Ph /H4 480V 60 Hz /H5 600V 60 Hz /H6 796V 60 Hz /H7 220V 50 Hz /H8 380V 50 Hz /H9 415V 50 Hz /H10 550V 50 Hz /H11 660V 50 Hz /H12 380V 60 Hz /H13 1500V 60 Hz
	S2	System Voltage Selection — Specify on Order
Selector Switches ①	**S3**	HAND/OFF/AUTO
	S4	HAND/AUTO
	S5	HAND/OFF/AUTO Selector Switch with 1 Red RUN Pilot Light
	S6	RUN/OFF/AUTO
	S7	AUTO/OFF/TEST
	S8	AUTO/OFF/TEST Selector Switch with 1 Red RUN Pilot Light
	S9	AUTO/OFF/TEST Selector Switch with 1 Red RUN Pilot Light and 1 Green Pilot Light
	S10	OFF/AUTO
	S11	START/STOP
	S12	OFF/ON
	S13 ②	HIGH/LOW
	S14 ②	FAST/OFF/SLOW
	S15 ②	SLOW/FAST
	S16 ②	FORWARD/REVERSE
	S17 ②	HIGH/OFF/LOW
	S18 ②	HIGH/LOW/OFF/AUTO
	S21	HAND/OFF/AUTO Spring Return from Left
	S38 ②	INVERTER/OFF/BYPASS (MVX)
	S41 ②	OPEN/OFF/CLOSE
	S42 ②	FORWARD/OFF/REVERSE
	S43 ②	FAST/OFF/SLOW/AUTO
	S19 ②	Selector Switch Omitted (Pump Panels Only)
	S40	Selector Switch — Order by Description
Suppressor	**S24** ②	Transient Suppressor Mounted on Magnet Coil
Surge Suppression	**S20**	MOV (***IT.***)
Sequence Timer	**S26** ②	Sequence Timer (Pump Panels)
Sequence Protection	**S27** ②	Incomplete Sequence Protection
Pump	**S28**	480V BP9000 Pump
Single Phase ②	**S29**	Convert Contactor or Starter from Three-Phase to Single-Phase — Install Jumper
	S30	Single-Phase Rev. 120V
	S31	Single-Phase Rev. 240V
Surge Capacitor	**S37** ②	Surge Capacitor Wired to Disconnect Line Side
Speed Potentiometer	**S39** ②	Speed Potentiometer (MVX)

① When using 3-position selector switch with magnetic lighting contactor, mod **C20** must also be used (ECL04, ECL13, ECL15).
② Not available for ***IT.*** Starters.

Table 16-145. T — Timers, Time Delay Relays, Terminal Blocks, Terminal Points, Ring Lug Connections

Modification	Catalog Number Suffix	Description
Timers	**T1** ③	Pneumatic Timer Installed on Contactor, Unwired, 30 Sec. Max.
	T2 ③	Pneumatic Timer Installed on Contactor, Unwired, 180 Sec. Max.
	T3	Pneumatic Timer Mounted in Enclosure, Unwired, 180 Sec. Max.
	T4	Solid-State ON Delay Timer (1 – 30 sec)
	T5	Solid-State ON Delay Timer (30 – 300 sec)
	T25	Timer — Order by Description
Time Delay Relays	**T6**	Time Delay Relay, 3 Minutes Maximum, Unwired, ON DELAY
	T7	Time Delay Relay, 3 Minutes Maximum, Unwired, OFF DELAY
	T8	Time Delay Low Voltage Release Relay
Terminal Blocks	**T9**	With 1 Single Circuit Terminal Block, Unwired
	T10	With 2 Single Circuit Terminal Block, Unwired
	T24 ③	Power Terminal Block for DeviceNet Overload
Terminal Points	**T11**	With 6 Terminal Points, Unwired
	T12	With 12 Terminal Points, Unwired
	T13	With 18 Terminal Points, Unwired
	T14	Terminal Point per Customer Specification, Unwired (Price Each)
	T15	Terminal Point per Customer Specification, Wired (Price Each)
	T21 ③	3 Terminals Mounted Between Contactor and Overload for Power Factor Capacitors — Sizes 0 – 2
	T22 ③	3 Terminals Mounted Between Contactor and Overload for Power Factor Capacitors — Sizes 3 – 4
	T23 ③	Quick-Connect Terminals Added to DP Contactor/Starter
Ring Lug Connections	**T16** ④	Ring Lug Connections on Power Wires
	T17 ③	Ring Lug Connections on Control Wires
IT./EM	**T30**	Reset Only
	T31	STOP with Reset
	T32	START/STOP with Reset
	T33A	HAND/OFF/AUTO with Reset 120V AC
	T33D	HAND/OFF/AUTO with Reset 24V DC
	T34	ON/OFF
	T40	Reset Only (DeviceNet)
	T41	STOP with Reset (DeviceNet)
	T42	START/STOP with Reset (DeviceNet)
	T43A	HAND/OFF/AUTO with Reset 120V AC (DeviceNet)
	T43D	HAND/OFF/AUTO with Reset 24V DC (DeviceNet)
	T44	ON/OFF
	T50	Reset Only
	T51	STOP with Reset
	T52	FORWARD/REVERSE/STOP with Reset
	T53A	FORWARD/REVERSE/STOP with Reset 120V AC
	T53D	FORWARD/REVERSE/STOP with Reset 24V DC
	T54	ON/OFF

③ Not available for ***IT.*** Starters.
④ Not available for ***XT*** Starters.

Table 16-145. T — Timers, Time Delay Relays, Terminal Blocks, Terminal Points, Ring Lug Connections (Continued)

Modification	Catalog Number Suffix	Description
IT/EM, continued	**T60**	Reset Only (DeviceNet)
	T61	STOP with Reset (DeviceNet)
	T62	FORWARD/REVERSE/STOP with Reset (DeviceNet)
	T63A	FORWARD/REVERSE/STOP with Reset 120V AC (DeviceNet)
	T63D	FORWARD/REVERSE/STOP with Reset 24V DC (DeviceNet)
	T64	ON/OFF
	T70	Reset Only
	T71	START/STOP with Reset
	T72	HAND/OFF/AUTO – START with Reset
	T73	FORWARD/REVERSE/STOP with Reset
	T74	HAND/OFF/AUTO – FORWARD/REVERSE with Reset
	T75	ON/OFF with Reset
	T76	FAST/SLOW/STOP with Reset
	T77	HAND/OFF/AUTO – FAST/SLOW with Reset

Table 16-146. U — Undervoltage Relay, Time Delay Undervoltage Relay

Modification	Catalog Number Suffix	Description
Undervoltage Relays	**U1**	Undervoltage Relay, Non-adjustable
	U2	Undervoltage Relay, Adjustable
Time Delay Undervoltage Relays	**U4** ①	Time Delay Undervoltage Relay, Non-adjustable
	U5	Time Delay Undervoltage Relay, Adjustable
Under- and Overvoltage Relay	**U7**	Under- and Overvoltage Relay

① Not available for *IT*. Starters.

Table 16-147. V — Voltmeter, Varmeter, Vacuum Starter

Modification	Catalog Number Suffix	Description
Voltmeters	**V1**	1 Panel Type Voltmeter Wired L1 – L2
	V2	Panel Type Voltmeter and Selector Switch Wired to Read Three Line Voltages
	V3 ②	Miniature Voltmeter Wired L1 – L2
	V4 ②	Miniature Voltmeter and Selector Switch Wired to Read Three Line Voltages
	V5	Switchboard Type Voltmeter Wired L1 – L2
	V6 ②	Switchboard Type Voltmeter and Selector Switch Wired to Read Three Line Voltage
	V7	3 Panel Type Voltmeters Wired in Each Phase
	V8 ②	3 Miniature Voltmeters Wired in Each Phase
	V9	3 Switchboard Type Voltmeters Wired in Each Phase
	V10	Voltmeter — Order by Description
Varmeter ③	**V11**	Varmeter
	V12	Varmeter — Order by Description
Vacuum Starter ③	**V13**	Vacuum Starter — 1500V Rating

② Type 1/12 only.
③ Not available for *XT* Starters.

Table 16-148. W — Wattmeter, Watt-Hour Meter, Wiremarkers, Wiring Diagram

Modification	Catalog Number Suffix	Description
Wattmeter ④	**W1**	Wattmeter
Watt-Hour Meter ④	**W3**	Watt-Hour Meter
	W5	Watt-Hour Meter with Demand Attachment
Wiremarkers	**W7**	Wiremarkers
	W8	Wiremarkers — Order per Customer Diagram or Specifications
	W9	Wiremarkers — Order by Description
WYE-Delta hp	**W10** ⑤	See **Pages 6-34 – 6-48**
Windows in Enclosure	**W11**	Enclosure Windows (MVX)
Wiring Diagram	**W12**	Reduced Copy of Custom Wiring Diagram Laminated on Inside of Door

④ Type 1/12 only.
⑤ Not available for *XT* Starters.

Renewal Parts

Contents

Description — *Page*

NEMA Contactors and Starters
- *IT.* Line 17-2
- Freedom Line 17-4
- Advantage Line 17-7
- A200 Line 17-8

IEC Contactors and Starters
- *XT* Line 17-13
- *IT.* Line 17-14
- Freedom Line 17-16

Lighting Contactors 17-20

NEMA Vacuum Break Contactors and Starters 17-22

Contact Kits

NEMA Contact Block

Table 17-1. NEMA Contact Block

Size	Amperes	Catalog Number
00	9	N04NBSAX3N
0	18	N04NBS0X3N
1	27	N04NCS1X3N
2	45	N04NDS2X3N
3	90	N04NES3X3N
4	135	N04NES4X3N

NEMA Coil Controller

Size 00-1 Non-reversing (pictured)

Table 17-2. NEMA Coil Controller

Size	Catalog Number
Non-reversing	
00, 0	N02NBXCXNN
1	N02NCXCXNN
2	N02NDXCXNN
3, 4	N02NEXCXNN
5	EMUCCF
Reversing	
00, 0	N03NBXCXNN
1	N03NCXCXNN
2	N03NDXCXNN
3, 4	N03NEXCXNN
5	EMUCCF

Coils

Table 17-3. 24V DC Coils

Description	Catalog Number
Size 00, 0 Coil	EMCB
Size 1 Coil	EMCC
Size 2 Coil	EMCD
Size 3, 4 Coil	EMCE
Size 5 Coil	EMCF

NEMA Solid-State Overload Relay

Table 17-4. NEMA Solid-State Overload Relay

Size	Overload Adjustment Range (Amperes)	Catalog Number
Non-reversing		
00, 0	.25 – .8	N05NBXRA3A
	.59 – 1.9	N05NBXRB3A
	1.4 – 4.4	N05NBXRC3A
	2.8 – 9.0	N05NBXRD3A
	6.3 – 20	N05NBXRG3A
0	10 – 32	N05NBXRJ3A
1	.25 – .8	N05NCXRA3A
	.59 – 1.9	N05NCXRB3A
	1.4 – 4.4	N05NCXRC3A
	2.8 – 9.0	N05NCXRD3A
	5.0 – 16	N05NCXRF3A
	8.4 – 27	N05NCXRH3A
	16 – 50	N05NCXRL3A
2	5.0 – 16	N05NDXRF3A
	8.4 – 27	N05NDXRH3A
	14 – 45	N05NDXRK3A
	31 – 100	N05NDXRN3A
3, 4	14 – 45	N05NEXRK3A
	28 – 90	N05NEXRM3A
	42 – 135	N05NEXRP3A
4	63 – 200	N05NEXRR3A
5	42 – 135	N05NFXRP3A
	84 – 270	N05NFXRS3A
	131 – 420	N05NFXRT3A
Reversing		
00, 0	.25 – .8	N06NBXRA3A
	.59 – 1.9	N06NBXRB3A
	1.4 – 4.4	N06NBXRC3A
	2.8 – 9.0	N06NBXRD3A
	6.3 – 20	N06NBXRG3A
0	10 – 32	N06NBXRJ3A
1	.25 – .8	N06NCXRA3A
	.59 – 1.9	N06NCXRB3A
	1.4 – 4.4	N06NCXRC3A
	2.8 – 9.0	N06NCXRD3A
	5.0 – 16	N06NCXRF3A
	8.4 – 27	N06NCXRH3A
	16 – 50	N06NCXRL3A
2	5.0 – 16	N06NDXRF3A
	8.4 – 27	N06NDXRH3A
	14 – 45	N06NDXRK3A
	31 – 100	N06NDXRN3A
3, 4	14 – 45	N06NEXRK3A
	28 – 90	N06NEXRM3A
	42 – 135	N06NEXRP3A
4	63 – 200	N06NEXRR3A
5	42 – 135	N06NFXRP3A
	84 – 270	N06NFXRS3A
	131 – 420	N06NFXRT3A

Contact Kits

Table 17-5. NEMA 3-Pole Contact Kits

Size	Description	Catalog Number
1	Hold Open Non Hold Open	**EMCKTS1** **EMCKTS1NH**
2	Hold Open Non Hold Open	**EMCKTS2** **EMCKTS2NH**
3	Hold Open	**EMCKTS3**
4	Hold Open	**EMCKTS4**
5	Hold Open	**EMCKTS5**

Fanning Strips

Table 17-6. Reversing Fanning Strips

NEMA Size	Description	Catalog Number
00,0	Line Side Load side	**EMFRLB** **EMFRTB**
1	Line Side Load side	**EMFRLC** **EMFRTC**
2	Line Side Load side	**EMFRLD** **EMFRTD**
3, 4	Line Side Load side	**EMFRLE** **EMFRTE**
5	Line Side Bus Bar Set Load side Bus Bar Set	**EMFRLF** **EMFRTF**

Lug Kits and Reversing Kits

For Lug Kits and Reversing Kits, see Accessories, **Page 16-3**.

NEMA Sizes 00, 0, 1, 2 and 3

Table 17-7. NEMA Sizes 00 and 0 — See Contactor/Starter Nameplate to Determine Series A1, B1 or C1.

Description		NEMA Size 00-0	NEMA Size 00		NEMA Size 0	
		Series A1	Series B1	Series C1	Series B1	Series C1
		Part Number	Part Number	Part Number	Part Number	Part Number
Renewal Parts Publication Number		None	None	None	None	None
Contact Kits						
2-Pole		①	①	①	①	①
3-Pole		①	①	①	①	①
4-Pole		①	①	①	①	①
5-Pole		①	①	①	①	①
Magnet Coils	**Coil Suffix**					
120V 60 Hz or 110V 50 Hz	A	9-2650-1	9-2875-1	9-2875-1	9-2876-1	9-2876-1
240V 60 Hz or 220V 50 Hz	B	9-2650-2	9-2875-2	9-2875-2	9-2876-2	9-2876-2
480V 60 Hz or 440V 50 Hz	C	9-2650-3	9-2875-3	9-2875-3	9-2876-3	9-2876-3
600V 60 Hz or 550V 50 Hz	D	9-2650-4	9-2875-4	9-2875-4	9-2876-4	9-2876-4
208V 60 Hz	E	9-2650-5	9-2875-5	9-2875-5	9-2876-5	9-2876-5
277V 60 Hz	H	9-2650-13	9-2875-12	9-2875-12	9-2876-12	9-2876-12
208/240V 60 Hz	J	—	9-2875-37	9-2875-37	9-2876-17	9-2876-17
240V 50 Hz	K	9-2650-12	9-2875-11	9-2875-11	9-2876-11	9-2876-11
380 – 415V 50 Hz	L	9-2650-6	9-2875-6	9-2875-6	9-2876-6	9-2876-6
380V 50 Hz	L	—	—	—	—	—
415V 50 Hz	M	—	—	—	—	—
550V 50 Hz	N	—	—	—	—	—
24V 60 Hz – 24V 50 Hz	T	—	9-2875-36	9-2875-36	9-2876-36	9-2876-36
24V 60 Hz	T	9-2650-7	—	—	—	—
24V 50 Hz	U	9-2650-14	9-2875-36	9-2875-36	9-2876-36	9-2876-36
32V 50 Hz	V	9-2650-9	9-2875-16	9-2875-16	9-2876-16	9-2876-16
48V 60 Hz	W	9-2650-8	9-2875-8	9-2875-8	9-2876-8	9-2876-8
48V 50 Hz	Y	9-2650-10	9-2875-9	9-2875-9	9-2876-9	9-2876-9
Magnet Frame Armature						
Lower Magnet Frame		①	①	①	①	①
Upper Magnet Frame		①	①	①	①	①

① Replace with complete contactor.

Table 17-8. NEMA Sizes 1, 2 and 3 — See Contactor/Starter Nameplate to Determine Series A1 or B1.

Description		NEMA Size 1		NEMA Size 2		NEMA Size 3
		Series A1	Series B1	Series A1	Series B1	
		Part Number	Part Number	Part Number	Part Number	Part Number
Renewal Parts Publication Number		20861	22177	20861	22177	20426
Contact Kits						
2-Pole		6-65	6-65	6-65-7	6-65-7	6-43-5
3-Pole		6-65-2	6-65-2	6-65-8	6-65-8	6-43-6
4-Pole		6-65-9	6-65-9	6-65-15	6-65-15	—
5-Pole		6-65-10	6-65-10	6-65-16	6-65-16	—
Magnet Coils	**Coil Suffix**					
120V 60 Hz or 110V 50 Hz	A	9-2703-1	9-2703-1	9-2703-1	9-2703-1	9-2756-1
240V 60 Hz or 220V 50 Hz	B	9-2703-2	9-2703-2	9-2703-2	9-2703-2	9-2756-2
480V 60 Hz or 440V 50 Hz	C	9-2703-3	9-2703-3	9-2703-3	9-2703-3	9-2756-3
600V 60 Hz or 550V 50 Hz	D	9-2703-4	9-2703-4	9-2703-4	9-2703-4	9-2756-4
208V 60 Hz	E	9-2703-9	9-2703-9	9-2703-9	9-2703-9	9-2756-5
277V 60 Hz	H	9-2703-7	9-2703-7	9-2703-7	9-2703-7	9-2756-9
208/240V 60 Hz	J	—	—	—	—	—
240V 50 Hz	K	9-2703-14	9-2703-14	9-2703-14	9-2703-14	9-2756-13
380 – 415V 50 Hz	L	9-2703-8	9-2703-8	9-2703-8	9-2703-8	—
380V 50 Hz	L	—	—	—	—	9-2756-12
415V 50 Hz	M	—	—	—	—	9-2756-8
550V 50 Hz	N	—	—	—	—	9-2756-14
24V 60 Hz – 24V 50 Hz	T	—	—	—	—	—
24V 60 Hz	T	9-2703-6	9-2703-6	9-2703-6	9-2703-6	9-2756-6
24V 50 Hz	U	9-2703-12	9-2703-12	9-2703-12	9-2703-12	9-2756-11
32V 50 Hz	V	9-2703-10	9-2703-10	9-2703-10	9-2703-10	9-2756-10
48V 60 Hz	W	9-2703-11	9-2703-11	9-2703-11	9-2703-11	9-2756-15
48V 50 Hz	Y	9-2703-13	9-2703-13	9-2703-13	9-2703-13	9-2756-7
Magnet Frame Armature						
Lower Magnet Frame		17-18200	17-18200	17-18200	17-18200	17-8955-2
Upper Magnet Frame		48-1936	48-1936	48-1936	48-1936	48-1902

NEMA Sizes 4, 5 and 6

Table 17-9. NEMA Sizes 4, 5 and 6 — See Contactor/Starter Nameplate to Determine Series A1 or B1.

Description		NEMA Size 4		NEMA Size 5		NEMA Size 6	
		Series A1	Series B1	Series A1	Series B1	Contactor & Starter Series A1, Starter Series B1	Contactor Series B1, Starter Series C1
		Part Number	Part Number	Part Number	Part Number	Part Number	Part Number
Renewal Parts Publication Number		20428	20428	20429	20429	20146	23349
Contact Kits							
2-Pole		6-44	6-26	6-45	6-45	6-601-2	—
3-Pole		6-44-2	6-26-2	6-45-2	6-45-2	6-601	6-648
Magnet Coils	**Coil Suffix**						
120V 60 Hz or 110V 50 Hz	A	9-1891-1	9-1891-1	9-1891-1	9-1891-1	9-2698	9-3006
240V 60 Hz or 220V 50 Hz	B	9-1891-2	9-1891-2	9-1891-2	9-1891-2	9-2698-2	9-3006-2
480V 60 Hz or 440V 50 Hz	C	9-1891-3	9-1891-3	9-1891-3	9-1891-3	9-2698-3	9-3006-3
600V 60 Hz or 550V 50 Hz	D	9-1891-4	9-1891-4	9-1891-4	9-1891-4	9-2698-4	9-3006-4
208V 60 Hz	E	9-1891-13	9-1891-13	9-1891-13	9-1891-13	9-2698-5	—
277V 60 Hz	H	9-1891-26	9-1891-26	9-1891-26	9-1891-26	—	—
208/240V 60 Hz	J	—	—	—	—	—	—
240V 50 Hz	K	9-1891-20	9-1891-20	9-1891-20	9-1891-20	—	—
380 – 415V 50 Hz	L	—	—	—	—	9-2698-6	9-3006-7
380V 50 Hz	L	9-1891-14	9-1891-14	9-1891-14	9-1891-14	—	—
415V 50 Hz	M	9-1891-21	9-1891-21	9-1891-21	9-1891-21	—	—
550V 50 Hz	N	9-1891-8	9-1891-8	9-1891-8	9-1891-8	—	—
24V 60 Hz – 24V 50 Hz	T	—	—	—	—	—	9-3006-8
24V 60 Hz	T	9-1891-15	9-1891-15	9-1891-15	9-1891-15	—	—
24V 50 Hz	U	9-1891-16	9-1891-16	9-1891-16	9-1891-16	—	—
32V 50 Hz	V	9-1891-27	9-1891-27	9-1891-27	9-1891-27	—	—
48V 60 Hz	W	—	—	—	—	9-2698-8	9-3006-9
48V 50 Hz	Y	9-1891-18	9-1891-18	9-1891-18	9-1891-18	—	—
Overload Relays							
For Replacement on Existing Starters 3-Pole — Ambient Compensated Bimetallic		10-6530-4	10-6530-4	C306DN3B	C306DN3B	C306DN3B	C306DN3B
Current Transformer							
		—	—	42-3564	42-3564	42-3598	42-3598
Magnet Frame Armature							
Lower Magnet Frame		48-1030-2	48-1030-2	48-1030-2	48-1030-2	—	—
Upper Magnet Frame		48-1029-4	48-1029-4	48-1029-4	48-1029-4	—	—
Feeder Group Renewal ①							
Volts	**Hertz**	NEMA Size 4		NEMA Size 5		NEMA Size 6	
		Series A1	Series B1	Series A1	Series B1	Contactor & Starter Series A1, Starter Series B1	Contactor Series B1, Starter Series C1
110 – 120	50/60	—	—	—	—	9-2705	9-3007
220 – 240	50/60	—	—	—	—	9-2705-2	9-3007-2
440 – 480	50/60	—	—	—	—	9-2705-3	9-3007-3
550 – 600	50/60	—	—	—	—	9-2705-4	9-3007-4
208	50/60	—	—	—	—	9-2705-5	9-3007-5
380 – 415	50/60	—	—	—	—	9-2705-6	9-3007-7
48 – 52	50/60	—	—	—	—	9-2705-8	9-3007-6

① Voltage ratings of the main coils must match those of the feeder group for proper operation of the starter/contactor.

NEMA Sizes 7 and 8

Table 17-10. NEMA Sizes 7 and 8 — See Contactor/Starter Nameplate to Determine Series A1 or B1.

Description		NEMA Size 7		NEMA Size 8	
		Series A1	Series B1	Series A1	Series B1
		Part Number	Part Number	Part Number	Part Number
Renewal Parts Publication Number		20848	20848	20849	20849
Contact Kits					
2-Pole		—	—	—	—
3-Pole		6-613	6-613	6-571	6-571
Magnet Coils	**Coil Suffix**				
120V 60 Hz or 110V 50 Hz	A	9-2698	9-2698	9-2654	9-2654
240V 60 Hz or 220V 50 Hz	B	9-2698-2	9-2698-2	9-2654-2	9-2654-2
480V 60 Hz or 440V 50 Hz	C	9-2698-3	9-2698-3	9-2654-3	9-2654-3
600V 60 Hz or 550V 50 Hz	D	9-2698-4	9-2698-4	9-2654-4	9-2654-4
208V 60 Hz	E	9-2698-5	9-2698-5	9-2654-6	9-2654-6
277V 60 Hz	H	—	—	—	—
208/240V 60 Hz	J	—	—	—	—
240V 50 Hz	K	—	—	—	—
380 – 415V 50 Hz	L	—	—	—	—
380V 50 Hz	L	9-2698-6	9-2698-6	9-2654-5	9-2654-5
415V 50 Hz	M	—	—	—	—
550V 50 Hz	N	—	—	—	—
24V 60 Hz – 24V 50 Hz	T	—	—	—	—
24V 60 Hz	T	—	—	—	—
24V 50 Hz	U	—	—	—	—
32V 50 Hz	V	—	—	—	—
48V 60 Hz	W	—	—	—	—
48V 50 Hz	Y	—	—	—	—
Overload Relays					
For Replacement on Existing Starters 3-Pole — Ambient Compensated Bimetallic		C306DN3B	C306DN3B	C306DN3B	C306DN3B
Current Transformer					
		42-3598-2	42-3598-2	42-3598-3	42-3598-3
Magnet Frame Armature ①					
Lower Magnet Frame		—	—	—	—
Upper Magnet Frame		—	—	—	—
Feeder Group Renewal ②					
Volts	**Hertz**	NEMA Size 7		NEMA Size 8	
		Series A1	Series B1	Series A1	Series B1
110 – 120	50/60	9-2705	9-2705	—	—
220 – 240	50/60	9-2705-2	9-2705-2	—	—
440 – 480	50/60	9-2705-3	9-2705-3	—	—
550 – 600	50/60	9-2705-4	9-2705-4	—	—
208	50/60	9-2705-5	9-2705-5	—	—
380 – 415	50/60	9-2705-6	9-2705-6	—	—
48 – 52	50/60	9-2705-8	9-2705-8	—	—
120	50/60	—	—	9-2664	9-2664
240	50/60	—	—	9-2664-2	9-2664-2
480	50/60	—	—	9-2664-3	9-2664-3
600	50/60	—	—	9-2664-4	9-2664-4
380	50/60	—	—	9-2664-5	9-2664-5
208	50/60	—	—	9-2664-6	9-2664-6
416	50/60	—	—	9-2664-7	9-2664-7
110	50/60	—	—	9-2664-8	9-2664-8
220	50/60	—	—	9-2664-9	9-2664-9
550	50/60	—	—	9-2664-10	9-2664-10
440	50/60	—	—	9-2664-11	9-2664-11

① Consult factory.
② Voltage ratings of the main coils must match those of the feeder group for proper operation of the starter/contactor.

Contact Kits and Coils

Table 17-11. Replacements for Contact Kits and Coils

Product	Description	Catalog Number
Contact Kits	Replacement Contact Kit, Size 1, 3-Pole Replacement Contact Kit, Size 2, 3-Pole Replacement Contact Kit, Size 3, 3-Pole Replacement Contact Kit, Size 4, 3-Pole Replacement Contact Kit, Size 5, 3-Pole Replacement Contact Kit, Size 6, 3-Pole	**WCK13** **WCK23** **WCK33** **WCK43** **WCK53** **WCK63**
Coils	Size 1 and 2, 110/120V 60 Hz Size 3 and 4, 110/120V 60 Hz Size 5 and 6, 110/120V 60 Hz	**WCOIL12F** **WCOIL34F** **WCOIL56F**

When Ordering Specify

Use this renewal parts data to identify device by style number, catalog number and/or description.

Select style number of replacement part from the following pages.

For clarification of ordering procedure, pricing and discounts, contact the Customer Support Center.

General Information

This renewal parts data will provide the proper identification of standard parts which may be required for maintenance of Eaton's Cutler-Hammer components.

It is the intent of this catalog section to make it possible to quickly select the parts needed.

An investment in renewal parts and regular maintenance program will protect against downtime and ensure a proper duty cycle for your equipment.

To maintain maximum operating efficiency and dependability of your equipment, only genuine Cutler-Hammer replacement parts should be used.

This section identifies the replacements parts which are available. Order by style number.

JF Autostarters

Table 17-12. JF Autostarter Kits

Frame Size	Start Contacts		Run Contacts		Grid Stack Kit	
	Required	Style Number	Required	Style Number	Required	Style Number
2 – 3	1	**38A7018G12**	1	**38A7018G13**	1	**3354D90G10**
4 – 5 5L	1	**550D409G18**	1	**550D409G19**	1	**3354D90G10**
5M – 5MM	1	**3354D90G08**	1	**3354D90G09**	2	**3354D90G10**

Note: Kits contain a complete set of moving contacts, stationary contacts and springs.

Table 17-13. Solenoid Assembly with Coil (All Sizes) ①

Volt	Hz	Style Number ②
115	60	**5264C05H01**
230	60	**5264C05H02**
460	60	**5264C05H03**
575	60	**5264C05H04**

① When replacing solenoid assembly series 416C160 use adapter plate style 9917D02H01 — 1 required.

② These styles replace coil style 296B892G__. When ordering new style as replacement, customer must order adapter plate 9917D02H01, Quantity 1 required.

AC Starters, Contactors A200, A201

Table 17-14. AC Contactors Model J Sizes 00, 0, 1, 2 Kits ①

Part	Poles	Size 00	Size 0	Size 1	Size 2
		Style Number	Style Number	Style Number	Style Number
Contact Kit	2 3 4 5	373B331G17 373B331G18 373B331G18 373B331G19	373B331G02 373B331G04 373B331G04 373B331G05	373B331G07 373B331G09 373B331G09 373B331G10	373B331G11 373B331G12 373B331G13 ③
Arc Box ②	2, 3, 4 5	6714C74G01 6714C74G04	6714C74G02 6714C74G05	6714C74G03 6714C74G06	6714C74G07 ④ 6714C74G08 ⑤
Cross Bar	2, 3 4, 5	N/A N/A	N/A N/A	N/A N/A	672B788G32 672B788G34
Upper Base (for single rated coils only)	2, 3 4, 5	N/A N/A	N/A N/A	N/A N/A	672B788G33 672B788G35
Lower Base	2, 3 4, 5	N/A N/A	N/A N/A	N/A N/A	1250C33G09 1250C33G05
KO Spring (Pk of 10)	All	N/A	N/A	N/A	503C796G01
Terminal Line/Load (Pk of 3)	All	N/A	N/A	N/A	371B870G03

① Model C contact tips and coils 00-4, 2-, 3-, 4- and 5-pole contactors are same as Model J. All other parts are unavailable.
② Mounting hardware included.
③ Use one each of 373B331G11 and 373B331G12.
④ 2-, 3-pole.
⑤ 4-, 5-pole.

Table 17-15. AC Coils

Voltage	Hz	Size 00, 0, 1		Size 2	
		2-, 3-, 4-Pole	5-Pole	2-, 3-Pole	4-, 5-Pole
		Style Number	Style Number	Style Number	Style Number
120/110	60/50	505C806G01	505C808G01	505C806G01	505C818G01
208	60	505C806G02	505C808G02	505C806G02	505C818G02
600/550	60/50	505C806G05	505C808G05	505C806G05	505C818G05
380	50	505C806G07	505C808G07	505C806G07	505C818G07
240/220	60/50	505C806G12	505C808G12	505C806G12	505C818G12
480/440	60/50	505C806G13	505C808G13	505C806G13	505C818G13
24	60	505C806G16	N/A	505C806G16	505C818G15
277	60	505C806G18	505C808G16	505C806G18	505C818G16
240/480 ⑥	60/60	505C806G03	505C808G03	505C806G03	505C818G03
120/240 ⑦	60/60	505C806G10	505C808G10	505C806G10	505C818G10

⑥ Dual Voltage Coils. Use only on contactors or starters originally supplied with a dual voltage coil.
⑦ Use only on contactors originally supplied with a DC coil.

Table 17-16. DC Coil ⑨

Voltage	Size 0, 1	Size 2
	1, 2, 3, 4 Pole	1, 2, 3 Pole
	Style Number	
12	1268C86G07	
24	1268C86G04	
48	1268C86G05	
125	1268C86G02	
250	1268C86G01	
125/250 ⑧	1268C86G03	

⑧ Dual Voltage Coils. Use only on contactors or starters originally supplied with a dual voltage coil.
⑨ Use only on contactors originally supplied with a DC coil.

Accessories for Size 5 – 9 AC Contactors

Note: A rectifier circuit converts the AC supply to DC supply. This conversion provides pick up and drop out characteristics. All necessary parts are included in the kit.

Table 17-17. AC-DC Coil Conversion Kits

Voltage	Size 5	Size 6
	Style Number	Style Number
120V AC	7864A28G01	7864A29G01
240V AC	7864A28G02	7864A29G02
480V AC	7864A28G03	7864A29G03

Table 17-18. Replacement Coils for Above

Voltage	Size 5	Size 6
	Style Number	Style Number
120V AC	7856A15G05	7856A16G05
240V AC	7856A15G10	7856A16G10
480V AC	7856A15G15	7856A16G15

AC Starters, Contactors A200, A201 (Continued)

Accessories for Size 5 – 9 AC Contactors

Table 17-19. Auxiliary Electrical Interlocks Size 7 – 9 AC and All DC Units

Type	Circuits	Application	Style Number
L63	NO	Size 7 – 8	578D461G01
L63	NC	Size 7 – 8	578D461G03
L64	NO-NC	Size 9	843D943G04
L64	2NO	Size 9	843D943G05
L64	2NC	Size 9	843D943G06

Accessories for Size 00 – 6 AC Contactors

Table 17-20. Auxiliary Electrical Interlocks

Catalog Number (Obsolete)	Style Number (Obsolete)	Circuits	Catalog Number Current	Style Number Current
(L-56)	(2609D01G01)	1NO & 1NC 2NO	J11	9084A17G01
(L-56D) (L-56E)	(2609D01G02) (2609D01G03)	1NO & 1NC 2NO 2NO	J20 J11	9084A17G02 9084A17G01
(L-56B) (L-56H)	(2609D01G04) (2609D01G05)		J20 J20	9084A17G02 9084A17G02
(L-56J)	(2609D01G06)	1NO & 1NC DB	J1C	9084A17G04
(L-56A) (L-56B) (L-56F) (L-56G)	(2609D01G07) (2609D01G08) (2609D01G09) (2609D01G10)	N/A N/A N/A 1NO & 1NC DB	N/A N/A N/A J1C	N/A N/A N/A 9084A17G04
(L-56C) (L-56M) (L-56P)	(2609D01G11) (2609D01G12) (2609D01G17)	2NC N/A 1NO & 1NC 2NC	J02 N/A J11	9084A17G03 N/A 9084A17G01
(L-56R) (L-56S)	(2609D01G18) (2609D01G19)	1NO & 1NC	J02 J11	9084A17G03 9084A17G01

17

Model J – K, Sizes 3 and 4

Table 17-21. Model J – K Series 3, 4 Kits ①

Part	Poles	Size 3 – Model J	Size 4 – Model J ③	Size 4 – Model K ②
		Style Number	Style Number	Style Number
Contact Kit	2 3 4 5	626B187G12 626B187G13 ④ ⑤	626B187G16 626B187G17 ⑥ ⑦	5250C81G16 5250C81G17 5250C81G18 5250C81G19
Arc Box	2, 3 4, 5	6714C74G09 6714C74G10	6714C74G11 6714C74G12	6714C74G11 6714C74G12
Cross Bar	2, 3 4, 5	672B788G36 672B788G38	672B788G36 672B788G38	672B788G40
Upper Base	2, 3 4, 5	672B788G37 672B788G39	672B788G37 672B788G39	672B788G52
Lower Base	2, 3 4, 5	1250C33G03 1250C33G06	1250C33G03 1250C33G06	1250C33G10
KO Spring (Pk of 10)	All	503C796G02	503C796G02	672B788G50
Terminal Line/Load (Pk of 3)	All	372B357G12	372B357G18	372B357G18

① Model C contact tips and coils 00-4, 2-, 3-, 4- and 5-pole contactors are same as model J. All other parts are unavailable.
② Model K replaces Model J, offering superior design life characteristics. Renewal parts are different. Use parts for proper model only.
③ For 200 Amp A202 Magnetically Latched Lighting Contactors order 3-pole contact kit style 672B788G07.
④ Use Qty. 2 of 626B187G12.
⑤ Use Qty. 1 each of 626B187G12 and 626B187G13.
⑥ Use Qty. 2 of 626B187G16.
⑦ Use Qty. 1 each of 626B187G16 and 626B187G17.

AC Starters, Contactors A200, A201 (Continued)

Accessories for Model J – K, Series 3, 4

Table 17-22. DC Coils ①

Voltage	Model J Size 3, 4
	2-, 3-Pole
	Style Number
24	1255C68G04
48	1255C68G05
125	1255C68G01
250	1255C68G02
125/250 ②	1255C68G03

① Use only on units originally supplied with DC coil.
② Dual Voltage Coils. Use only on contactors or starters originally supplied with dual voltage coil.

Table 17-23. AC Coils

Voltage	Hz	Model J Size 3, 4		Model K Size 4 ③	
		2-, 3-Pole	4-, 5-Pole	2-, 3-Pole	4-, 5-Pole
		Style Number	Style Number	Style Number	Style Number
120/110	60/50	505C633G01	505C635G01	5250C79G01	5250C80G01
208	60	505C633G02	505C635G02	5250C79G02	5250C80G02
600/550	60/50	505C633G05	505C635G05	5250C79G05	5250C80G05
380	50	505C633G07	505C635G07	5250C79G07	5250C80G07
240/220	60/50	505C633G12	505C635G12	5250C79G12	5250C80G12
480/440	60/50	505C633G13	505C635G13	5250C79G13	5250C80G13
24	60	505C633G34	N/A	5250C79G34	N/ A
277	60	505C633G14	N/A	5250C79G14	N/ A
240/480 ④	60/60	505C633G03	505C635G03	5250C79G03	5250C80G03
120/244 ④	60/60	505C633G10	505C635G10	5250C79G10	5250C80G10

③ Model K replaces Model J, offering superior design life characteristics. Renewal parts are different. Use parts for proper model only.
④ Dual Voltage Coils. Use only on contactors or starters originally supplied with dual voltage coil.

A201 Contactors — Size 5 – 9

Table 17-24. GCA 530/630 — GPD 7, 8, 9 Kits ⑤

Part	Size 5	Size 6	Size 7	Size 8	Size 9
	Style Number	Style Number	Style Number	Style Number	Style Number
Contact Kit (1 per pole)	477B477G05 ⑥	2066A10G11	461A757G17	646C829G05	5264C42G01 ⑨ 5264C42G02 ⑩
Arc Box	2050A15G45	2066A10G45	831D580G01	831D580G01	9917D69G02
Magnet Assy.	2050A15G46	2050A15G46	N/A	N/A	N/A
Mag. Spg. Kit	2050A15G47	2050A15G47	N/A	N/A	N/A
Acr Cup Kit	2050A15G48	N/A	N/A	N/A	N/A
Load Conn. Kit	2050A15G49	2066A10G49	N/A	N/A	N/A
Line Conn. Kit	2050A15G50	2066A10G50	N/A	N/A	N/A
K.O. Spring – 6	2050A15G51	2066A10G46	N/A	N/A	N/A
C.T. 300/5	655C285H03	N/A	N/A	N/A	N/A
C.T. 400/5	655C285H04	N/A	N/A	N/A	N/A
C.T. 600/5 ⑦	N/A	2066A10G18	N/A	N/A	N/A
C.T. 800/5 ⑦	N/A	2066A10G19	N/A	N/A	N/A
Phase Barrier	N/A	N/A	640C441G01	640C441G01	5264C35G03 ⑨
Cross Bar	2050A15G12	2066A10G15	N/A	N/A	N/A
Shunt	N/A	2066A10G48	650C129G01	646C831G02 ⑧	5264C39G02 ⑪

⑤ Catalog Number A201/A200 Series replaces GCA/GPD series. Renewal parts are the same.
⑥ Use 477B477G06 for Silver Tungsten applications.
⑦ C.T. kit which replaces the single molded 1 CT assembly used on the old size 6 airbreak. The kit includes a single molded 3 C.T. assembly, 2 bus bar and hardware. This C.T. kit also replaces the single molded 3 C.T. assembly used on the present size 6 airbreak and size vacuum.
⑧ Set of 3.
⑨ R.C.
⑩ F.C.
⑪ Set of 4.

Accessories for A201 Contactors — Size 5 – 9

Table 17-25. Coils

Voltage	Hz	Size 5	Size 6
		Style Number	Style Number
Sizes 5 and 6			
110/120	60	2050A14G05	2050A12G05
110/120	50	2050A14G06	2050A12G06
200/208	50	2050A14G07	2050A12G07
220/240	50	2050A14G08	2050A12G08
200/208	60	2050A14G09	2050A12G09
220/240	60	2050A14G10	2050A12G10
277/303	60	2050A14G12	2050A12G12
380/415	50	2050A14G14	2050A12G14
440/480	60	2050A14G15	2050A12G15
440/480	50	2050A14G16	2050A12G16
550/600	60	2050A14G17	2050A12G17
550/600	50	2050A14G18	2050A12G18
380/415	60	2050A14G19	2050A12G19
120/240	60	2050A14G20	2050A12G20
24 DC		2050A14G21	2050A12G21
48 DC		2050A14G22	2050A12G22
125 DC		2050A14G25	2050A12G25
250 DC		2050A14G27	2050A12G27

Line Voltage	Size 7, 8	Required
	Style Number	
Sizes 7 and 8		
125V DC	438C805G04	2
230V DC	438C805G02	2
250V DC	438C805G03	2
110/120V AC ① ④	438C805G12	2
220/240V AC ② ④	438C805G11	2
380V AC ③ ④	438C805G15	2
440/480V AC ③ ④	438C805G10	2
550/575V AC ③ ④	438C805G13	2

Line Voltage	Size 9
	Style Number
Size 9	
110V DC	5264C34G01 ⑤

① Rectifier 125V 2018A40G01 (1 required).
② Rectifier 250V 2018A40G02 (1 required).
③ Rectifier 600V 2018A40G03 (1 required).
④ These coils require an external rectifier. If the rectifier needs replacement, order by the appropriate style number.
⑤ Contains coil and resistor.

Coils and Kits

Table 17-26. Replacement Coils

Voltage	Coil Suffix	Catalog Number
Frame C		
110/50 120/60	A	XTCERENCOILCA
110 – 130V DC	AD	XTCERENCOILCAD
220/50 240/60	B	XTCERENCOILCB
200 – 240V DC	BD	XTCERENCOILCBD
415/50 480/60	C	XTCERENCOILCC
550/50 600/60	D	XTCERENCOILCD
208/60	E	XTCERENCOILCE
230/50	F	XTCERENCOILCF
190/50 220/60	G	XTCERENCOILCG
240/50 277/60	H	XTCERENCOILCH
380/50 440/60	L	XTCERENCOILCL
400/50	N	XTCERENCOILCN
380/60	P	XTCERENCOILCP
12/50 12/60	R	XTCERENCOILCR
12 – 14V DC	RD	XTCERENCOILCRD
24/50 24/60	T	XTCERENCOILCT
24 – 27V DC	TD	XTCERENCOILCTD
24/50	U	XTCERENCOILCU
42/50 48/60	W	XTCERENCOILCW
48 – 60V DC	WD	XTCERENCOILCWD
48/50	Y	XTCERENCOILCY
Frame D		
110/50 120/60	A	XTCERENCOILDA
110 – 130V DC	AD	XTCERENCOILDAD
220/50 240/60	B	XTCERENCOILDB
200 – 240V DC	BD	XTCERENCOILDBD
415/50 480/60	C	XTCERENCOILDC
550/50 600/60	D	XTCERENCOILDD
208/60	E	XTCERENCOILDE
230/50	F	XTCERENCOILDF
190/50 220/60	G	XTCERENCOILDG
240/50 277/60	H	XTCERENCOILDH
380/50 440/60	L	XTCERENCOILDL
400/50	N	XTCERENCOILDN
380/60	P	XTCERENCOILDP
12/50 12/60	R	XTCERENCOILDR
12 – 14V DC	RD	XTCERENCOILDRD
24/50 24/60	T	XTCERENCOILDT
24 – 27V DC	TD	XTCERENCOILDTD
24/50	U	XTCERENCOILDU
42/50 48/60	W	XTCERENCOILDW
48 – 60V DC	WD	XTCERENCOILDWD
48/50	Y	XTCERENCOILDY
Frame F ①		
110/50 120/60	A	XTCERENCOILFA
110 – 130V DC	AD	XTCERENCOILFAD
220/50 240/60	B	XTCERENCOILFB
200 – 240V DC	BD	XTCERENCOILFBD
415/50 480/60	C	XTCERENCOILFC
550/50 600/60	D	XTCERENCOILFD
208/60	E	XTCERENCOILFE
230/50	F	XTCERENCOILFF
190/50 220/60	G	XTCERENCOILFG
240/50 277/60	H	XTCERENCOILFH
380/50 440/60	L	XTCERENCOILFL
400/50	N	XTCERENCOILFN
380/60	P	XTCERENCOILFP
12/50 12/60	R	XTCERENCOILFR
24/50 24/60	T	XTCERENCOILFT
24 – 27V DC	TD	XTCERENCOILFTD
24/50	U	XTCERENCOILFU
42/50 48/60	W	XTCERENCOILFW
48 – 60V DC	WD	XTCERENCOILFWD
48/50	Y	XTCERENCOILFY

① Frame F replacement coils can only be used with contactors having the following date codes: DC Coils, 2706 or later; AC Coils, 4706 or later.

Voltage	Coil Suffix	Catalog Number
Frame G ③		
100 – 120V 50/60	A	XTCERENCOILGA
110 – 130V DC	AD	XTCERENCOILGAD
190 – 240V 50/60	B	XTCERENCOILGB
200 – 240V DC	BD	XTCERENCOILGBD
480 – 500V 50/60	C	XTCERENCOILGC
380 – 440V 50/60	L	XTCERENCOILGL
24/50 24/60	T	XTCERENCOILGT
24 – 27V DC	TD	XTCERENCOILGTD
42 – 48V 50/60	W	XTCERENCOILGW
48 – 60V DC	WD	XTCERENCOILGWD
Frame L ②		
110 – 250V AC/DC	A	XTCERENCOILLA
250 – 500V 40 – 60	C	XTCERENCOILLC
24 – 48V DC	TD	XTCERENCOILLTD
48 – 110V AC/DC	Y	XTCERENCOILLY
Frame M ②		
110 – 250V AC/DC	A	XTCERENCOILMA
250 – 500V 40 – 60	C	XTCERENCOILMC
24 – 48V DC	TD	XTCERENCOILMTD
48 – 110V AC/DC	Y	XTCERENCOILMY
Frame N ②		
110 – 250V AC/DC	A	XTCERENCOILNA
250 – 500V 40 – 60	C	XTCERENCOILNC
48 – 110V AC/DC	Y	XTCERENCOILNY

② Electronic modules including coils.
③ Frame G replacement coils can only be used with contactors having date codes of 2706 or later.

Table 17-27. Replacement Contact Kits

For Use with...	Catalog Number
XTCE040D – XTCE065D	XTCERENCONTACTD
XTCE185L – XTCE250L	XTCERENCONTACTL
XTCE300M – XTCE500M	XTCERENCONTACTM
XTCE085F – XTCE095F	XTCERENCONTACTF
XTCE115G – XTCE150G	XTCERENCONTACTG

Table 17-28. Replacement Vacuum Tube Assembly

For Use with...	Catalog Number
XTCE580N	XTCERENVACT580
XTCE650N	XTCERENVACT650
XTCE750N	XTCERENVACT750
XTCE820N	XTCERENVACT820

Table 17-29. Replacement Arc Chambers

For Use with...	Catalog Number
XTCE185L	XTCERENARC185
XTCE225L	XTCERENARC225
XTCE250L	XTCERENARC250
XTCE300M	XTCERENARC300
XTCE400M	XTCERENARC400
XTCE500M	XTCERENARC500

IEC Contact Block

Table 17-30. IEC Contact Block

Frame	Amperes	Catalog Number
B-Frame 45 mm	18 25 32	E04NB18X3N E04NB25X3N E04NB32X3N
C-Frame 54 mm	40 50	E04NC40X3N E04NC50X3N
D-Frame 76 mm	65 85 100	E04ND65X3N E04ND85X3N E04ND10X3N
E-Frame 105 mm	125 160 200	E04NE12X3N E04NE16X3N E04NE20X3N

IEC Coil Controller

B Frame Non-reversing (pictured)

Table 17-31. IEC Coil Controller

Frame	Catalog Number
Non-reversing	
B-Frame — 45 mm	E02NBXCXNN
C-Frame — 54 mm	E02NCXCXNN
D-Frame — 76 mm	E02NDXCXNN
E-Frame — 105 mm	E02NEXCXNN
F-Frame — 140 mm	EMUCCF
Reversing	
B-Frame — 45 mm	E03NBXCXNN
C-Frame — 54 mm	E03NCXCXNN
D-Frame — 76 mm	E03NDXCXNN
E-Frame — 105 mm	E03NEXCXNN
F-Frame — 140 mm	EMUCCF

Coils

Table 17-32. 24V DC Coils

Description	Catalog Number
B-Frame Coil	EMCB
C-Frame Coil	EMCC
D-Frame Coil	EMCD
E-Frame Coil	EMCE
F-Frame Coil	EMCF

IEC Solid-State Overload Relay

Table 17-33. IEC Solid-State Overload Relay

Frame	Overload Adjustment Range (Amperes)	Catalog Number
Non-reversing		
A-Frame 27 mm	.25 – .8 .59 – 1.9 1.4 – 4.4 2.8 – 9.0 3.8 – 12	E05NAXRA3A E05NAXRB3A E05NAXRC3A E05NAXRD3A E05NAXRE3A
B-Frame 45 mm	.25 – .8 .59 – 1.9 1.4 – 4.4 2.8 – 9.0 6.3 – 20 10 – 32	E05NBXRA3A E05NBXRB3A E05NBXRC3A E05NBXRD3A E05NBXRG3A E05NBXRJ3A
C-Frame 54 mm	.25 – .8 .59 – 1.9 1.4 – 4.4 2.8 – 9.0 5.0 – 16 8.4 – 27 16 – 50	E05NCXRA3A E05NCXRB3A E05NCXRC3A E05NCXRD3A E05NCXRF3A E05NCXRH3A E05NCXRL3A
D-Frame 76 mm	5.0 – 16 8.4 – 27 14 – 45 31 – 100	E05NDXRF3A E05NDXRH3A E05NDXRK3A E05NDXRN3A
E-Frame 105 mm	14 – 45 28 – 90 42 – 135 63 – 200	E05NEXRK3A E05NEXRM3A E05NEXRP3A E05NEXRR3A
F-Frame 140 mm	42 – 135 84 – 270 131 – 420	E05NFXRP3A E05NFXRS3A E05NFXRT3A
Reversing		
B-Frame 45 mm	.25 – .8 .59 – 1.9 1.4 – 4.4 2.8 – 9.0 6.3 – 20 10 – 32	E06NBXRA3A E06NBXRB3A E06NBXRC3A E06NBXRD3A E06NBXRG3A E06NBXRJ3A
C-Frame 54 mm	.25 – .8 .59 – 1.9 1.4 – 4.4 2.8 – 9.0 5.0 – 16 8.4 – 27 16 – 50	E06NCXRA3A E06NCXRB3A E06NCXRC3A E06NCXRD3A E06NCXRF3A E06NCXRH3A E06NCXRL3A
D-Frame 76 mm	5.0 – 16 8.4 – 27 14 – 45 31 – 100	E06NDXRF3A E06NDXRH3A E06NDXRK3A E06NDXRN3A
E-Frame 105 mm	14 – 45 28 – 90 42 – 135 63 – 200	E06NEXRK3A E06NEXRM3A E06NEXRP3A E06NEXRR3A

Contact Kits

Table 17-34. IEC Contact Kits

Frame Size	Description	Catalog Number
C	3-Pole, 40A	**EMCKT40** ①
	3-Pole, 50A	**EMCKT50** ①
D	3-Pole, 65A	**EMCKT65** ①
	3-Pole, 85A	**EMCKT85** ①
	3-Pole, 100A	**EMCKT100** ①
E	3-Pole, 125A 3-Pole, 160A 3-Pole, 200A	**EMCKT125** **EMCKT160** **EMCKT200**
F	3-Pole, 250A 3-Pole, 315A 3-Pole, 420A	**EMCKT250** **EMCKT315** **EMCKT420**

① Includes set of Hold Open and Non-hold Open movable contacts.

24V DC Coils

Table 17-35. 24V DC Coils

	Frame Size	Catalog Number
	B	**EMCB**
	C	**EMCC**
	D	**EMCD**
	E	**EMCE**
	F	**EMCF**

Fanning Strips

Table 17-36. Reversing Fanning Strips

IEC Frame	Description	Catalog Number
A-Frame	Line and Load Side, Wire Sets	**EMFRA**
B-Frame	Line Side Load side	**EMFRLB** **EMFRTB**
C-Frame	Line Side Load side	**EMFRLC** **EMFRTC**
D-Frame	Line Side Load side	**EMFRLD** **EMFRTD**
E-Frame	Line Side Load side	**EMFRLE** **EMFRTE**
F-Frame	Line Side Bus Bar Set Load side Bus Bar Set	**EMFRLF** **EMFRTF**

Lug Kits and Reversing Kits

For Lug Kits and Reversing Kits, see Accessories, **Page 16-3**.

Connectors

Table 17-37. Control Terminal Connectors

No. of Pins	Pitch (mm)	Description	Catalog Number ②
4 8 5	5 5 5	Frames A – C, Locking Frames A – F, Locking Frame F, Locking	**EMA78L** **EMA76L** **EMA77L**
4 5	5 5	Frame A Frame A	**EMA78** **EMA77**
5	5	Frame F, Locking	**EMA77LR**
6 6	3.5 3.5	Frame A Frame A, Locking	**EMA81** **EMA81L**
—	—	Reversing Wiring Harness, Frame F	**EMA80L**

② Suffix L indicates locking.

Mechanical Interlock

Table 17-38. IEC Mechanical Interlock

Frame ③	Catalog Number
B – E F ④	**EMMB** **C321KM50**

③ The A-Frame 27 mm does not have a separate mechanical interlock due to its embedded design and board requirements.

④ The F-Frame 140 mm uses the Freedom Series Mechanical Interlock.

Reversing Interface

Table 17-39. IEC 2-Wire Reversing Interface

Description	Catalog Number
8-pin for 45 – 140 mm (IEC 6A – 420A, NEMA Size 00 – 5) Reversing Starters	**EMA2WR8**
8-pin for 45 – 105 mm (IEC 18A – 200A, NEMA Size 00 – 4) Reversing Contactors	
5-pin for 27 mm (IEC 6A – 12A) or 140 mm (IEC 250A – 420A, NEMA Size 5) Reversing Contactors	**EMA2WR5**

IEC Frames A – F

Table 17-40. IEC Frames A – F — See Contactor/Starter Nameplate to Determine Series A1, B1 or C1.

Description		IEC Frames A – F	IEC Frames A – C ①		IEC Frames D – F ①	
		Series A1	Series B1	Series C1	Series B1	Series C1
		Part Number	Part Number	Part Number	Part Number	Part Number
Renewal Parts Publication Number		None	None	None	None	None
Contact Kits						
2-Pole		②	②	②	②	②
3-Pole		②	②	②	②	②
4-Pole		②	②	②	②	②
5-Pole		②	②	②	②	②
Magnet Coils	**Coil Suffix**					
120V 60 Hz or 110V 50 Hz	**A**	**9-2650-1**	**9-2875-1**	**9-2875-1**	**9-2876-1**	**9-2876-1**
240V 60 Hz or 220V 50 Hz	**B**	**9-2650-2**	**9-2875-2**	**9-2875-2**	**9-2876-2**	**9-2876-2**
480V 60 Hz or 440V 50 Hz	**C**	**9-2650-3**	**9-2875-3**	**9-2875-3**	**9-2876-3**	**9-2876-3**
600V 60 Hz or 550V 50 Hz	**D**	**9-2650-4**	**9-2875-4**	**9-2875-4**	**9-2876-4**	**9-2876-4**
208V 60 Hz	**E**	**9-2650-5**	**9-2875-5**	**9-2875-5**	**9-2876-5**	**9-2876-5**
277V 60 Hz	**H**	**9-2650-13**	**9-2875-12**	**9-2875-12**	**9-2876-12**	**9-2876-12**
208/240V 60 Hz	**J**	**—**	**9-2875-37**	**9-2875-37**	**9-2876-37**	**9-2876-37**
240V 50 Hz	**K**	**9-2650-12**	**9-2875-11**	**9-2875-11**	**9-2876-11**	**9-2876-11**
380 – 415V 50 Hz	**L**	**9-2650-6**	**9-2875-6**	**9-2875-6**	**9-2876-6**	**9-2876-6**
24V 60 Hz – 24V 50 Hz	**T**	**—**	**9-2875-36**	**9-2875-36**	**9-2876-36**	**9-2876-36**
24V 60 Hz	**T**	**9-2650-7**	**—**	**—**	**—**	**—**
24V 50 Hz	**U**	**9-2650-14**	**9-2875-13**	**9-2875-13**	**9-2876-13**	**9-2876-13**
32V 50 Hz	**V**	**9-2650-9**	**9-2875-16**	**9-2875-16**	**9-2876-16**	**9-2876-16**
48V 60 Hz	**W**	**9-2650-8**	**9-2875-8**	**9-2875-8**	**9-2876-8**	**9-2876-8**
48V 50 Hz	**Y**	**9-2650-10**	**9-2875-9**	**9-2875-9**	**9-2876-9**	**9-2876-9**
Overload Relays						
For Replacement on Existing Starters: 3-Pole — Ambient Compensated Bimetallic		**C306DN3B**	**C306DN3B**	**C306DN3B**	**C306DN3B**	**C306DN3B**
Current Transformer						
Transformer		**—**	**—**	**—**	**—**	**—**
Magnet Frame Armature						
Lower Magnet Frame		②	②	②	②	②
Upper Magnet Frame		②	②	②	②	②

① Non-encapsulated coils.

② Replace with complete contactor.

IEC Frames G, H and J

Table 17-41. IEC Frames G, H and J — See Contactor/Starter Nameplate to Determine Series A1 and B1.

Description		IEC Frame G		IEC Frame H		IEC Frame J	
		Series A1	Series B1	Series A1	Series B1	Series A1	Series B1
		Part Number	Part Number	Part Number	Part Number	Part Number	Part Number
Renewal Parts Publication Number		20862	22178	20862	22178	20862	22178
Contact Kits							
2-Pole		6-65-3	6-65-3	6-65-5	6-65-5	6-65-7	6-65-7
3-Pole		6-65-4	6-65-4	6-65-6	6-65-6	6-65-8	6-65-8
4-Pole		6-65-11	6-65-11	6-65-13	6-65-13	6-65-15	6-65-15
5-Pole		6-65-12	6-65-12	6-65-14	6-65-14	6-65-16	6-65-16
Magnet Coils	**Coil Suffix**						
120V 60 Hz or 110V 50 Hz	A	9-2703-1	9-2703-1	9-2703-1	9-2703-1	9-2703-1	9-2703-1
240V 60 Hz or 220V 50 Hz	B	9-2703-2	9-2703-2	9-2703-2	9-2703-2	9-2703-2	9-2703-2
480V 60 Hz or 440V 50 Hz	C	9-2703-3	9-2703-3	9-2703-3	9-2703-3	9-2703-3	9-2703-3
600V 60 Hz or 550V 50 Hz	D	9-2703-4	9-2703-4	9-2703-4	9-2703-4	9-2703-4	9-2703-4
208V 60 Hz	E	9-2703-9	9-2703-9	9-2703-9	9-2703-9	9-2703-9	9-2703-9
277V 60 Hz	H	9-2703-7	9-2703-7	9-2703-7	9-2703-7	9-2703-7	9-2703-7
240V 50 Hz	K	9-2703-14	9-2703-14	9-2703-14	9-2703-14	9-2703-14	9-2703-14
380 – 415V 50 Hz	L	9-2703-8	9-2703-8	9-2703-8	9-2703-8	9-2703-8	9-2703-8
24V 60 Hz – 24V 50 Hz	T	—	—	—	—	—	—
24V 60 Hz	T	9-2703-6	9-2703-6	9-2703-6	9-2703-6	9-2703-6	9-2703-6
24V 50 Hz	U	9-2703-12	9-2703-12	9-2703-12	9-2703-12	9-2703-12	9-2703-12
32V 50 Hz	V	9-2703-10	9-2703-10	9-2703-10	9-2703-10	9-2703-10	9-2703-10
48V 60 Hz	W	9-2703-11	9-2703-11	9-2703-11	9-2703-11	9-2703-11	9-2703-11
48V 50 Hz	Y	9-2703-13	9-2703-13	9-2703-13	9-2703-13	9-2703-13	9-2703-13
Overload Relays							
For Replacement on Existing Starters: 3-Pole — Ambient Compensated Bimetallic		C306DN3B	C306DN3B	C306DN3B	C306DN3B	C306GN3B	C306GN3B
Current Transformer							
Transformer		—	—	—	—	—	—
Magnet Frame Armature							
Lower Magnet Frame		17-18200	17-18200	17-18200	17-18200	17-18200	17-18200
Upper Magnet Frame		48-1936	48-1936	48-1936	48-1936	48-1936	48-1936

IEC Frames K, L, M and N

Table 17-42. IEC Frames K, L, M and N

Description		IEC Frame K		IEC Frame L	IEC Frame M	IEC Frame N
		Series A1	Series B1			
		Part Number	Part Number	Part Number	Part Number	Part Number
Renewal Parts Publication Number		20862	22178	20427	20427	20427
Contact Kits						
2-Pole		6-65-18	6-65-18	6-43-3	6-43	6-43-5
3-Pole		6-65-17	6-65-17	6-43-4	6-43-2	6-43-6
4-Pole		—	—	—	—	—
5-Pole		—	—	—	—	—
Magnet Coils	**Coil Suffix**					
120V 60 Hz or 110V 50 Hz	A	9-2703-1	9-2703-1	9-2756-1	9-2756-1	9-2756-1
240V 60 Hz or 220V 50 Hz	B	9-2703-2	9-2703-2	9-2756-2	9-2756-2	9-2756-2
480V 60 Hz or 440V 50 Hz	C	9-2703-3	9-2703-3	9-2756-3	9-2756-3	9-2756-3
600V 60 Hz or 550V 50 Hz	D	9-2703-4	9-2703-4	9-2756-4	9-2756-4	9-2756-4
208V 60 Hz	E	9-2703-9	9-2703-9	9-2756-5	9-2756-5	9-2756-5
277V 60 Hz	H	9-2703-7	9-2703-7	9-2756-9	9-2756-9	9-2756-9
240V 50 Hz	K	9-2703-14	9-2703-14	9-2756-13	9-2756-13	9-2756-13
380 – 415V 50 Hz	L	9-2703-8	9-2703-8	—	—	—
380V 50 Hz	L	—	—	9-2756-12	9-2756-12	9-2756-12
415V 50 Hz	M	—	—	9-2756-8	9-2756-8	9-2756-8
550V 50 Hz	N	—	—	9-2756-14	9-2756-14	9-2756-14
24V 60 Hz – 24V 50 Hz	T	—	—	—	—	—
24V 60 Hz	T	9-2703-6	9-2703-6	9-2756-6	9-2756-6	9-2756-6
24V 50 Hz	U	9-2703-12	9-2703-12	9-2756-11	9-2756-11	9-2756-11
32V 50 Hz	V	9-2703-10	9-2703-10	9-2756-10	9-2756-10	9-2756-10
48V 60 Hz	W	9-2703-11	9-2703-11	9-2756-15	9-2756-15	9-2756-15
48V 50 Hz	Y	9-2703-13	9-2703-13	9-2756-7	9-2756-7	9-2756-7
Overload Relays						
For Replacement on Existing Starters 3-Pole — Ambient Compensated Bimetallic		C306GN3B	C306GN3B	10-6530	10-6530-2	10-6530-3
Current Transformer						
Transformer		—	—	—	—	—
Magnet Frame Armature						
Lower Magnet Frame		17-18200	17-18200	17-8955-2	17-8955-2	17-8955-2
Upper Magnet Frame		48-1936	48-1936	48-1902	48-1902	48-1902

IEC Frames P, R, S, T, U and V

Table 17-43. IEC Frames P, R and S

Description		IEC Frame P	IEC Frame R	IEC Frame S
		Part Number	Part Number	Part Number
Renewal Parts Publication Number		22278	22278	22278
Contact Kits	Size	6-294	6-288	6-286
Magnet Coils	Coil Suffix			
120V 60 Hz or 110V 50 Hz	A	9-1891-1	9-1891-1	9-1891-1
200V 50 Hz or 118V 60 Hz	E	—	—	—
240V 60 Hz or 220V 50 Hz	B	9-1891-2	9-1891-2	9-1891-2
254V 50 Hz or 277V 60 Hz	H	—	—	—
380V 50 Hz or 415V 60 Hz	L	—	—	—
480V 60 Hz or 440V 50 Hz	C	9-1891-3	9-1891-3	9-1891-3
600V 60 Hz or 550V 50 Hz	D	9-1891-4	9-1891-4	9-1891-4
208V 60 Hz	E	9-1891-13	9-1891-13	9-1891-13
277V 60 Hz	H	9-1891-26	9-1891-26	9-1891-26
240V 50 Hz	K	9-1891-20	9-1891-20	9-1891-20
380V 50 Hz	L	9-1891-14	9-1891-14	9-1891-14
415V 50 Hz	M	9-1891-21	9-1891-21	9-1891-21
24V 60 Hz	T	9-1891-15	9-1891-15	9-1891-15
Overload Relays				
Reference C316 Overload Relays				
Magnet Frame Armature				
Lower Magnet Frame		48-1030-2	48-1030-2	48-1030-2
Upper Magnet Frame		48-1029-4	48-1029-4	48-1029-4

Table 17-44. IEC Frames T, U and V

Description		IEC Frame T	IEC Frame U	IEC Frame V
		Part Number	Part Number	Part Number
Renewal Parts Publication Number		22275	22276	22586
Contact Kits	Size	6-621	6-622	6-601
Magnet Coils	Coil Suffix			
120V 60 Hz or 110V 50 Hz	A	9-3006	9-3006	9-2698
200V 50 Hz or 118V 60 Hz	E	9-3006-5	9-3006-5	—
240V 60 Hz or 220V 50 Hz	B	9-3006-2	9-3006-2	9-2698-2
254V 50 Hz or 277V 60 Hz	H	9-3006-6	9-3006-6	9-2698-2
380V 50 Hz or 415V 60 Hz	L	9-3006-7	9-3006-7	9-2698-6
480V 60 Hz or 440V 50 Hz	C	9-3006-3	9-3006-3	9-2698-3
600V 60 Hz or 550V 50 Hz	D	9-3006-4	9-3006-4	9-2698-4
208V 60 Hz	E	—	—	9-2698-5
277V 60 Hz	H	—	—	—
240V 50 Hz	K	—	—	—
380V 50 Hz	L	—	—	—
415V 50 Hz	M	—	—	—
24V 60 Hz	T	—	—	—
Overload Relays				
Reference C316 Overload Relays				
Magnet Frame Armature				
Lower Magnet Frame		—	—	—
Upper Magnet Frame		—	—	—

C30CN Lighting Contactors

Magnet Coils for the Base Contactor

Magnetic Coils

Table 17-45. Magnetic Coils

Coil Voltage	Catalog Number
115 – 120V 60 Hz/110V 50 Hz	9-3242-1
230 – 240V 60 Hz/220V 50 Hz	9-3242-2
460 – 480V 60 Hz/440V 50 Hz	9-3242-3
575 – 600V 60 Hz/550V 50 Hz	9-3242-4
200 – 208V 60 Hz	9-3242-5
265 – 277V 60 Hz/240V 50 Hz	9-3242-6
24V 60 Hz/20V 50 Hz	9-3242-7
28V 60 Hz/24V 50 Hz	9-3242-8
347V 60 Hz	9-3242-9

CN35 Lighting Contactors

Table 17-46. Renewal Parts for CN35 Lighting Contactors

Description		10A	20A, 30A	60A	100A	200A	300A
		Series C1	Series C1	Series B1			Series B1
		Part No.	Part No.	Part No.	Part No.	Part No.	Part No.
Contact Kits							
2-Pole		①	①	6-65-7	6-43-5	6-44	6-45
3-Pole		①	①	6-65-8	6-43-6	6-44-2	6-45-2
4-Pole		①	①	6-65-15	—	—	—
5-Pole		①	①	6-65-16	—	—	—
Magnet Coils	Coil Suffix						
120V 60 Hz or 110V 50 Hz	A	9-2875-1	9-2876-1	9-2703-1	9-2756-1	9-1891-1	9-1891-1
240V 60 Hz or 220V 50 Hz	B	9-2875-2	9-2876-2	9-2703-2	9-2756-2	9-1891-2	9-1891-2
480V 60 Hz or 440V 50 Hz	C	9-2875-3	9-2876-3	9-2703-3	9-2756-3	9-1891-3	9-1891-3
600V 60 Hz or 550V 50 Hz	D	9-2875-4	9-2876-4	9-2703-4	9-2756-4	9-1891-4	9-1891-4
208V 60 Hz	E	9-2875-5	9-2876-5	9-2703-9	9-2756-5	9-1891-13	9-1891-13
277V 60 Hz	H	9-2875-12	9-2876-12	9-2703-7	9-2756-9	9-1891-26	9-1891-26
208/240V 60Hz	J	9-2875-37	9-2876-37	—	—	—	—
240V 50Hz	K	9-2875-11	9-2876-11	9-2703-14	9-2756-13	9-1891-20	9-1891-20
380 – 415V 50 Hz	L	9-2875-6	9-2876-6	9-2703-8	—	—	—
380V 50 Hz	L	—	—	—	9-2756-12	9-1891-14	9-1891-14
415V 50 Hz	M	—	—	—	9-2756-8	9-1891-21	9-1891-21
550V 50 Hz	N	—	—	—	9-2756-14	9-1891-8	9-1891-8
24V 60 Hz – 24V 50 Hz	T	9-2875-36	9-2876-36	—	—	—	—
24V 60 Hz	T	—	—	9-2703-6	9-2756-6	9-1891-15	9-1891-15
24V 50 Hz	U	9-2875-36	9-2876-13	9-2703-12	9-2756-11	9-1891-16	9-1891-16
32V 50 Hz	V	9-2875-16	9-2876-16	9-2703-10	9-2756-10	—	—
48V 60 Hz	W	9-2875-8	9-2876-8	9-2703-11	9-2756-15	—	—
48V 50 Hz	Y	9-2875-9	9-2876-9	9-2703-13	9-2756-7	9-1891-18	9-1891-18

① Replace with complete contactor.

A202 Lighting Contactors

Table 17-47. AC Coil Renewal Parts for A202 — Magnetically Latched

Voltage	Hz	2-, 3-, 4-Pole Part Number	5-Pole Part Number
30 Ampere			
110/120 208/240 277 440/480 575	50/60	**7874A93G01** **7874A93G02** **7874A93G03** **7874A93G04** **7874A93G05**	**7874A89G01** **7874A89G02** **7874A89G03** **7874A89G04** **7874A89G05**
60 Ampere			
		2-, 3-Pole	**4-, 5-Pole**
110/120 208/240 277 440/480 575	50/60	**7874A93G01** **7874A93G02** **7874A93G03** **7874A93G04** **7874A93G05**	**7874A87G01** **7874A87G02** **7874A87G03** **7874A87G04** **7874A87G05**
100 and 200 Ampere			
110/120 208/240 277 440/480 550/575	50/60	**7874A85G01** **7874A85G02** **7874A85G03** **7874A85G04** **7874A85G05**	**7874A83G01** **7874A83G02** **7874A83G03** **7874A83G04** **7874A83G05**

Table 17-48. Terminals (Line and Load)

2-Pole Part Number	3-Pole Part Number	4-Pole Part Number	5-Pole Part Number
30 Ampere			
N/A	N/A	N/A	N/A
60 Ampere			
179C755G17	**179C755G16**	**179C755G17** ①	**179C755G16** **179C755G17** ②
100 Ampere			
179C755G19	**179C755G18**	**179C755G19** ①	**179C755G18** **179C755G19** ②
200 Ampere Model K Electrically Held			
179C755G28	**179C755G27**	**179C755G28** ①	**179C755G27** **179C755G28** ②
200 Ampere Model J Magnetically Latched			
179C755G31	**179C755G30**	**179C755G31** ①	**179C755G30** **179C755G31** ②

① Order quantity of two for 4-pole design.
② Group members for the 5-pole terminal represent the combination of the 2- and 3-pole number.

Table 17-49. Other Accessories

Description	Size	Part Number
Control Module (Rectifier)	30 – 200A	**3915B98G01**

Arc boxes, upper base assemblies and cross bars are equivalent to the A201 series. Consult Eaton.

Contact kits are equivalent to the A201 Model J series, with the exception of the magnetically latched 200 ampere unit. It uses Catalog Number 672B788G07 for the 3-pole device. For other poles, consult Eaton.

Replacement Coils

Table 17-50. Vacuum Contactor — Replacement Coils

Description	Suffix	Part Number
Size 4		
110/120V AC, 50/60 Hz 220/240V AC, 50/60 Hz 380/415V AC, 50/60 Hz 440/480V AC, 50/60 Hz	**J** **K** **H** **U**	**9085A57G01** **9085A57G02** **1D89221G07** **9085A57G03**
Size 5		
110/120V AC, 50/60 Hz 220/240V AC, 50/60 Hz 380/415V AC, 50/60 Hz 440/480V AC, 50/60 Hz	**J** **K** **H** **U**	**7874A09G01** ① **7874A09G04** ② **7874A09G10** **7874A09G05**
Size 6		
110/120V AC, 50/60 Hz 220/240V AC, 50/60 Hz 380/415V AC, 50/60 Hz 440/480V AC, 50/60 Hz	**J** **K** **H** **U**	**7874A24G01** ① **7874A24G02** ② **7874A24G07** **7874A24G03**

① 125V DC can be directly applied to the Size 5 and 6 coil rated for 120V/60 Hz AC (cannot be applied to Size 4).
② 250V DC can be directly applied to the Size 5 and 6 coil rated for 240V/60 Hz AC (cannot be applied to Size 4).

Technical Data & Specifications

Contents

Description	*Page*
General Standards and Ratings	**18-2**
NEMA Contactors and Starters	
IT. Line	**18-3**
Freedom Line	**18-7**
Advantage Line	**18-13**
IEC Contactors and Starters	
XT Line	**18-19**
Lighting Contactors	**18-37**
Reduced Voltage Starters	
S752 Solid-State Soft Starters	**18-38**
S801/S811 Solid-State Soft Starters	**18-41**
Adjustable Frequency Drives	
MVX9000 Microdrives	**18-44**
NEMA Vacuum Break Contactors & Starters	**18-47**
Control Power Transformer Selection	**18-48**
Ampere Ratings of AC Motors	**18-50**
Product Codes	**18-51**

Standards and Certifications

UL File Numbers

The Cutler-Hammer® enclosed control products from Eaton's electrical business are covered by three UL File numbers. Where UL or UL 508 is listed under the Standards and Certifications headers in this catalog or labeled on the products, the following UL File Numbers apply. For example: ECN0521AAA is covered by UL File Number E19224, while ECS92S1EAF is covered by UL File Number E175513.

- E19224 — Non-combination Motor Controllers
- E176513 — Combination Motor Controllers
- E195239 — Power Conversion Equipment

ABS Type Approval

The Cutler-Hammer enclosed control products have been tested and approved for American Bureau of Shipping standards. Both a Product Quality Assurance and Design Assessment approvals must be met in order to comply to ABS Type Approval. The following are Eaton's ABS file numbers for Cutler-Hammer products:

- QA-1597-X — Product Quality Assurance
- 63-HS385744-PDA — Design Assessment

cUL Label

The Cutler-Hammer enclosed control products have been tested and approved for Canadian UL where cUL is listed in this catalog under the Standards and Certifications headers or labeled on the products. The cUL label also indicates that the appropriate **CSA Standard** has been investigated. The following numbers demonstrate cUL approval:

- E19224 — Non-combination Motor Controllers
- E176513 — Combination Motor Controllers
- E195239 — Power Conversion Equipment

CE Label

Where the CE label is applied or certification is mentioned, Eaton has undergone the proper testing to meet or exceed CE requirements. As CE is a self-administered certification, no CE file number is available. However, several products have undergone KEMA KEUR testing, a third party CE-certification testing agency. KEMA reference number are available upon request.

Other Standards and Certifications may apply as noted in product literature. For additional reference information, refer to the Consulting Application Guide or your local Eaton distributor.

Component Standards and Certifications

The standards and certifications described in this catalog are for Cutler-Hammer enclosed control products from Eaton's electrical business. Testing has been done on the complete enclosed assembly in order to achieve these certifications. For additional information on the Standards and Certifications for the components used in Cutler-Hammer enclosed control, please refer to the Cutler-Hammer Control Products Catalog.

Short Circuit Testing

Interrupting Ratings — All Cutler-Hammer enclosed control products have been designed and tested for short circuit interrupting capabilities.

Interrupting Ratings

- **Fusible** — Sizes 1 – 5 suitable for use on a circuit capable of delivering not more than 100,000 rms symmetrical amperes. 600V maximum where a Class R fuse clip kit is properly installed and Class R fuses are used. If Class R fuses are not used, the switch should not be installed on circuits capable of delivering more than 10,000 rms symmetrical amperes. Size 6 is limited to 18,000 and Size 7 is limited to 30,000 rms symmetrical amperes.
- **Circuit Breaker HMCPE** — Sizes 1 – 3 controllers are suitable for use on circuits capable of delivering not more than 100,000 rms symmetrical amperes at 480V maximum; for 600V applications not more than 25,000 rms symmetrical amperes.
- **HVAC Panel and ECP Irrigation Pump Panel** — Suitable for use on circuits capable of delivering not more than 10,000 rms symmetrical amperes at 600V maximum.

Sample Specification

NEMA IT. Combination Starter

Furnish as indicated Cutler-Hammer® Class ECT combination starters manufactured by Eaton's electrical business or approved equal. All starters shall be UL listed and conform to the latest NEMA Standards and the National Electric Code.

Table 18-1. Non-reversing

Description	Catalog Number
Disconnect Switch	**ECT16**
Disconnect Switch with Control Power Transformer	**ECT18**
Circuit Breaker (HMCPE/HMCP)	**ECT22**
Circuit Breaker with Control Power Transformer	**ECT24**

Table 18-2. Reversing

Description	Catalog Number
Disconnect Switch	**ECT17**
Circuit Breaker (HMCPE/HMCP)	**ECT23**

General

- All motor starters shall be NEMA Sizes 1 – 5.
- Overload relays shall be solid-state and provide motor protection accuracy to 2%. Phase loss, phase unbalance protection shall be included as standard. The overload relay shall be heaterless and capable of selecting Class 10, 20 or 30 protection. Full-load current settings shall be set with DIP switches. Optional electrical reset with trip indication is available.
- 24V DC power supplies are available with primary ratings from 480 – 120V AC, and have ratings available from 10 – 160 Watts. Power supplies are equipped with built-in short-circuit protection.
- Control circuit transformers, where specified, shall be encapsulated. Primary and secondary fusing shall be provided. Unless otherwise specified, the secondary shall be 120V AC. 100 VA is minimum.
- Pilot devices, where specified, shall be oiltight and mounted in the flange. Pilot lights shall be transformer type for longer lamp life. Pilot device legend plates shall be engraved aluminum.

Enclosure

- Enclosures shall be Type 1, 3R, 4, 4X, 7/9 or 12, as scheduled.
- The operating mechanism shall be mounted on the flange and shall have positive, non-teasing ON/OFF action. The handle shall be color-coded: red for ON and black for OFF.
- The operating handle shall have a means to lock the handle in the OFF position with a minimum of three standard padlocks having 1/4 inch diameter shackles.
- The enclosure sub-panel shall be easily removed without disturbing the operating mechanism.
- Enclosures shall have means for locking the cover.

Short Circuit Protective Device

Disconnect Switch

- Where specified, a disconnect switch with double break, rotary blades and quick make/quick break action shall be provided.
- A line shield with test probe holes for inspection shall be provided. The shield shall be removable.
- The switch shall have readily visible blades in the open (OFF) position.
- The fusible disconnect switch (through 100A) shall have built-in fuse pullers to make it easier to remove fuses.

Circuit Breaker

- Where specified, an adjustable instantaneous trip, magnetic only circuit breaker shall be provided.
- A manual push-to-trip button shall be provided to exercise the trip unit.

Short Circuit Rating

- Fusible disconnect switches shall be UL listed for 100,000 amperes available when Class R fuses are used.
- Combination starters with adjustable instantaneous trip, magnetic only circuit breakers shall be UL listed for 100,000 amperes available through 480V AC.

Technical Data

Table 18-3. Specifications

Description	Size 00, 0	Size 1	Size 2	Size 3, 4	Size 5
Overall Dimensions in Inches (mm) ① — *w x h x d*					
Non-reversing Contactor	1.8 x 4.4 x 2.4 (45 x 111 x 60)	2.1 x 4.4 x 2.4 (54 x 113 x 60)	3.0 x 5.9 x 3.1 (76 x 150 x 79)	4.1 x 8.0 x 3.5 (105 x 203 x 90)	5.6 x 14.0 x 7.0 (142 x 355 x 178)
Reversing Contactor	3.8 x 5.9 x 2.7 (96 x 149 x 69)	4.5 x 5.9 x 2.6 (114 x 149 x 67)	6.2 x 7.4 x 3.3 (158 x 188 x 84)	8.5 x 9.5 x 3.8 (216 x 242 x 97)	11.7 x 17.2 x 7.0 (296 x 436 x 178)
Non-reversing Starter	1.8 x 5.0 x 2.5 (45 x 127 x 63)	2.1 x 5.4 x 2.5 (54 x 138 x 63)	3.0 x 5.9 x 3.1 (76 x 150 x 79)	4.1 x 8.0 x 3.5 (105 x 203 x 90)	5.7 x 19.4 x 7.0 (145 x 492 x 178)
Reversing Starter	3.8 x 5.9 x 2.7 (96 x 149 x 69)	4.5 x 5.9 x 2.6 (114 x 149 x 67)	6.2 x 7.4 x 3.3 (158 x 188 x 84)	8.5 x 9.5 x 3.8 (216 x 242 x 97)	11.8 x 21.0 x 7.0 (300 x 533 x 178)
Mounting Hole Spacing in Inches (mm) — *w x h*					
Non-reversing Contactor	1.33 x 4.0 (33.8 x 101)	1.46 x 4.10 (37 x 104)	.94 x 2.87 (24 x 73)	1.33 x 4.13 (33.8 x 105)	1.75 x 13.0 (44.5 x 330)
Reversing Contactor	3.15 x 5.35 (80 x 136)	3.15 x 5.35 (80 x 136)	5.51 x 6.89 (140 x 175)	7.87 x 9.06 (200 x 230)	7.82 x 13.0 (198.5 x 330)
Non-reversing Starter	1.33 x 4.62 (33.8 x 117.3)	1.46 x 5.04 (37 x 128)	.94 x 2.87 (24 x 73)	1.33 x 4.13 (33.8 x 105)	1.75 x 18.3 (44.5 x 465)
Reversing Starter	3.15 x 5.35 (80 x 136)	3.15 x 5.35 (80 x 136)	5.51 x 6.89 (140 x 175)	7.87 x 9.06 (200 x 230)	7.82 x 18.3 (198.5 x 465)
Mounting Positions					
Panel-Vertical	Yes	Yes	Yes	Yes	Yes
Panel-Horizontal	Yes	Yes	Yes	Yes	Yes
DIN Rail Mountable	Yes ②	Yes ②	Yes ②	No	No
Weights in Lb. (kg)					
Non-reversing Contactor	.7 (.31)	.9 (.42)	2.8 (1.27)	6.7 (3.05)	20.0 (9.1)
Reversing Contactor	1.9 (.86)	2.6 (1.17)	6.9 (3.13)	16.9 (7.67)	48.0 (21.8)
Non-reversing Starter	.9 (.40)	1.2 (.53)	2.9 (1.32)	7.1 (3.20)	27.0 (12.3)
Reversing Starter	2.0 (.90)	2.6 (1.20)	7.1 (3.20)	16.8 (7.60)	55.0 (25.0)
Mechanical Operating Rate ③					
Maximum	3/sec	3/sec	2/sec	2/sec	1/sec
Mechanical Life					
	10,000,000	10,000,000	8,000,000	8,000,000	5,000,000
Humidity ④					
	95% Non-condensing	95% Non-condensing	95% Non-condensing	95% Non-condensing	95% Non-condensing
Insulation Voltage (Ui)					
	690V	690V	690V	690V	690V
Impulse Withstand Voltage (Uimp)					
	6 kV	6 kV	6 kV	6 kV	6 kV

① Auxiliaries add approximately 1.0" (25 mm) to depth for single, 1.2" (30 mm) for dual.
② Non-reversing contactors and starters only.
③ No load condition.
④ Up to 99% humidity depending on application. Consult factory.

Table 18-3. Specifications (Continued)

Description	Size 00, 0	Size 1	Size 2	Size 3, 4	Size 5
Finger Protection					
Front	IP20	IP20	IP20	IP20	IP20
At Terminals	IP10	IP10	IP00	IP00	IP00
At Terminals with max. size wire installed	IP20	IP10	IP10	IP00	IP00
Terminals L1, L2, L3/T1, T2, T3 ①					
1 Wire per Terminal (stranded or solid)	14 – 8 AWG (1.5 – 10 mm^2)	14 – 4 AWG (1.5 – 16 mm^2)	14 – 1 AWG (1.5 – 35 mm^2)	6 – 250 MCM (16 – 120 mm^2)	4 – 750 MCM (25 – 420 mm^2)
2 Wires per Terminal (stranded or solid)	14 – 10 AWG (1.5 – 4 mm^2)	14 – 6 AWG (1.5 – 16 mm^2)	14 – 2 AWG (1.5 – 25 mm^2)	6 – 3/0 AWG (16 – 70 mm^2)	1/0 — 300 MCM (50 — 150 mm^2)
Strip Length	.45" (11 mm)	.5" (12 mm)	.7" (18 mm)	.8" (21 mm)	1.5" (40 mm)
Torque (max.)	20 lb-in (2.2 Nm) for 14 – 10 AWG (1.5 – 6 mm^2); 25 lb-in (2.8 Nm) for 8 AWG (10 mm^2)	35 lb-in (4.0 Nm) for 14 – 10 AWG (1.5 – 6 mm^2); 40 lb-in (4.5 Nm) for 8 AWG (10 mm^2); 45 lb-in (5.0 Nm) for 6 – 4 AWG (16 mm^2)	45 lb-in (5.0 Nm) for Single 14 – 8 AWG (1.5 – 10 mm^2); 100 lb-in (11 Nm) for Single 6 – 1 AWG (16 – 35 mm^2) and Dual Wire Combinations	250 lb-in (28 Nm)	550 lb-in (62 Nm)
Driver	2.5 mm Hex Key	3 mm Hex Key	5/32" (4 mm) Hex Key	5/16" (8 mm) Hex Key	5/16" (8 mm) Hex Key
Operation Performance					
Coil Voltage (nominal)	24V DC	24V DC	24V DC	24V DC	24V DC
Coil Operating Voltage Range (V DC)	20 – 28	20 – 28	20 – 28	20 – 28	20 – 28
Control Terminals					
(- and +) 1 Wire per Terminal	14 – 12 AWG (1.5 – 2.5 mm^2)	14 – 12 AWG (1.5 – 2.5 mm^2)	14 – 12 AWG (1.5 – 2.5 mm^2)	14 – 12 AWG (1.5 – 2.5 mm^2)	14 – 12 AWG (1.5 – 2.5 mm^2)
(- and +) 2 Wires per Terminal	14 AWG (1.5 mm^2)	14 AWG (1.5 mm^2)	14 AWG (1.5 mm^2)	14 AWG (1.5 mm^2)	14 AWG (1.5 mm^2)
(P, F, R, 1, 2, 3) 1 Wire per Terminal	22 – 12 AWG (0.5 – 2.5 mm^2)	22 – 12 AWG (0.5 – 2.5 mm^2)	22 – 12 AWG (0.5 – 2.5 mm^2)	22 – 12 AWG (0.5 – 2.5 mm^2)	22 – 12 AWG (0.5 – 2.5 mm^2)
(P, F, R, 1, 2, 3) 2 Wires per Terminal	18 – 14 AWG (0.75 – 1.5 mm^2)	18 – 14 AWG (0.75 – 1.5 mm^2)	18 – 14 AWG (0.75 – 1.5 mm^2)	18 – 14 AWG (0.75 – 1.5 mm^2)	18 – 14 AWG (0.75 – 1.5 mm^2)
Torque (max.)	4.5 lb-in (.5 Nm)	4.5 lb-in (.5 Nm)	4.5 lb-in (.5 Nm)	4.5 lb-in (.5 Nm)	4.5 lb-in (.5 Nm)
Strip Length	.25 (7 mm)	.25 (7 mm)	.25 (7 mm)	.25 (7 mm)	.25 (7 mm)
Driver	.13 (3.5 mm) Flat	.13 (3.5 mm) Flat	.13 (3.5 mm) Flat	.13 (3.5 mm) Flat	.13 (3.5 mm) Flat
Temperature ②					
Operating	-40° to +149°F (-40° to +65°C)	-40° to +149°F (-40° to +65°C)	-40° to +149°F (-40° to +65°C)	-40° to +149°F (-40° to +65°C)	-40° to +149°F (-40° to +65°C)
Storage	-58° to +176°F (-50° to +80°C)	-58° to +176°F (-50° to +80°C)	-58° to +176°F (-50° to +80°C)	-58° to +176°F (-50° to +80°C)	-58° to +176°F (-50° to +80°C)
Environmental					
Shock/Vibration	15G/5G	15G/5G	15G/5G	15G/5G	15G/5G ③
Altitude ②	6600 FT (2000M)	6600 FT (2000M)	6600 FT (2000M)	6600 FT (2000M)	6600 FT (2000M)
Pull-In Time (mS) @ 24V					
Excl. Debounce Time	15	15	25	30	70 – 200
Incl. Debounce Time	75	80	88	95	120 – 300
Dropout Time (mS) @ 24V					
Excl. Debounce Time	5	5	12	15	50 – 150
Incl. Debounce Time	65	70	75	80	70 – 250

① Use Class B 75°C copper wire only (or 90°C copper wire sized for 75°C operation per NEC).
② Consult factory for higher ratings.
③ The Non-reversing Starter requires the use of all six mounting screws for the maximum rating.

Note: At other temperatures expressed in °C, for either inrush or sealed, use the 20°C value from the table in the following

Watts = W_{20} [1.1 – .005(T) and
Amps = A_{20} [1.1 – .005(T)]
For example, inrush requirements for a NEMA Size 2 Starter at -25°C would be:
Watts = 130 [1.1 – .005 (-25)] = 160
Amps = 5.4 [1.1 – .005 (-25)] = 6.6

Notes:
- Response time for Control Inputs = Debounce Time
- The time between operating forward and reverse must be greater than the Debounce Time.

Table 18-4. 24V DC Power Supply Requirements @ 68°F (20°C) (see Note at left)

Contactor/Starter Size		Sealed In		Inrush		
Catalog Number ④	NEMA Size	Wattage	Amps	Wattage	Amps	Duration (mS)
N_11B_ _X3N	00, 0	3.7	.15	80	3.3	50
N_01B_ _ _3A	00, 0	3.2	.13	80	3.3	50
N_11C_ _X3N	1	4.2	.18	90	3.8	50
N_01C_ _ _3A	1	3.6	.15	90	3.8	50
N_ _1D_ _ _3_	2	5.0	.21	130	5.4	65
N_ _1E_ _ _3_	3, 4	5.6	.23	140	5.8	85
N_ _1F_ _ _3_	5	12.0	.50	200	8.3	250
N_01F_ _ _3_	5	13.0	.54	200	8.3	250

④ _ indicates missing digit/character of the Catalog Number; may have multiple values.

Electrical Life — AC-1, AC-2, AC-3 and AC-4 Utilization Categories

Table 18-5. Utilization Categories

The International Electrotechnical Commission (IEC) has developed utilization categories for contactors and auxiliary contacts. The IEC utilization categories are used to define the type of electrical load for estimating electrical life, and do not imply the devices are IEC rated.

Category	Typical Application
AC-1	Non-inductive or slightly inductive loads: Resistance furnaces, heating.
AC-2	Slip-ring motors: Starting and stopping of running motors
AC-3	Squirrel cage motors: Starting, switching off motors during running (motors in most industrial applications typically fall into this category).
AC-4	Squirrel cage motors: Starting, plugging ①, inching ② (very few applications in industry are totally AC-4).

① Plugging is stopping or reversing the motor rapidly by reversing the connections while the motor is running.
② Inching or jogging is energizing the motor once or repeatedly for short durations to obtain small movements of the motor driven load.

Life Load Curves — Eaton's Cutler-Hammer *IT.* Electro-Mechanical Series NEMA contactors have been designed and manufactured for superior life performance. All testing has been based on requirements as found in IEC 60947-4-1 and conducted by us. When selecting a contactor, the specifier must give attention to the specific load, utilization category and the required electrical life. For a definition of Utilization Categories, see **Table 18-5** above.

Note: AC-3 tests are conducted at rated device currents and AC-4 tests are conducted at six-times rated device currents. All tests have been run at 460V, 60 Hz.

Actual application life may vary, depending on environmental conditions and application duty cycle.

Contactor Choice —
- Decide what utilization category the application is and choose the appropriate curve from **Figure 18-1** or **Figure 18-2**.
- Locate the intersection of the life-load curve with the operational current (Ie) of the application, as found on the horizontal axis.
- Read the estimated contact life along the vertical axis in number of operations.

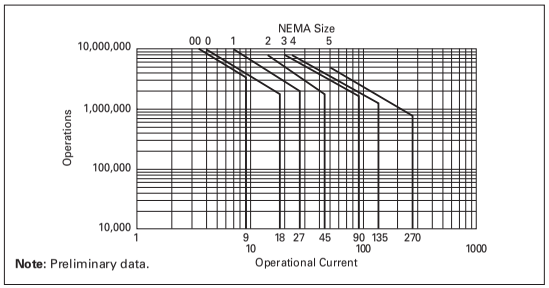

Figure 18-1. Electrical Life — AC-3 Utilization Category

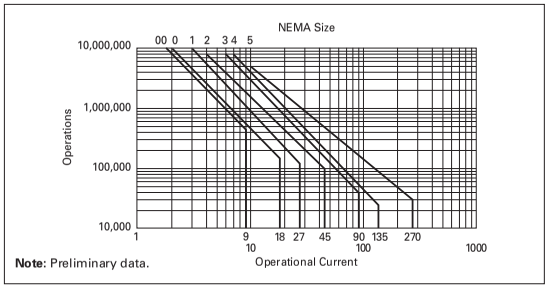

Figure 18-2. Electrical Life — AC-4 Utilization Category

Trip Times

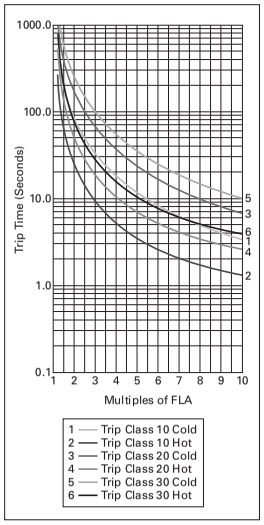

Figure 18-3. Class 10, 20 and 30 Trip Curves

Sample Specification

NEMA Freedom Combination Starters

Furnish as indicated Cutler-Hammer® Class ECN combination starters manufactured by Eaton's electrical business or approved equal. All starters shall be UL listed and conform to the latest Standards and the National Electric Code.

Table 18-6. Non-reversing

Description	Catalog Number
Disconnect Switch	**ECN16**
Disconnect Switch with Control Power Transformer	**ECN18**
Circuit Breaker (HMCPE/HMCP)	**ECN22**
Circuit Breaker with Control Power Transformer	**ECN24**

Table 18-7. Reversing

Description	Catalog Number
Disconnect Switch	**ECN17**
Circuit Breaker (HMCPE/HMCP)	**ECN23**

General

- All motor starters shall be NEMA Sizes 0 – 9. Each starter shall have one NO auxiliary contact, or as scheduled.
- Overload relays shall be ambient compensated bimetallic type with interchangeable heaters, calibrated for 1.0 and 1.15 service factor motors. Electrically isolated NO and NC contacts shall be provided on the relay. Visual trip indication shall be standard. A test trip feature shall be provided for ease of trouble-shooting and shall be conveniently operable without removing components or the motor starter.
- Control circuit transformers, where specified, shall be encapsulated. Primary and secondary fusing shall be provided. Unless otherwise specified, the secondary shall be 120V AC. 50 VA is minimum.
- Pilot devices, where specified, shall be oiltight and mounted in the flange. Pilot lights shall be transformer type for longer lamp life. Pilot device legend plates shall be engraved aluminum.
- Solid-state overloads (SSOL), when specified, shall be heaterless and be capable of selecting Class 10, 20 or 30 protection with manual or automatic reset options. Full-load current settings shall be dial-adjustable.

Enclosure

- Enclosures shall be Type 1, 3R, 4, 4X, 7/9 or 12, as scheduled.
- The operating mechanism shall be mounted on the flange and shall have positive, non-teasing ON/OFF action. The handle shall be color-coded: red for ON and black for OFF.
- The operating handle shall have a means to lock the handle in the OFF position with a minimum of three standard padlocks having 1/4 inch diameter shackles.
- The enclosure sub-panel shall be easily removed without disturbing the operating mechanism on Sizes 0 – 3.
- Enclosures shall have means for locking the cover.

Short Circuit Protective Device

Disconnect Switch

- Where specified, a disconnect switch with double break, rotary blades and quick make/quick break action shall be provided.
- A line shield with test probe holes for inspection shall be provided. The shield shall be removable.
- The switch shall have readily visible blades in the open (OFF) position.
- The fusible disconnect switch (through 100A) shall have built-in fuse pullers to make it easier to remove fuses.

Circuit Breaker

- Where specified, an adjustable instantaneous trip, magnetic only circuit breaker shall be provided.
- A manual push-to-trip button shall be provided to exercise the trip unit.

Short Circuit Rating

- Fusible disconnect switches shall be UL listed for 100,000 amperes available when Class R fuses are used.
- Combination starters with adjustable instantaneous trip, magnetic only circuit breakers shall be UL listed for 100,000 amperes available through 480V AC.
- Note specific short-circuit ratings for the ECP Irrigation Pump Panel and the HVAC Panel on **Page 18-2**.

Technical Data

Table 18-8. Coil Data Notes

P.U.	Pick-up time is the average time taken from closing of the coil circuit to main contact touch.
D.O.	Drop-out time is the average time taken from opening of the coil circuit to main contact separation.
Cold	Coil data with a cold coil.
Hot	Coil data with a hot coil.

All data is based on a standard contactor with no auxiliary devices and a 120V AC or 24V DC magnet coil. Coil data has a ±5% range depending on the application, therefore specific data may vary.

Table 18-9. Specifications — Sizes 00 – 3

Description	Contactor Catalog Number/Size				
	CN15A NEMA Size 00	**CN15B NEMA Size 0**	**CN15D NEMA Size 1**	**CN15G NEMA Size 2**	**CN15K NEMA Size 3**
Configuration					
Number of Poles	2, 3, 4	2, 3	2, 3, 4, 5	2, 3, 4, 5	2, 3
Auxiliary Contacts, Standard	4th Pole NO (1)	Side NO (1)	Side NO (1)	Side NO (1)	Side NO (1)
Add-On Auxiliary Contacts	Top (4) or Side (4)	Top (4) or Side (3)	Top (4) or Side (3)	Top (4) or Side (3)	Left Side (4) or Right Side (3)
Frame Size	45 mm	45 mm	65 mm	65 mm	90 mm
Maximum Voltage Rating	600V AC	600V AC	600V AC	600V AC	600V AC
Continuous Ampere Ratings (I)	9A	18A	27A	45A	90A
Maximum Horsepower (hp)					
1-Phase 115V	1/3	1	2	3	7-1/2
230V	1	2	3	7-1/2	15
3-Phase 200V	1-1/2	3	7-1/2	10	25
230V	1-1/2	3	7-1/2	15	30
460V	2	5	10	25	50
575V	2	5	10	25	50
AC Magnet Coil Data					
Pick-Up Volts — Cold	74%	74%	74%	74%	72%
Pick-Up Volts — Hot	78%	78%	78%	78%	76%
Pick-Up Voltamperes	80	100	230	230	390
Pick-Up Watts	49	65	95	95	112
Sealed Voltamperes	7.5	10	28	28	49.8
Sealed Watts	2.4	3.1	7.8	7.8	13
Drop-Out Volts — Cold	45%	45%	49%	49%	50%
Drop-Out Volts — Hot	46%	46%	50%	50%	52%
Maximum Operation Rate — Ops/Hour	12,000	12,000	12,000	12,000	7,200
Pick-Up Time (mS)	12	12	20	20	14
Drop-Out Time (mS)	12	12	14	14	11
Coil Operating Range % of Rated Voltage	-15% to +10%	-15% to +10%	-15% to +10%	-15% to +10%	-15% to +10%
DC Magnet Coil Data	For DC Magnet Coils (and coil data), see Accessories, **Page 16-7**.				
Operating Temperature	-20° to 65°C	-20° to 65°C	-20° to 65°C	-20° to 65°C	-20° to 65°C
Maximum Operating Altitude (ft.)	6,000	6,000	6,000	6,000	6,000
Mechanical Life	20,000,000	20,000,000	10,000,000	10,000,000	6,000,000
Electrical Life (480V/60 Hz)					
AC-3	4,000,000	3,000,000	5,000,000	3,500,000	1,700,000
AC-4	90,000	85,000	200,000	62,000	80,000
Wire Range					
Power Terminals	12 – 16 stranded, 12 – 14 solid Cu	8 – 16 stranded, 10 – 14 solid Cu	8 – 14 stranded or solid Cu	2 – 14 (upper) and/or 6 – 14 (lower) stranded or solid Cu	1/0 – 14 Cu
Control Terminals	12 – 16 stranded, 12 – 14 solid Cu	12 – 16 stranded, 12 – 14 solid Cu	12 – 16 stranded, 12 – 14 solid Cu	12 – 16 stranded, 12 – 14 solid Cu	12 – 16 stranded 12 – 14 solid Cu
Power Terminal Torque Line and Load — lb-in	7	15	20	40 (14 – 8 AWG) 45 (6 – 4 AWG) 50 (3 AWG)	35 (14 – 10 AWG) 40 (8 AWG) 45 (6 – 4 AWG) 50 (3 – 1/0 AWG)
Auxiliary Contact Rating	A600, P300				

Table 18-10. Specifications — Sizes 4 – 8

Description	Contactor Catalog Number/Size				
	CN15N NEMA Size 4	CN15S NEMA Size 5	CN15T NEMA Size 6	CN15U NEMA Size 7	CN15V NEMA Size 8
Configuration					
Number of Poles	2, 3	2, 3	3	3	3
Auxiliary Contacts, Standard	Side NO (1)	Side NO (1)	Top left 2NO/2NC (1)	Top left 2NO/2NC (1)	Side 2NO/NC (1)
Add-On Auxiliary Contacts	Left side (3) or Right side (4)	Left side (3) or Right side (4)	Top right 2NO/2NC (1)	Top right 2NO/2NC (1)	NO/NC (2)
Frame Size	180 mm	180 mm	280 mm	280 mm	334 mm
Maximum Voltage Rating	600V AC	600V AC	600V AC	600V AC	600V AC
Continuous Ampere Ratings (I)	135A	270A	540A	810A	1215A
Maximum Horsepower (hp)					
1-Phase 115V	—	—	—	—	—
1-Phase 230V	—	—	—	—	—
3-Phase 200V	40	75	150	200	400
3-Phase 230V	50	100	200	300	450
3-Phase 460V	100	200	400	600	900
3-Phase 575V	100	200	400	600	900
AC Magnet Coil Data					
Pick-Up Volts — Cold	72.5%	75%	75%	75%	75%
Pick-Up Volts — Hot	76%	77%	75%	75%	75%
Pick-Up Voltamperes	1158	1158	1600	1600	2450
Pick-Up Watts	240	240	1345	1345	2060
Sealed Voltamperes	100	100	25	25	75
Sealed Watts	27.2	27.2	22	22	60
Drop-Out Volts — Cold	54%	63%	①	①	①
Drop-Out Volts — Hot	56%	64%	①	①	①
Maximum Operation Rate — Ops/Hour	2,400	2,400	N/A	N/A	N/A
Pick-Up Time (mS)	28	25	105	105	70
Drop-Out Time (mS)	14	13	200	200	50
Coil Operating Range % of Rated Voltage	-15% to +10%	-15% to +10%	-15% to +10%	-15% to +10%	-15% to +10%
DC Magnet Coil Data	For DC Magnet Coils (and coil data), see Accessories, **Page 16-7**.				
Operating Temperature	-20° to 65°C	-20° to 65°C	-20° to 65°C	-20° to 65°C	-20° to 65°C
Maximum Operating Altitude (ft.)	6,000	6,000	6,000	6,000	6,000
Mechanical Life	5,000,000	5,000,000	5,000,000	5,000,000	5,000,000
Electrical Life (480V/60 Hz)					
AC-3	800,000	500,000	590,000	450,000	420,000
AC-4	70,000	34,000	7,400	5,000	4,200
Wire Range					
Power Terminals	Open — 3/0 – 8 Cu; Enclosed — 250 kcmil – 6 Cu/Al	750 kcmil — 2 or (2) 250 kcmil – 3/0 Cu/Al	(2) 750 kcmil – 3/0 Cu/Al	(3) 750 kcmil – 3/0 Cu/Al	(4) 750 kcmil – 1/0 Cu/Al
Control Terminals	12 – 16 stranded, 12 – 14 solid Cu	12 – 16 stranded, 12 – 14 solid Cu	12 – 16 stranded, 12 – 14 solid Cu	12 – 16 stranded, 12 – 14 solid Cu	12 – 16 stranded, 12 – 14 solid Cu
Power Terminal Torque Line and Load — lb-in	200	550	550	550	500
Auxiliary Contact Rating	A600, P300				

① 20 – 30% of rated coil voltage.

Electrical Life — AC-3 and AC-4 Utilization Categories

Life Load Curves

Eaton's Cutler-Hammer Freedom Series NEMA contactors have been designed and manufactured for superior life performance in any worldwide application. All testing has been based on requirements as found in NEMA and UL standards and conducted by Eaton. Actual application life may vary depending on environmental conditions and application duty cycle.

Utilization Categories

AC-1 — Non-inductive or slightly inductive loads, such as resistance furnaces and heating.

AC-2 — Starting of slip-ring motors.

AC-3 — Squirrel cage motors; starting, switching off motors during running.

AC-4 — Squirrel cage motors; starting, plugging, inching or jogging.

Note: AC-3 tests are conducted at rated device currents and AC-4 tests are conducted at six times rated device currents. All tests have been run at 460V, 60 Hz.

Contactor Choice

- Decide what utilization category your application is and choose the appropriate curve.
- Locate the intersection of the life-load curve of the appropriate contactor with the applications operational current (Ie), as found on the horizontal axis.
- Read the estimated contact life along the vertical axis in number of operational cycles.

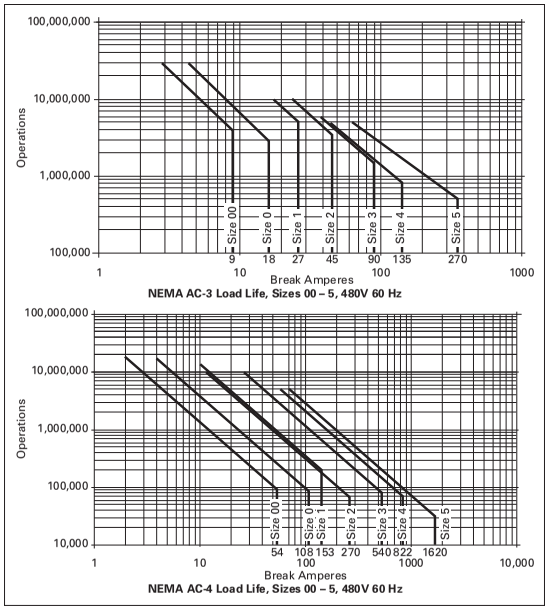

Figure 18-4. AC-3 and AC-4 Utilization Categories

C306 Overload Relay Setting

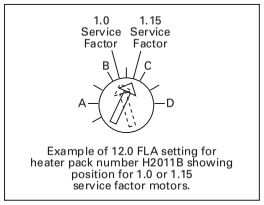

Example of 12.0 FLA setting for heater pack number H2011B showing position for 1.0 or 1.15 service factor motors.

Figure 18-5. FLA Dial Adjustment

For motors having a 1.15 service factor, rotate the FLA adjustment dial to correspond to the motor's FLA rating.

Estimate the dial position when the motor FLA falls between two letter values as shown in the example.

For motors having a 1.0 service factor, rotate the FLA dial one-half position counterclockwise (CCW).

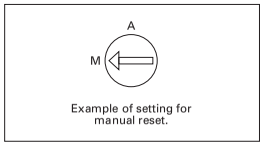

Example of setting for manual reset.

Figure 18-6. Manual/Automatic Reset

The overload relay is factory set at M for manual reset operation. For automatic reset operation, turn the reset adjustment dial to the A position as shown in the illustration.

Automatic reset is not intended for two-wire control devices.

Test for Trip Indication

To test overload relay for trip indication when in manual reset, pull out the blue reset button. An orange flag will appear indicating that the device has tripped. Push reset button in to reset.

Warning — To provide continued protection against fire or shock hazard, the complete overload relay must be replaced if burnout of the heater element occurs.

Heater Pack Selection

"Overload relays are provided to protect motors, motor control apparatus and motor-branch circuit conductors against excessive heating due to motor overloads and failure to start. This definition does not include: 1) motor circuits over 600V, 2) short circuits, 3) ground faults and 4) fire pump control." (NEC Art. 430-31)

Time Current Characteristics

The time-current characteristics of an overload relay is an expression of performance which defines its operating time at various multiples of its current setting. Tests are run at Underwriters Laboratories (UL) in accordance with NEMA Standards and the NEC. UL requires:

- When tested at 100 percent of its current rating, the overload relay shall trip ultimately.
- When tested at 200 percent of its current rating, the overload relay shall trip in not more than 8 minutes.
- When tested at 600 percent of the current rating, the overload relay shall trip in not more than 10 or 20 seconds, depending on the Class of the relay.

"Current Rating" is defined as the minimum current at which the relay will trip. Per NEC, an overload must ultimately trip at 125% of FLA current (heater) setting for a 1.15 service factor motor and 115% FLA for a 1.0 service factor motor.

"Current Setting" is defined as the FLA (Full Load Amperes) of the motor and thus the overload heater pack setting.

Example: 600% of current rating is defined as 750% (600 x 1.25) of FLA current (heater) setting for a 1.15 service factor motor. A 10A heater setting must trip in 20 seconds or less at 75A motor current for a Class 20 relay.

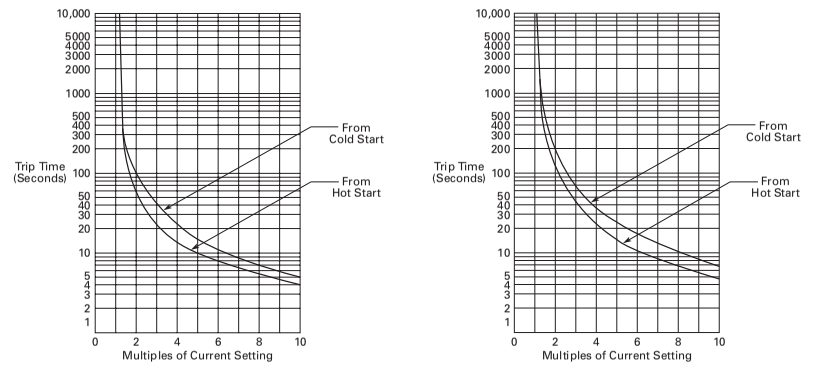

Figure 18-7. Class 10 and Class 20 Trip Curves

Relays

Table 18-11. Wire (75°C) Sizes — AWG or kcmil — NEMA Sizes 00 – 2 — Open

NEMA Size	Cu Only
Power Terminals — Line	
00 0 1 2	12 – 16 Stranded, 12 – 14 Solid 8 – 16 Stranded, 10 – 14 Solid 8 – 14 Stranded or Solid 3 – 14 (Upper) and/or 6 – 14 (Lower) Stranded or Solid ①

Power Terminals — Load — Cu Only (Stranded or Solid)

Catalog Number	Terminal	Wire Size
C306DN3B	32A	14 – 6 AWG
C306GN3B	75A	14 – 2 AWG

Control Terminals — Cu Only

12 – 16 AWG Stranded, 12 – 14 AWG Solid

① Two compartment box lug.

Table 18-12. Wire (75°C) Sizes — AWG or kcmil — NEMA Sizes 3 – 8 — Open

NEMA Size	Wire Size
Power Terminals — Line and Load	
3	1/0 – 14 Cu/Al
4	Open — 3/0 – 8 Cu Enclosed — 250 kcmil — 6 Cu/Al
5 6 – 7 8	750 kcmil — 2 or (2) 250 kcmil — 3/0 Cu/Al (2) 750 kcmil — 3/0 Cu/Al (2) 750 kcmil — 1/0 Cu/Al
Control Terminals — Cu Only	
12 – 16 AWG Stranded, 12 – 14 AWG Solid	

Table 18-13. Power Terminal Torque Line and Load Terminals

Terminal	Catalog Number	Torque in lb-in
32A	C306DT3B	20
75A	C306GT3B	35 (14 – 10 AWG) 40 (8 AWG) 45 (6 – 4 AWG) 50 (3 – 2 AWG)
105A	C306KN3 (Socket Head Screw)	120 (3/16) 200 (1/4) 250 (5/16)
144A	C306NN3 (Socket Head Screw)	120 (3/16) 200 (1/4) 250 (5/16)
	C306NN3 (Slotted Head Screw)	35 (14 – 10 AWG) 40 (8 AWG) 45 (6 – 4 AWG) 50 (3 – 1/0 AWG)

Table 18-14. Plugging and Jogging Service Horsepower Ratings ②

NEMA Size	200V	230V	460V	575V
00	—	1/2	1/2	1/2
0	1-1/2	1-1/2	2	2
1	3	3	5	5
2	7-1/2	10	15	15
3	15	20	30	30
4	25	30	60	60
5	60	75	150	150
6	125	150	300	300

② Maximum horsepower where operation is interrupted more than 5 times per minute or more than 10 times in a 10 minute period. NEMA standard ICS 2-1993 table 2-4-3.

Table 18-15. Overload Relay UL/CSA Contact Ratings Control Circuit ③

AC Volts	120V	240V	480V	600V
NC Contact B600				
Make and Break Amps	30	15	7.5	6
Break Amps	3	1.5	.75	.6
Continuous Amps	5	5	5	5
NO Contact C600				
Make and Break Amps	15	7.5	3.375	3
Break Amps	1.5	.75	.375	.3
Continuous Amps	2.5	2.5	2.5	2.5

③ DC ratings cover Freedom Series coils only.

Table 18-16. C306 Stand-Alone Overload Relays — Approximate Dimensions and Shipping Weight

Ampere Size	Dimensions in Inches (mm)							Ship. Wt. Lbs. (kg)
	Wide A	High B	Deep C	Mounting D	Mounting E	Mounting F (Slot)	Mounting G (Hole)	
32A	1.77 (45.0)	4.13 (104.9)	3.69 (93.7)	1.36 (34.5)	3.74 (95.0)	.18 x .30 (4.6 x 7.6)	.18 (4.6) Dia.	.8 (.4)
75A	2.54 (64.5)	4.69 (119.1)	3.74 (95.0)	2.00 (50.8)	3.45 (87.6)	.22 x .26 (5.6 x 6.6)	.21 (5.3) Dia.	1.4 (.6)
105 & 144A	4.00 (101.6)	7.17 (182.1)	4.91 (124.7)	3.00 (76.2)	6.62 (168.1)	—	—	4.0 (1.8)

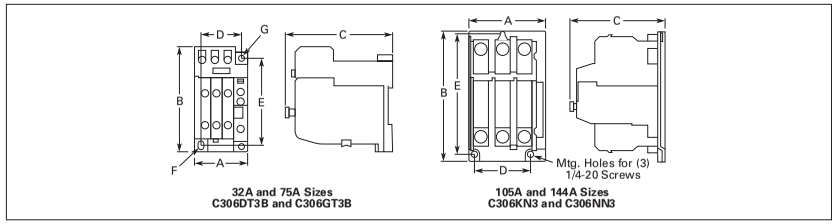

Figure 18-8. Approximate Dimensions — Stand-Alone Overload Relays

Sample Specification

NEMA Advantage Combination Starter

Furnish as indicated Cutler-Hammer® Class ECA combination starters manufactured by Eaton's electrical business or approved equal. All starters shall be UL listed and conform to the latest NEMA Standards and the National Electric Code.

Table 18-17. Non-reversing

Description	Catalog Number
Disconnect Switch	**ECA16**
Disconnect Switch with Control Power Transformer	**ECA18**
Circuit Breaker (HMCPE/HMCP)	**ECA22**
Circuit Breaker with Control Power Transformer	**ECA24**

Table 18-18. Reversing

Description	Catalog Number
Disconnect Switch	**ECA17**
Circuit Breaker (HMCPE/HMCP)	**ECA23**

General

- All motor starters shall be NEMA Sizes 1 – 6.
- Overload relays shall be solid-state and provide motor protection accuracy to 2%. Phase loss, phase unbalance protection and Class II ground fault protection shall be included as standard. The overload relay shall be heaterless and capable of selecting Class 10, 20 or 30 protection. Full-load current settings shall be set with DIP switches. Optional electrical reset with trip indication is available.
- Control circuit transformers, where specified, shall be encapsulated. Primary and secondary fusing shall be provided. Unless otherwise specified, the secondary shall be 120V AC. 100 VA is minimum.
- Pilot devices, where specified, shall be oiltight and mounted in the flange. Pilot lights shall be transformer type for longer lamp life. Pilot device legend plates shall be engraved aluminum.

Enclosure

- Enclosures shall be Type 1, 3R, 4, 4X, 7/9 or 12, as scheduled.
- The operating mechanism shall be mounted on the flange and shall have positive, non-teasing ON/OFF action. The handle shall be color-coded: red for ON and black for OFF.
- The operating handle shall have a means to lock the handle in the OFF position with a minimum of three standard padlocks having 1/4 inch diameter shackles.
- The enclosure sub-panel shall be easily removed without disturbing the operating mechanism on Sizes 0 – 3.
- Enclosures shall have means for locking the cover.

Short Circuit Protective Device

Disconnect Switch

- Where specified, a disconnect switch with double break, rotary blades and quick make/quick break action shall be provided.
- A line shield with test probe holes for inspection shall be provided. The shield shall be removable.
- The switch shall have readily visible blades in the open (OFF) position.
- The fusible disconnect switch (through 100A) shall have built-in fuse pullers to make it easier to remove fuses.

Circuit Breaker

- Where specified, an adjustable instantaneous trip, magnetic only circuit breaker shall be provided.
- A manual push-to-trip button shall be provided to exercise the trip unit.

Short Circuit Rating

- Fusible disconnect switches shall be UL listed for 100,000 amperes available when Class R fuses are used.
- Combination starters with adjustable instantaneous trip, magnetic only circuit breakers shall be UL listed for 100,000 amperes available through 480V AC.

18

Technical Data

Table 18-19. Electrical Characteristics, Sizes 1 – 6

Description	Size 1	Size 2	Size 3	Size 4	Size 5	Size 6
Maximum Voltage Rating	600V	600V	600V	600V	600V	600V
Ampere Rating — Open	30A	50A	100A	150A	300A	600A
— Enclosed	27A	45A	90A	135A	270A	540A
Maximum Horsepower — Squirrel Cage Motor						
200V, 60 Hz	7-1/2 hp	10 hp	25 hp	40 hp	75 hp	150 hp
230V, 60 Hz	7-1/2 hp	15 hp	30 hp	50 hp	100 hp	200 hp
380V, 50 Hz	10 hp	25 hp	50 hp	75 hp	150 hp	300 hp
460 – 575V, 60 Hz	10 hp	25 hp	50 hp	100 hp	200 hp	400 hp
Resistive Heating, kW ① — Three-Phase, 3-Pole						
120V	5 kW	8.5 kW	17 kW	26 kW	52 kW	105 kW
240V	10 kW	17 kW	34 kW	68 kW	105 kW	210 kW
480V	20 kW	34 kW	68 kW	105 kW	210 kW	415 kW
600V	25 kW	43 kW	86 kW	130 kW	260 kW	515 kW
Capacitor Switching kVAR — Three-Phase						
240V	—	12 kVAR	27 kVAR	40 kVAR	80 kVAR	160 kVAR
480V	—	25 kVAR	53 kVAR	80 kVAR	160 kVAR	320 kVAR
600V	—	32 kVAR	67 kVAR	100 kVAR	200 kVAR	400 kVAR
Transformer Switching, kVA ② — Three-Phase, 3-Pole						
208V	3.6 kVA	6.3 kVA	12 kVA	20 kVA	41 kVA	81 kVA
240V	4.3 kVA	7.2 kVA	14 kVA	23 kVA	47 kVA	94 kVA
480V	8.5 kVA	14 kVA	28 kVA	47 kVA	94 kVA	188 kVA
600V	11 kVA	18 kVA	35 kVA	59 kVA	117 kVA	234 kVA

① Resistive loads having inrush currents not exceeding 1.5 times continuous rating.
② Transformers having inrush currents not more than 20 times peak of continuous current ratings.

Table 18-20. 380V, 50 Hz Starters — Maximum Horsepower Ratings

NEMA Size	1	2	3	4	5	6
Maximum hp	10	25	50	75	150	300

Ground Current Sensing Protection

Eaton's Cutler-Hammer Advantage starters with ground current sensing protection feature provide equipment protection against ground currents between a factory-set low level and a lockout current. It is designed to open the circuit when it senses the low-level and arcing ground currents often occurring in motor branch circuits. This feature is standard with Cutler-Hammer Advantage starters. The ground current sensing protection feature can either be omitted from devices supplied by the factory, or omitted in the field by modifying the device with an Advantage Programming Module (WAPM).

Note: These devices are NOT Ground Fault Interrupters (GFIs) designed to protect people. Additionally, branch circuit short-circuit protective devices are to be used to clear faults that exceed the interrupting rating of the starter.

Table 18-21. Ground Current Sensing

Size	Trip Current	Lockout Current	Trip Time
IL	10	24	.4 sec.
1	10	48	.4 sec.
2	20	86	.4 sec.
3	40	171	.4 sec.
4	60	256	.4 sec.
5	240	1045	.4 sec.
6	240	1045	.4 sec.

The table above gives trip amperes and lockout amperes for each size of the starter. Lockout current is the sum of the phase current and ground current.

Phase Unbalance

If the unbalance of any two phases is greater than 30% of the DIP switch selected trip rating of the starter, a phase unbalance is declared and a trip occurs. No time delay is required for reset. This feature is standard in the Cutler-Hammer Advantage starter. To customize your protection, phase unbalance can be omitted by disabling the protection using an Advantage Programming Module (WAPM).

Phase Loss

The Advantage starter will trip on phase loss, after two seconds, if the current in any one phase is lower than the currents listed in the table below. No time delay is required for reset. Phase loss protection is standard on the Cutler-Hammer Advantage starter. The phase loss protection feature can either be omitted from devices supplied by the factory, or omitted in the field by modifying the device with an Advantage Programming Module (WAPM).

Table 18-22. Phase Trip Time

	Size 1	Size 2	Size 3	Size 4	Size 5	Size 6
Phase Unbalance Level	30% Unbalance					
Phase Unbalance Trip Delay	6 sec.		9 sec.		12 sec.	
Phase Loss Trip after 2 sec. if Phase Current is below:	.15A ③ 1.15A	1.15A	2.5A	2.5A	11A	11A

③ Size 1 Lower Current Range for motor hp range of 1/4 hp to 2 hp at 460V.

Table 18-23. Operating Coil Characteristics at Rated Coil Volts, Sizes 1 – 6

Description	Size 1	Size 2	Size 3	Size 4	Size 5	Size 6
AC Coil						
Burden — Inrush VA	250 VA	250 VA	500 VA	500 VA	2600 VA	2600 VA
Closed VA	25 VA	25 VA	50 VA	50 VA	50 VA	50 VA
Closed Watts	5W	5W	10W	10W	10W	10W
Pick-Up Volts ①	78V	78V	78V	78V	78V	78V
Drop-Out Volts ①	60V	60V	60V	60V	60V	60V
Recommended VA rating for machine tool control power transformers	100 VA	100 VA	150 VA	150 VA	300 VA	300 VA

Note: The above represent typical production test values and should not be interpreted as a guarantee of actual performance.
① Values may vary based upon control power transformer capacities.

Advantage contactors will withstand 110% of their rated voltage continuously without injury to the operating coils and will close successfully at 65% of their rated voltage.

Table 18-24. Mechanical Characteristics — Sizes 1 – 6

Description	Size 1	Size 2	Size 3	Size 4	Size 5	Size 6
Dimensions in Inches (mm)						
Height	6.50 (165.1)	6.50 (165.1)	8.00 (203.2)	8.00 (203.2)	10.08 (256.0)	10.08 (256.0)
Width	2.50 (63.5)	2.50 (63.5)	3.68 (93.5)	3.68 (93.5)	7.07 (179.6)	7.07 (179.6)
Depth	4.96 (126.0)	4.96 (126.0)	6.54 (166.1)	6.54 (166.1)	7.64 (194.1)	7.64 (194.1)
Panel area, square inches	16.25	16.25	29.44	29.44	71.27	71.27
Shipping weight, lbs.	2.00	2.00	6.00	6.00	30.00	30.00
Maximum cable size/phase copper — AWG/MCM ②	8 AWG	4 AWG	250 MCM ②	250 MCM ②	(1) 500 MCM ②	(2) 500 MCM ②
Auxiliary Electrical Circuits Available	8	8	8	8	8	8
Maximum wire size for auxiliary electrical circuit — AWG	12	12	12	12	12	12
Maximum wire size for control circuit — AWG	(2) 14	(2) 14	(2) 14	(2) 14	(2) 14	(2) 14
Mechanical interlock combinations available	Vert. Horiz.	Vert. Horiz.	Vert. Horiz.	Vert. Horiz.	Vert. Horiz.	Vert. Horiz.

② Also referenced as "kcmil" (1990 NEC).

Motor FLA, Three-Phase AC

Table 18-25. Data from Table 430-150 of 1990 NEC

Horsepower	Squirrel Cage AC			
	200V	230V	460V	575V
1/4	1.15	1	.6	.5
1/2	2.3	2.0	1.0	.8
3/4	3.2	2.8	1.4	1.1
1	4.1	3.6	1.8	1.4
1-1/2	6.0	5.2	2.6	2.1
2	7.8	6.8	3.4	2.7
3	11.0	9.6	4.8	3.9
5	17.5	15.2	7.6	6.1
7-1/2	25.3	22	11	9
10	32.2	28	14	11
15	48.3	42	21	17
20	62.1	54	27	22
25	78.2	68	34	27
30	92	80	40	32
40	120	104	52	41
50	150	130	65	52
60	177	154	77	62
75	221	192	96	77
100	286	248	124	99
125	359	312	156	125
150	414	360	180	144
200	552	480	240	192

Note: These current values are for motors running at usual speeds and with normal torque characteristics. Motors for special low speed or high torque may require higher current. In all cases, OL trip current setting should be selected on basis of information on motor nameplate or motor card data.

Table 18-26. Temperature Specifications, Sizes 1 – 6

Ambient Temperature	
Storage	-40° to 100°C (-40° to 212°F)
Operating	-40° to 40°C (-40° to 104°F)
External (NEMA Enclosed)	-40° to 40°C (-40° to 104°F)

Table 18-27. DIP Switch Overload Protection Settings

Reset Method	Position 8
MANUAL (Non-automatic — wait 5 minutes)	0
AUTOMATIC (Reset time is based on protection Class)	1

Overload Class	Position 7	Position 6
10	0	0
20	0	1
30	1	0
None	1	1

Overload Trip Current Settings

Full Voltage Starters

To select the overload current trip setting, find the starter size table. Locate the full load current from motor nameplate in column A or B. Change DIP switch positions 5 – 1 to correspond to the table.

Reduced Voltage Starters

Multiply the full load current from motor nameplate by factor below for your type of reduced voltage starter. Find this adjusted full load current in starter Size table in Column A or B. Change DIP switch positions 5 – 1 to correspond to the table.

Table 18-28. Factor

Catalog Number	Multiplier Factor
W600 Autotransformer	1.0
W700 Part Winding	.5
W800, W890 Wye-Delta	.575

Table 18-29. Size 1 — Lower Current Range

Column A Service Factor 1.15 to 1.25 Min. – Max.	Column B Service Factor 1.0 Min. – Max.	Trip Rating Amperes	DIP Switch Setting ① (Positions) (54321)
.47 – .51	.51 – .56	.59	00000
.52 – .56	.57 – .61	.65	00001
.57 – .61	.62 – .67	.71	00010
.62 – .68	.68 – .74	.78	00011
.69 – .75	.75 – .82	.86	00100
.76 – .82	.83 – .89	.95	00101
.83 – .90	.90 – .98	1.04	00110
.91 – 1.00	.99 – 1.09	1.14	00111
1.01 – 1.09	1.10 – 1.19	1.26	01000
1.10 – 1.21	1.20 – 1.31	1.38	01001
1.22 – 1.33	1.32 – 1.44	1.52	01010
1.34 – 1.46	1.45 – 1.59	1.67	01011
1.47 – 1.61	1.60 – 1.75	1.84	01100
1.62 – 1.77	1.76 – 1.93	2.02	01101
1.78 – 1.95	1.94 – 2.12	2.23	01110
1.96 – 2.14	2.13 – 2.33	2.45	01111
2.15 – 2.36	2.34 – 2.56	2.69	10000
2.37 – 2.60	2.57 – 2.82	2.96	10001
2.61 – 2.85	2.83 – 3.10	3.26	10010
2.86 – 3.14	3.11 – 3.42	3.58	10011
3.15 – 3.46	3.43 – 3.76	3.94	10100
3.47 – 3.81	3.77 – 4.14	4.34	10101

① All settings not shown are equivalent to 00000.

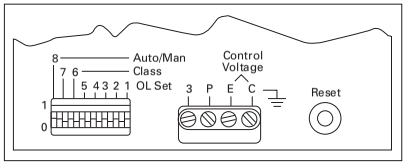

Figure 18-9. DIP Switch, Terminals and Reset

Table 18-30. Size 1 — Upper Current Range

Column A Service Factor 1.15 to 1.25 Min. – Max.	Column B Service Factor 1.0 Min. – Max.	Trip Rating Amperes	DIP Switch Setting ② (Positions) (54321)
3.15 – 3.46	3.43 – 3.75	3.93	00000
3.47 – 3.81	3.76 – 4.13	4.33	00001
3.82 – 4.19	4.14 – 4.55	4.77	00010
4.20 – 4.61	4.56 – 4.99	5.25	00011
4.62 – 5.0	5.00 – 5.4	5.77	00100
5.2 – 5.5	5.5 – 6.0	6.35	00101
5.6 – 6.0	6.1 – 6.5	6.9	00110
6.1 – 6.6	6.6 – 7.2	7.7	00111
6.7 – 7.3	7.3 – 8.0	8.5	01000
7.4 – 8.1	8.1 – 8.8	9.3	01001
8.2 – 8.9	8.9 – 9.6	10.2	01010
9.0 – 9.8	9.7 – 10.6	11.2	01011
9.9 – 0.8	10.7 – 11.7	12.4	01100
10.9 – 11.9	11.8 – 12.9	13.6	01101
12.0 – 13.1	13.0 – 14.2	15.0	01110
13.2 – 14.4	14.3 – 15.7	16.5	01111
14.5 – 15.8	15.8 – 17.2	18.1	10000
15.9 – 17.4	17.3 – 18.9	19.9	10001
17.5 – 19.2	19.0 – 20.9	21.9	10010
19.3 – 21.1	21.0 – 22.9	24.1	10011
21.2 – 23.3	23.0 – 25.2	26.5	10100
23.4 – 25.6	25.3 – 27.0	29.1	10101
25.7 – 27.0	— —	32.1	10110

② All settings not shown are equivalent to 00000.

Table 18-31. Size 2 — Current Range

Column A Service Factor 1.15 to 1.25 Min. – Max.	Column B Service Factor 1.0 Min. – Max.	Trip Rating Amperes	DIP Switch Setting ③ (Positions) (54321)
3.15 – 3.46	3.43 – 3.75	3.93	00000
3.47 – 3.81	3.76 – 4.13	4.33	00001
3.82 – 4.19	4.14 – 4.55	4.77	00010
4.20 – 4.61	4.56 – 4.99	5.25	00011
4.62 – 5.0	5.00 – 5.4	5.77	00100
5.1 – 5.5	5.5 – 6.0	6.35	00101
5.6 – 6.0	6.1 – 6.5	6.9	00110
6.1 – 6.6	6.6 – 7.2	7.7	00111
6.7 – 7.3	7.3 – 8.0	8.5	01000
7.4 – 8.1	8.1 – 8.8	9.3	01001
8.2 – 8.9	8.9 – 9.6	10.2	01010
9.0 – 9.8	9.7 – 10.6	11.2	01011
9.9 – 10.8	10.7 – 11.7	12.4	01100
10.9 – 11.9	11.8 – 12.9	13.6	01101
12.0 – 13.1	13.0 – 14.2	15.0	01110
13.2 – 14.4	14.3 – 15.7	16.5	01111
14.5 – 15.8	15.8 – 17.2	18.1	10000
15.9 – 17.4	17.3 – 18.9	19.9	10001
17.5 – 19.2	19.0 – 20.9	21.9	10010
19.3 – 21.1	21.0 – 22.9	24.1	10011
21.2 – 23.2	23.0 – 25.2	26.5	10100
23.3 – 25.6	25.3 – 27.8	29.1	10101
25.7 – 28.1	27.9 – 30.5	32.1	10110
28.2 – 31.0	30.6 – 33.7	35.3	10111
31.1 – 34.1	33.8 – 37.0	38.9	11000
34.2 – 37.5	37.1 – 40.7	42.8	11001
37.6 – 41.2	40.8 – 44.8	47.0	11010
41.3 – 45.0	44.9 – 45.0	51.6	11011

③ All settings not shown are equivalent to 00000.

Overload Trip Current Settings (Continued)

Table 18-32. Size 3 Current Range

Column A Service Factor 1.15 to 1.25 Min.	Max.	Column B Service Factor 1.0 Min.	Max.	Trip Rating Amperes	DIP Switch Setting ① (Positions) (54321)
9.9 –	10.8	10.8 –	11.7	12.4	00000
10.9 –	11.9	11.8 –	12.9	13.6	00001
12.0 –	13.1	13.0 –	14.2	15.0	00010
13.2 –	14.4	14.3 –	15.6	16.5	00011
14.5 –	15.8	15.7 –	17.2	18.1	00100
15.9 –	17.3	17.3 –	18.9	19.9	00101
17.5 –	19.2	19.0 –	20.9	21.9	00110
19.3 –	21.1	21.0 –	22.9	24.1	00111
21.2 –	23.2	23.0 –	25.2	26.5	01000
23.3 –	25.6	25.3 –	27.8	29.1	01001
25.7 –	28.1	27.9 –	30.6	32.1	01010
28.2 –	30.9	30.7 –	33.6	35.3	01011
31.0 –	34.1	33.7 –	37.0	38.8	01100
34.2 –	37.5	37.1 –	40.8	42.7	01101
37.6 –	41.3	40.9 –	44.9	47.0	01110
41.4 –	45.4	45.0 –	49.4	51.7	01111
45.5 –	50.0	49.5 –	54.3	56.9	10000
50.1 –	54.9	54.4 –	59.7	62.6	10001
55.0 –	60.5	59.8 –	65.7	68.8	10010
60.6 –	66.5	65.8 –	72.3	75.7	10011
66.6 –	73.2	72.4 –	79.6	83.3	10100
73.3 –	80.7	79.7 –	87.7	91.6	10101
80.8 –	88.7	87.8 –	90.0	101.0	10110
88.8 –	90.0	—	—	111.0	10111

① All settings not shown are equivalent to 00000.

Table 18-33. Size 4 Current Range

Column A Service Factor 1.15 to 1.25 Min.	Max.	Column B Service Factor 1.0 Min.	Max.	Trip Rating Amperes	DIP Switch Setting ② (Positions) (54321)
9.9 –	10.8	10.8 –	11.7	12.4	00000
10.9 –	11.9	11.8 –	12.9	13.6	00001
12.0 –	13.1	13.0 –	14.2	15.0	00010
13.2 –	14.4	14.3 –	15.6	16.5	00011
14.5 –	15.8	15.7 –	17.2	18.1	00100
15.9 –	17.4	17.3 –	18.9	19.9	00101
17.5 –	19.2	19.0 –	20.9	21.9	00110
19.3 –	21.1	21.0 –	22.9	24.1	00111
21.2 –	23.2	23.0 –	25.2	26.5	01000
23.3 –	25.6	25.3 –	27.8	29.1	01001
25.7 –	28.1	27.9 –	30.6	32.1	01010
28.2 –	30.9	30.7 –	33.6	35.3	01011
31.0 –	34.1	33.7 –	37.0	38.8	01100
34.2 –	37.5	37.1 –	40.8	42.7	01101
37.6 –	41.3	40.9 –	44.9	47.0	01110
41.4 –	45.4	45.0 –	49.4	51.7	01111
45.5 –	50.0	49.5 –	54.3	56.9	10000
50.1 –	54.9	54.4 –	59.7	62.6	10001
55.0 –	60.5	59.8 –	65.7	68.8	10010
60.6 –	66.5	65.8 –	72.3	75.7	10011
66.6 –	73.2	72.4 –	79.6	83.3	10100
73.3 –	80.7	79.7 –	87.7	91.6	10101
80.8 –	88.7	87.8 –	96.4	101	10110
88.8 –	97.5	96.5 –	105	111	10111
97.6 –	106	106 –	116	122	11000
107 –	117	117 –	127	134	11001
118 –	129	128 –	133	147	11010
130 –	133	—	—	162	11011

② All settings not shown are equivalent to 00000.

Table 18-34. Size 5 Current Range

Column A Service Factor 1.15 to 1.25 Min.	Max.	Column B Service Factor 1.0 Min.	Max.	Trip Rating Amperes	DIP Switch Setting ③ (Positions) (54321)
38.3 –	41.9	41.7 –	45.6	47.9	00000
42.0 –	46.1	45.7 –	50.1	52.5	00001
46.2 –	51.0	50.2 –	55.5	57.7	00010
51.1 –	55.9	55.6 –	60.8	63.9	00011
56.0 –	61.7	60.9 –	67.1	70.0	00100
61.8 –	67.5	67.2 –	73.4	77.3	00101
67.6 –	74.9	73.5 –	81.4	84.5	00110
75.0 –	82.3	81.5 –	89.5	93.7	00111
82.4 –	90.3	89.6 –	98.2	103	01000
90.4 –	99.9	98.3 –	108	113	01001
100 –	109	109 –	118	125	01010
110 –	120	119 –	130	137	01011
121 –	132	131 –	143	151	01100
133 –	145	144 –	157	166	01101
146 –	159	158 –	173	182	01110
160 –	175	174 –	190	200	01111
176 –	193	191 –	209	220	10000
194 –	213	210 –	231	242	10001
214 –	233	232 –	254	267	10010
234 –	257	255 –	270	293	10011
258 –	270	—	—	322	10100

③ All settings not shown are equivalent to 00000.

Table 18-35. Size 6 Current Range

Column A Service Factor 1.15 to 1.25 Min.	Max.	Column B Service Factor 1.0 Min.	Max.	Trip Rating Amperes	DIP Switch Setting ④ (Positions) (54321)
38.3 –	41.9	41.7 –	45.6	47.9	00000
42.0 –	46.1	45.7 –	50.1	52.5	00001
46.2 –	51.0	50.2 –	55.5	57.7	00010
51.1 –	55.9	55.6 –	60.8	63.9	00011
56.0 –	61.7	60.9 –	67.1	70.0	00100
61.8 –	67.5	67.2 –	73.4	77.3	00101
67.6 –	74.9	73.5 –	81.4	84.5	00110
75.0 –	82.3	81.5 –	89.5	93.7	00111
82.4 –	90.3	89.6 –	98.2	103	01000
90.4 –	99.9	98.3 –	108	113	01001
100 –	109	109 –	118	125	01010
110 –	120	119 –	130	137	01011
121 –	132	131 –	143	151	01100
133 –	145	144 –	157	166	01101
146 –	159	158 –	173	182	01110
160 –	175	174 –	190	200	01111
176 –	193	191 –	209	220	10000
194 –	213	210 –	231	242	10001
214 –	233	232 –	254	267	10010
234 –	257	255 –	279	293	10011
258 –	282	280 –	307	322	10100
283 –	311	308 –	338	354	10101
312 –	342	339 –	372	390	10110
343 –	376	373 –	409	429	10111
377 –	414	410 –	450	471	11000
415 –	456	451 –	496	519	11001
457 –	501	497 –	540	571	11010
502 –	540	—	—	628	11011

④ All settings not shown are equivalent to 00000.

Short Circuit Ratings

Table 18-36. Short-Circuit Ratings

Short-Circuit Protective Device (SCPD)	Max. Rating (SCPD)	Circuit Breaker Interrupting Rating	Short-Circuit Withstand Rating Current	Short-Circuit Withstand Rating Voltage	Typical Disconnect Device
Size 1					
Class H Fuse	60A	—	5,000A	600V	30A DS Sw.
Class J, R or T Fuse	60A	—	100,000A 50,000A	480V 600V	30A DS Sw.
			65,000A	600V	100A FD-K Molded Case Sw.
Magnetic Only ① Type CB ②	3A	—	100,000A 25,000A	480V 600V	HMCP HMCPS
	7A	—	100,000A 25,000A	480V 600V	HMCPS
	15A	—	100,000A 25,000A	480V 600V	HMCP
	30A	—	100,000A 25,000A	480V 600V	HMCP
Thermal Magnetic Type CB ③	50A	65,000A 25,000A	65,000A 25,000A	480V 600V	HFD
		100,000A 35,000A	100,000A 35,000A	480V 600V	FDC
Magnetic Only Type CB plus CL ④	30A	—	100,000A	600V	HMCP plus CL
Thermal/Mag. Type CB plus CL ⑤	50A	150,000A	100,000A	600V	HFD plus CL
Size 2					
Class H Fuse	100A	—	5,000A	600V	60A DS Sw.
Class J, R or T Fuse	100A	—	100,000A 50,000A	480V 600V	60A DS Sw.
			65,000A	600V	100A FD-K Molded Case Sw.
Magnetic Only ① Type CB ②	50A	—	100,000A 25,000A	480V 600V	HMCP
Thermal Magnetic Type CB ③	90A	65,000A 25,000A	65,000A 25,000A	480V 600V	HFD
		100,000A 35,000A	100,000A 35,000A	480V 600V	FDC
Magnetic Only Type CB plus CL ④	50A	—	100,000A	600V	HMCP plus CL
Thermal/Mag. Type CB plus CL ⑤	90A	150,000A	100,000A	600V	HFD plus CL
Size 3					
Class H Fuse	350A	—	5,000A	600V	100A DS Sw.
Class R Fuse	200A	—	100,000A 65,000A	480V 600V	100A FD-K Molded Case Sw.
Class J or T Fuse	200A	—	100,000A 65,000A	480V 600V	100A FD-K Molded Case Sw.
Magnetic Only ① Type CB ②	200A	—	100,000A 25,000A	480V 600V	HMCP
Thermal Magnetic	150A	65,000A 25,000A	65,000A 25,000A	480V 600V	HFD
		100,000A 35,000A	100,000A 35,000A	480V 600V	FDC
Magnetic Only Type CB plus CL ④	100A	—	100,000A	600V	HMCP plus CL
Thermal/Mag. Type CB plus CL ⑤	150A	150,000A	100,000A	600V	HFD plus CL
Size 4					
Class H Fuse	500A	—	10,000A	600V	200A DS Sw.
Class J Fuse	400A	—	100,000A 65,000A	480V 600V	250A JD-K Molded Case Sw.
Class R or Class T Fuse	400A	—	100,000A 65,000A	480V 600V	250A JD-K Molded Case Sw.
Magnetic Only ① Type CB ②	150A	—	100,000A 50,000A	480V 600V	HMCP
Thermal Magnetic Type CB ③	250A	100,000A 35,000A	100,000A 50,000A	480V 600V	JDC
		65,000A 25,000A	65,000A 25,000A	480V 600V	HJD
Magnetic Only Type CB plus CL ④	150A	—	100,000A	600V	HMCP plus CL
Size 5					
Class H Fuse	600A	—	10,000A	600V	400A KD-K Molded Case Sw.
Class J, R or T Fuse	600A	—	100,000A	600V	
Magnetic Only ① Type CB ②	250A	—	100,000A 25,000A	480V 600V	HMCP
	400A	—	100,000A 25,000A	480V 600V	
Thermal Magnetic Type CB ③	400A	65,000A 50,000A 35,000A	65,000A 100,000A 25,000A	480V 600V 600V	HFD KDC HKD
Size 6					
Class J, R or T Fuse	600A	—	100,000A 65,000A	480V 600V	600A LD-K Molded Case Sw.
Class L Fuse	800A	—	100,000A 65,000A	480V 600V	600A LD-K Molded Case Sw.
Magnetic Only ① Type CB ②	600A	—	100,000A 25,000A	480V 600V	HMCP
	800A	—	65,000A 25,000A	480V 600V	Magnetic Only HMCP
Thermal Magnetic Type CB ③	600A	65,000A 25,000A	65,000A 35,000A	480V 600V	HLD
	800A	50,000A 25,000A	65,000A 25,000A	480V 600V	Thermal Magnetic HMC
Thermal/Mag. with CL ⑤	800A	200,000A	100,000A	600V	NB Tri-Pac

① Instantaneous adjustable trip.
② Circuit breaker.
③ Inverse time circuit breaker.
④ Instantaneous adjustable trip with current limiting attachment.
⑤ Inverse time with built-in current limiting attachment.

Sample Specification

Furnish as indicated Eaton Class ECX combination starters manufactured by Eaton's electrical business or approved equal. All starters shall be UL listed and conform to the latest IEC Standards and the National Electric Code.

Table 18-37. Non-reversing

Description	Catalog Number
Disconnect Switch	ECX19
Circuit Breaker (HMCP)	ECX25

Table 18-38. Reversing

Description	Catalog Number
Disconnect Switch	ECX20
Circuit Breaker (HMCP)	ECX26

General

- All motor starters shall be IEC Sizes A – N (60 hp at 460V). Each starter shall have one NO auxiliary contact, or as scheduled.
- Overload relays shall be ambient compensated bimetallic type with interchangeable heaters, calibrated for 1.0 and 1.15 service factor motors. Electrically isolated NO and NC contacts shall be provided on the relay. Visual trip indication shall be standard. A test trip feature shall be provided for ease of trouble-shooting and shall be conveniently operable without removing components or the motor starter. Overload relays may also be solid-state.
- Control circuit transformers, where specified, shall be encapsulated. Primary and secondary fusing shall be provided. Unless otherwise specified, the secondary shall be 120V AC. 50 VA is minimum.
- Pilot devices, where specified, shall be oiltight and mounted in the flange. Pilot lights shall be transformer type for longer lamp life. Pilot device legend plates shall be engraved aluminum.

Enclosure

- Enclosures shall be Type 1, 3R, 4, 4X, 7/9 or 12, as scheduled.
- The operating mechanism shall be mounted on the flange and shall have positive, non-teasing ON/OFF action. The handle shall be color-coded: red for ON and black for OFF.
- The operating handle shall have a means to lock the handle in the OFF position with a minimum of three standard padlocks having 1/4 inch diameter shackles.
- The enclosure sub-panel shall be easily removed without disturbing the operating mechanism.
- Enclosures shall have means for locking the cover.

Short Circuit Protective Device

Disconnect Switch

- Where specified, a disconnect switch with double break, rotary blades and quick make/quick break action shall be provided.
- A line shield with test probe holes for inspection shall be provided. The shield shall be removable.
- The switch shall have readily visible blades in the open (OFF) position.
- The fusible disconnect switch (through 100A) shall have built-in fuse pullers to make it easier to remove fuses.

Circuit Breaker

- Where specified, an adjustable instantaneous trip, magnetic only circuit breaker shall be provided.
- A manual push-to-trip button shall be provided to exercise the trip unit.

Short Circuit Rating

- Fusible disconnect switches shall be UL listed for 100,000 amperes available when Class R fuses are used.
- Combination starters with adjustable instantaneous trip, magnetic only circuit breakers shall be UL listed for 100,000 amperes available through 480V AC.

Technical Data

Instructional Leaflets

Table 18-39. Instructional Leaflets

Publication Number	Description
Pub51210	7 – 15A, B Frame XTCE, XTCEC and XTCF Contactors and Accessories (Inside of Packaging)
Pub51211	18 – 32A, C Frame XTCE and XTCEC Contactors and Accessories (Inside of Packaging)
Pub51221	XTOB, D Frame Overload Relays (Inside of Packaging)
Pub51222	XTOB, B – C Frame Overload Relays (Inside of Packaging)
Pub51237	7 – 12A, B Frame XTCE Contactors and Auxiliary Contacts
Pub51232	18 – 32A, C Frame XTCE Contactors and Auxiliary Contacts
Pub51216	40 – 65A, D Frame XTCE Contactors and Auxiliary Contacts
Pub51203	185 – 500A, L – M Frame XTCE Contactors and Auxiliary Contacts
Pub51215	S-Series 185 – 500A, L – M Frame XTCE Contactors and Auxiliary Contacts
Pub51204	580 – 1000A, N Frame XTCE Contactors and Auxiliary Contacts
Pub51209	1400 – 2000A, P – R Frame XTCE Contactors and Auxiliary Contacts
Pub51213	7 – 150A, B – G Frame XTAE Non-reversing and XTAR Reversing Starters
Pub51217	XTCEXFA and XTCEXSA Front and Side Mount Auxiliary Contacts from 40 – 150A, D – G Frame XTCE Contactors
Pub51212	XTCEXML Mechanical Interlock for 7 – 150A, B – G Frame XTCE Contactors
Pub51214	XTCEXRL Reversing Link Kits for 18 – 32A, C Frame XTCE Contactors
Pub51218	XTCEXTL Lug Kits for 500 – 820A, M – N Frame XTCE Contactors
Pub51219	XTCEXRLB and XTCEXSDLB Reversing and Star-Delta (Wye-Delta) Link Kits for 7 – 12A, B Frame XTCE Contactors
Pub51205	Accessories for 185 – 500A, L – M Frame XTCE Contactors
Pub51207	Replacement DC Coils
Pub51213	Renewal Parts — Coils for 18 – 32A, C Frame XTCE Contactors
Pub51186	Renewal Parts — Coils for 40 – 65A, D Frame XTCE Contactors

Coil Data

Frame B – D

Table 18-40. Coil Data — Frame B – D

	XTCE007B	XTCE009B	XTCE012B, XTCF020B	XTCE015B	XTCE018C	XTCE025C	XTCE032C	XTCE040D	XTCE050D	XTCE065D
Voltage Tolerance										
Pick-Up (x U_C)										
AC operated	0.8 – 1.1	0.8 – 1.1	0.8 – 1.1	0.8 – 1.1	0.8 – 1.1	0.8 – 1.1	0.8 – 1.1	0.8 – 1.1	0.8 – 1.1	0.8 – 1.1
DC operated	0.8 – 1.1 ①	0.8 – 1.1 ①	0.8 – 1.1 ①	0.8 – 1.1 ①	0.7 – 1.2 ②	0.7 – 1.2 ②	0.7 – 1.2 ②	0.7 – 1.2 ②	0.7 – 1.2 ②	0.7 – 1.2 ②
Drop-Out (x U_C)										
AC operated	0.3 – 0.6	0.3 – 0.6	0.3 – 0.6	0.3 – 0.6	0.3 – 0.6	0.3 – 0.6	0.3 – 0.6	0.3 – 0.6	0.3 – 0.6	0.3 – 0.6
DC operated	0.15 – 0.6	0.15 – 0.6	0.15 – 0.6	0.15 – 0.6	0.15 – 0.6	0.15 – 0.6	0.15 – 0.6	0.15 – 0.6	0.15 – 0.6	0.15 – 0.6
Power Consumption of the coil at cold state and 1.0 x U_C										
AC operated										
Single-voltage coil 50 Hz										
Pick-Up VA	24	24	24	24	52	52	52	149	149	149
Pick-Up W	19	19	19	19	40	40	40	80	80	80
Sealing VA	3.4	3.4	3.4	3.4	7.1	7.1	7.1	16	16	16
Sealing W	1.2	1.2	1.2	1.2	2.1	2.1	2.1	4.3	4.3	4.3
Single-voltage coil 60 Hz										
Pick-Up VA	30	30	30	30	67	67	67	178	178	178
Pick-Up W	23	23	23	23	50	50	50	117	117	117
Sealing VA	4.4	4.4	4.4	4.4	8.7	8.7	8.7	19	19	19
Sealing W	1.4	1.4	1.4	1.4	2.6	2.6	2.6	5.3	5.3	5.3
50/60 Hz										
Pick-Up VA	27	27	27	27	62	62	62	168	168	168
	25	25	25	25	58	58	58	154	154	154
Pick-Up W	22	22	22	22	48	48	48	120	120	120
	21	21	21	21	43	43	43	43	43	43
Sealing VA	4.2	4.2	4.2	4.2	9.1	9.1	9.1	22	22	22
	3.3	3.3	3.3	3.3	6.5	6.5	6.5	14	14	14
Sealing W	1.4	1.4	1.4	1.4	2.5	2.5	2.5	5.3	5.3	5.3
	1.2	1.2	1.2	1.2	2	2	2	4.3	4.3	4.3
DC operated										
Pick-Up W	3	3	4.5	4.5	12 at 24V	12 at 24V	12 at 24V	24 at 24V	24 at 24V	24 at 24V
Sealing W	3	3	4.5	4.5	0.5 at 24V	0.5 at 24V	0.5 at 24V	0.5 at 24V	0.5 at 24V	0.5 at 24V
Duty Factor (%DF)	100	100	100	100	100	100	100	100	100	100
Switching Time at 100% U_C (approximate values)										
Main Contact										
AC operated										
Closing delay (mS)	<21	<21	<21	<21	<22	<22	<22	<18	<18	<18
Opening delay (mS)	<18	<18	<18	<18	<14	<14	<14	<13	<13	<13
DC operated										
Closing delay (mS)	<31	<31	<31	<31	<47	<47	<47	<54	<54	<54
Opening delay (mS)	<12	<12	<12	<12	<30	<30	<30	<24	<24	<24
Arcing time (mS)	10	10	10	10	10	10	10	10	10	10
Electromagnetic Compatibility (EMC)										
Emitted interference	To EN-60947-1									
Noise Immunity	To EN-60947-1									

① 0.7 – 1.3 without additional auxiliary contact modules and ambient temperature +40°C [104°F].

② Coil Suffix TD: U_{min} 24V DC/U_{max} 27V DC.
Coil Suffix WD: U_{min} 48V DC/U_{max} 60V DC.
Coil Suffix AD: U_{min} 110V DC/U_{max} 130V DC.
Coil Suffix BD: U_{min} 200V DC/U_{max} 240V DC.
Example:
$U_c = 0.7 \times U_{min} — 1.2 \times U_{max}$
$U_c = 0.7 \times 24V — 1.2 \times 27V$ DC

Frame F – G

Table 18-41. Coil Data — Frame F – G

	XTCE80F	XTCE95F	XTCE115G	XTCE150G
Voltage Tolerance				
Pick-Up (x U_C)				
AC operated	0.8 – 1.1	0.8 – 1.1	0.8 – 1.1	0.8 – 1.1
DC operated	0.7 – 1.2 ①	0.7 – 1.2 ①	0.7 – 1.2 ①	0.7 – 1.2 ①
Drop-Out (x U_C)				
AC operated	0.3 – 0.6	0.3 – 0.6	0.25 – 0.6	0.25 – 0.6
DC operated	0.15 – 0.6	0.15 – 0.6	0.15 – 0.6	0.15 – 0.6
Power Consumption of the coil at cold state and 1.0 x U_C				
AC operated				
Single-voltage coil 50 Hz				
Pick-Up VA	310	310	180	180
Pick-Up W	165	165	130	130
Sealing VA	26	26	3.1	3.1
Sealing W	5.8	5.8	2.1	2.1
Single-voltage coil 60 Hz				
Pick-Up VA	345	345	170	170
Pick-Up W	190	190	130	130
Sealing VA	30	30	3.1	3.1
Sealing W	7.1	7.1	2.1	2.1
50/60 Hz				
Pick-Up VA	372	328	170	170
Pick-Up W	190	190	130	130
Sealing VA	37.1	22.6	3.1	3.1
Sealing W	7.5	6.1	2.1	2.1
DC operated				
Pick-Up W	90 at 24V	90 at 24V	149 at 24V	149 at 24V
Sealing W	1.3 at 24V	1.3 at 24V	2.1 at 24V	2.1 at 24V
Duty Factor (%DF)	100	100	100	100
Switching Time at 100% U_C (approximate values)				
Main Contact				
AC operated				
Closing delay (mS)	<20	<20	<33	<33
Opening delay (mS)	<14	<14	<41	<41
DC operated				
Closing delay (mS)	<45	<45	<35	<35
Opening delay (mS)	<34	<34	<30	<30
Arcing Time (mS)	15	15	15	15
Permissible Residual Current with Actuation of A1 – A2 By the Electronics (with 0 signal) (mA)	≤ 1	≤ 1	≤ 1	≤ 1
Electromagnetic Compatibility (EMC)				
Emitted interference	To EN60947-1			
Noise Immunity	To EN60947-1			

① At 24V: 0.7 – 1.3 without additional auxiliary contact modules and ambient temperature +40°C [104°F].

Frame L – R

Table 18-42. Coil Data — Frame L – R

Description	XTCE185L	XTCE225L, XTCE250L	XTCE300M, XTCE400M	XTCE500M
Voltage Tolerance				
Pick-Up (x U_c) XTCE185L – XTCEC20R XTCS185L – XTCS500M Drop-Out (x U_c) XTCE185L – XTCEC20R XTCS185L – XTCS500M	0.7 x U_{cmin} — 1.15 x U_{cmax} 0.85 x U_{cmin} — 1.1 x U_{cmax} 0.2 x U_{cmin} — 0.6 x U_{cmax} 0.2 x U_{cmin} — 0.4 x U_{cmax}			
Power Consumption of the coil at cold state and 1.0 x U_C				
XTCE185L – XTCEC20R Pick-Up VA Pick-Up W Sealing VA Sealing W	250 ① 200 4.3 3.3	250 ① 200 4.3 3.3	450 ① 350 4.3 3.3	450 ① 350 4.3 3.3
XTCS185L – XTCS500M Pick-Up VA Pick-Up W Sealing VA Sealing W	360 325 4.3 3.3	360 325 4.3 3.3	715 645 4.3 3.3	715 645 4.3 3.3
Duty Factor (%DF)	100	100	100	100
Switching Time at 100% Main Contact U_C (approximate values)				
XTCE185L – XTCEC20R Closing delay (mS) Opening delay (mS) XTCS185L – XTCS500M Closing delay (mS) Opening delay (mS)	<100 <80 <50 <40	<100 <80 <50 <40	<80 <80 <50 <40	<80 <80 <50 <40
Reaction in Threshold and Sealing State Transition Range (XTCE185L – XTCEC20R)				
Voltage interruptions (0 – 0.2 x U_{cmin}) ≤ 10ms (0 – 0.2 x U_{cmin}) > 10ms	Time is bridged successfully Drop-out of the contactor			
Voltage Dips (0.2 – 0.6 x U_{cmin}) ≤ 12ms (0.2 – 0.6 x U_{cmin}) > 12ms (0.6 – 0.7 x U_{cmin})	Time is bridged successfully Drop-out of the contactor Contactor remains switched on			
Excess Voltage (1.15 – 1.3 x U_{cmax}) (>1.3 x U_{cmax}) ≤ 3s (>1.3 x U_{cmax}) > 3s	Contactor remains switched on Contactor remains switched on Drop-out of the contactor			
Pick – Up phase (0 – 0.7 x U_{cmin}) (0.7 x U_{cmin} –1.15 x U_{cmax}) (>1.15 x U_{cmax})	Contactor does not switch on Contactor switches on with certainty Contactor switches on with certainty			
Permissible contact resistance (of the external command device with actuation of A11), Ω	≤ 500	≤ 500	≤ 500	≤ 500
Permissible residual current (with actuation of A11 by the electronics with 0 signal)	≤ 1	≤ 1	≤ 1	≤ 1
SPS Signal Level (A3 – A4) to IEC/EN 61131-2 (Type 2) High Low	15V 5V	15V 5V	15V 5V	15V 5V
Electromagnetic compatibility (EMC)	This product is designed for operation in industrial environments. Usage in domestic areas can cause radio frequency interference (RFI). Noise suppression measures must be provided for the additional interference.			

① Control transformer with U_k ≤6%.

Table 18-42. Coil Data — Frame L – R (Continued)

Description	XTCE580N	XTCE750N, XTCE820N	XTCEC10N	XTCEC14P	XTCEC20R
Voltage Tolerance					
Pick-Up (x U_c) XTCE185L – XTCEC20R XTCS185L – XTCS500M Drop-Out (x U_c) XTCE185L – XTCEC20R XTCS185L – XTCS500M	0.7 x U_{cmin} — 1.15 x U_{cmax} 0.85 x U_{cmin} — 1.1 x U_{cmax} 0.2 x U_{cmin} — 0.6 x U_{cmax} 0.2 x U_{cmin} — 0.4 x U_{cmax}				
Power Consumption of the coil at cold state and 1.0 x U_C					
XTCE185L – XTCEC20R Pick-Up VA Pick-Up W Sealing VA Sealing W	800 ① 700 7.5 6.5	800 ① 700 7.5 6.5	800 ① 700 7.5 6.5	800 ① 700 7.5 6.5	1600 ① 1400 15 13
XTCS185L — XTCS500M Pick-Up VA Pick-Up W Sealing VA Sealing W	— — — —	— — — —	— — — —	— — — —	— — — —
Duty Factor (%DF)	100	100	100	100	100
Switching Time at 100% Main Contact U_C (approximate values)					
XTCE185L – XTCEC20R Closing delay (mS) Opening delay (mS) XTCS185L – XTCS500M Closing delay (mS) Opening delay (mS)	<70 <70 — —	<70 <70 — —	<70 <70 — —	<70 <40 — —	<70 <40 — —
Reaction in Threshold and Sealing State Transition Range (XTCE185L – XTCEC20R)					
Voltage interruptions (0 – 0.2 x U_{cmin}) ≤ 10ms (0 – 0.2 x U_{cmin}) > 10ms	Time is bridged successfully Drop-out of the contactor				
Voltage Dips (0.2 – 0.6 x U_{cmin}) ≤ 12ms (0.2 – 0.6 x U_{cmin}) > 12ms (0.6 – 0.7 x U_{cmin})	Time is bridged successfully Drop-out of the contactor Contactor remains switched on				
Excess Voltage (1.15 – 1.3 x U_{cmax}) (>1.3 x U_{cmax}) ≤ 3s (>1.3 x U_{cmax}) > 3s	Contactor remains switched on Contactor remains switched on Drop-out of the contactor				
Pick – Up phase (0 – 0.7 x U_{cmin}) (0.7 x U_{cmin} –1.15 x U_{cmax}) (>1.15 x U_{cmax})	Contactor does not switch on Contactor switches on with certainty Contactor switches on with certainty				
Permissible contact resistance (of the external command device with actuation of A11), Ω	≤ 500	≤ 500	≤ 500	≤ 500	≤ 500
Permissible residual current (with actuation of A11 by the electronics with 0 signal)	≤ 1	≤ 1	≤ 1	≤ 1	≤ 1
SPS Signal Level (A3 – A4) to IEC/EN 61131-2 (Type 2) High Low	15V 5V	15V 5V	15V 5V	15V 5V	15V 5V
Electromagnetic compatibility (EMC)	This product is designed for operation in industrial environments. Usage in domestic areas can cause radio frequency interference (RFI). Noise suppression measures must be provided for the additional interference.				

① Control transformer with U_k ≤7%.

Contactor Contact Travel Diagrams

The diagrams indicate the closing and travel of the contacts of the contactors and auxiliary contacts at no-load. Tolerances are not taken into consideration.

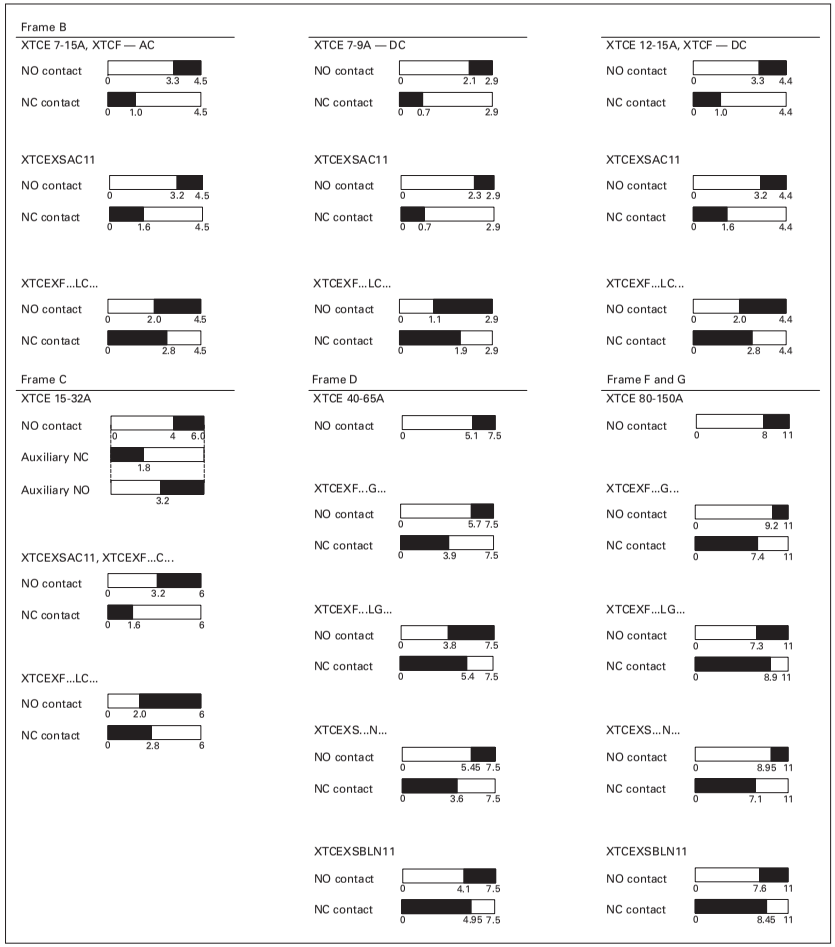

Figure 18-10. Contactor Contact Travel Diagrams

Auxiliary Contacts

Table 18-43. Auxiliary Contacts Technical Data and Specifications

Description	XTCE007B...– XTCE032C	XTCEXFAC... XTCEXFATC...	XTCEXFCC... XTCEXSCC...	XTCEXFAG...	XTCEXSBLN... XTCEXSBN... XTCEXSBNC... XTCEXSCN... XTCEXSCNC...
Interlocked opposing contacts with an auxiliary contact module (to IEC 60947-5-1 Annex L)	—	Yes	Yes	Yes	Yes
Break contact (not late-break contact) suitable as a mirror contact (to IEC/EN 60947-4-1 Annex F)	XTCE007B... – XTCE032C	XTCE007B... – XTCE032C	XTCE007B... – XTCE032C	XTCE040D... – XTCE065D...	XTCE040D... – XTCE065D... XTCE185L... – XTCEC10N...
Rated impulse withstand voltage, (Uimp) V AC	6000	6000	6000	6000	6000
Overvoltage category / pollution degree	III/3	III/3	III/3	III/3	III/3
Rated insulation voltage, (Ui) V AC	690	690	690	690	690
Rated operational voltage, (U_e) V AC	500	500	500	500	500
Safe isolation to VDE 0106 Part 101 and Part 101(A) in V AC Between coil and auxiliary contacts Between the auxiliary contacts	 400 400	 400 400	 400 400	 440 440	 440 440
Rated Operational Current, I_e AC-15 230V 380/415V 500V DC-3 L/R ≤5 mS ① 24V 60V 110V 220V	 6A 4A 1.5A 10A 6A 3A 1A	 6A 3A — 10A 6A 3A 1A	 6A 4A 1.5A 10A 6A 3A 1A	 6A 4A 1.5A 10A 6A 3A 1A	 6A 4A 1.5A 10A 6A 3A 1A
Conventional thermal current, I_{th}	16A	16A	16A ③	10A	10A
Control circuit reliability (at U_e = 24 V DC, U_{min} = 17 V, I_{min} = 5.4 mA)	$<10^{-8}$, < one failure at 100 million operations				
Component Lifespan, Operations x 10^6 at U_e = 230V, AC-15, 3A	1.3	1.3	1.3	1.3	1.3
Short-circuit rating without welding ② Maximum fuse, gG/gL	 10A	 10A	 10A	 16A	 16A

① Making and breaking conditions to DC-13, time L/R contact as stated.
② See fuses overlay for time/current characteristic (on request).
③ Conventional thermal current (I_{th}) of XTCEXSCC_ is 10A.

18

Table 18-44. Parallel Link Technical Data and Specifications

Description	XTCEXPLKB	XTECXPLKC	XTCEXPLKD	XTCEXPLKG	XTCEXPLK185
Terminal Capacity Solid (mm^2)	 1 – 16	 16	 16	 —	 —
Flexible with ferrule (mm^2)	1 x (0.5 – 25) 2 x (0.5 – 16)	1 x (16 – 35)	1 x (16 – 120)	—	—
Stranded (mm^2)	1 x (0.5 – 25) 2 x (0.5 – 16)	1 x (16 – 50)	1 x (16 – 120)	1 x (35 – 300) 2 x (35 – 120)	—
Flat conductor — number of segments x width x thickness (mm)	6 x 9 x 0.8	—	—	2 x (11 x 21 x 1)	1 x (6 x 16 x 0.8) 2 x (20 x 32 x 0.5) 2 x (11 x 21 x 1)
Tightening Torque (Nm)	4	4	14	—	—
Tools Pozidriv screwdriver Hexagon socket head spanner — SW (mm)	 Size 2 —	 Size 2 —	 — 5	 — 6	 — —
Conventional Thermal Current 3-Pole (I_{th}) A 4-Pole (I_{th}) A	 50 60	 100 —	 180 —	 400 —	 — —

Table 18-45. Cable Terminal Block, Flat Cable Terminal Technical Data and Specifications

Description	XTCEXTLA225	XTCEXTLA400	XTCEXPLK185	XTCEXTFB650	XTCEXTFB820
Terminal Capacity Stranded (mm^2)	 1 x (16 – 185) 2 x (16 – 150)	 1 x (120 – 300) 2 x (70 – 240)	—	—	—
Stranded (AWG)	1 x (6 – 350 MCM) 2 x (6 – 300 MCM)	1 x (1/0 – 600 MCM) 2 x (1/0 – 500 MCM)	—	—	—
Flat conductor — number of segments x width x thickness (mm)	1 x (3 x 9 x 0.8) 2 x (10 x 16 x 0.8)	1 x (10 x 16 x 0.8) 2 x (20 x 24 x 0.5) 2 x (11 x 21 x 1)	1 x (6 x 16 x 0.8) 2 x (20 x 32 x 0.5) 2 x (11 x 21 x 1)	1 x (6 x 16 x 0.8) 2 x (20 x 32 x 0.5) 2 x (11 x 21 x 1)	1 x (6 x 16 x 0.8) 2 x (10 x 40 x 1) 2 x (20 x 40 x 0.5)

AC Ratings

Table 18-46. AC Ratings

Description	XTCE007B	XTCE009B	XTCE012B, XTCF020B	XTCE015B	XTCE018C	XTCE025C	XTCE032C
AC-1 Operation							
Conventional Free Air Thermal Current, 3-Pole, 50 – 60 Hz							
Open							
at 40°C (I_{th})	22A	22A	22A	22A	40A	45A	45A
at 50°C (I_{th})	21A	21A	21A	21A	38A	43A	43A
at 55°C (I_{th})	21A	21A	21A	21A	37A	42A	42A
at 60°C (I_{th})	20A	20A	20A	20A	35A	40A	40A
Enclosed	18A	18A	18A	18A	32A	36A	36A
Conventional Free Air Thermal Current, 1-Pole (I_{th})							
Open	50A	50A	50A	50A	85A	85A	85A
Enclosed	45A	45A	45A	45A	80A	80A	80A
AC-3 Operation							
Rated Operational Current, 50/60 Hz ① (I_e) in amperes							
220/230V	7	9	12	15.5	18	25	32
240V	7	9	12	15.5	18	25	32
380/400V	7	9	12	15.5	18	25	32
415V	7	9	12	15.5	18	25	32
440V	7	9	12	15.5	18	25	32
500V	5	7	10	12.5	18	25	32
660/690V	4	5	7	9	12	15	18
1000V	—	—	—	—	—	—	—
Rated power (P) in kilowatts							
220/230V	2.2	2.5	3.5	4	5	7.5	10
240V	2.2	3	4	4.6	5.5	8.5	11
380/400V	3	4	5.5	7.5	7.5	11	15
415V	4	5.5	7	8	10	14.5	19
440V	4.5	5.5	7.5	8.4	10.5	15.5	20
500V	3.5	4.5	7	7.5	12	17.5	23
660/690V	3.5	4.5	6.5	7	11	14	17
1000V	—	—	—	—	—	—	—
AC-4 Operation							
Rated Operational Current, 50/60 Hz ① (I_e) in amperes							
220/230V	5	6	7	7	10	13	15
240V	5	6	7	7	10	13	15
380/400V	5	6	7	7	10	13	15
415V	5	6	7	7	10	13	15
440V	5	6	7	7	10	13	15
500V	4.5	5	6	6	10	13	15
660/690V	4	4.5	5	5	8	10	12
1000V	—	—	—	—	—	—	—
Rated power (P) in kilowatts							
220/230V	1	1.5	2	2	2.5	3.5	4
240V	1.5	1.6	2.2	2.2	3	4	4.5
380/400V	2.2	2.5	3	3	4.5	6	7
415V	2.3	2.8	3.4	3.4	5	6.5	7.5
440V	2.4	3	3.6	3.6	5.5	7	8
500V	2.5	2.8	3.5	3.5	6	8	9
660/690V	2.9	3.6	4.4	4.4	6.5	8.5	10
1000V	—	—	—	—	—	—	—
AC-6A Operation							
Transformer Loads	Values are application specific. Calculation is $I_{eAC-3} = X / 6 * I_e$ Transformer where X is the inrush current of the transformer and I_e Transformer is the nominal current. ②						
AC-6B Operation							
Capacitor Loads Individual compensation rated operational current I_e of three-phase capacitors in amperes Up to 525V 690V	See *XT* Starters in **CA08102001E** for Capacitor Ratings						
Maximum inrush current peak (x I_e)	30	30	30	30	30	30	30
Component Lifesaving (Operations)	—	—	—	—	—	—	—
Maximum Operating Frequency (ops/hr)	—	—	—	—	—	—	—

① At maximum permissible ambient temperature.

② Example —
The transformer has a nominal current of 10A with an inrush current of 18 times the nominal current. So, the contactor must have an AC-3 current of 18/6 x 10A = 30A. Using an XTCE032C (32A AC-3) contactor is recommended.

Table 18-46. AC Ratings (Continued)

Description	XTCE040D	XTCE050D	XTCE065D	XTCE080F	XTCE095F	XTCE115G	XTCE150G
AC-1 Operation							
Conventional Free Air Thermal Current, 3-Pole, 50 – 60 Hz							
Open							
at 40°C (I_{th})	60A	80A	98A	110A	130A	160A	190A
at 50°C (I_{th})	57A	71A	88A	98A	125A	142A	180A
at 55°C (I_{th})	55A	68A	83A	94A	115A	135A	170A
at 60°C (I_{th})	50A	65A	80A	90A	110A	130A	160A
Enclosed	45A	58A	72A	80A	100A	115A	144A
Conventional Free Air Thermal Current, 1-Pole (I_{th})							
Open	125A	162A	200A	225A	275A	325A	400A
Enclosed	112A	145A	180A	200A	250A	285A	360A
AC-3 Operation							
Rated Operational Current, 50/60 Hz ① (I_e) in amperes							
220/230V	40	50	65	80	95	115	150
240V	40	50	65	80	95	115	150
380/400V	40	50	65	80	95	115	150
415V	40	50	65	80	95	115	150
440V	40	50	65	80	95	115	150
500V	40	50	65	80	95	115	150
660/690V	25	32	37	65	80	93	100
1000V	—	—	—	—	—	—	—
Rated power (P) in kilowatts							
220/230V	12.5	15.5	20	25	30	37	48
240V	13.5	17	22	27.5	34	40	52
380/400V	18.5	22	30	37	45	55	75
415V	24	30	39	43	57	70	91
440V	25	32	41	51	60	75	95
500V	28	36	47	58	70	85	110
660/690V	23	30	35	63	75	90	96
1000V	—	—	—	—	—	—	—
AC-4 Operation							
Rated Operational Current, 50/60 Hz ① (I_e) in amperes							
220/230V	18	21	25	40	50	55	65
240V	18	21	25	40	50	55	65
380/400V	18	21	25	40	50	55	65
415V	18	21	25	40	50	55	65
440V	18	21	25	40	50	55	65
500V	18	21	25	40	50	55	65
660/690V	14	17	20	40	50	45	50
1000V	—	—	—	—	—	—	—
Rated power (P) in kilowatts							
220/230V	5	6	7	12	16	17	20
240V	5.5	6.5	7.5	13	17	19	22
380/400V	9	10	12	20	26	28	33
415V	9.5	11	13	24	30	33	39
440V	10	12	14	25	32	35	41
500V	11	13	16	29	36	40	47
660/690V	12	14	17	26	35	43	48
1000V	—	—	—	—	—	—	—
AC-6A Operation							
Transformer Loads	Values are application specific. Calculation is $I_{eAC-3} = X / 6 * I_e$ Transformer where X is the inrush current of the transformer and I_e Transformer is the nominal current. ②						
AC-6B Operation							
Capacitor Loads Individual compensation rated operational current I_e of three-phase capacitors in amperes Up to 525V 690V	See *XT* Starters in **CA08102001E** for Capacitor Ratings						
Maximum inrush current peak (x I_e)	30	30	30	30	30	30	30
Component Lifesaving (Operations)	—	—	—	—	—	—	—
Maximum Operating Frequency (ops/hr)	—	—	—	—	—	—	—

① At maximum permissible ambient temperature.

② Example —
The transformer has a nominal current of 10A with an inrush current of 18 times the nominal current. So, the contactor must have an AC-3 current of 18/6 x 10A = 30A. Using an XTCE032C (32A AC-3) contactor is recommended.

Table 18-46. AC Ratings (Continued)

Description	XTCE185L	XTCE225L	XTCE250L	XTCE300M	XTCE400M	XTCE500M	XTCE580N
AC-1 Operation							
Conventional Free Air Thermal Current, 3-Pole, 50 – 60 Hz							
at 40°C (I_{th})	337	386	429	490	612	857	980
at 50°C (I_{th})	301	345	383	438	548	767	876
at 55°C (I_{th})	287	329	366	418	522	731	836
at 60°C (I_{th})	275	315	350	400	500	700	800
Conventional Free Air Thermal Current, 1-Pole (I_{th})	685	785	875	1000	1250	1750	2000
AC-3 Operation							
Rated Operational Current, 50/60 Hz ① (I_e) in amperes							
220/230V	185	225	250	300	400	500	580
240V	185	225	250	300	400	500	580
380/400V	185	225	250	300	400	500	580
415V	185	225	250	300	400	500	580
440V	185	225	250	300	400	500	580
500V	185	225	250	300	400	500	580
660/690V	185	225	250	300	400	500	580
1000V	76	76	76	95	95	95	435
Rated power (P) in kilowatts							
220/230V	55	70	75	90	125	155	185
240V	62	75	85	100	132	170	200
380/400V	90	110	132	160	200	250	315
415V	110	132	148	180	240	300	348
440V	115	142	157	190	255	345	370
500V	132	160	180	215	290	360	420
660/690V	175	215	240	286	344	344	560
1000V	108	108	108	132	132	132	600
AC-4 Operation							
Rated Operational Current, 50/60 Hz ① (I_e) in amperes							
220/230V	136	164	200	240	296	360	456
240V	136	164	200	240	296	360	456
380/400V	136	164	200	240	296	360	456
415V	136	164	200	240	296	360	456
440V	136	164	200	240	296	360	456
500V	136	164	200	240	296	360	456
660/690V	136	164	200	240	296	296	456
1000V	76	76	76	95	95	95	348
Rated power (P) in kilowatts							
220/230V	41	51	62	75	92	112	143
240V	45	54	68	82	101	122	156
380/400V	75	90	110	132	160	200	250
415V	80	96	117	142	176	216	274
440V	85	102	125	151	186	229	290
500V	96	116	143	172	214	260	330
660/690V	127	155	189	229	283	344	440
1000V	108	108	108	132	132	132	509
AC-6A Operation							
Transformer Loads	Values are application specific. Calculation is $I_{eAC-3} = X / 6 * I_e$ Transformer where X is the inrush current of the transformer and I_e Transformer is the nominal current. ②						
AC-6B Operation							
Capacitor Loads Individual compensation rated operational current I_e of three-phase capacitors in amperes							
Up to 525V	220	220	220	307	307	307	463
690V	133	133	133	177	177	177	265
Maximum inrush current peak (x I_e)	30	30	30	30	30	30	30
Component Lifesaving (Operations)	100,000	100,000	100,000	100,000	100,000	100,000	100,000
Maximum Operating Frequency (ops/hr)	200	200	200	200	200	200	200

① At maximum permissible ambient temperature.
② Example —
The transformer has a nominal current of 10A with an inrush current of 18 times the nominal current. So, the contactor must have an AC-3 current of 18/6 x 10A = 30A. Using an XTCE032C (32A AC-3) contactor is recommended.

Table 18-46. AC Ratings (Continued)

Description	XTCE650N	XTCE750N	XTCE820N	XTCEC10N	XTCEC14P	XTCEC20R
AC-1 Operation						
Conventional Free Air Thermal Current, 3-Pole, 50 – 60 Hz						
at 40°C (I_{th})	1041	1102	1225	1225	1714	2450
at 50°C (I_{th})	931	986	1095	1095	1533	2190
at 55°C (I_{th})	888	940	1044	1044	1462	2089
at 60°C (I_{th})	850	900	1000	1000	1400	2000
Conventional Free Air Thermal Current, 1-Pole (I_{th})	2125	2250	2500	2500	3500	5000
AC-3 Operation						
Rated Operational Current, 50/60 Hz ① (I_e) in amperes						
220/230V	650	750	820	1000	—	—
240V	650	750	820	1000	—	—
380/400V	650	750	820	1000	—	—
415V	650	750	820	1000	—	—
440V	650	750	820	1000	—	—
500V	650	750	820	1000	—	—
660/690V	650	750	820	1000	—	—
1000V	435	580	580	700	—	—
Rated power (P) in kilowatts						
220/230V	205	240	260	315	—	—
240V	225	260	285	340	—	—
380/400V	355	400	450	560	—	—
415V	390	455	500	610	—	—
440V	420	480	525	650	—	—
500V	470	550	600	730	—	—
660/690V	630	720	750	1000	—	—
1000V	600	800	800	1000	—	—
AC-4 Operation						
Rated Operational Current, 50/60 Hz ① (I_e) in amperes						
220/230V	512	576	656	800	—	—
240V	512	576	656	800	—	—
380/400V	512	576	656	800	—	—
415V	512	576	656	800	—	—
440V	512	576	656	800	—	—
500V	512	576	656	800	—	—
660/690V	512	576	656	800	—	—
1000V	348	464	464	700	—	—
Rated power (P) in kilowatts						
220/230V	161	181	209	260	—	—
240V	176	200	228	280	—	—
380/400V	280	315	355	450	—	—
415V	307	346	394	490	—	—
440V	326	367	418	520	—	—
500V	370	417	474	590	—	—
660/690V	494	556	633	780	—	—
1000V	509	678	678	1000	—	—
AC-6A Operation						
Transformer Loads	Values are application specific. Calculation is $I_{eAC-3} = X / 6 * I_e$ Transformer where X is the inrush current of the transformer and I_e Transformer is the nominal current. ②					
AC-6B Operation						
Capacitor Loads Individual compensation rated operational current I_e of three-phase capacitors in amperes						
Up to 525V	463	463	463	463	—	—
690V	265	265	265	265	—	—
Maximum inrush current peak (x I_e)	30	30	30	30	—	—
Component Lifesaving (Operations)	100,000	100,000	100,000	100,000	—	—
Maximum Operating Frequency (ops/hr)	200	200	200	200	—	—

① At maximum permissible ambient temperature.
② Example —
The transformer has a nominal current of 10A with an inrush current of 18 times the nominal current. So, the contactor must have an AC-3 current of 18/6 x 10A = 30A. Using an XTCE032C (32A AC-3) contactor is recommended.

DC Ratings

Table 18-47. DC Ratings — DC-1

Description	XTCE007B	XTCE009B	XTCE012B, XTCF020B	XTCE015B	XTCE018C	XTCE025C	XTCE032C
Rated operation current (1) (I_e) in amperes							
60V	20	20	20	20	35	40	40
110V	20	20	20	20	35	40	40
220V	15	15	15	15	35	40	40
440V	1	1.3	1.3	1.3	2.9	2.9	2.9
	XTCE040D	XTCE050D	XTCE065D	XTCE080F	XTCE095F	XTCE115G	XTCE150G
60V	50	60	72	110	110	160	160
110V	50	50	72	110	110	160	160
220V	45	45	65	70	70	90	90
440V	2.9	2.9	2.9	4.5	4.5	4.5	4.5
	XTCE185L	XTCE225L	XTCE250L	XTCE300M	XTCE400M	XTCE500M	XTCE580N
60V	300	300	300	400	400	400	—
110V	300	300	300	400	400	400	—
220V	300	300	300	400	400	400	—
440V	11	11	11	11	11	11	—
	XTCE650N	XTCE750N	XTCE820N	XTCEC10N	XTCEC14P	XTCEC20R	—
60V	—	—	—	—	—	—	—
110V	—	—	—	—	—	—	—
220V	—	—	—	—	—	—	—
440V	—	—	—	—	—	—	—

Table 18-48. DC Ratings — DC-3

Description	XTCE007B	XTCE009B	XTCE012B, XTCF020B	XTCE015B	XTCE018C	XTCE025C	XTCE032C
Rated operation current (1) (I_e) in amperes							
60V	20	20	20	20	35	35	40
110V	20	20	20	20	35	35	40
220V	1.5	1.5	1.5	1.5	10	10	25
440V	0.2	0.2	0.2	0.2	0.6	0.6	0.6
	XTCE040D	XTCE050D	XTCE065D	XTCE080F	XTCE095F	XTCE115G	XTCE150G
60V	50	60	72	110	110	160	160
110V	50	50	72	110	110	160	160
220V	25	25	35	35	35	40	40
440V	0.6	0.6	0.6	1	1	1	1
	XTCE185L	XTCE225L	XTCE250L	XTCE300M	XTCE400M	XTCE500M	XTCE580N
60V	300	300	300	400	400	400	—
110V	300	300	300	400	400	400	—
220V	300	300	300	400	400	400	—
440V	—	—	—	—	—	—	—
	XTCE650N	XTCE750N	XTCE820N	XTCEC10N	XTCEC14P	XTCEC20R	—
60V	—	—	—	—	—	—	—
110V	—	—	—	—	—	—	—
220V	—	—	—	—	—	—	—
440V	—	—	—	—	—	—	—

Table 18-49. DC Ratings — DC-5

Description	XTCE007B	XTCE009B	XTCE012B, XTCF020B	XTCE015B	XTCE018C	XTCE025C	XTCE032C
Rated operation current (1) (I_e) in amperes							
60V	20	20	20	20	35	35	40
110V	20	20	20	20	35	35	40
220V	1.5	1.5	1.5	1.5	10	10	25
440V	0.2	0.2	0.2	0.2	0.6	0.6	0.6
	XTCE040D	XTCE050D	XTCE065D	XTCE080F	XTCE095F	XTCE115G	XTCE150G
60V	50	60	72	110	110	160	160
110V	50	50	72	110	110	160	160
220V	25	25	35	35	35	40	40
440V	0.6	0.6	0.6	1	1	1	1
	XTCE185L	XTCE225L	XTCE250L	XTCE300M	XTCE400M	XTCE500M	XTCE580N
60V	300	300	300	400	400	400	—
110V	300	300	300	400	400	400	—
220V	300	300	300	400	400	400	—
440V	—	—	—	—	—	—	—
	XTCE650N	XTCE750N	XTCE820N	XTCEC10N	XTCEC14P	XTCEC20R	—
60V	—	—	—	—	—	—	—
110V	—	—	—	—	—	—	—
220V	—	—	—	—	—	—	—
440V	—	—	—	—	—	—	—

Heat Loss

Table 18-50. Current heat loss (3-Pole) in watts

Description	XTCE007B	XTCE009B	XTCE012B, XTCF020B	XTCE015B	XTCE018C	XTCE025C	XTCE032C
Current heat loss (3-Pole) in watts							
at I_{th}	3	3	3	3	7.3	9.6	12.1
at I_e to AC-3/400V	0.37	0.6	1.1	1.8	1.9	3.8	6.1
Impedance per pole, mΩ	2.5	2.5	2.5	2.5	2	2	2
	XTCE040D	XTCE050D	XTCE065D	XTCE080F	XTCE095F	XTCE115G	XTCE150G
Current heat loss (3-Pole) in watts							
at I_{th}	11.3	19	28.8	14.6	21.8	30.4	46.1
at I_e to AC-3/400V	7.2	11.3	19	11.5	16.2	23.8	40.5
Impedance per pole, mΩ	1.5	1.5	1.5	0.6	0.6	0.6	0.6
	XTCE185L	XTCE225L	XTCE250L	XTCE300M	XTCE400M	XTCE500M	XTCE580N
Current heat loss (3-Pole) in watts							
at I_{th}	79	108	95	123	188	236	227
at I_e to AC-3/400V	36	55	48	69	120	120	120
Impedance per pole, mΩ	—	—	—	—	—	—	—
	XTCE650N	XTCE750N	XTCE820N	XTCEC10N	XTCEC14P	XTCEC20R	—
Current heat loss (3-Pole) in watts							
at I_{th}	257	288	355	355	697	711	—
at I_e to AC-3/400V	150	200	239	355	—	—	—
Impedance per pole, mΩ	—	—	—	—	—	—	—

Life Curves

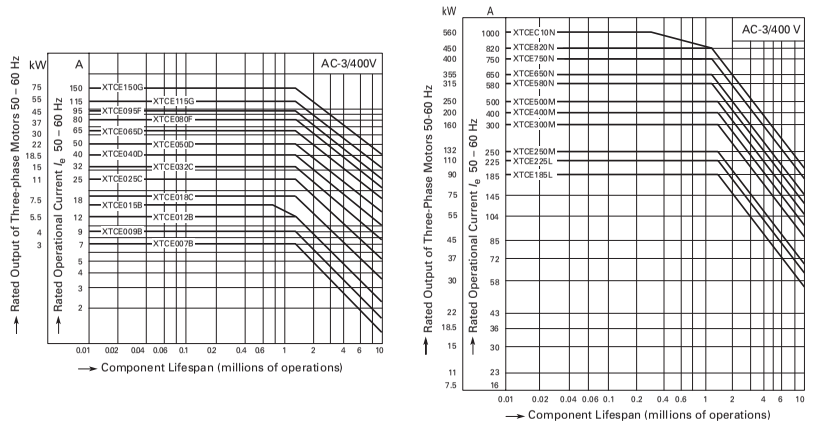

XTCE007B – XTCE150G *XTCE185L – XTCEC10N*

Figure 18-11. Normal Switching Duty

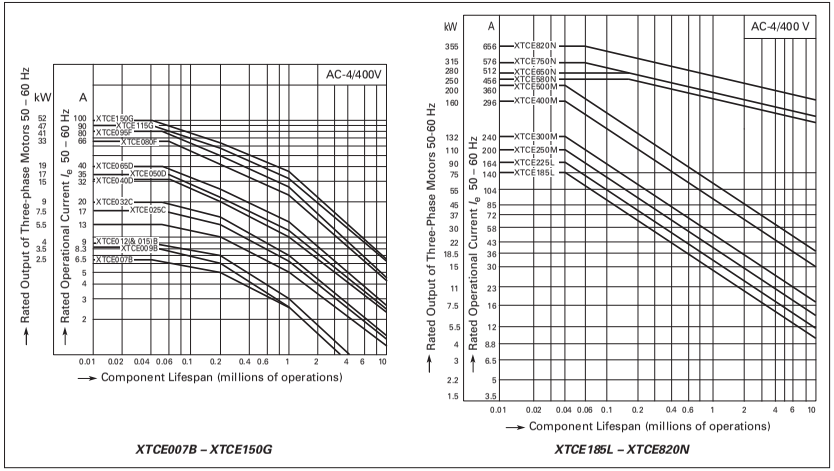

XTCE007B – XTCE150G *XTCE185L – XTCE820N*

Figure 18-12. Extreme Switching Duty

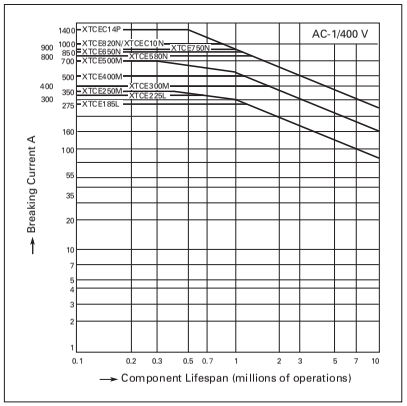

Figure 18-13. Switching Duty for Non-motor loads, 3-pole, 4-pole — XTCE185L – XTCEC14P

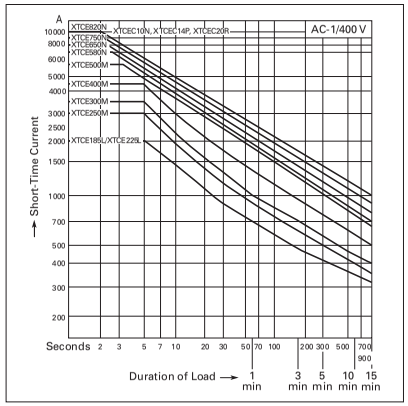

Figure 18-14. Short-Time Loading, 3-pole — XTCE185L – XTCEC20R

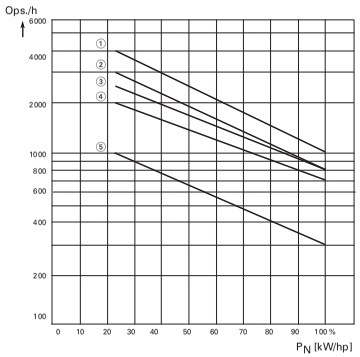

Utilization Category ①

Type	Characteristic Curve Above		
	AC-1	AC-3	AC-2 AC-4
XTCE007B – XTCE015B	3	1	5
XTCE018C – XTCE032C	3	2	5
XTCE040D – XTCE065D	3	2	5
XTCE080F – XTCE150G	3	4	5

① P_N = max. motor rating (kW/hp) of the relevant contactor.
ops./h = max. number of operations per hour.

7 to 150 hp

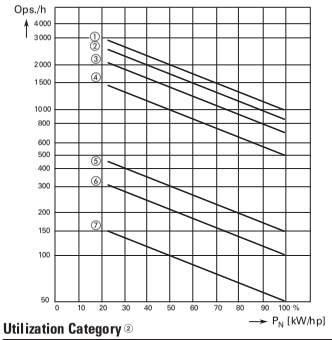

Utilization Category ②

Type	Characteristic Curve Above		
	AC-1	AC-3	AC-4
XTCE185L	2	1	6
XTCE225L	2	1	6
XTCE250L	2	1	6
XTCE300M	3	2	7
XTCE400M	3	2	7
XTCE500M	3	2	7
XTCE580N	3	4	5
XTCE650N	3	4	5
XTCE750N	3	4	5
XTCE820N	3	4	5

② P_N = max. motor rating (kW/hp) of the relevant contactor.
ops./h = max. number of operations per hour.

185 to 820 hp

Figure 18-15. Maximum Operating Frequency — Related to Rating and Utilization Category (400V)

Overload Relays

Table 18-51. XTOB Overload Relay — Technical Data and Specifications

Description	XTOB…BC1, XTOB…CC1	XTOB…DC1	XTOB…GC1, XTOB…GC1S	XTOB...LC1
General				
Standards	IEC/EN 60947, VDE 0660, UL, CSA			
Climate Proofing	Damp heat, constant, to IEC 60068-2-78; Damp heat, cyclic, to IEC 60068-2-30			
Ambient Temperature ①	-25°C to +55°C [-13°F to 131°F]	-25°C to +55°C [-13°F to 131°F]	-25°C to +55°C [-13°F to 131°F]	-25°C to +50°C [-13°F to 22°F]
Temperature Compensation	Continuous	Continuous	Continuous	Continuous
Mechanical Shock Resistance (IEC/EN 60068-2-27) Half-Sinusoidal Shock 10 mS	10g	10g	10g	10g
Degree of Protection	IP20	IP20	IP20	P00
Protection Against Direct Contact when Actuated from Front (IEC 536)	Finger and back of hand proof	Finger and back of hand proof	Finger and back of hand proof	With terminal cover XTOBXTS...L
Insulation Voltage (Ui) V AC	690	690	690	1000
Overvoltage Category / Pollution Degree	III/3	III/3	III/3	III/3
Impulse Withstand Voltage (Uimp) V AC	6000	6000	6000	8000
Operational Voltage (Ue) V AC	690	690	690	1000
Safe Isolation to VDE 0106 Part 101 and part 101/A1 Between auxiliary contacts and main contacts (V AC) Between main contacts (V AC)	 440 440	 440 440	 440 440	 440 440
Overload Release Setting Range	0.1 – 32A	6 – 75A	25 – 150A	50 – 250A
Short Circuit Protection Maximum Fuse	④			
Temperature Compensation Residual Error > 40°C	<0.25	<0.25	<0.25	<0.25
Current Heat Loss (3 Conductors) Lower value of setting range, W Upper value of setting range	 2.5 6	 3 7.5	 16 28	 16 28
Terminal Capacity Solid, mm^2 Flexible with ferrule, mm^2 Flexible with cable lug, mm^2 Stranded with cable lug, mm^2	 2 x (1 – 6) 2 x (1 – 4) 2 x (1 – 6) ② — —	 2 x (1 – 16) 1 x 25 2 x (1 – 10) ③ — —	 2 x (4 – 16) 1 x (4 – 70) 2 x (4 – 50) — —	 — — — 95 120
Solid or Stranded, AWG	14 - 8	14 - 2	2 / 0	250MCM
Flat Conductor (number of segments x width x thickness, mm^2	—	—	—	6 x 16 x 18
Busbar — Width (mm)	—	—	—	20 x 3
Terminal Screw Tightening Torque Nm Lb-in	M4 1.8 16	M6 3.5 31	M10 10 88.5	M8 x 25 24 221.3
Tools Pozidriv screwdriver Standard screwdriver Hexagon socket head spanner (SW)	 Size 2 1 x 6 —	 Size 2 1 x 6 —	 — — 5 mm	 — — 13 mm
Auxiliary and Control Circuit Connections				
Impulse Withstand Voltage (Uimp) V AC	6000	6000	6000	6000
Overvoltage Category/Pollution Degree	III/3	III/3	III/3	III/3
Terminal Capacity Solid, mm^2 Flexible with ferrule, mm^2 Solid or Stranded (AWG)	 2 x (0.75 – 4) 2 x (0.75 – 2.5) 2 x (18 – 12)	 2 x (0.75 – 4) 2 x (0.75 – 2.5) 2 x (18 – 12)	 2 x (0.75 – 4) 2 x (0.75 – 2.5) 2 x (18 – 12)	 2 x (0.75 – 4) 2 x (0.75 – 2.5) 2 x (18 – 12)
Terminal Screw Tightening Torque Nm Lb-in	M3.5 0.8 – 1.2 7 – 10.6	M3.5 0.8 – 1.2 7 – 10.6	M3.5 0.8 – 1.2 7 – 10.6	M3.5 0.8 – 1.2 7 – 10.6
Tools Pozidriv screwdriver Standard screwdriver	 Size 2 1 x 6	 Size 2 1 x 6	 Size 2 1 x 6	 Size 2 1 x 6
Rated Insulated Voltage (Ui) V AC	500	500	500	500
Rated Operational Voltage	500	500	500	500
Safe Isolation to VDE 0106 Part 101 and part 101/A1 Between auxiliary contacts	 240	 240	 240	 240
Conventional Thermal Current, I_{th}	6	6	6	—

① Ambient Temperature Operating Range to IEC/EN 60947, PTB: -5°C to +50°C.
② 6 mm^2 flexible with ferrules to DIN 46228.
③ Main contact terminal capacity, solid and stranded conductors with ferrules: When using 2 conductors use identical cross-section.
④ Consult factory.

Table 18-51. XTOB Overload Relay — Technical Data and Specifications (Continued)

Description	XTOB…BC1, XTOB…CC1	XTOB…DC1	XTOB…GC1, XTOB…GC1S	XTOB...LC1
Auxiliary and Control Circuit Connections (Continued)				
Rated Operational Current — AC-15 Make Contact 120V 240V 415V 500V	 1.5 1.5 0.5 0.5	 1.5 1.5 0.5 0.5	 1.5 1.5 0.5 0.5	 1.5 1.5 0.5 0.5
Break Contact 120V 240V 415V 500V	 1.5 1.5 0.9 0.8	 1.5 1.5 0.9 0.8	 1.5 1.5 0.9 0.8	 1.5 1.5 0.9 0.8
Rated Operational Current — DC-13 L/R ≤ 15 mS ① 24V 60V 110V 220V	 0.9 0.75 0.4 0.2	 0.9 0.75 0.4 0.2	 0.9 0.75 0.4 0.2	 0.9 0.75 0.4 0.2
Short Circuit Rating without Welding Maximum Fuse, A gG/gI	6	6	6	6

① Rated operational current: Making and breaking conditions to DC-13, L/R constant as stated.

Tripping Characteristics

These tripping characteristics are the mean values of the spread at 20°C ambient temperature in a cold state.

Tripping time depends on response current. With devices at operating temperature, the tripping time of the overload relay reduces to approximately 25% of the read off value. Specific characteristics for each individual setting range can be found in MN03402001E.

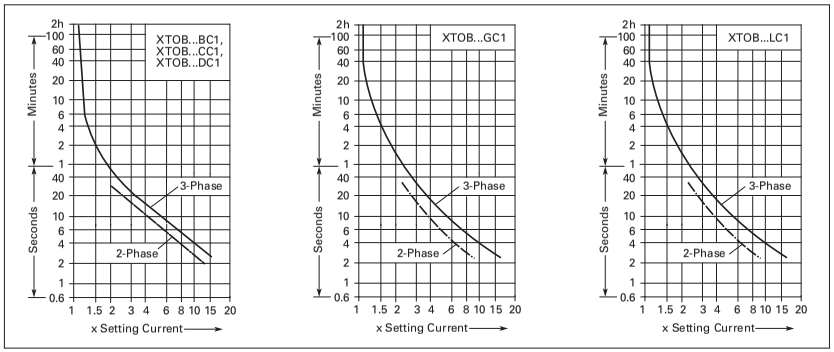

Figure 18-16. Tripping Characteristics

Instructional Leaflets

Table 18-52. Instructional Leaflets

Publication Number	Description
Pub51221	XTOB, D Frame Overload Relays (Inside of Packaging)
Pub51222	XTOB, B – C Frame Overload Relays (Inside of Packaging)

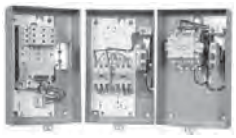

Lighting Contactors

C30CN Lighting Contactors

Main Power Poles

Table 18-53. Maximum AC Voltage and Amp Ratings

Load Type	Amps Continuous	Poles	
		1-Phase	3-Phase
Ballast	30	347V AC	600V AC
General Use	30	600V AC	600V AC
Tungsten	20	277V AC	480V AC
AC Resistive	30	600V AC	600V AC

Table 18-54. Maximum Horsepower Rating

Normal Starting Duty	
1 Pole, Single-Phase	
Volts	**Horsepower**
110 – 120V	1
220 – 240V	2
3 Poles, Three-Phase	
Volts	**Horsepower**
200 – 208V	3
220 – 240V	5
440 – 480V	10
550 – 600V	15

Control Circuit Characteristics

Table 18-55. Coil

Description	VA
Inrush	248 VA
Sealed	28 VA

Table 18-56. Control Module

Input Voltage	Steady State Current @ Rated Voltage (mA)	Maximum VA
12 – 24V DC	42	2
24V AC	80	5
115 – 120V AC	83	12
200 – 277V AC	91	30

Table 18-57. Other Control Module Characteristics

Description	Specification
Minimum pulse duration (3-wire control module)	250 ms
Maximum allowable leakage current	1.8 mA
EMI	35 V/m
Surge transient peak	6 kV
Frequency Range	40 – 70 Hz

Auxiliary Contacts Rating:

A600, 24V DC, 24 VA

Ambient Temperature:

-13 to 104°F (-25 to 40°C)

Mounting Position:

Vertical 3-point mounting only.

Wire Size

Table 18-58. Wire Specifications

Component	Number of Cables	Wire Range (Solid or Stranded)	Wire Temperature
Power Poles	1	14 – 8 AWG	75°C Cu
	2	14 – 8 AWG ①	75°C Cu
Coil	1 or 2	18 – 14 AWG	60°/75°C Cu
Control Module	1	22 – 12 AWG	60°/75°C Cu
Auxiliary Contacts	1 or 2	22 – 12 AWG	60°/75°C Cu

① 8 AWG stranded only.

A202 Lighting Contactors

- Terminals
  - All except 30A devices: Cu/Al
  - 30A devices: Cu only
- Ballast load: 600 AC, breaking all lines
- Tungsten lamp loads, maximum volts
  - Line-to-line: 480V AC
  - Line-to-neutral: 277V AC

Sample Specification

S752 Combination Soft Starters

Furnish as indicated Cutler-Hammer® Class ECS combination starters manufactured by Eaton's electrical business or approved equal. All starters shall be UL listed and conform to the latest IEC and NEMA Standards and the National Electric Code.

Table 18-59. S752

Description	Catalog Number
Disconnect Switch	**ECS91**
Circuit Breaker (HMCPE/HMCP)	**ECS92**

General

- All motor starters shall be fully rated SCR devices up to 50 amperes, with adjustable ramp time from 0.5 to 30 seconds, an initial torque adjustable from 0 – 95%, and a soft stop adjustable up to 30 seconds.
- Overload relays shall be inherent to the soft starter, solid-state and provide motor protection accuracy to 2%. Phase loss and phase unbalance protection shall be included as standard. The overload relay shall be heaterless and capable of selecting Class 10, 20 or 30 protection. Full-load current settings shall be set with dial settings Auto/Manual. Trip reset to be selectable. Digital Fault/Status display inherent to overload.
- 24V DC power supplies are supplied as standard and are available with primary ratings from 480 – 120V AC and have ratings available from 10 – 160 Watts. Power supplies are equipped with built-in short-circuit protection.
- Control circuit transformers, where specified, shall be encapsulated. Primary and secondary fusing shall be provided. Unless otherwise specified, the secondary shall be 120V AC. 100 VA is minimum.
- Pilot devices, where specified, shall be oiltight and mounted in the flange. Pilot lights shall be transformer type for longer lamp life. Pilot device legend plates shall be engraved aluminum.
- Running bypass contactor shall be supplied integral to the soft starter and capable of handling full load amperage.
- Option available for full-voltage emergency bypass contactor.
- Communication modules to snap-on to soft starter to enable control network connectivity.

Enclosure

- Enclosures shall be Type 1, 3R, 4, 4X, 7/9 or 12, as scheduled.
- The operating mechanism shall be mounted on the flange and shall have positive, non-teasing ON/OFF action. The handle shall be color-coded: red for ON and black for OFF.
- The operating handle shall have a means to lock the handle in the OFF position with a minimum of three standard padlocks having 1/4 inch diameter shackles.
- The enclosure sub-panel shall be easily removed without disturbing the operating mechanism.
- Enclosures shall have means for locking the cover.

Short Circuit Protective Device

Disconnect Switch

- Where specified, a disconnect switch with double break, rotary blades and quick make/quick break action shall be provided.
- A line shield with test probe holes for inspection shall be provided. The shield shall be removable.
- The switch shall have readily visible blades in the open (OFF) position.
- The fusible disconnect switch (through 100A) shall have built-in fuse pullers to make it easier to remove fuses.

Circuit Breaker

- Where specified, an adjustable instantaneous trip, magnetic only circuit breaker shall be provided.
- A manual push-to-trip button shall be provided to exercise the trip unit.

Short Circuit Rating

- Fusible disconnect switches shall be UL listed for 100,000 amperes available when Class R fuses are used.
- Combination starters with adjustable instantaneous trip, magnetic only circuit breakers shall be UL listed for 100,000 amperes available through 480V AC.

Technical Data

Table 18-60. S752 Open Soft Starters

Soft Starter (Partial Catalog Number)	S752 L01	S752 L02	S752 L04	S752 L09	S752 L16	S752 L27	S752 L50
In-Line Current Capacity	0.8	1.9	4.4	9.0	16	27	50
Inside-the-Delta Current Capacity	1.3	3.2	7.6	15	27	46	78
Dimensions							
Width in Inches (mm)	2.14 (54)	2.14 (54)	2.14 (54)	2.14 (54)	2.14 (54)	2.14 (54)	2.14 (54)
Height in Inches (mm)	7.78 (198)	7.78 (198)	7.78 (198)	7.78 (198)	7.78 (198)	7.78 (198)	7.78 (198)
Depth in Inches (mm)	5.13 (130)	5.13 (130)	5.13 (130)	5.13 (130)	5.13 (130)	5.13 (130)	5.13 (130)
Weight in lbs. (kg)	3.5 (1.6)	3.5 (1.6)	3.5 (1.6)	3.5 (1.6)	3.5 (1.6)	3.5 (1.6)	3.5 (1.6)
Drawing	See **Tab 15**.						
Electrical Characteristics							
Line Voltage (V AC)	200 – 600	200 – 600	200 – 600	200 – 600	200 – 600	200 – 600	200 – 600
Operating Frequency (Hz)	47 – 63	47 – 63	47 – 63	47 – 63	47 – 63	47 – 63	47 – 63
Leakage Current	15 mA AC max.						
Min. Operating Current	100 mA						
Control Voltage (24V DC ±10%)	21.6 – 26.4	21.6 – 26.4	21.6 – 26.4	21.6 – 26.4	21.6 – 26.4	21.6 – 26.4	21.6 – 26.4
Response Time Max.	100 mS	100 mS	100 mS	100 mS	100 mS	100 mS	100 mS
Control Steady State Current	200 mA	200 mA	200 mA	200 mA	200 mA	200 mA	200 mA
Inrush Current (During Bypass)	3.6A @ 50 mS	3.6A @ 50 mS	3.6A @ 50 mS	3.6A @ 50 mS	3.6A @ 50 mS	3.6A @ 50 mS	3.6A @ 50 mS
Control Wiring							
(+ and -) 1 Wire per Terminal	14 – 12 AWG (1.5 – 2.5 mm^2)	14 – 12 AWG (1.5 – 2.5 mm^2)	14 – 12 AWG (1.5 – 2.5 mm^2)	14 – 12 AWG (1.5 – 2.5 mm^2)	14 – 12 AWG (1.5 – 2.5 mm^2)	14 – 12 AWG (1.5 – 2.5 mm^2)	14 – 12 AWG (1.5 – 2.5 mm^2)
(+ and -) 2 Wires per Terminal	14 AWG (1.5 mm^2)	14 AWG (1.5 mm^2)	14 AWG (1.5 mm^2)	14 AWG (1.5 mm^2)	14 AWG (1.5 mm^2)	14 AWG (1.5 mm^2)	14 AWG (1.5 mm^2)
(P,F,1,2,3) 1 Wire per Terminal	22 – 12 AWG (0.5 – 2.5 mm^2)	22 – 12 AWG (0.5 – 2.5 mm^2)	22 – 12 AWG (0.5 – 2.5 mm^2)	22 – 12 AWG (0.5 – 2.5 mm^2)	22 – 12 AWG (0.5 – 2.5 mm^2)	22 – 12 AWG (0.5 – 2.5 mm^2)	22 – 12 AWG (0.5 – 2.5 mm^2)
(P,F,1,2,3) 2 Wires per Terminal	18 – 14 AWG (0.75 – 1.5 mm^2)	18 – 14 AWG (0.75 – 1.5 mm^2)	18 – 14 AWG (0.75 – 1.5 mm^2)	18 – 14 AWG (0.75 – 1.5 mm^2)	18 – 14 AWG (0.75 – 1.5 mm^2)	18 – 14 AWG (0.75 – 1.5 mm^2)	18 – 14 AWG (0.75 – 1.5 mm^2)
Torque (max.)	4.5 lb-in (0.5 Nm)	4.5 lb-in (0.5 Nm)	4.5 lb-in (0.5 Nm)	4.5 lb-in (0.5 Nm)	4.5 lb-in (0.5 Nm)	4.5 lb-in (0.5 Nm)	4.5 lb-in (0.5 Nm)
Driver	0.13 (3.5 mm) Flat	0.13 (3.5 mm) Flat	0.13 (3.5 mm) Flat	0.13 (3.5 mm) Flat	0.13 (3.5 mm) Flat	0.13 (3.5 mm) Flat	0.13 (3.5 mm) Flat
Terminals L1, L2, L3/T1, T2, T3 — Use Class B 75°C copper wire only							
1 Wire per Terminal	14 – 4 AWG (1.5 – 16 mm^2)	14 – 4 AWG (1.5 – 16 mm^2)	14 – 4 AWG (1.5 – 16 mm^2)	14 – 4 AWG (1.5 – 16 mm^2)	14 – 4 AWG (1.5 – 16 mm^2)	14 – 4 AWG (1.5 – 16 mm^2)	14 – 4 AWG (1.5 – 16 mm^2)
2 Wires per Terminal	14 – 6 AWG (1.5 – 12 mm^2)	14 – 6 AWG (1.5 – 12 mm^2)	14 – 6 AWG (1.5 – 12 mm^2)	14 – 6 AWG (1.5 – 12 mm^2)	14 – 6 AWG (1.5 – 12 mm^2)	14 – 6 AWG (1.5 – 12 mm^2)	14 – 6 AWG (1.5 – 12 mm^2)
Torque (max.) 14 – 10 AWG (1.5 – 6 mm^2) 8 AWG (10 mm^2) 6 – 4 AWG (6 – 4 mm^2)	35 lb-in (4 Nm) 40 lb-in (4.5 Nm) 45 lb-in (5 Nm)	35 lb-in (4 Nm) 40 lb-in (4.5 Nm) 45 lb-in (5 Nm)	35 lb-in (4 Nm) 40 lb-in (4.5 Nm) 45 lb-in (5 Nm)	35 lb-in (4 Nm) 40 lb-in (4.5 Nm) 45 lb-in (5 Nm)	35 lb-in (4 Nm) 40 lb-in (4.5 Nm) 45 lb-in (5 Nm)	35 lb-in (4 Nm) 40 lb-in (4.5 Nm) 45 lb-in (5 Nm)	35 lb-in (4 Nm) 40 lb-in (4.5 Nm) 45 lb-in (5 Nm)
Connector Type	Box Lug	Box Lug	Box Lug	Box Lug	Box Lug	Box Lug	Box Lug
Driver	3 mm Hex Key	3 mm Hex Key	3 mm Hex Key	3 mm Hex Key	3 mm Hex Key	3 mm Hex Key	3 mm Hex Key
Environmental Characteristics							
Temperature — Operating (no derating)	-35° – 50°C	-35° – 50°C	-35° – 50°C	-35° – 50°C	-35° – 50°C	-35° – 50°C	-35° – 50°C
Temperature — Derate >50°C (max. 65°C)	-1% per °C	-1% per °C	-1% per °C	-1% per °C	-1% per °C	-1% per °C	-1% per °C
Temperature — Storage	-40° – 80°C	-40° – 80°C	-40° – 80°C	-40° – 80°C	-40° – 80°C	-40° – 80°C	-40° – 80°C
Altitude (Meters) — No Derating	2000	2000	2000	2000	2000	2000	2000
Altitude > 2000M	1% per 100m	1% per 100m	1% per 100m	1% per 100m	1% per 100m	1% per 100m	1% per 100m
Humidity	95% Non-condensing						
Operating Position	Vertical ± 30°						
Impulse Withstand Voltage IEC 947-4-1	4000V	4000V	4000V	4000V	4000V	4000V	4000V
Rated Insulation Voltage (Ui)	660V						
Installation Category	III						
Vibration	IEC 68-2-6 3g 10 – 150 Hz						
Shock	15g	15g	15g	15g	15g	15g	15g
Degree of Protection	IP20	IP20	IP20	IP20	IP20	IP20	IP20
Agency Approvals	UL, CSA, CE						

Voltage Ramp Start

Provides a voltage ramp to the motor resulting in a constant torque increase. The most commonly used form of soft start, this start mode allows you to set the initial torque value and the duration of the ramp to full voltage conditions. Bypass contactor(s) close after ramp time.

- Adjustable initial torque 0 – 95% of locked rotor torque.
- Adjustable ramp time .5 – 30 seconds.

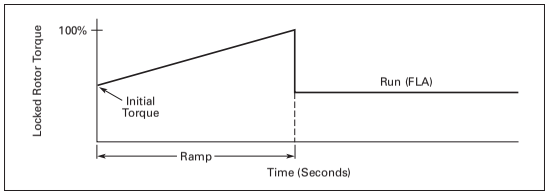

Figure 18-17. Starting Characteristics — Ramp Start

Soft Stop

Allows for a controlled stopping of a load. Used when a stop-time that is greater than the coast-to-stop time is desired. Often used with high friction loads where a sudden stop may cause system or product damage.

- Stop time = 0 – 30 seconds.

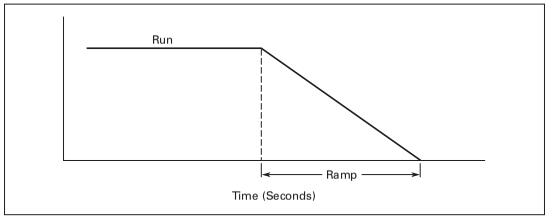

Figure 18-18. Starting Characteristics — Soft Stop

Sample Specification

S801 and S811 Combination Soft Starters

Furnish as indicated Cutler-Hammer® Class ECS combination starters manufactured by Eaton's electrical business or approved equal. All starters shall be UL listed and conform to the latest IEC and NEMA Standards and the National Electric Code.

Table 18-61. S801 Soft Starter

Description	Catalog Number
Disconnect Switch	ECS91
Circuit Breaker (HMCPE/HMCP)	ECS92

Table 18-62. S811 Soft Starter

Description	Catalog Number
Disconnect Switch	ECS94
Circuit Breaker (HMCPE/HMCP)	ECS95

General

- All motor starters shall be fully rated SCR devices up to 1000 amperes, with an adjustable ramp time up to 360 seconds as either current limit or torque, an initial torque kick start adjustable from 0 – 85%, and soft stop adjustable up to 60 seconds.
- Overload relays shall be solid-state and provide motor protection accuracy to 2%. Phase loss and phase unbalance protection shall be included as standard. The overload relay shall be heaterless and capable of selecting Class 10, 20 or 30 protection. Full-load current settings shall be set with dial settings or Control Interface Module.
- 24V DC power supplies are supplied as standard and are available with primary ratings from 480 – 120V AC and have ratings available from 10 – 160 Watts. Power supplies are equipped with a built-in short-circuit protection.
- Control circuit transformers, where specified, shall be encapsulated. Primary and secondary fusing shall be provided. Unless otherwise specified, the secondary shall be 120V AC. 100 VA is minimum.
- Pilot devices, where specified, shall be oiltight and mounted in the flange. Pilot lights shall be transformer type for longer lamp life. Pilot device legend plates shall be engraved aluminum.
- Running bypass contactor shall be supplied integral to the soft starter and capable of handling full load amperage.
- Option available for full-voltage emergency bypass contactor.
- S811 shall have built-in communication port to enable control network connectivity. S801 shall permit communications via smart I/O module enabling control network connectivity.
- S811 shall have a removable Digital Interface Module allowing access to monitor and adjust all parameters. DIM shall be an LCD display.
- S801 shall have a removable Control Interface Module allowing adjustments to Class, FLA, ramp time, stop time, initial torque and protective features.

Enclosure

- Enclosures shall be Type 1, 3R, 4, 4X, 7/9 or 12, as scheduled.
- The operating mechanism shall be mounted on the flange and shall have positive, non-teasing ON/OFF action. The handle shall be color-coded: red for ON and black for OFF.
- The operating handle shall have a means to lock the handle in the OFF position with a minimum of three standard padlocks having 1/4 inch diameter shackles.
- The enclosure sub-panel shall be easily removed without disturbing the operating mechanism.
- Enclosures shall have means for locking the cover.

Short Circuit Protective Device

Disconnect Switch

- Where specified, a disconnect switch with double break, rotary blades and quick make/quick break action shall be provided.
- A line shield with test probe holes for inspection shall be provided. The shield shall be removable.
- The switch shall have readily visible blades in the open (OFF) position.
- The fusible disconnect switch (through 100A) shall have built-in fuse pullers to make it easier to remove fuses.

Circuit Breaker

- Where specified, an adjustable instantaneous trip, magnetic only circuit breaker shall be provided.
- A manual push-to-trip button shall be provided to exercise the trip unit.

Short Circuit Rating

- Fusible disconnect switches shall be UL listed for 100,000 amperes available when Class R fuses are used.
- Combination starters with adjustable instantaneous trip, magnetic only circuit breakers shall be UL listed for 100,000 amperes available through 480V AC.

Technical Data

Table 18-63. Specifications— *IT*. Soft Starter

Soft Starter (Partial Catalog Number)	S801/S811 N37	S801/S811 N66	S801/S811 R10	S801/S811 R13	S801/S811 T18	S801/S811 T24	S801/S811 T30	S801/S811 U36	S801/S811 U42	S801/S811 U50 ①	S801/S811 V36	S801/S811 V42	S801/S811 V50	S801/S811 V65	S801/S811 V72	S801/S811 V85	S801/S811 V10 ②
Max. Current Capacity	37	66	105	135	180	240	304	360	420	500	360	420	500	650	720	850	1000
Dimensions																	
Width in Inches (mm)	2.60 (66.0)		4.37 (111.0)		7.65 (194.4)			7.73 (196.3)			11.03 (280.2)						
Height in Inches (mm)	7.38 (187.4)		7.92 (201.1)		12.71 (322.9)			12.72 (323.1)			16.57 (420.8)						
Depth in Inches (mm)	6.63 (168.4)		7.03 (178.6)		6.69 (169.8)			7.08 (179.9)			7.23 (183.7)						
Weight in lbs. (kg)	5.8 (2.6)		10.5 (4.8)		48 (21.8) w/Lugs 41 (18.6) w/o Lugs			48 (21.8) w/Lugs 41 (18.6) w/o Lugs			103 (46.8) w/Lugs 91 (41.4) w/o Lugs						
General Information																	
Bypass Mechanical Lifespan	10M																
Insulating Voltage Ui	660V																
Ramp Time Range	.5 – 180 Seconds (.5 – 360 Seconds Extended Ramp)																
Resistance to Vibration	3g																
Resistance to Shock	15g																
Electrical Information																	
Operating Voltage	200 – 600V																
Operating Frequency	47 – 63 Hz																
Overload Setting	30 – 100%																
Trip Class	5, 10, 20, & 30																
Cabling Capacity (IEC 947)																	
Number of Conductors	1		1		1 or 2			1 or 2			2, 4 or 6						
Wire Sizes	14 – 2		14 – 4/0		4 AWG to 500 MCM			4 AWG to 500 MCM			2/0 to 500 MCM						
Type of Connectors	Box Lug				Add-On Lug Kit												
Control Wiring (12-Pin)																	
Wire Sizes in AWG	22 – 14																
Number of Conductors (Stranded)	2 (or one AWG 12)																
Torque Requirements in lb-in	3.5																
Solid, Stranded or Flexible Max. Size in mm^2	3.31																
Control Power Requirements																	
Voltage Range (24V ± 10%)	21.6 – 26.4																
Steady State Current Amps	1.0		1.0		1.0			1.0			1.4						
Inrush Current Amps	10		10		10			10			10						
Ripple	1%																
Relays (1) Class A and C																	
Voltage AC — maximum	240																
Voltage DC — maximum	120																
Amps — maximum	3																
Environment																	
Temperature — Operating	-30 – 50°C (No derating) Consult factory for operation > 50° C																
Temperature — Storage	-50 – 70°C																
Altitude	<2000 Meters — Consult factory for operation > 2000m																
Humidity	<95% Non-condensing																
Operating Position	Any																
Pollution degree IEC947-1	3																
Impulse withstand Voltage IEC947-4-1	6000V																

① U-Frame 500 Amp unit does not have IEC Certification.
② UR Recognized Product.

Operation

Starting and Stopping Modes

The S801/S811 have a variety of starting and stopping methods to provide superior performance in the most demanding applications. The motor can be started in either Voltage Ramp Start or Current Limit Start mode. Kick Start and Soft Stop are available within both starting modes.

Voltage Ramp Start

Provides a voltage ramp to the motor resulting in a constant torque increase. The most commonly used form of soft start, this start mode allows you to set the initial torque value and the duration of the ramp to full voltage conditions. Bypass contactors close after ramp time.

- Adjustable initial torque 0 – 85% of locked rotor torque.
- Adjustable ramp time 0.5 – 180 seconds (can be extended with factory modification).

Current Limit Start

Limits the maximum current available to the motor during the start phase. This mode of soft starting is used when it becomes necessary to limit the maximum starting current due to long start times or to protect the motor. This start mode allows you to set the maximum starting current as a percentage of locked rotor current and the duration of the current limit. Bypass contactors close after current limit time.

- Maximum current of 0 – 85% locked rotor current.
- Adjustable ramp time 0.5 – 180 seconds (can be extended with factory modification).

Kick Start

Selectable feature in both Voltage Ramp Start and Current Limit Start modes. Provides a current and torque "kick" for 0 to 2.0 seconds. This provides greater initial current to develop additional torque to breakaway a high friction load.

- 0 – 85% of locked rotor torque
- 0 – 2.0 seconds duration

Soft Stop

Allows for a controlled stopping of a load. Used when a stop-time that is greater than the coast-to-stop time is desired. Often used with high friction loads where a sudden stop may cause system or load damage.

- Stop time = 0 – 60 seconds.

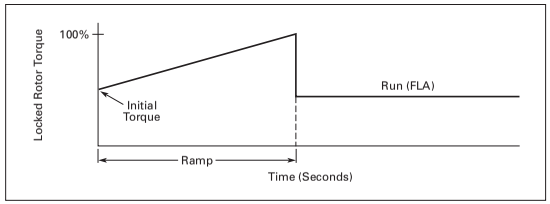

Figure 18-19. Starting Characteristics — Ramp Start

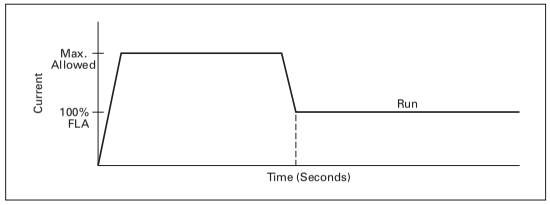

Figure 18-20. Starting Characteristics — Current Limit Start

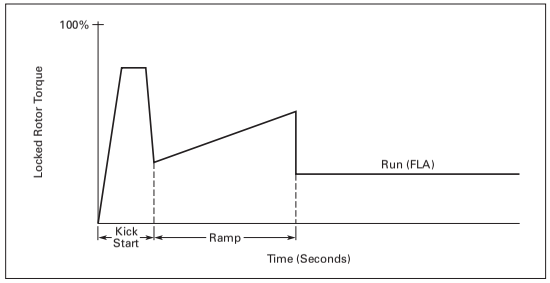

Figure 18-21. Starting Characteristics — Kick Start

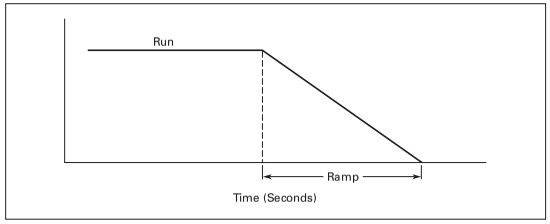

Figure 18-22. Starting Characteristics — Soft Stop

Sample Specification

MVX9000 Microdrives

Furnish as indicated Cutler-Hammer® Class ECS combination motor controllers manufactured by Eaton's electrical business or approved equal. All motor controllers shall be UL listed and conform to the latest Standards and the National Electric Code.

Table 18-64. MVX9000 Microdrives

Description	Catalog Number
Disconnect Switch	ECS81
Circuit Breaker (HMCPE/HMCP)	ECS82

General

- All motor controllers shall utilize IGBT technology with ratings up to 7-1/2 hp at 240V AC and 10 hp at 480V AC.
- Overload relays shall be inherent to the drive and allow for keypad selection of full load amperage settings.
- Control circuit transformers, where specified, shall be encapsulated. Primary and secondary fusing shall be provided. Unless otherwise specified, the secondary shall be 120V AC. 50 VA is minimum.
- Pilot devices, where specified, shall be oiltight and mounted in the door. Pilot lights shall be transformer type for longer lamp life. Pilot device legend plates shall be engraved aluminum.
- Keypad for drive control shall be mounted through the door. Option shall be available for an external enclosure for additional keypad protection. Option shall also be available for keypad mounted directly onto drive.

Enclosure

- Enclosures shall be Type 1, 3R, 4, 4X or 12, as scheduled.
- The operating mechanism shall be mounted through the door and shall have positive, non-teasing ON/OFF action.
- The operating handle shall have a means to lock the handle in the OFF position with a minimum of three standard padlocks having 1/4 inch diameter shackles.
- The enclosure sub-panel shall be easily removed without disturbing the operating mechanism.
- Enclosures shall have means for locking the cover.

Short Circuit Protective Device

Disconnect Switch

- Where specified, a disconnect switch with double break, rotary blades and quick make/quick break action shall be provided.
- A line shield with test probe holes for inspection shall be provided. The shield shall be removable.
- The switch shall have readily visible blades in the open (OFF) position.
- The fusible disconnect switch (through 100A) shall have built-in fuse pullers to make it easier to remove fuses.

Circuit Breaker

- Where specified, an adjustable instantaneous trip, magnetic only circuit breaker shall be provided.
- A manual push-to-trip button shall be provided to exercise the trip unit.

Short Circuit Rating

- Fusible disconnect switches shall be UL listed for 100,000 amperes available when Class R fuses are used.
- Combination starters with adjustable instantaneous trip, magnetic only circuit breakers shall be UL listed for 100,000 amperes available through 480V AC.

Technical Data

Output Ratings

- Horsepower;
  - 90V – 132V, 1/4 – 1 hp
  - 200 – 240V: 1/2 – 7-1/2 hp
  - 380 – 480V: 1 – 10 hp
- Frequency Range: 0.1 – 400 Hz
- Overload Rating: 150% for 60 seconds
- Frequency Resolution:
  - Digital: 0.1 Hz
  - Analog: Max. (Set Frequency/1000) Hz
- Frequency Accuracy
  - Digital: ± 0.01% of max. frequency
  - Analog: ± 0.2% of max. frequency
- Undervoltage Carryover Limit: 0.3 to 25 seconds

Motor Performance

- Motor Control: Sensorless Vector
- Constant and Variable Torque: Standard
- Speed Regulation: 0.5% of base speed

Input Power

- Voltage at 50/60 Hz ± 3 Hz
  - 100V – 120V, -10% +10% / 1-phase
  - 200V – 240V, -10% +5% / 1-phase
  - 200V – 240V, -10% +5% / 3-phase
  - 380V – 480V, -10% +10% / 3-phase
- Displacement Power Factor: Better than 0.95
- Efficiency: Typically greater than 95%

Design Type

- Microprocessor: 32-Bit
- Converter Type: Diode
- Inverter Type: Insulated Gate Bipolar Transistor
- Waveform: Sensorless Vector

Environment

- Operating Temperature:
  - -10°C to +50°C
  - -10°C to +40°C (above 7-1/2 hp)
- Humidity: 20 to 90% non-condensing
- Maximum Elevation: 1000 meters (3300 ft.)

Protective Features

- Ground Fault: Standard
- Overload Protection: Standard
- Overcurrent: Standard
- Overvoltage: Standard
- Undervoltage: Standard
- Overtemperature: Standard
- Overload Limit: Standard

Set Up Adjustments, Performance Features, Operator Control and External Interface

Keypad

- Alphanumeric Display: Standard, 1 x 4 character
- Digital Indications: Frequency (Hz), Motor Current (amps), User-Defined RUN/STOP, FORWARD/REVERSE and Parameters
- Diagnostics: Last 3 trips with cause
- LED Status Indicators: 8 (RUN/STOP, FORWARD/REVERSE, Hz, Amps, User Defined, and Input Speed)
- Operator Functions: START/STOP, Speed control (digital or potentiometer), RESET, SETUP Keys and ENTER.

I/O Terminal Block

- Analog Inputs:
  - 2 Inputs: 0 – 10V DC, 4 – 20 mA
  - Potentiometer: 1K ohm to 2K ohm
  - Analog Voltage: Nominal 10V DC (10K ohm input impedance)
  - Analog Current: Nominal 4 – 20 mA (250 ohm)
- Digital Inputs: 6 Programmable Inputs
- Digital Outputs: 1 Programmable Open collector and 1 Form C Relay contact
- Analog Monitor Output:
  - Analog meter – frequency or output current
- Dynamic Brake Chopper

Programmable Parameters

- Out of the Box: Factory settings loaded for quick start-up.
- Accel. and Decel.: 2 separately adjustable Linear or S Curve times: 0.1 – 3000 seconds
- Auto Restart: Overcurrent, overvoltage and undervoltage with 4 selectable retry restart modes
- DC Injection Braking
- External Fault: Terminal input
- Jog: Terminal input
- Fault Reset: STOP/RESET or terminal input
- I/O: NO/NC Selectable
- Jump Frequencies: 3 (with adjustable width)
- Parameter Security: Programmable software lock
- Preset Speeds: 7 preset speeds
- PID Controller: PID process control
- Reversing: Keypad or terminal
- Speed Setting: Keypad, terminal or pot
- START/STOP Control: Keypad or terminal
- Stop Modes: Decel, coast or DC injection

Reliability

- Pretested Components: Standard
- Surface Mount Technology: Standard (PCBs)
- Computerized Testing: Standard
- Final Test with Full Load: Standard
- Eaton's Cutler-Hammer Engineering Systems and Service: National network of AF drive specialists

Table 18-65. Watts Loss

Horsepower	Catalog Number	Volts	Watts Loss 9 kHz
1/4	**MVXF25A0-1**	115V AC	20W
1/2	**MVXF50A0-1**		20W
1	**MVX001A0-1**		38W
1/2	**MVXF50A0-2**	240V AC	20W
1	**MVX001A0-2**		38W
2	**MVX002A0-2**		75W
3	**MVX003A0-2**		110W
5	**MVX005A0-2**		185W
7-1/2	**MVX007A0-2**		275W
1	**MVX001A0-4**	480V AC	38W
2	**MVX002A0-4**		75W
3	**MVX003A0-4**		110W
5	**MVX005A0-4**		185W
7-1/2	**MVX007A0-4**		275W
10	**MVX010A0-4**		375W

Table 18-66. Dynamic Breaking Resistor Sizing

Dynamic Braking Resistors, Open Units		Catalog Number	Resistor (Min. Ohms)	Watts	Braking Torque	Duty Cycle
Horsepower	Volts					
1/4	115V Series	**K13-000034-0821**	100	80W	220%	10%
1/2		**K13-000034-0821**	100	80W	220%	10%
1		**K13-000034-0821**	80	80W	125%	10%
1/2	230V Series	**K13-000034-0821**	100	80W	220%	10%
1		**K13-000034-0821**	80	80W	125%	10%
2		**K13-000034-0824**	55	300W	125%	10%
3		**K13-000034-0824**	35	300W	125%	10%
5		**K13-000034-0825**	25	400W	125%	10%
7-1/2		**K13-000034-0826** ①	16	500W	125%	10%
1	460V Series	**K13-000034-0841**	260	80W	125%	10%
2		**K13-000034-0843**	190	300W	125%	10%
3		**K13-000034-0843**	145	300W	125%	10%
5		**K13-000034-0844**	95	400W	125%	10%
7-1/2		**K13-000034-0845** ①	60	500W	125%	10%
10		**K13-000034-0846** ②	45	700W	125%	10%

① Braking resister kit includes two resistors to be connected in parallel.
② Braking resister kit includes three resistors to be connected in parallel.

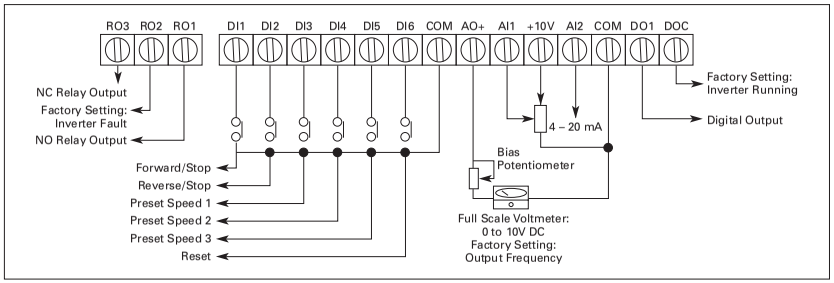

Figure 18-23. Control Terminal Wiring (Factory Settings)

Table 18-67. Specifications

Description	NEMA			Special Purpose			
	Size 4	Size 5	Size 6	160A	320A	540A	610A
	V201K4_	V201K5_	V201K6_	V201KR_	V201KT_	V201KV_	V201KZ_
Poles	3	3	3	3	3	3	3
Maximum Voltage Rating	600V	600V	600V	1500V	1500V	1500V	1500V
Ampere Rating	135A	270A	540A	160A	320A	540A	610A
Frequency, Hz	50/60	50/60	50/60	50/60	50/60	50/60	50/60
Maximum Closing Current	1600A	3000A	6000A	1600A	3000A	6000A	6000A
Maximum Interrupting Current	1600A	3000A	6000A	1600A	3000A	6000A	6000A
Short Time Current: 1 Second	2400A RMS	4500A RMS	9000A RMS	2400A RMS	4500A RMS	9000A RMS	9000A RMS
2 Second	1600A RMS	3000A RMS	6000A RMS	1600A RMS	3000A RMS	6000A RMS	6000A RMS
Dielectric Strength	2200V AC	5375V AC	5375V AC	2200V AC	5375V AC	5375V AC	5375V AC
Maximum Allowable Interrupting	1200/Hr.	—	—	1200/Hr.	—	—	—
Impulse Voltage (1 x 40 mS)	15 kV	15 kV	15 kV	15 kV	15 kV	15 kV	15 kV
Maximum Motor Horsepower at:							
200V	40 hp	75 hp	150 hp	50 hp	100 hp	150 hp	200 hp
230V	50 hp	100 hp	200 hp	60 hp	125 hp	200 hp	200 hp
380V	75 hp	150 hp	300 hp	100 hp	200 hp	300 hp	300 hp
460V	100 hp	200 hp	400 hp	125 hp	250 hp	400 hp	450 hp
575V	100 hp	200 hp	400 hp	150 hp	300 hp	400 hp	500 hp
800V	—	—	—	200 hp	400 hp	—	800 hp
1000V	—	—	—	250 hp	—	—	1000 hp
1500V	—	—	—	400 hp	800 hp	1300 hp	1600 hp
3-Phase Capacitive Switching (kVAR)							
230V	40 kVAR	80 kVAR	160 kVAR	50 kVAR	80 kVAR	160 kVAR	176 kVAR
460V	80 kVAR	160 kVAR	320 kVAR	100 kVAR	160 kVAR	320 kVAR	356 kVAR
600V	100 kVAR	200 kVAR	400 kVAR	125 kVAR	200 kVAR	400 kVAR	400 kVAR
1500V	—	—	—	205 kVAR	500 kVAR	—	1000 kVAR
Transformer Switching (kVA) ①							
Single-Phase, 2-Pole:							
120V	6.8 kVA	14 kVA	27 kVA	8 kVA	14 kVA	27 kVA	27 kVA
240V	14 kVA	27 kVA	54 kVA	16 kVA	27 kVA	54 kVA	54 kVA
480V	27 kVA	54 kVA	108 kVA	32 kVA	54 kVA	108 kVA	108 kVA
600V	34 kVA	68 kVA	135 kVA	40 kVA	68 kVA	135 kVA	135 kVA
Three-Phase, 3-Pole:							
240V	23 kVA	47 kVA	94 kVA	27 kVA	47 kVA	94 kVA	94 kVA
480V	47 kVA	94 kVA	188 kVA	55 kVA	94 kVA	188 kVA	188 kVA
600V	59 kVA	117 kVA	234 kVA	70 kVA	117 kVA	234 kVA	234 kVA

① For transformers having inrush currents of not more than 20 times the rated full load current.

Table 18-68. Electrical Characteristics — Apply to Both NEMA and Special Purpose Types

Description	Size		
	4 (160A)	5 (320A)	6 (540A and 610A)
DC Coil Data — Burden: (AC Supply Rectified)			
Open VA	300 VA	500 VA	1450 VA
Closed VA	30 VA	25 VA	32 VA
Closed Watts	6W	20W	30W
Pick-Up Volts	70% of Rated Coil Volts		
Drop-Out Volts	50% of Rated Coil Volts		
Pick-Up Time in Hz	1.5 – 2 Hz		
Drop-Out Time in Hz	6 – 6.15 Hz		
Max. Voltage Rating	600V	600V	600V
Max. Closing Current	1600A	3000A	6000A
Max. Interrupting Current	1600A	3000A	6000A
Short Time Current:			
1 Second	2400A RMS	4500A RMS	9000A RMS
2 Second	1600A RMS	3000A RMS	6000A RMS

Table 18-69. Electrical Characteristics Coil Data (AC Supply Rectified)

Burden	Size 4 (160A)	Size 5 (320A)	Size 6 (540A and 610A)
Inrush VA	300	600	1700
Sealed VA	30	20	28
Sealed Watts	6	20	28
Pick-Up Volts	70% of Rated Coil Volts		
Drop-Out Volts	50% of Rated Coil Volts		
Pick-Up Time in Hz	1.5 – 2	1.5 – 2	1.5 – 2
Drop-Out Time in Hz	6 – 7.5	6 – 6.15	6 – 6.15

Control Power Transformer Selection Procedure

The following steps will assure that the secondary voltage delivered by your transformer will be either 85%, 90% or 95% of the nameplate secondary voltage under maximum inrush conditions, at rated input voltage. A typical selection example based on these steps follows.

Step 1

Calculate the total SEALED (steady state) VA load of your control circuit. This is done by adding the continuous VA requirements of the maximum number of components that will be energized at any given time, including non-inductive as well as inductive components. For Sealed VA data see **Page 18-49**.

Step 2

Calculate the PEAK INRUSH VA of your control circuit. First, analyze the sequence of operation of all components. Then add together the inrush VA ratings of the components that will be energized simultaneously. Next, determine the peak — or maximum simultaneous — inrush VA load that the transformer will "see." The VA requirements for indicating lights, timers and other non-inductive components which do not have an inrush VA also should be included since they will present a load to the transformer at the time of maximum inrush.

Step 3

Calculate the TRANSFORMER SELECTION INRUSH VA. Use the following formula:

$$\text{Selection Inrush} = \sqrt{(\text{VA Sealed})^2 + (\text{VA Inrush})^2}$$

Note: Transformer Selection Inrush VA also can be determined by adding the inrush VA and sealed VA arithmetically, but this usually results in an oversized transformer.

Step 4

Determine the correct transformer NAMEPLATE VA RATING. Refer to the Inrush/Regulation Data table: If the line supply to the transformer is fairly stable (does not vary more than 5%), use the 90% secondary voltage column — the 90% column is most commonly used. If the line supply voltage varies up to 10%, use the 95% voltage regulation column. To determine the correct VA transformer rating, go down the column until you arrive at the inrush VA rating closest to, but not less than, the Transformer Selection Inrush VA calculated in Step 3. The left hand column of the table will give the corresponding transformer NAMEPLATE VA RATING.

Table 18-70. Inrush/Regulation Data

Transformer VA Rating 55°C	Inrush VA — 40% Power Factor		
	At 95% Secondary Voltage	At 90% Secondary Voltage	At 85% Secondary Voltage
60	137	185	227
95	242	329	409
105	294	407	512
180	592	842	1071
225	929	1312	1663
275	1271	1801	2288
320	1581	2224	2816
380	2124	3048	3895
550	3196	4604	5896
850	5500	7914	10141
1100	8382	12067	15477
1500	11100	16066	21032
2000	21820	24356	41100
3000	29123	32770	59997
5000	74595	111000	145000
7500	104000	162000	219000
10000	111000	166000	237000

Note: When evaluating supply-line stability, remember that supply-line voltage drop frequently is associated with motor-starting inrush current. When motors and motor controls are connected to a common feeder, the controls will experience a momentary voltage dip when the motor starts. This reduces the control transformer voltage supplied to the motor starting contactor and may cause the contactor to chatter or drop out.

Selection Example

Steps 1 and 2

By following Steps 1 and 2 described in column one at left, analysis of the control circuits shows the following sealed VA and inrush VA data:

Table 18-71. Example Data

Qty.	Description	Sealed VA	Inrush VA
3	3-Pole Size 1 Contactors	60	309
2	3-Pole Size 3 Contactors	99	780
4	Relays	88	620
2	Electronic Timers	36	36
4	Indicating Lights	28	28
Totals		311	1773

Step 3

Following Step 3 in column one at left, the Transformer Selection Inrush VA is calculated at 1773 VA.

Transformer Selection VA

$$= \sqrt{(\text{VA Sealed})^2 + (\text{VA Inrush})^2}$$

$$= \sqrt{(311)^2 + (1773)^2}$$

$$= \sqrt{3{,}240{,}250}$$

$$= 1800$$

Steps 4 and 5

Following Steps 3 and 4 at left, the Inrush/Regulation Data Chart is then consulted to find the correction nameplate VA size of the transformer. Under the 90% Secondary Voltage column, we find that a 320 VA transformer will deliver 2224 VA, amply covering circuit demands of 1800 Inrush VA. Checking this selection against the requirements of 311 VA sealed, we confirm that a 320 VA transformer will be sufficient.

Control Power Transformer Kit

Table 18-72. Component VA Table

	Inrush			Sealed		
	VAR	Watts	VA	VAR	Watts	VA
Relays						
Type AA (1 – 2 Pole)	18	8.5	20	8	6.6	11
Type D15	64	49	80	7.1	2.4	7.5
Type M (2 – 12 Pole)	122	95	155	20	9	22
Type M Latch Coil	36.5	18.5	41	13	11	17
Type MRD	—	168	—	—	13.2	13.2
Type MRD Latch Coil ①	—	21.6	—	—	21.6	—
Type R	—	6	6	—	6	6
Type RM — Set	—	—	—	—	3.5	3.5
— Release	—	—	—	—	3.1	3.1
Type TF	3	3	4	3	3	4
Type TH	4	4	5	4	4	5
Timers						
Type D80	60	67	90	18	6	19
Type D80 with Inst. Contacts	89	95	130	20	7	21
Freedom Series Starters and Contactors						
IEC						
Frames A – C	64	49	80	7.1	2.4	7.5
Frames D – F	78	65	100	9.2	3.1	10
Frames G – K	210	95	230	27	7.8	28
Frames L – N	374	112	390	48	13	49.8
Frames P – S	1132	216	1040	96	17	116
Frames T – U	—	798	950	—	10	11
Frame V	—	1345	1600	—	22	25
Frames W – X	—	—	1000	—	—	23
Frame Z	—	—	2400	—	—	70
NEMA						
Size 00	64	49	80	7.1	2.4	7.5
Size 0	78	65	100	9.2	3.1	10
Sizes 1 – 2	210	95	230	27	7.8	28
Size 3	374	112	390	48	13	49.8
Sizes 4 – 5	1132	240	1158	96	27.2	100
Sizes 6 – 7	868	1345	1600	11	22	25
Size 8	—	2060	2450	—	60	75
Advantage Contactors and Starters						
NEMA						
Size IL, 1 and 2	—	—	250	—	5	25
Sizes 3 and 4	—	—	500	—	10	50
Sizes 5 and 6	—	—	2600	—	10	50

① Intermittent duty coil.

Ampere ratings of motors vary somewhat, depending upon the type of motor. The values given below are for drip-proof, Class B insulated (T Frame) where available, 1.15 service factor, NEMA Design B motors. These values represent an average full load motor current which was calculated from the motor performance data published by several motor manufacturers. In the case of high torque squirrel cage motors, the ampere ratings will be at least 10% greater than the values given below.

Caution — These average ratings could be high or low for a specific motor and therefore heater coil selection on this basis always involves risk. For fully reliable motor protection, select heater coils on the basis of full load current rating as shown on the motor nameplate.

Table 18-73. Ampere Ratings of Three-Phase, 60 Hz, AC Induction Motor

hp ①	Syn. Speed RPM	Current in Amperes					
		200V	230V	380V ②	460V	575V	2200V
1/4	1800	1.09	.95	.55	.48	.38	—
	1200	1.61	1.40	.81	.70	.56	—
	900	1.84	1.60	.93	.80	.64	—
1/3	1800	1.37	1.19	.69	.60	.48	—
	1200	1.83	1.59	.92	.80	.64	—
	900	2.07	1.80	1.04	.90	.72	—
1/2	1800	1.98	1.72	.99	.86	.69	—
	1200	2.47	2.15	1.24	1.08	.86	—
	900	2.74	2.38	1.38	1.19	.95	—
3/4	1800	2.83	2.46	1.42	1.23	.98	—
	1200	3.36	2.92	1.69	1.46	1.17	—
	900	3.75	3.26	1.88	1.63	1.30	—
1	3600	3.22	2.80	1.70	1.40	1.12	—
	1800	4.09	3.56	2.06	1.78	1.42	—
	1200	4.32	3.76	2.28	1.88	1.50	—
	900	4.95	4.30	2.60	2.15	1.72	—
1-1/2	3600	5.01	4.36	2.64	2.18	1.74	—
	1800	5.59	4.86	2.94	2.43	1.94	—
	1200	6.07	5.28	3.20	2.64	2.11	—
	900	6.44	5.60	3.39	2.80	2.24	—
2	3600	6.44	5.60	3.39	2.80	2.24	—
	1800	7.36	6.40	3.87	3.20	2.56	—
	1200	7.87	6.84	4.14	3.42	2.74	—
	900	9.09	7.90	4.77	3.95	3.16	—
3	3600	9.59	8.34	5.02	4.17	3.34	—
	1800	10.8	9.40	5.70	4.70	3.76	—
	1200	11.7	10.2	6.20	5.12	4.10	—
	900	13.1	11.4	6.90	5.70	4.55	—
5	3600	15.5	13.5	8.20	6.76	5.41	—
	1800	16.6	14.4	8.74	7.21	5.78	—
	1200	18.2	15.8	9.59	7.91	6.32	—
	900	18.3	15.9	9.60	7.92	6.33	—
7-1/2	3600	22.4	19.5	11.8	9.79	7.81	—
	1800	24.7	21.5	13.0	10.7	8.55	—
	1200	25.1	21.8	13.2	10.9	8.70	—
	900	26.5	23.0	13.9	11.5	9.19	—
10	3600	29.2	25.4	15.4	12.7	10.1	—
	1800	30.8	26.8	16.3	13.4	10.7	—
	1200	32.2	28.0	16.9	14.0	11.2	—
	900	35.1	30.5	18.5	15.2	12.2	—
15	3600	41.9	36.4	22.0	18.2	14.5	—
	1800	45.1	39.2	23.7	19.6	15.7	—
	1200	47.6	41.4	25.0	20.7	16.5	—
	900	51.2	44.5	26.9	22.2	17.8	—
20	3600	58.0	50.4	30.5	25.2	20.1	—
	1800	58.9	51.2	31.0	25.6	20.5	—
	1200	60.7	52.8	31.9	26.4	21.1	—
	900	63.1	54.9	33.2	27.4	21.9	—

Table 18-73. Ampere Ratings of Three-Phase, 60 Hz, AC Induction Motor (Continued)

hp ①	Syn. Speed RPM	Current in Amperes					
		200V	230V	380V ②	460V	575V	2200V
25	3600	69.9	60.8	36.8	30.4	24.3	—
	1800	74.5	64.8	39.2	32.4	25.9	—
	1200	75.4	65.6	39.6	32.8	26.2	—
	900	77.4	67.3	40.7	33.7	27.0	—
30	3600	84.8	73.7	44.4	36.8	29.4	—
	1800	86.9	75.6	45.7	37.8	30.2	—
	1200	90.6	78.8	47.6	39.4	31.5	—
	900	94.1	81.8	49.5	40.9	32.7	—
40	3600	111	96.4	58.2	48.2	38.5	—
	1800	116	101	61.0	50.4	40.3	—
	1200	117	102	61.2	50.6	40.4	—
	900	121	105	63.2	52.2	41.7	—
50	3600	138	120	72.9	60.1	48.2	—
	1800	143	124	75.2	62.2	49.7	—
	1200	145	126	76.2	63.0	50.4	—
	900	150	130	78.5	65.0	52.0	—
60	3600	164	143	86.8	71.7	57.3	—
	1800	171	140	90.0	74.5	59.4	—
	1200	173	150	91.0	75.0	60.0	—
	900	177	154	93.1	77.0	61.5	—
75	3600	206	179	108	89.6	71.7	—
	1800	210	183	111	91.6	73.2	—
	1200	212	184	112	92.0	73.5	—
	900	222	193	117	96.5	77.5	—
100	3600	266	231	140	115	92.2	—
	1800	271	236	144	118	94.8	23.6
	1200	275	239	145	120	95.6	24.2
	900	290	252	153	126	101	24.8
125	3600	—	292	176	146	116	—
	1800	—	293	177	147	117	29.2
	1200	—	298	180	149	119	29.9
	900	—	305	186	153	122	30.9
150	3600	—	343	208	171	137	—
	1800	—	348	210	174	139	34.8
	1200	—	350	210	174	139	35.5
	900	—	365	211	183	146	37.0
200	3600	—	452	257	226	181	—
	1800	—	458	265	229	184	46.7
	1200	—	460	266	230	184	47.0
	900	—	482	279	241	193	49.4
250	3600	—	559	338	279	223	—
	1800	—	568	343	284	227	57.5
	1200	—	573	345	287	229	58.5
	900	—	600	347	300	240	60.5
300	1800	—	678	392	339	271	69.0
	1200	—	684	395	342	274	70.0
400	1800	—	896	518	448	358	91.8
500	1800	—	1110	642	555	444	116

① To convert horsepower to kW, multiply horsepower by .7457.
② 380V 50 Hz.

Table 18-74. Product Codes — By Description

Description	Code
Accessories, Advantage	AF63
Accessories, Fuse Clips and Cover Control	AF40
Accessories, *IT.* EM IEC	AF68
Accessories, *IT.* EM IEC Enclosed Control	AF68
Accessories, *IT.* EM NEMA Enclosed Control	AF67
C361 Flange Mounted Switch	AN20
C371 Circuit Breaker Operator	AN50
Combination Enclosed Starters, Specials	AM60
Combination Full Voltage Advantage Starter	AE63
Combination Full Voltage IEC Freedom Starter	AE62
Combination Full Voltage IEC *IT.* EM Starters	AE68
Combination Full Voltage NEMA Freedom Starter	AE61
Combination Full Voltage NEMA *IT.* EM Starters	AE67
Combination Full Voltage Type 4X & 7/9 NEMA Starter	AE65
Combination Full Voltage Vacuum Starter	AE64
Combination NEMA HVAC	EH61
Combination Reduced Voltage *IT.* Soft Starters	NS22
Duplex Pump Panels, Advantage	AJ66
Duplex Pump Panels, Freedom	AJ65
Ghisalba Coils and Feeder Groups	HD70A1
Lighting, Electrically Held Enclosed A202 Contactor	AB76
Lighting, Electrically Held Enclosed CN35 Contactor	AB66
Lighting, Magnetically Latched Enclosed A202 Contactor	AB72
Lighting, Mechanically Held Enclosed A202 Contactor	AB67
Lighting, Mechanically Held Enclosed C30 Contactor	AB79
Manual Starters Type B100	2916
Manual Starters Type MS	2915
Multispeed Combination, Advantage	AI67
Multispeed Combination, IEC Freedom	AI66
Multispeed Combination, NEMA Freedom	AI65
Multispeed Non-combination, Freedom IEC	AI62
Multispeed, Advantage	AI63
Multispeed, IEC *IT.* EM	AI68
Multispeed, NEMA Freedom	AI61
Multispeed, NEMA *IT.* EM	AI69
Multispeed, Vacuum	AI64
Non-combination Enclosed Starters, Specials	AM50
Non-combination Full Voltage Advantage Contactor	AB63
Non-combination Full Voltage Advantage Starter	AA63
Non-combination Full Voltage IEC Freedom Contactor	AB62
Non-combination Full Voltage IEC Freedom Fixed OL Starter	AA31
Non-combination Full Voltage IEC Freedom Starter	AA62
Non-combination Full Voltage IEC *IT.* EM Contactors	AC68
Non-combination Full Voltage IEC *IT.* EM Starters	AA68
Non-combination Full Voltage NEMA Freedom Contactor	AB61
Non-combination Full Voltage NEMA Freedom Starter	AA61
Non-combination Full Voltage NEMA *IT.* EM Contactors	AC67
Non-combination Full Voltage NEMA *IT.* EM Starters	AA67
Non-combination Full Voltage Type 4X Starter	AA65
Non-combination Full Voltage Type 7/9 Explosion Proof Starter	AA66
Non-combination Full Voltage Type 7/9 NEMA Starter	AE66
Non-combination Full Voltage Vacuum Contactor	AB64
Non-combination Full Voltage Vacuum Starter	AA64
Non-combination MVX Drives	AA80
Non-combination Reduced Voltage *IT.* Soft Starter	NS12

Table 18-74. Product Codes — By Description (Continued)

Description	Code
Oil Pump Panel, NEMA Freedom	AJ71
Pump Panel, Advantage	AJ63
Pump Panel, IEC Freedom	AJ62
Pump Panel, NEMA Freedom	AJ61
Pump Panel, Vacuum	AJ64
Pump Panels, *IT.* EM	AJ67
Reduced Voltage IEC Starter	AG62
Reduced Voltage NEMA Starter	AG61
Reduced Voltage Vacuum Starter	AG64
Reduced Voltage, IEC *IT.*	AG68
Renewal Parts for Enclosed Control, C361, C371, C400	HD70H4

Table 18-75. Product Codes — By Code

Code	Description
AA31	Non-combination Full Voltage IEC Freedom Fixed OL Starter
AA61	Non-combination Full Voltage NEMA Freedom Starter
AA62	Non-combination Full Voltage IEC Freedom Starter
AA63	Non-combination Full Voltage Advantage Starter
AA64	Non-combination Full Voltage Vacuum Starter
AA65	Non-combination Full Voltage Type 4X Starter
AA66	Non-combination Full Voltage Type 7/9 Explosion Proof Starter
AA67	Non-combination Full Voltage NEMA *IT.* EM Starters
AA68	Non-combination Full Voltage IEC *IT.* EM Starters
AA80	Non-combination MVX Drives
AB61	Non-combination Full Voltage NEMA Freedom Contactor
AB62	Non-combination Full Voltage IEC Freedom Contactor
AB63	Non-combination Full Voltage Advantage Contactor
AB64	Non-combination Full Voltage Vacuum Contactor
AB66	Lighting, Electrically Held Enclosed CN35 Contactor
AB67	Lighting, Mechanically Held Enclosed A202 Contactor
AB72	Lighting, Magnetically Latched Enclosed A202 Contactor
AB76	Lighting, Electrically Held Enclosed A202 Contactor
AB79	Lighting, Mechanically Held Enclosed C30 Contactor
AC67	Non-combination Full Voltage NEMA *IT.* EM Contactors
AC68	Non-combination Full Voltage IEC *IT.* EM Contactors
AE61	Combination Full Voltage NEMA Freedom Starter
AE62	Combination Full Voltage IEC Freedom Starter
AE63	Combination Full Voltage Advantage Starter
AE64	Combination Full Voltage Vacuum Starter
AE65	Combination Full Voltage Type 4X & 7/9 NEMA Starter
AE66	Non-combination Full Voltage Type 7/9 NEMA Starter
AE67	Combination Full Voltage NEMA *IT.* EM Starters
AE68	Combination Full Voltage IEC *IT.* EM Starters
AF40	Accessories, Fuse Clips and Cover Control
AF63	Accessories, Advantage
AF67	Accessories, *IT.* EM NEMA Enclosed Control
AF68	Accessories, *IT.* EM IEC Enclosed Control
AF68	Accessories, *IT.* EM IEC
AG61	Reduced Voltage NEMA Starter
AG62	Reduced Voltage IEC Starter
AG64	Reduced Voltage Vacuum Starter
AG68	Reduced Voltage, IEC *IT.*
AI61	Multispeed, NEMA Freedom
AI62	Multispeed Non-combination, Freedom IEC

Table 18-75. Product Codes — By Code (Continued)

Code	Description
AI63	Multispeed, Advantage
AI64	Multispeed, Vacuum
AI65	Multispeed Combination, NEMA Freedom
AI66	Multispeed Combination, IEC Freedom
AI67	Multispeed Combination, Advantage
AI68	Multispeed, IEC *IT.* EM
AI69	Multispeed, NEMA *IT.* EM
AJ61	Pump Panel, NEMA Freedom
AJ62	Pump Panel, IEC Freedom
AJ63	Pump Panel, Advantage
AJ64	Pump Panel, Vacuum
AJ65	Duplex Pump Panels, Freedom
AJ66	Duplex Pump Panels, Advantage
AJ67	Pump Panels, *IT.* EM
AJ71	Oil Pump Panel, NEMA Freedom
AM50	Non-combination Enclosed Starters, Specials
AM60	Combination Enclosed Starters, Specials
AN20	C361 Flange Mounted Switch
AN50	C371 Circuit Breaker Operator
EH61	Combination NEMA HVAC
HD70A1	Ghisalba Coils and Feeder Groups
HD70H4	Renewal Parts for Enclosed Control, C361, C371, C400
NS12	Non-combination Reduced Voltage *IT.* Soft Starter
NS22	Combination Reduced Voltage *IT.* Soft Starters
2915	Manual Starters Type MS
2916	Manual Starters Type B100

Eaton Electrical Terms & Conditions

Contents

Description	*Page*
Terms and Conditions of Sale	19-2
Terms of Payment	19-2
Freight	19-3
Warranty	19-3

Selling Policy (Supersedes Selling Policy 25-000, dated May 16, 2005)

Terms and Conditions of Sale

The Terms and Conditions of Sale set forth herein, and any supplements which may be attached hereto, constitute the full and final expression of the contract for the sale of products or services (hereinafter referred to as Product(s) or Services by Eaton Electrical Inc. (hereinafter referred to as Seller) to the Buyer, and supersedes all prior quotations, purchase orders, correspondence or communications whether written or oral between the Seller and the Buyer. Notwithstanding any contrary language in the Buyer's purchase order, correspondence or other form of acknowledgment, Buyer shall be bound by these Terms and Conditions of Sale when it sends a purchase order or otherwise indicates acceptance of this contract, or when it accepts delivery from Seller of the Products or Services. THE CONTRACT FOR SALE OF THE PRODUCTS OR SERVICES IS EXPRESSLY LIMITED TO THE TERMS AND CONDITIONS OF SALE STATED HEREIN. ANY ADDITIONAL OR DIFFERENT TERMS PROPOSED BY BUYER ARE REJECTED UNLESS EXPRESSLY AGREED TO IN WRITING BY SELLER. No contract shall exist except as herein provided.

Complete Agreement

No amendment or modification hereto nor any statement, representation or warranty not contained herein shall be binding on the Seller unless made in writing by an authorized representative of the Seller. Prior dealings, usage of the trade or a course of performance shall not be relevant to determine the meaning of this contract even though the accepting or acquiescing party had knowledge of the nature of the performance and opportunity for objection.

Quotations

Written quotations are valid for 30 days from its date unless otherwise stated in the quotation or terminated sooner by notice.

Verbal quotations, unless accepted, expire the same day they are made.

A complete signed order must be received by Seller within 20 calendar days of notification of award, otherwise the price and shipment will be subject to re-negotiation.

Termination and Cancellation

Any order may be terminated by the Buyer only by written notice and upon payment of reasonable termination charges, including all costs plus profit.

Seller shall have the right to cancel any order at any time by written notice if Buyer breaches any of the terms hereof, becomes the subject of any proceeding under state or federal law for the relief of debtors, or otherwise becomes insolvent or bankrupt, generally does not pay its debts as they become due or makes an assignment for the benefit of creditors.

Prices

All prices are subject to change without notice. In the event of a price change, the effective date of the change will be the date of the new price or discount sheet, letter or telegram. All quotations made or orders accepted after the effective date will be on the new basis. For existing orders, the price of the unshipped portion of an order will be the price in effect at time of shipment.

Price Policy – Products and Services

When prices are quoted as firm for quoted shipment, they are firm provided the following conditions are met:

1. The order is released with complete engineering details.
2. Shipment of Products are made, and Services purchased are provided within the quoted lead time.
3. When drawings for approval are required for any Products, the drawings applicable to those Products must be returned within 30* calendar days from the date of the original mailing of the drawings by Seller. The return drawings must be released for manufacture and shipment and must be marked "APPROVED" or "APPROVED AS NOTED". Drawing re-submittals which are required for any other reason than to correct Seller errors will not extend the 30-day period.

* 60 days for orders through contractors to allow time for their review and approval before and after transmitting them to their customers.

If the Buyer initiates or in any way causes delays in shipment, provision of Services or return of approval drawings beyond the periods stated above, the price of the Products or Services will be increased 1% per month or fraction thereof up to a maximum of 18 months from the date of the Buyer's order. For delays resulting in shipment or provision of Services beyond 18 months from the date of the Buyer's order, the price must be renegotiated.

Price Policy – BLS

Refer to Price Policy 25-050.

Minimum Billing

Orders less than $1,000 will be assessed a shipping and handling charge of 5% of the price of the order, with a minimum charge of $25.00 unless noted differently on Product discount sheets.

Taxes

The price does not include any taxes. Buyer shall be responsible for the payment of all taxes applicable to, or arising from the transaction, the Products, its sale, value, or use, or any Services performed in connection therewith regardless of the person or entity actually taxed.

Terms of Payment

Products

Acceptance of all orders is subject to the Buyer meeting Seller's credit requirements. Terms of payment are subject to change for failure to meet such requirements. Seller reserves the right at any time to demand full or partial payment before proceeding with a contract of sale as a result of changes in the financial condition of the Buyer. Terms of Payment are either Net 30 days from the date of invoice of each shipment or carry a cash discount based on Product type. Specific payment terms for Products are outlined in the applicable Product discount schedules.

Services

Terms of payment are net within 30 days from date of invoice for orders amounting to less than $50,000.00.

Terms of payment for orders exceeding $50,000.00 shall be made according to the following:

1. Twenty percent (20%) of order value with the purchase order payable 30 days from date of invoice.
2. Eighty percent (80%) of order value in equal monthly payments over the performance period payable 30 days from date of invoice.

Except for work performed (i) under a firm fixed price basis or (ii) pursuant to terms of a previously priced existing contract between Seller and Buyer, invoices for work performed by Seller shall have added and noted on each invoice a charge of 3% (over and above the price of the work) which is related to Seller compliance with present and proposed environmental, health, and safety regulations associated with prescribed requirements covering hazardous materials management and employee training, communications, personal protective equipment, documentation and record keeping associated therewith.

Adequate Assurances

If, in the judgment of Seller, the financial condition of the Buyer, at any time during the period of the contract, does not justify the terms of payment specified, Seller may require full or partial payment in advance.

Delayed Payment

If payments are not made in accordance with these terms, a service charge will, without prejudice to the right of Seller to immediate payment, be added in an amount equal to the lower of 1.5% per month or fraction thereof or the highest legal rate on the unpaid balance.

Freight

Freight policy will be listed on the Product discount sheets, or at option of Seller one of the following freight terms will be quoted.

F.O.B. – P/S – Frt./Ppd. and Invoiced

Products are sold F.O.B. point of shipment freight prepaid and invoiced to the Buyer.

F.O.B. – P/S – Frt./Ppd. and Allowed

Products sold are delivered F.O.B. point of shipment, freight prepaid and included in the price.

F.O.B. Destination – Frt./Ppd. and Allowed

At Buyer's option, Seller will deliver the Products F.O.B. destination freight prepaid and 2% will be added to the net price.

The term "freight prepaid" means that freight charges will be prepaid to the accessible common carrier delivery point nearest the destination for shipments within the United States and Puerto Rico unless noted differently on the Product discount sheets. For any other destination contact Seller's representative.

Shipment and Routing

Seller shall select the point of origin of shipment, the method of transportation, the type of carrier equipment and the routing of the shipment.

If the Buyer specifies a special method of transportation, type of carrier equipment, routing, or delivery requirement, Buyer shall pay all special freight and handling charges.

When freight is included in the price, no allowance will be made in lieu of transportation if the Buyer accepts shipment at factory, warehouse, or freight station or otherwise supplies its own transportation.

Risk of Loss

Risk of loss or damage to the Products shall pass to Buyer at the F.O.B. point.

Concealed Damage

Except in the event of F.O.B. destination shipments, Seller will not participate in any settlement of claims for concealed damage.

When shipment has been made on an F.O.B. destination basis, the Buyer must unpack immediately and, if damage is discovered must:

1. Not move the Products from the point of examination.
2. Retain shipping container and packing material.
3. Notify the carrier in writing of any apparent damage.
4. Notify Seller representative within 72 hours of delivery.
5. Send Seller a copy of the carrier's inspection report.

Witness Tests/Customer Inspection

Standard factory tests may be witnessed by the Buyer at Seller's factory for an additional charge calculated at the rate of $2,500 per day (not to exceed eight (8) hours) per Product type. Buyer may final inspect Products at the Seller's factory for $500 per day per Product type.

Witness tests will add one (1) week to the scheduled shipping date. Seller will notify Buyer fourteen (14) calendar days prior to scheduled witness testing or inspection. In the event Buyer is unable to attend, the Parties shall mutually agree on a rescheduled date. However, Seller reserves the right to deem the witness tests waived with the right to ship and invoice Products.

Held Orders

For any order held, delayed or rescheduled at the request of the Buyer, Seller may, at its sole option (1) require payment to be based on any reasonable basis, including but not limited to the contract price, and any additional expenses, or cost resulting from such a delay; (2) store Products at the sole cost and risk of loss of the Buyer; and/or (3) charge to the Buyer those prices under the applicable price policy. Payment for such price, expenses and costs, in any such event, shall be due by Buyer within thirty (30) days from date of Seller's invoice therefore." Any order so held delayed or rescheduled beyond six (6) months will be treated as a Buyer termination.

Drawing Approval

Seller will design the Products in line with, in Seller's judgment, good commercial practice. If at drawing approval Buyer makes changes outside of the design as covered in their specifications, Seller will then be paid reasonable charges and allowed a commensurate delay in shipping date based on the changes made.

Drawing Re-Submittal

When Seller agrees to do so in its quotation, Seller shall provide Buyer with the first set of factory customer approval drawing(s) at Seller's expense. The customer approval drawing(s) will be delivered at the quoted delivery date. If Buyer requests drawing changes or additions after the initial factory customer approval drawing(s) have been submitted by Seller, the Seller, at its option, may assess Buyer drawing charges. Factory customer approval drawing changes required due to misinterpretation by Seller will be at Seller's expense. Approval drawings generated by Bid Manager are excluded from this provision.

Warranty

Warranty for Products

Seller warrants that the Products manufactured by it will conform to Seller's applicable specifications and be free from failure due to defects in workmanship and material for one (1) year from the date of installation of the Product or eighteen (18) months from the date of shipment of the Product, whichever occurs first.

In the event any Product fails to comply with the foregoing warranty Seller will, at its option, either (a) repair or replace the defective Product, or defective part or component thereof, F.O.B. Seller's facility freight prepaid, or (b) credit Buyer for the purchase price of the Product. All warranty claims shall be made in writing.

Seller requires all non-conforming Products be returned at Seller's expense for evaluation unless specifically stated otherwise in writing by Seller.

This warranty does not cover failure or damage due to storage, installation, operation or maintenance not in conformance with Seller's recommendations and industry standard practice or due to accident, misuse, abuse or negligence. This warranty does not cover reimbursement for labor, gaining access, removal, installation, temporary power or any other expenses, which may be incurred in connection with repair or replacement.

This warranty does not apply to equipment not manufactured by Seller. Seller limits itself to extending the same warranty it receives from the supplier.

Extended Warranty for Products

If requested by the Buyer and specifically accepted in writing by Seller, the foregoing standard warranty for Products will be extended from the date of shipment for the period and price indicated below:

- 24 months – 2% of Contract Price
- 30 months – 3% of Contract Price
- 36 months – 4% of Contract Price

Special Warranty (In and Out) for Products

If requested by the Buyer and specifically accepted in writing by Seller, Seller will, during the warranty period for Products, at an additional cost of 2% of the contract price, be responsible for the direct cost of:

1. Removing the Product from the installed location.
2. Transportation to the repair facility and return to the site.
3. Reinstallation on site.

The total liability of Seller for this Special Warranty for Products is limited to 50% of the contract price of the particular Product being repaired and excludes expenses for removing adjacent apparatus, walls, piping, structures, temporary service, etc.

Warranty for Services

Seller warrants that the Services performed by it hereunder will be performed in accordance with generally accepted professional standards.

The Services, which do not so conform, shall be corrected by Seller upon notification in writing by the Buyer within one (1) year after completion of the Services.

Unless otherwise agreed to in writing by Seller, Seller assumes no responsibility with respect to the suitability of the Buyer's, or its customer's, equipment or with respect to any latent defects in equipment not supplied by Seller. This warranty does not cover damage to Buyer's, or its customer's, equipment, components or parts resulting in whole or in part from improper maintenance or operation or from their deteriorated condition. Buyer will, at its cost, provide Seller with unobstructed access to the defective Services, as well as adequate free working space in the immediate vicinity of the defective Services and such facilities and systems, including, without limitation, docks, cranes and utility disconnects and connects, as may be necessary in order that Seller may perform its warranty obligations. The conducting of any tests shall be mutually agreed upon and Seller shall be notified of, and may be present at, all tests that may be made.

Warranty for Power Systems Studies

Seller warrants that any power systems studies performed by it will conform to generally accepted professional standards. Any portion of the study, which does not so conform, shall be corrected by Seller upon notification in writing by the Buyer within six (6) months after completion of the study. All warranty work shall be performed in a single shift straight time basis Monday through Friday. In the event that the study requires correction of warranty items on an overtime schedule, the premium portion of such overtime shall be for the Buyer's account.

Limitation on Warranties for Products, Services and Power Systems Studies

THE FOREGOING WARRANTIES ARE EXCLUSIVE EXCEPT FOR WARRANTY OF TITLE. SELLER DISCLAIMS ALL OTHER WARRANTIES INCLUDING ANY IMPLIED WARRANTIES OF MERCHANTABILITY AND FITNESS FOR A PARTICULAR PURPOSE.

CORRECTION OF NON-CONFORMITIES IN THE MANNER AND FOR THE PERIOD OF TIME PROVIDED ABOVE SHALL CONSTITUTE SELLER'S SOLE LIABILITY AND BUYER'S EXCLUSIVE REMEDY FOR FAILURE OF SELLER TO MEET ITS WARRANTY OBLIGATIONS, WHETHER CLAIMS OF THE BUYER ARE BASED IN CONTRACT, IN TORT (INCLUDING NEGLIGENCE OR STRICT LIABILITY), OR OTHERWISE.

Asbestos

Federal Law requires that building or facility owners identify the presence, location and quantity of asbestos containing material (hereinafter "ACM") at work sites. Seller is not licensed to abate ACM. Accordingly, for any contract which includes the provision of Services, prior to (i) commencement of work at any site under a specific Purchase Order, (ii) a change in the work scope of any Purchase Order, the Buyer will certify that the work area associated with the Seller's scope of work includes the handling of Class II ACM, including but not limited to generator wedges and high temperature gaskets which include asbestos materials. The Buyer shall, at its expense, conduct abatement should the removal, handling, modification or reinstallation, or some or all of them, of said Class II ACM be likely to generate airborne asbestos fibers; and should such abatement affect the cost of or time of performance of the work then Seller shall be entitled to an equitable adjustment in the schedule, price and other pertinent affected provisions of the contract.

Compliance with Nuclear Regulation

Seller's Products are sold as commercial grade Products not intended for application in facilities or activities licensed by the United States Nuclear Regulatory Commission for atomic purposes. Further certification will be required for use of the Products in any safety-related application in any nuclear facility licensed by the U.S. Nuclear Regulatory Commission.

Returning Products

Authorization and shipping instructions for the return of any Products must be obtained from Seller before returning the Products.

When return is occasioned due to Seller error, full credit including all transportation charges will be allowed.

Product Notices

Buyer shall provide the user (including its employees) of the Products with all Seller supplied Product notices, warnings, instructions, recommendations, and similar materials.

Force Majeure

Seller shall not be liable for failure to perform or delay in performance due to fire, flood, strike or other labor difficulty, act of God, act of any governmental authority or of the Buyer, riot, embargo, fuel or energy shortage, car shortage, wrecks or delays in transportation, or due to any other cause beyond Seller's reasonable control. In the event of delay in performance due to any such cause, the date of delivery or time for completion will be extended by a period of time reasonably necessary to overcome the effect of such delay.

Liquidated Damages

Contracts which include liquidated damage clauses for failure to meet shipping or job completion promises are not acceptable or binding on Seller, unless such clauses are specifically accepted in writing by an authorized representative of the Seller at its headquarters office.

Patent Infringement

Seller will defend or, at its option, settle any suit or proceeding brought against Buyer, or Buyer's customers, to the extent it is based upon a claim that any Product or part thereof, manufactured by Seller or its subsidiaries and furnished hereunder, infringes any United States patent, other than a claim of infringement based upon use of a Product or part thereof in a process, provided Seller is notified in reasonable time and given authority, information and assistance (at Seller's expense) for the defense of same. Seller shall pay all legal and court costs and expenses and court-assessed damages awarded therein against Buyer resulting from or incident to such suit or proceeding. In addition to the foregoing, if at any time Seller determines there is a substantial question of infringement of any United States patent, and the use of such Product is or may be enjoined, Seller may, at its option and expense: either (a) procure for Buyer the right to continue using and selling the Product; (b) replace the Product with non-infringing apparatus; (c) modify the Product so it becomes non-infringing; or (d) as a last resort, remove the Product and refund the purchase price, equitably adjusted for use and obsolescence. In no case does Seller agree to pay any recovery based upon its Buyer's savings or profit through use of Seller's Products whether the use be special or ordinary. The foregoing states the entire liability of Seller for patent infringement.

The preceding paragraph does not apply to any claim of infringement based upon: (a) any modification made to a Product other than by Seller; (b) any design and/or specifications of Buyer to which a Product was manufactured; or (c) the use or combination of Product with other products where the Product does not itself infringe. As to the above-identified claim situations where the preceding paragraph does not apply, Buyer shall defend and hold Seller harmless in the same manner and to the extent as Seller's obligations described in the preceding paragraph. Buyer shall be responsible for obtaining (at Buyer's expense) all license rights required for Seller to be able to use software products in the possession of Buyer where such use is required in order to perform any Service for Buyer.

With respect to a Product or part thereof not manufactured by Seller or its subsidiaries, Seller will attempt to obtain for Buyer, from the supplier(s), the patent indemnification protection normally provided by the supplier(s) to customers.

Compliance with OSHA

Seller offers no warranty and makes no representation that its Products comply with the provisions or standards of the Occupational Safety and Health Act of 1970, or any regulation issued thereunder. In no event shall Seller be liable for any loss, damage, fines, penalty or expenses arising under said Act.

Limitation of Liability

THE REMEDIES OF THE BUYER SET FORTH IN THIS CONTRACT ARE EXCLUSIVE AND ARE ITS SOLE REMEDIES FOR ANY FAILURE OF SELLER TO COMPLY WITH ITS OBLIGATIONS HEREUNDER.

NOTWITHSTANDING ANY PROVISION IN THIS CONTRACT TO THE CONTRARY, IN NO EVENT SHALL SELLER BE LIABLE IN CONTRACT, IN TORT (INCLUDING NEGLIGENCE OR STRICT LIABILITY) OR OTHERWISE FOR DAMAGE TO PROPERTY OR EQUIPMENT OTHER THAN PRODUCTS SOLD HEREUNDER, LOSS OF PROFITS OR REVENUE, LOSS OF USE OF PRODUCTS, COST OF CAPITAL, CLAIMS OF CUSTOMERS OF THE BUYER OR ANY SPECIAL, INDIRECT, INCIDENTAL OR CONSEQUENTIAL DAMAGES WHATSOEVER, REGARDLESS OF WHETHER SUCH POTENTIAL DAMAGES ARE FORESEEABLE OR IF SELLER HAS BEEN ADVISED OF THE POSSIBILITY OF SUCH DAMAGES.

THE TOTAL CUMULATIVE LIABILITY OF SELLER ARISING FROM OR RELATED TO THIS CONTRACT WHETHER THE CLAIMS ARE BASED IN CONTRACT, IN TORT (INCLUDING NEGLIGENCE OR STRICT LIABILITY) OR OTHERWISE, SHALL NOT EXCEED THE PRICE OF THE PRODUCT OR SERVICES ON WHICH SUCH LIABILITY IS BASED.

Acme Electric: 120V/12V Transformer - TB-81325

GROUP D

208/240/277/380/480 PRIMARY VOLTS—24 SECONDARY VOLTS—1Ø, 50/60 Hz

CATALOG NO.	VA RATING	OUTPUT AMPS	APPROX. DIMENSIONS INCHES (CM.) A	B	C	D	E	F	APPROX. SHIP WEIGHT LBS. (KG.)	PRIMARY FUSE BLOCK PART NO.	SECONDARY FUSE KIT ① PART NO.	SECONDARY FUSE SIZE 24 VOLTS
TB81321	50	2.08	4.08 (10.4)	3.75 (9.5)	3.40 (8.6)	3.13 (8.0)	2.19 (5.6)	.22 x .50 (0.6 x 1.3)	4 (1.8)	PL112701	*	3 2/10 amp
TB81322	75	3.13	4.31 (10.9)	3.75 (9.5)	3.40 (8.6)	3.13 (8.0)	2.31 (5.9)	.22 x .50 (0.6 x 1.3)	5 (2.3)	PL112701	*	5 amps
TB81323	100	4.17	4.52 (11.5)	3.75 (9.5)	3.40 (8.6)	3.13 (8.0)	2.63 (6.7)	.22 x .50 (0.6 x 1.3)	5 (2.3)	PL112701	*	6 1/4 amps
TB81324	150	6.25	4.75 (12.1)	4.50 (11.4)	3.84 (9.8)	3.75 (9.5)	3.05 (7.7)	.22 x .50 (0.6 x 1.3)	9 (4.1)	PL112702	*	10 amps
TB81325	250	10.42	5.24 (13.3)	4.65 (11.8)	4.15 (10.5)	4.06 (10.3)	3.25 (8.3)	.22 x .50 (0.6 x 1.3)	11 (5.0)	PL112702	*	15 amps
TB81326	350	14.58	6.02 (15.3)	5.25 (13.3)	4.47 (11.4)	4.38 (11.1)	4.00 (10.2)	.31 x .50 (0.8 x 1.3)	18 (8.2)	PL112704	*	20 amps
TB81327	500	20.83	6.51 (16.5)	5.25 (13.3)	4.47 (11.4)	4.38 (11.1)	4.19 (10.6)	.31 x .50 (0.8 x 1.3)	19 (8.6)	PL112704	*	30 amps
TB81328	750	31.25	7.08 (18.0)	6.75 (17.1)	5.78 (14.7)	5.75 (14.6)	3.81 (9.7)	.31 x .50 (0.8 x 1.3)	26 (11.8)	PL112705	*	— 33 amps
TB81329	1000	41.67	8.10 (20.6)	6.75 (17.1)	5.72 (14.5)	5.75 (14.6)	4.63 (11.8)	.31 x .50 (0.8 x 1.3)	33 (15.0)	PL112705	*	—

* See fusing chart for secondary fuse kits.

GROUP E

208/277/380 PRIMARY VOLTS—115/95 SECONDARY VOLTS—1Ø, 50/60 Hz

CATALOG NO.	VA RATING	OUTPUT AMPS @ 115V	APPROX. DIMENSIONS INCHES (CM.) A	B	C	D	E	F	APPROX. SHIP WEIGHT LBS. (KG.)	PRIMARY FUSE BLOCK PART NO.	SECONDARY FUSE KIT ① PART NO.	SECONDARY FUSE SIZE 115 VOLTS
TB81301	50	0.43	4.35 (11.0)	3.00 (7.6)	2.70 (6.8)	2.50 (6.4)	2.61 (6.6)	.22 x .50 (0.6 x 1.3)	4 (1.8)	PL112700	*	6/10 amp
TB81302	75	0.65	4.74 (12.0)	3.00 (7.6)	2.70 (6.8)	2.50 (6.4)	2.81 (7.1)	.22 x .50 (0.6 x 1.3)	4 (1.8)	PL112700	*	1 amp
TB81303	100	0.87	4.45 (11.3)	3.75 (9.5)	3.40 (8.6)	3.13 (8.0)	2.44 (6.2)	.22 x .50 (0.6 x 1.3)	5 (2.3)	PL112701	*	1 1/4 amps
TB81304	150	1.30	5.00 (12.7)	3.75 (9.5)	3.84 (9.8)	3.13 (8.0)	3.06 (7.8)	.22 x .50 (0.6 x 1.3)	5 (2.3)	PL112701	*	2 amps
TB81305	250	2.17	5.68 (14.4)	4.50 (11.4)	3.84 (9.8)	3.75 (9.5)	4.06 (10.3)	.22 x .50 (0.6 x 1.3)	13 (5.9)	PL112702	*	3 1/2 amps
TB81306	350	3.04	6.30 (16.0)	4.65 (11.8)	4.15 (10.5)	4.06 (10.3)	4.75 (12.1)	.22 x .50 (0.6 x 1.3)	18 (8.2)	PL112702	*	5 amps
TB81307	500	4.35	6.22 (15.8)	5.25 (13.3)	4.47 (11.4)	4.38 (11.1)	4.56 (11.6)	.22 x .50 (0.6 x 1.3)	20 (9.1)	PL112704	*	7 amps
TB81308	750	6.52	6.82 (17.3)	6.75 (17.1)	5.78 (14.7)	5.75 (14.6)	3.69 (9.4)	.31 x .50 (0.8 x 1.3)	24 (10.9)	PL112705	*	10 amps
TB81309	1000	8.70	7.96 (20.2)	6.75 (17.1)	5.72 (14.5)	5.75 (14.6)	4.44 (11.3)	.31 x .50 (0.8 x 1.3)	31 (14.1)	PL112705	*	12 amps

* See fusing chart for secondary fuse kits.

① Secondary Fuse Kit PL112603 may be substituted for PL112600 thru PL112602 when Primary Fuse Kit is used. See page 62.
② See chart for integrally mounted fuse block catalog number suffix.

Acme Electric: 500V Transformer – TB-83218

GROUP J

240 X 480 PRIMARY VOLTS—120/240 SECONDARY VOLTS—1Ø, 60 Hz

CATALOG NO.	VA RATING	OUTPUT AMPS @ 120V	APPROX. DIMENSIONS INCHES (CM.) A	B	C	D	E	F	APPROX. SHIP WEIGHT LBS. (KG.)	PRIMARY FUSE BLOCK PART NO.
TB83210	50	0.42	4.13 (10.5)	3.00 (7.6)	2.70 (6.8)	2.50 (6.4)	2.30 (5.8)	.22 x .50 (0.6 x 1.3)	4 (1.8)	PL112700
TB83212	100	0.83	4.90 (12.4)	3.00 (7.6)	2.70 (6.8)	2.50 (6.4)	3.35 (8.5)	.22 x .50 (0.6 x 1.3)	4 (1.8)	PL112700
TB83213	150	1.25	4.92 (12.5)	3.75 (9.5)	3.40 (8.6)	3.13 (8.0)	2.81 (7.1)	.22 x .50 (0.6 x 1.3)	6 (2.7)	PL112701
TB83215	250	2.08	5.38 (13.7)	4.50 (11.4)	3.84 (9.8)	3.75 (9.5)	3.05 (7.7)	.22 x .50 (0.6 x 1.3)	9 (4.1)	PL112702
TB83218	500	4.17	6.06 (15.4)	5.25 (13.3)	4.47 (11.4)	4.06 (10.3)	4.06 (10.3)	.22 x .50 (0.6 x 1.3)	13 (5.9)	PL112704
TB83219	750	6.25	6.43 (16.3)	5.25 (13.3)	4.47 (11.4)	4.38 (11.1)	5.30 (13.0)	.31 x .50 (0.8 x 1.3)	21 (9.5)	PL112704
TB83220	1000	8.33	7.34 (18.6)	6.75 (17.1)	5.78 (14.7)	5.75 (14.6)	3.69 (9.4)	.31 x .50 (0.8 x 1.3)	24 (10.9)	PL112705
TA83221	1500	12.50	8.80 (22.4)	6.75 (17.1)	5.72 (14.5)	5.75 (14.6)	5.02 (12.8)	.31 x .50 (0.8 x 1.3)	43 (19.5)	PL112705
TA83222	2000	16.67	9.15 (23.2)	6.75 (17.1)	5.72 (14.5)	5.75 (14.6)	5.42 (13.8)	.31 x .50 (0.8 x 1.3)	48 (21.8)	PL112705
TA83223	3000	25.00	7.00 (17.8)	7.50 (19.1)	7.66 (19.5)	6.50 (16.5)	5.55 (14.1)	.41 x .81 (1.0 x 2.1)	51 (23.1)	PL112706
TA83224	5000	41.67	7.06 (17.9)	11.92 (30.3)	8.75 (22.2)	6.75 (17.1)	5.75 (14.6)	.41 x .81 (1.0 x 2.1)	90 (40.8)	PL112707

GROUP K

600 PRIMARY VOLTS—120/240 SECONDARY VOLTS—1Ø, 60 Hz

CATALOG NO.	VA RATING	OUTPUT AMPS @ 120V	APPROX. DIMENSIONS INCHES (CM.) A	B	C	D	E	F	APPROX. SHIP WEIGHT LBS. (KG.)	PRIMARY FUSE BLOCK PART NO.
TA-3310	50	0.42	4.13 (10.5)	3.00 (7.6)	2.59 (6.6)	2.50 (6.4)	2.30 (5.8)	.22 x .50 (0.6 x 1.3)	4 (1.8)	PL112700
TA83311	100	0.83	4.90 (12.4)	3.00 (7.6)	2.59 (6.6)	2.50 (6.4)	3.35 (8.5)	.22 x .50 (0.6 x 1.3)	4 (1.8)	PL112700
TA83312	150	1.25	4.92 (12.5)	3.75 (9.5)	3.21 (8.2)	3.13 (8.0)	2.81 (7.1)	.22 x .50 (0.6 x 1.3)	6 (2.7)	PL112701
TA83313	250	2.08	5.38 (13.7)	4.50 (11.4)	3.84 (9.8)	3.75 (9.5)	3.05 (7.7)	.22 x .50 (0.6 x 1.3)	9 (4.1)	PL112702
TA83314	500	4.17	6.06 (15.4)	4.88 (12.4)	4.15 (10.5)	4.06 (10.3)	4.06 (10.3)	.22 x .50 (0.6 x 1.3)	13 (5.9)	PL112703
TA83315	750	6.25	6.43 (16.3)	5.25 (13.3)	4.47 (11.4)	4.38 (11.1)	4.00 (10.2)	.31 x .50 (0.8 x 1.3)	21 (9.5)	PL112704
TA83316	1000	8.33	7.34 (18.6)	6.75 (17.1)	5.72 (14.5)	5.75 (14.6)	3.69 (9.4)	.31 x .50 (0.8 x 1.3)	24 (10.9)	PL112705

⋆ See fusing chart for secondary fuse kits.

TA & TB SERIES PROTECTIVE DEVICES – Primary Fuse Kits

FUSES ARE NOT INCLUDED. CONSULT CATALOG FOR PROPER FUSE SELECTION.

CATALOG NO.	APPROX. SHIP WEIGHT Lbs. (Kg.)
PL112700	1 (0.5)
PL112701	1 (0.5)
PL112702	1 (0.5)
PL112703	1 (0.5)
PL112704	1 (0.5)
PL112705	1 (0.5)
PL112706	1 (0.5)
PL112707	1 (0.5)

TA SERIES PROTECTIVE DEVICES – Secondary Fuse Kits

FOR USE WITH INDUSTRIAL CONTROL TRANSFORMERS THROUGH 1500 VA.

CATALOG NO.	APPROX. SHIP WEIGHT Lbs. (Kg.)
PL112600	0.5 (0.2)
PL112601	0.5 (0.2)
PL112602	1 (0.5)
PL112603	1 (0.5)

TB SERIES PROTECTIVE DEVICES– Secondary Fuse Kits

CATALOG NO.	VA	DESCRIPTION	APPROX. SHIPPING WT. (LBS./KG.)
PL79924		Fuse Kit: Secondary Fuse 1/4" x 1-1/4" w/ARM	1.0 (0.5)
PL79928	50 – 350	Link: Small Jumper Links (Qty. 2)	1.0 (0.5)
PL79929	500 & 750	Link: Large Jumper Links (Qty. 2)	1.0 (0.5)
PL79930	50 – 350	Fuse Kit: Secondary Fuse Midget w/ARM	1.0 (0.5)
PL79931	500 & 1000	Fuse Kit: Secondary Fuse Midget w/ARM	1.0 (0.5)

Littlefuse: Transformer Fuses – FLSR 30ID

Part Number: **FLSR030ID**

Series: **FLSR_ID**

FLSR_ID Series - UL Class RK5 Dual-Element Time-Delay Fuse With Indication

Littelfuse FLSR_ID Indicator™ fuses provide visual blown fuse indication at a glance. The patented state-of-the-art solid state design provides maximum reliability and superior performance characteristics in a true dual-element design. The use of Indicator™ fuses reduces down-time, nuisance opening, increases safety, and can save thousands of dollars in lost production time.

Applications:

- Service entrance switches
- Switchboard main and feeder switches
- Motor control center mains and motor branch circuits
- Individual fused combination motor controllers
- Distribution panelboards
- Industrial control panels
- Protection of fully-rated panelboards and loadcenters
- All general purpose circuits

Features/Benefits:

- Reduce Down-Time — A glance at the indicating window of a FLSR_ID Indicator™ fuse pinpoints open fuses immediately. If the window is dark, the fuse has opened. It's that simple. No fuse testing required. Machine operators can immediately determine that there is an open fuse and request maintenance personnel to bring the proper replacement.
- Reduce Nuisance Opening — FLSR_ID Indicator™ fuses have superior time-delay and cycling characteristics which can lengthen fuse life and decrease needless opening.
- Reduce Fuse Inventory — Because FLSR_ID Indicator™ fuses have superior performance characteristics they can be used on a variety of applications, thus decreasing fuse inventory.
- Reduce Equipment Damage — FLSR_ID Indicator™ fuses have superior overload and short circuit protection which can reduce equipment damage.
- Reduce Accidents — The FLSR_ID Indicator™ fuses improve safety by minimizing exposure to live circuits. Unlike other forms of blown fuse indication, Indicator™ fuses provide built-in blown fuse indication with the power on or off. No second guessing whether a light means a good or bad fuse and no current going across a blown fuse to power a lighted accessory.

Electrical Characteristics

Help	Property	Value
?	Ampere Rating (A)	30

Request a Sample

Check Distributor Stock
Click Here

Find A Distributor

Design Support

Have A Question?
Ask an expert here. click here

Certification

Plant Certifications

Environmental Data

Environmental Info

VDC (V)	300
VAC (V)	600
Package Size	Industrial Cartridge
Opening	Slo-Blo®/Time Lag (T)/Time Delay
Interrupt Rating	20000A@300VDC
Interrupt Rating	300000A@600VAC

PowerLine: DC Power Supply – 0900-77

PowerLine
POWER YOUR LIFESTYLE

Search...

HOME | USB POWER | HOUSEHOLD | MOBILE | SUPPORT

- Home
- USB Power
- **Household**
  - DC Power Socket
  - **Universal Adapters**
    - 600ma Adapter
    - **1300ma Adapter**
    - 600ma Adapter +
    - 1300ma Adapter +
  - Global Power Converter
  - Car/Home USB Adapters
    - AC/DC Dual Port USB
- Mobile
- Support

1300 ma Universal AC Adapter with USB Power Port

The PowerLine 1300 ma Universal AC Adapter is perfect as a replacement for expensive batteries or to replace lost AC adapters.

- Eliminates the Need for Expensive Batteries
- Provides 3 – 12 Volts DC at up to 600 ma
- One USB Power Port with 1300ma of Power
- Includes 7 Plug Tips for use with a Wide Variety of Electronic Products
- Reversible Plug Tips for Setting Polarity
- Perfect Replacement for Batteries or Lost Adapters

PowerLine Model# 0900-77, 0900-92, 90304

Click the video for usage instructions.

HOME HOUSEHOLD UNIVERSAL ADAPTERS > > > 1300MA ADAPTER

PowerLine

© Copyright 2009, All Rights Reserved

Restore Default Settings

Omron: Hour Meter – H7ET

Self-powered Totalizer

New H7E

CSM_H7E_-N_DS_E_7_1

Compact Economical Totalizer with High Visibility Available with Backlit LCD Display

- Large display with 8.6-mm character height.
- Includes new models with backlight for improved visibility in dimly lit places. (Requires 24-VDC power supply.)
- Black and light-gray cases now available.
- PNP/NPN universal DC voltage input types now available.
- Battery is replaceable for Totalizer reuse and conservation of the environment.
- Key-protect switch to prevent faulty reset key operation.
- Dual operation mode.
- Front face compatible with NEMA4/IP66.
- Short body, all models have a depth of 48.5 mm.
- Finger protection terminal block conforms to VDE0106, Part100.
- Conforms to UL, CSA, and CE marking.
  Conforms to EN61010-1 (pollution degree 2/overvoltage category III.)
- Conforms to EMC standards and EN61326, thus allowing use in residential, commercial and light- and heavy-industry environments.
- Six-language instruction manual provided.
- PCB-mounting models available. (Requires 3-V power supply.)

■ Broad Line-up of the New H7E Series

New H7E

New H7EC

Total Counter
- 8-digit

New H7ET

Time Counter
- 999999.9h/ 3999d23.9h
- 999h59min59s/ 9999h59.9min

New H7ER

Tachometer
- 1,000 s^{-1} with 1 pulse/rev. encoder
- 1,000.0 s^{-1} with 10 pulse/rev. encoder
- 1,000 min^{-1} with 60 pulse/rev. encoder
- 10,000 min^{-1} with 60 pulse/rev. encoder
- 1,000.0 min^{-1} with 600 pulse/rev. encoder

New H7E□-N□P

PCB-mounting Counter
- Total Counter (8-digit)
- Time Counter (999999.9h)

Contents

Self-powered Totalizers

H7EC 2
H7ET 9
H7ER 16
H7E□-N□P 22

Common to All Totalizers

Accessories 27
Precautions 29

Self-powered Total Counter

New H7EC

- Eight-digits, counting range 0 to 99999999.
- Dual input speed: 30 Hz ←→ 1 kHz (except for AC/DC multi-voltage input models)

CE UL CSA LR

Model Number Structure

■ Model Number Legend

Note: Some configurations are not available.

H7EC - N □ - □ □
1 2 3

1. Count Input
- None: No-voltage input
- V: PNP/NPN universal DC voltage input
- FV: AC/DC multi-voltage input

2. Case Color
- None: Light gray
- B: Black

3. Display
- None: 7-segment LCD without backlight
- H: 7-segment LCD with backlight

Ordering Information

■ Total Counters

Count input	Max. counting speed	Display	Model	
			Light-gray body	Black body
PNP/NPN universal DC voltage input (4.5 to 30 VDC)	30 Hz ←→ 1 kHz (switchable)	7-segment LCD with backlight	H7EC-NV-H	H7EC-NV-BH
		7-segment LCD	H7EC-NV	H7EC-NV-B
AC/DC multi-voltage input (24 to 240 VAC/VDC)	20 Hz	7-segment LCD	H7EC-NFV	H7EC-NFV-B
No-voltage	30 Hz ←→ 1 kHz (switchable)	7-segment LCD	H7EC-N	H7EC-N-B

■ Accessories (Order Separately)

Name	Model
Compact Flush Mounting Bracket	Y92F-35
Flush Mounting Bracket (See note 1)	Y92F-34
Wire-wrap Terminal (set of two Terminals)	Y92S-37
Lithium Battery (See note 2)	Y92S-36
Waterproof Packing (See note 1)	Y92S-32

Note: 1. Provided with H7EC. (Order additional Brackets separately as required.)
2. Built into H7EC. Order replacements using the above model number before the service life expires.

Specifications

■ General

Item	H7EC-NV-□ H7EC-NV-□H	H7EC-NFV-□	H7EC-N-□
Operating mode	Up type		
Mounting method	Flush mounting		
External connections	Screw terminals, optional Wire-wrap Terminals (see note 1)		
Reset	External/Manual reset		
Number of digits	8		
Count input	PNP/NPN universal DC voltage input	AC/DC multi-voltage input	No-voltage input
Display	7-segment LCD with or without backlight, zero suppression (character height: 8.6 mm) (see note 2)		
Max. counting speed	30 Hz/1 kHz	20 Hz	30 Hz/1 kHz
Case color	Light gray or black (-B models)		
Attachment	Waterproof packing, Y92F-34 Flush Mounting Bracket		
Approved standard	UL863, CSA C22.2 No.14, Lloyds Conforms to EN61010-1/IEC61010-1 (Pollution degree2/overvoltage category III) Conforms to VDE0106/P100		

Note: 1. Separately ordered Wire-wrap Terminals (Y92S-37) are required.
2. Only PNP/NPN universal DC voltage input models (-H models) have a backlight.

■ Ratings

Item	H7EC-NV-□ H7EC-NV-□H	H7EC-NFV-□	H7EC-N-□
Supply voltage	Backlight model: 24 VDC (0.3 W max.) (only for backlight) No-backlight model: Not required (powered by built-in battery)	Not required (powered by built-in battery)	
Count input	High (logic) level: 4.5 to 30 VDC Low (logic) level: 0 to 2 VDC (Input impedance: Approx. 4.7 kΩ)	High (logic) level: 24 to 240 VAC/VDC, 50/60 Hz Low (logic) level: 0 to 2.4 VAC/VDC, 50/60 Hz	No voltage input Maximum short-circuit impedance: 10 kΩ max. Short-circuit residual voltage: 0.5 V max. Minimum open impedance: 750 kΩ min.
Reset input		No voltage input Maximum short-circuit impedance: 10 kΩ max. Short-circuit residual voltage: 0.5 V max. Minimum open impedance: 750 kΩ min.	
Max. counting speed (see note)	30 Hz or 1 KHz (Switchable with switch)	20 Hz	30 Hz or 1 KHz (Switchable with switch)
Minimum signal width	20 Hz: 25 ms 30 Hz: 16.7 ms 1 KHz: 0.5 ms		
Reset system	External reset and manual reset: Minimum signal width of 20 ms		
Terminal screw tightening torque	0.98 N·m max.		
Ambient temperature	Operating: –10°C to 55°C (with no condensation or icing) Storage: –25°C to 65°C (with no condensation or icing)		
Ambient humidity	Operating 25% to 85%		

Note: ON/OFF ratio 1:1

■ Characteristics

Item	H7EC-NV-□ H7EC-NV-□H	H7EC-NFV-□	H7EC-N-□
Insulation resistance	100 MΩ min. (at 500 VDC) between current-carrying metal parts and exposed non-current-carrying metal parts, and between the backlight power supply terminal and count input terminals/reset terminals for backlight models	100 MΩ min. (at 500 VDC) between current-carrying metal parts and exposed non-current-carrying metal parts and between count input terminals and reset terminals	100 MΩ min. (at 500 VDC) between current-carrying metal parts and exposed non-current-carrying metal parts
Dielectric strength	1,000 VAC, 50/60 Hz for 1 min between current-carrying metal parts and exposed non-current-carrying metal parts and between the backlight power supply terminal and count input terminals/reset terminals for backlight models	3,700 VAC, 50/60 Hz for 1 min between current-carrying metal parts and exposed non-current-carrying metal parts 2,200 VAC, 50/60 Hz for 1 min between reset terminals and exposed non-current-carrying metal parts and between count input terminals and reset terminals	1,000 VAC, 50/60 Hz for 1 min between current-carrying metal parts and exposed non-current-carrying metal parts
Impulse withstand voltage	4.5 kV between current-carrying terminal and exposed non-current-carrying metal parts	4.5 kV between current-carrying terminal and exposed non-current-carrying metal parts 3 kV between input terminals and reset terminals	4.5 kV between current-carrying terminal and exposed non-current-carrying metal parts
Noise immunity	Square-wave noise generated by noise simulator (pulse width: 100 ns/1 µs, 1-ns rise)		
	±600 V (Between count input terminals/Between reset terminals) ±480 V (Between the backlight power supply terminals for backlight models)	±1.5 kV (Between count input terminals) ±500 V (Between reset terminals)	±500 V (Between count input terminals/Between reset terminals)
Static immunity	±8 kV (malfunction)		
Vibration resistance	Malfunction: 0.15-mm single amplitude at 10 to 55 Hz for 10 min each in 3 directions Destruction: 0.375-mm single amplitude at 10 to 55 Hz for 2 hrs each in 3 directions		
Shock resistance	Malfunction: 200 m/s² 3 times each in 6 directions Destruction: 300 m/s² 3 times each in 6 directions		
EMC	(EMI) EN61326 Emission Enclosure: EN55011 Group 1 class B (EMS) EN61326 Immunity ESD: EN61000-4-2: 4 kV contact discharge (level 2) 8 kV air discharge (level 3) Immunity RF-interference from AM Radio Waves: EN61000-4-3: 10 V/m (80 MHz to 1 GHz) (level 3) Immunity RF-interference from Pulse-modulated Radio Waves: EN61000-4-3: 10 V/m (900 MHz ± 5 MHz) (level 3) Immunity Conducted Disturbance: EN61000-4-6: 10 V (0.15 to 80 MHz) (level 3) Immunity Burst: EN61000-4-4: 2 kV power line (level 3) 2 kV I/O signal line (level 4)		
Degree of protection	Front panel: IP66, NEMA4 Terminal block: IP20		
Weight (see note)	No-backlight model: Approx. 60 g Backlight model: Approx. 65 g	Approx. 60 g	Approx. 60 g

Note: Weight includes waterproof packing and flush mounting bracket.

■ Reference Value

Item	Value	Note
Battery life	7 years min. with continuous input at 25°C (lithium battery)	The battery life is calculated according to the conditions in the left column and therefore is not a guaranteed value. Use these value as reference for maintenance or replacement.

Connections

■ Terminal Arrangement

Bottom view: View of the Total Counter rotated horizontally 180°

Backlight Model

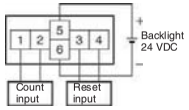

No-backlight Model

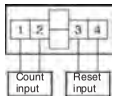

■ Connections

H7EC Total Counter

PNP/NPN Universal DC Voltage Input Model With Backlight

1. Contact Input (Input by a Relay or Switch Contact)

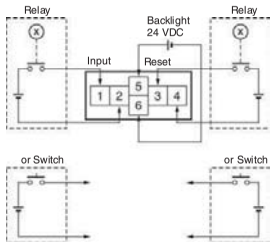

2. Solid-state Input

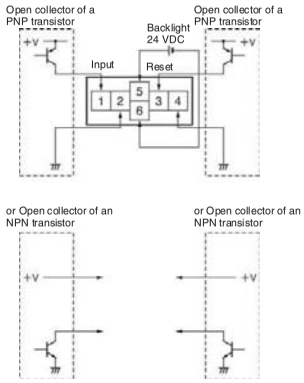

Note: 1. Terminals 2 and 4 (input circuit and reset circuit) are functionally isolated.
2. Select input transistors according to the following:
Dielectric strength of the collector ≥ 50 V
Leakage current < 100 μA

PNP/NPN Universal DC Voltage Input Model Without Backlight

1. Contact Input (Input by a Relay or Switch Contact)

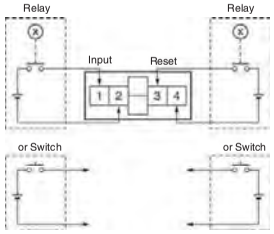

2. Solid-state Input

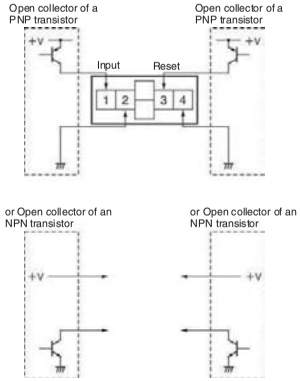

Note: 1. Terminals 2 and 4 (input circuit and reset circuit) are functionally isolated.
2. Select input transistors according to the following:
Dielectric strength of the collector ≥ 50 V
Leakage current < 100 μA

AC/DC Multi-voltage Input Model

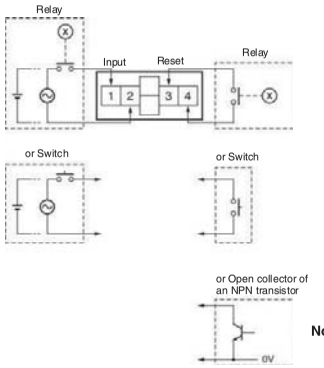

Note: Select input transistors according to the following:
Dielectric strength of the collector ≥ 50 V
Leakage current < 1 μA

No-voltage Input Model

1. Contact Input (Input by a Relay or Switch Contact)

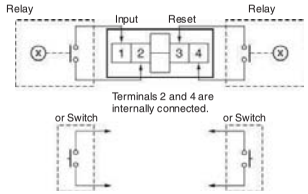

Note: Use Relays and Switches that have high contact reliability because the current flowing from terminals 1 or 3 is small. It is recommended that OMRON's G3TA-IA/ID be used as the SSR.

2. Solid-state Input
(Open Collector Input of an NPN Transistor)

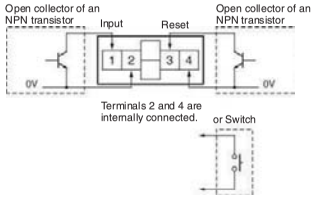

Note: 1. Residual voltage in the output section of Proximity Sensors or Photoelectric Sensors becomes less than 0.5 V because the current flowing from terminals 1 or 3 is small thus allowing easy connection.
2. Select input transistors according to the following:
Dielectric strength of the collector ≥ 50 V
Leakage current < 1 μA

Operation

■ Operating Modes

H7EC Total Counter

Incrementing Operation (Up)

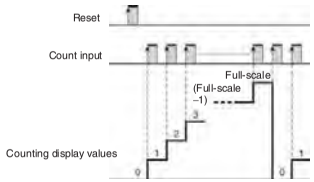

Nomenclature

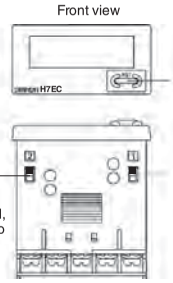

Reset Key

Reset the count value. Not operable under key-protect.

Counting speed switch

For all models except for H7EC-NFV-□. If the counting speed setting is changed, the present value will not be held and so press the Reset Key on the front panel.

Setting (see note)	Counting speed
Front panel ↑ Concave side	30 Hz (default setting)
↓ Concave side Terminal block	1 kHz

Key-protect Switch

The Reset Key is not operable while the key-protect switch is set to ON.

Setting (see note)	Key-protect
Front panel ↑ Concave side	OFF (default setting)
↓ Concave side Terminal block	ON

Note: Perform switch setting before mounting to a control panel.

Dimensions

Note: All units are in millimeters unless otherwise indicated.

H7EC-N

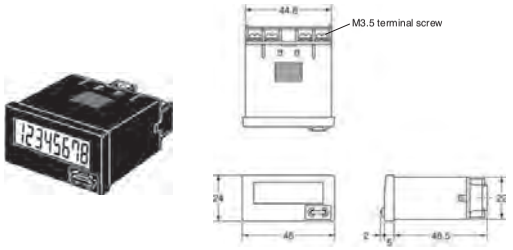

Panel Cutout

Separate mounting

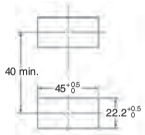

Dense mounting

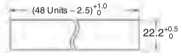

Waterproofing is not possible for dense mounting

Dimensions with Y92F-34 Flush Mounting Bracket

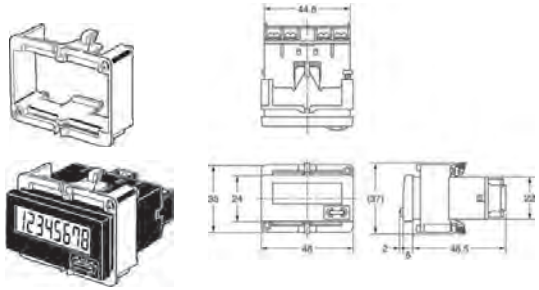

- When mounting, insert the Counter into the cutout, insert the adapter from the back and push in the Counter while making the gap between the front panel and the cutout panel as small as possible. Use screws to secure the Counter. If waterproofing is desired, insert the waterproof packing.
- When several Counters are installed, ensure that the ambient temperature will not exceed specifications.
- The appropriate thickness of the panel is 1 to 5 mm.

Note: A Compact Flush Mounting Bracket (Y92F-35) can also be used. Refer to *Accessories* for details.

Self-powered Time Counter

New H7ET

- Seven digits, time range 0 to 3999d23.9h.
- Dual time range: 999999.9 ←→ 3999d23.9h or 999h59m59s ←→ 9999h59.9m

Model Number Structure

■ Model Number Legend

Note: Some configurations are not available.

H7ET - N □ □ - □ □
(1 2 3 4)

1. Count Input
None: No-voltage input
V: PNP/NPN universal DC voltage input
FV: AC/DC multi-voltage input

2. Time Range
None: 999999.9h/3999d23.9h
1: 999h59m59s/9999h59.9m

3. Case Color
None: Light gray
B: Black

4. Display
None: 7-segment LCD without backlight
H: 7-segment LCD with backlight

Ordering Information

■ Time Counters

Timer input	Display	Time range			
		999999.9h ←→ 3999d23.9h (switchable)		999h59min59s ←→ 9999h59.9min (switchable)	
		Light-gray body	Black body	Light-gray body	Black body
PNP/NPN universal DC voltage input (4.5 to 30 VDC)	7-segment LCD with backlight	H7ET-NV-H	H7ET-NV-BH	H7ET-NV1-H	H7ET-NV1-BH
	7-segment LCD	H7ET-NV	H7ET-NV-B	H7ET-NV1	H7ET-NV1-B
AC/DC multi-voltage input (24 to 240 VAC/VDC)	7-segment LCD	H7ET-NFV	H7ET-NFV-B	H7ET-NFV1	H7ET-NFV1-B
No-voltage input	7-segment LCD	H7ET-N	H7ET-N-B	H7ET-N1	H7ET-N1-B

■ Accessories (Order Separately)

Name	Model
Compact Flush Mounting Bracket	Y92F-35
Flush Mounting Bracket (See note 1)	Y92F-34
Wire-wrap Terminal (set of two terminals)	Y92S-37
Lithium Battery (See note 2)	Y92S-36
Waterproof Packing (See note 1)	Y92S-32

Note: 1. Provided with H7ET. (Order additional Brackets separately as required.)
2. Built into H7ET. Order replacements using the above model number before the service life expires.

Specifications

■ General

Item	H7ET-NV-□ H7ET-NV-□H	H7ET-NFV-□	H7ET-N-□	H7ET-NV1-□ H7ET-NV1-□H	H7ET-NFV1-□	H7ET-N1-□
Operating mode	Accumulating					
Mounting method	Flush mounting					
External connections	Screw terminals					
Reset	External/Manual reset					
Display	7-segment LCD with or without backlight, zero suppression (character height: 8.6 mm) (see note 1)					
Number of digits	7					
Time range	0.0h to 999999.9h ←→ 0.0h to 3999d23.9h (switchable with switch)			0s to 999h59min59s ←→ 0.0min to 9999h59.9min (switchable with switch)		
Timer input	PNP/NPN universal DC voltage input	AC/DC multi-voltage input	No-voltage input	PNP/NPN universal DC voltage input	AC/DC multi-voltage input	No-voltage input
Case color	Light gray or black (-B models)					
Attachment	Waterproof packing, Y92F-34 Flush Mounting Bracket, time unit labels (see note 2)					
Approved standard	UL863, CSA C22.2 No.14, Lloyds Conforms to EN61010-1/IEC61010-1 (pollution degree2/overvoltage category III) Conforms to VDE0106/P100					

Note: 1. Only PNP/NPN universal DC voltage input models (-H models) have a backlight.
2. "-hours", "-d-h", "-h-m", and "-h-m-s" labels are included.

■ Ratings

Item	H7ET-NV□-□ H7ET-NV□-□H	H7ET-NFV□-□	H7ET-N□-□
Supply voltage	Backlight model: 24 VDC (0.3 W max.) (for backlight) No-backlight model: Not required (powered by built-in battery)	Not required (powered by built-in battery)	
Timer input	High (logic) level: 4.5 to 30 VDC Low (logic) level: 0 to 2 VDC (Input impedance: Approx. 4.7 kΩ)	High (logic) level: 24 to 240 VAC/VDC, 50/60 Hz Low (logic) level: 0 to 2.4 VAC/VDC, 50/60 Hz	No voltage input Maximum short-circuit impedance: 10 kΩ max. Short-circuit residual voltage: 0.5 V max. Minimum open impedance: 750 kΩ min.
Reset input		No voltage input Maximum short-circuit impedance: 10 kΩ max. Short-circuit residual voltage: 0.5 V max. Minimum open impedance: 750 kΩ min.	
Minimum pulse width	1 s		
Reset system	External reset and manual reset: Minimum signal width of 20 ms		
Terminal screw tightening torque	0.98 N·m max.		
Ambient temperature	Operating: –10°C to 55°C (with no condensation or icing) Storage: –25°C to 65°C (with no condensation or icing)		
Ambient humidity	Operating: 25% to 85%		

■ Characteristics

Item	H7ET-NV□-□ H7ET-NV□-H□	H7ET-NFV□-□	H7ET-N□-□
Time accuracy	±100 ppm (25°C)		
Insulation resistance	100 MΩ min. (at 500 VDC) between current-carrying metal parts and exposed non-current-carrying metal parts, and between the backlight power supply and timer input terminals/reset terminals for backlight models	100 MΩ min. (at 500 VDC) between current-carrying metal parts and exposed non-current-carrying metal parts and between timer input terminals and reset terminals	100 MΩ min. (at 500 VDC) between current-carrying metal parts and exposed non-current-carrying metal parts
Dielectric strength	1,000 VAC, 50/60 Hz for 1 min between current-carrying metal parts and exposed non-current-carrying metal parts and between the backlight power supply and timer input terminals/reset terminals for backlight models	3,700 VAC, 50/60 Hz for 1 min between timer input terminals and exposed non-current-carrying metal parts 2,200 VAC, 50/60 Hz for 1 min between reset terminals and exposed non-current-carrying metal parts and between timer input terminals and reset terminals	1,000 VAC, 50/60 Hz for 1 min between current-carrying metal parts and exposed non-current-carrying metal parts
Impulse withstand voltage	4.5 kV between current-carrying terminal and exposed non-current-carrying metal parts	4.5 kV between current-carrying terminal and exposed non-current-carrying metal parts 3 kV between timer input terminals and reset terminals	4.5 kV between current-carrying terminal and exposed non-current-carrying metal parts
Noise immunity	Square-wave noise generated by noise simulator (pulse width: 100 ns/1 µs, 1-ns rise)		
	±600 V (Between timer input terminals/ Between reset terminals) ±480 V (Between the backlight power supply terminals for backlight models)	±1.5 kV (Between timer input terminals) ±500 V (Between reset terminals)	±500 V (Between timer input terminals/ Between reset terminals)
Static immunity	±8 kV (malfunction)		
Vibration resistance	Malfunction: 0.15-mm single amplitude at 10 to 55 Hz for 10 min each in 3 directions Destruction: 0.375-mm single amplitude at 10 to 55 Hz for 2 hrs each in 3 directions		
Shock resistance	Malfunction: 200 m/s² 3 times each in 6 directions Destruction: 300 m/s² 3 times each in 6 directions		
EMC	(EMI) EN61326 Emission Enclosure: EN55011 Group 1 class B (EMS) EN61326 Immunity ESD: EN61000-4-2: 4 kV contact discharge (level 2) 8 kV air discharge (level 3) Immunity RF-interference from AM Radio Waves: EN61000-4-3: 10 V/m (80 MHz to 1 GHz) (level 3) Immunity RF-interference from Pulse-modulated Radio Waves: EN61000-4-3: 10 V/m (900 MHz ± 5 MHz) (level 3) Immunity Conducted Disturbance: EN61000-4-6: 10 V (0.15 to 80 MHz) (level 3) Immunity Burst: EN61000-4-4: 2 kV power line (level 3) 2 kV I/O signal line (level 4)		
Degree of protection	Front panel: IP66, NEMA4 with waterproof packing Terminal block: IP20		
Weight (see note)	No-backlight model: Approx. 60 g Backlight model: Approx. 65 g	Approx. 60 g	Approx. 60 g

Note: Weight includes waterproof packing and flush mounting bracket.

■ Reference Value

Item	Value	Note
Battery life	10 years min. with continuous input at 25°C (lithium battery)	The battery life is calculated according to the conditions in the left column and therefore is not a guaranteed value. Use these value as reference for maintenance or replacement.

Connections

■ Terminal Arrangement

Bottom view: View of the Time Counter rotated horizontally 180°

Backlight Model **No-backlight Model**

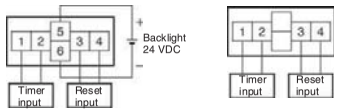

■ Connections

H7ET Time Counter

PNP/NPN Universal DC Voltage Input Model With Backlight

1. Contact Input (Input by a Relay or Switch Contact)

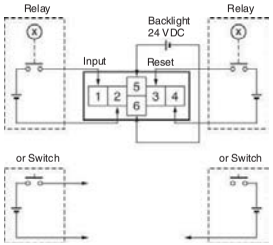

2. Solid-state Input

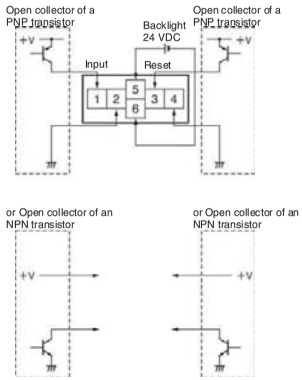

Note: 1. Terminals 2 and 4 (input circuit and reset circuit) are functionally isolated.

2. Select input transistors according to the following:
Dielectric strength of the collector ≥ 50 V
Leakage current < 1 µA

PNP/NPN Universal DC Voltage Input Model Without Backlight

1. Contact Input (Input by a Relay or Switch Contact)

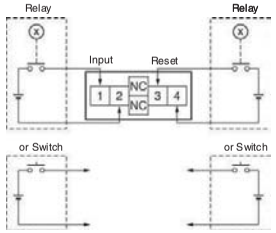

2. Solid-state Input

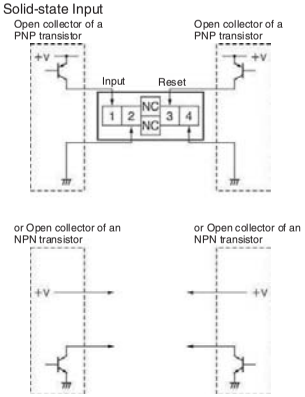

Note: 1. Terminals 2 and 4 (input circuit and reset circuit) are functionally isolated.
2. Select input transistors according to the following:
Dielectric strength of the collector ≥ 50 V
Leakage current < 1 μA

AC/DC Multi-voltage Input Model

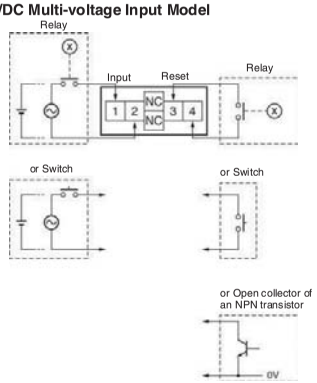

No-voltage Input Model

1. Contact Input (Input by a Relay or Switch Contact)

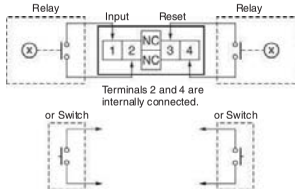

Note: Use Relays and Switches that have high contact reliability because the current flowing from terminals 1 or 3 is as small as approx. 10 μA. It is recommended that OMRON's G3TA-IA/ID be used as the SSR.

2. Solid-state Input
(Open Collector Input of an NPN Transistor)

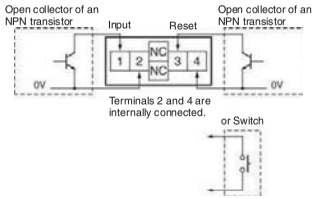

Note: 1. Residual voltage in the output section of Proximity Sensors or Photoelectric Sensors becomes less than 0.5 V because the current flowing from terminals 1 or 3 is as small as approx. 10 μA, thus allowing easy connection.
2. Select input transistors according to the following:
Dielectric strength of the collector ≥ 50 V
Leakage current < 1 μA

Operation

■ Operating Modes

H7ET Time Counter

Incrementing Operation (Up)

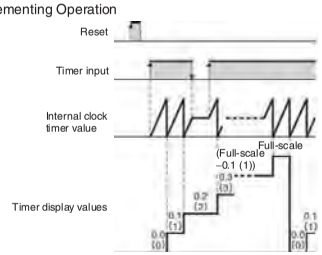

Nomenclature

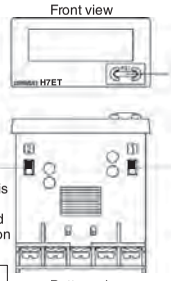

Reset Key
Reset the count value. Not operable under key-protect.

Time-range switch
If the time-range setting is changed, the present value will not be held and so press the Reset Key on the front panel.

Key-protect Switch
The Reset Key is not operable while the key-protect switch is set to ON.

Setting (see note)	Key-protect
Front panel: Concave side	OFF (default setting)
Terminal block: Concave side	ON

Setting (see note)	Time range	
	H7ET-N□□-□□	H7ET-N□□1-□□
Front panel: Concave side	0.0h to 3999d23.9h	0s to 999h59min59s (default setting)
Terminal block: Concave side	0.0h to 999999.9h (default setting)	0.0min to 9999h59.9min

Note: Perform switch setting before mounting to a control panel.

Dimensions

Note: All units are in millimeters unless otherwise indicated.

H7ET-N

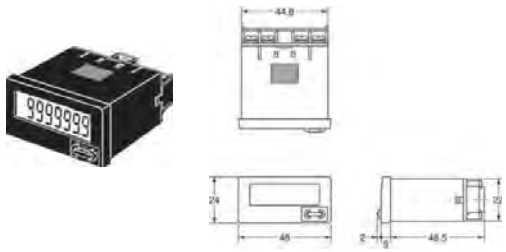

Panel Cutout

Separate mounting

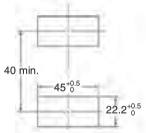

Dense mounting

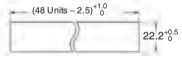

Waterproofing is not possible for dense mounting

Dimensions with Y92F-34 Flush Mounting Bracket

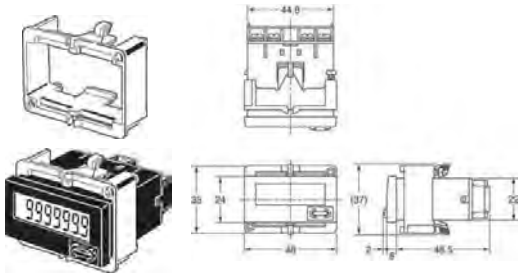

- When mounting, insert the Counter into the cutout, insert the adapter from the back and push in the Counter while making the gap between the front panel and the cutout panel as small as possible. Use screws to secure the Counter. If waterproofing is desired, insert the waterproof packing.
- When several Counters are installed, ensure that the ambient temperature will not exceed specifications.
- The appropriate thickness of the panel is 1 to 5 mm.

Note: A Compact Flush Mounting Bracket (Y92F-35) can also be used. Refer to *Accessories* for details.

Self-powered Tachometer

New H7ER

- Revolutions displayed up to five digits.
- Dual revolution display according to encoder resolution used; 1000 s^{-1}/1000 min^{-1} or 1000.0 s^{-1} /1000.0 min^{-1}
- Switchable dual revolution display type available (-NV1 models); extended up to 10000 min^{-1}

Model Number Structure

■ Model Number Legend

Note: Some configurations are not available.

H7ER - N □ □ - □ □
1 2 3 4

1. Count Input
None: No-voltage input
V: PNP/NPN universal DC voltage input

2. Number of Digits
None: 4 digits
1: 5 digits

3. Case Color
None: Light gray
B: Black

4. Display
None: 7-segment LCD without backlight
H: 7-segment LCD with backlight

Ordering Information

■ Tachometers

Count input	Display	Max. revolutions displayed (applicable encoder resolution)			
		1000 s^{-1} (1 pulse/rev.), 1000 min^{-1} (60 pulse/rev.)		1000.0 s^{-1} (10 pulse/rev.), 1000.0 min^{-1} (600 pulse/rev.) ←→ 10000 min^{-1} (60 pulse/rev.) (switchable)	
		Light-gray body	Black body	Light-gray body	Black body
PNP/NPN universal DC voltage input (4.5 to 30 VDC)	7-segment LCD with backlight	H7ER-NV-H	H7ER-NV-BH	H7ER-NV1-H	H7ER-NV1-BH
	7-segment LCD	H7ER-NV	H7ER-NV-B	H7ER-NV1	H7ER-NV1-B
No-voltage input	7-segment LCD	H7ER-N	H7ER-N-B	---	---

■ Accessories (Order Separately)

Name	Model
Compact Flush Mounting Bracket	Y92F-35
Flush Mounting Bracket (See note 1)	Y92F-34
Wire-wrap Terminal (set of two terminals)	Y92S-37
Lithium Battery (See note 2)	Y92S-36
Waterproof Packing (See note 1)	Y92S-32

Note: 1. Provided with H7ER. (Order additional Brackets separately as required.)
2. Built into H7ER. Order replacements using the above model number before the service life expires.

Specifications

■ General

Item	H7ER-NV-□ H7ER-NV-□H	H7ER-N-□	H7ER-NV1-□ H7ER-NV1-□H
Operating mode	Up type		
Mounting method	Flush mounting		
External connections	Screw terminals, Wire-wrap Terminals (see note 3)		
Display	7-segment LCD with or without backlight, zero suppression (character height: 8.6 mm) (see note 4)		
Number of digits	4		5
Count input	PNP/NPN universal DC voltage input	No-voltage input	PNP/NPN universal DC voltage input
Max. counting speed	1 kHz		10 kHz
Max. revolutions displayed (see note 5)	1,000 s^{-1} (When encoder resolution of 1 pulse/rev is used.) 1,000 min^{-1} (When encoder resolution of 60 pulse/rev is used.)		1,000.0 s^{-1} (When encoder resolution of 10 pulse/rev is used.) 1,000.0 min^{-1} (When encoder resolution of 600 pulse/rev is used.) ←→ 10,000 min^{-1} (When encoder resolution of 60 pulse/rev is used.) (Switchable with switch)
Attachment	Waterproof packing, Y92F-34 Flush Mounting Bracket, revolution unit labels (see note 5)		
Approved standard	UL863, CSA C22.2 No.14, Lloyds Conforms to EN61010-1/IEC61010-1 (Pollution degree2/overvoltage category III) Conforms to VDE0106/P100		

Note: 1. Reset is not available.
2. When there is no input, the display will be 0.0 or 0.
3. Separately ordered Wire-wrap Terminals (Y92S-37) are required.
4. Only PNP/NPN Universal DC voltage input models have a backlight.
5. "rpm", "rps", "s^{-1}" and "min^{-1}" labels are included.

■ Ratings

Item	H7ER-NV□-□ H7ER-NV□-□H	H7ER-N-□
Supply voltage	Backlight model: 24 VDC (0.3 W max.) (for backlight lit) No-backlight model: Not required (powered by built-in battery)	Not required (powered by built-in battery)
Count input	High (logic) level: 4.5 to 30 VDC Low (logic) level: 0 to 2 VDC (Input impedance: Approx. 4.7 kΩ)	No voltage input Maximum short-circuit impedance: 10 kΩ max. Short-circuit residual voltage: 0.5 V max. Minimum open impedance: 750 kΩ min.
Max. counting speed	4-digit models:1 kHz 5-digit models:10 kHz	1 kHz
Minimum signal width	10 kHz: 0.05 ms 1 kHz: 0.5 ms (See note.)	
Terminal screw tightening torque	0.98 N·m max.	
Ambient temperature	Operating: –10°C to 55°C (with no condensation or icing) Storage: –25°C to 65°C (with no condensation or icing)	
Ambient humidity	Operating: 25% to 85%	

Note: 5-digit models :1 kHz/10 kHz switchable.

■ Characteristics

Item	H7ER-NV□-□ H7ER-NV□-□H	H7ER-N-□
Insulation resistance	100 MΩ min. (at 500 VDC) between current-carrying metal parts and exposed non-current-carrying metal parts, and between the backlight power supply and count input terminals/reset terminals for backlight models	100 MΩ min. (at 500 VDC) between current-carrying metal parts and exposed non-current-carrying metal parts
Dielectric strength	1,000 VAC, 50/60 Hz for 1 min between current-carrying metal parts and exposed non-current-carrying metal parts and between the backlight power supply and count input terminals/reset terminals for backlight models	1,000 VAC, 50/60 Hz for 1 min between current-carrying metal parts and exposed non-current-carrying metal parts
Impulse withstand voltage	4.5 kV between current-carrying terminal and exposed non-current-carrying metal parts	
Noise immunity	Square-wave noise generated by noise simulator (pulse width: 100 ns/1 μs, 1-ns rise)	
	±600 V (Between count input terminals) ±480 V (Between the backlight power supply terminals for backlight models)	±500 V (Between count input terminals)
Static immunity	±8 kV (malfunction)	
Vibration resistance	Malfunction: 0.15-mm single amplitude at 10 to 55 Hz for 10 min each in 3 directions Destruction: 0.375-mm single amplitude at 10 to 55 Hz for 2 hrs each in 3 directions	
Shock resistance	Malfunction: 200 m/s^2 3 times each in 6 directions Destruction: 300 m/s^2 3 times each in 6 directions	
EMC	(EMI) EN61326 Emission Enclosure: EN55011 Group 1 class B (EMS) EN61326 Immunity ESD: EN61000-4-2: 4 kV contact discharge (level 2) 8 kV air discharge (level 3) Immunity RF-interference from AM Radio Waves: EN61000-4-3: 10 V/m (80 MHz to 1 GHz) (level 3) Immunity RF-interference from Pulse-modulated Radio Waves: EN61000-4-3: 10 V/m (900 MHz ± 5 MHz) (level 3) Immunity Conducted Disturbance: EN61000-4-6: 10 V (0.15 to 80 MHz) (level 3) Immunity Burst: EN61000-4-4: 2 kV power line (level 3) 2 kV I/O signal line (level 4)	
Degree of protection	Front panel: IP66, NEMA4 with waterproof packing Terminal block: IP20	
Weight (see note)	No-backlight model:Approx. 60 g Backlight model: Approx. 65 g	

Note: Weight includes waterproof packing and flush mounting bracket.

■ Reference Value

Item	Value	Note
Battery life	7 years min. with continuous input at 25°C (lithium battery)	The battery life is calculated according to the conditions in the left column and therefore is not a guaranteed value. Use these value as reference for maintenance or replacement.

Connections

■ Terminal Arrangement

Bottom view: View of the Tachometer rotated horizontally 180°

Backlight Model

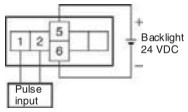

No-backlight Model

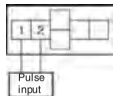

■ Connections

H7ER Tachometer

Note: Select input transistors according to the following:
Dielectric strength of the collector ≥ 50 V
Leakage current < 100 μA (1 μA for no-voltage input model)

PNP/NPN Universal DC Voltage Input Models With Backlight
Transistor Input

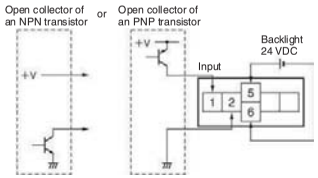

No-voltage Input Model
Transistor Input (Open Collector of an NPN Transistor)

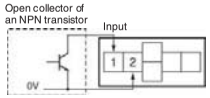

PNP/NPN Universal DC Voltage Input Models Without Backlight
Transistor Input

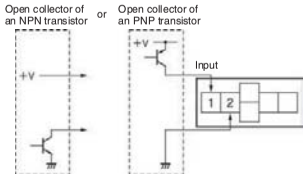

Operation

■ Operating Modes

H7ER Tachometer

Incrementing Operation
Within Unit Time (Up)

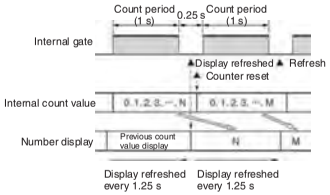

Nomenclature

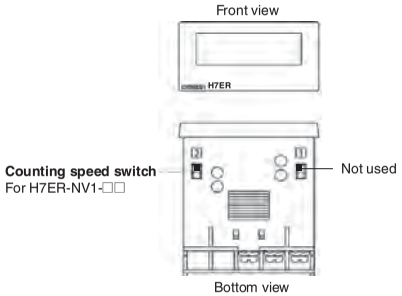

Counting Speed Switch Settings and Unit Label Application

Model	Counting speed switch setting (see note)	Max. revolutions displayed	Applicable encoder resolution	Applicable unit label
H7ER-NV1-□□	Front panel (Concave side)	10000 min^{-1} (default setting)	60 pulse/rev.	"min^{-1}" or "rpm"
	Terminal block (Concave side)	1000.0 min^{-1}	600 pulse/rev.	"min^{-1}" or "rpm"
		1000.0 s^{-1}	10 pulse/rev.	"s^{-1}" or "rps"
H7ER-N-□ H7ER-NV-□□	No setting is required	1000 min^{-1}	60 pulse/rev.	"min^{-1}" or "rpm"
		1000 s^{-1}	1 pulse/rev.	"s^{-1}" or "rps"

Note: Perform switch setting before mounting to a control panel.

Dimensions

Note: All units are in millimeters unless otherwise indicated.

H7ER-N

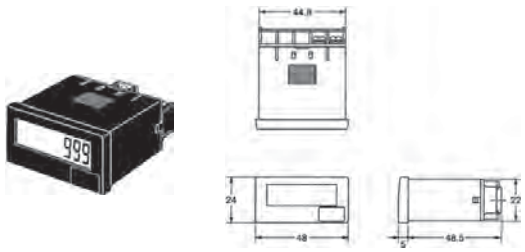

Panel Cutout

Separate mounting

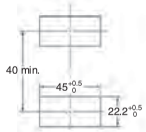

Dense mounting

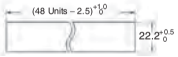

Waterproofing is not possible for dense mounting

Dimensions with Y92F-34 Flush Mounting Bracket

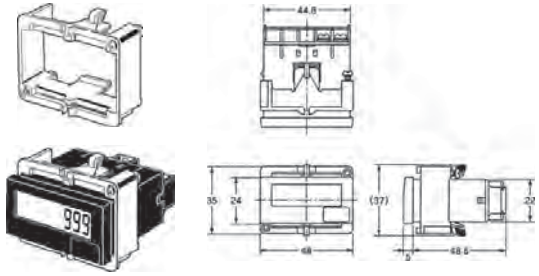

- When mounting, insert the Counter into the cutout, insert the adapter from the back and push in the Counter while making the gap between the front panel and the cutout panel as small as possible. Use screws to secure the Counter. If waterproofing is desired, insert the waterproof packing.
- When several Counters are installed, ensure that the ambient temperature will not exceed specifications.
- The appropriate thickness of the panel is 1 to 5 mm.

Note: A Compact Flush Mounting Bracket (Y92F-35) can also be used. Refer to *Accessories* for details.

PCB-mounting Counters

H7E□-N□P

- Dedicated for use on PCB.
- Total Counters and Time Counter available.

Model Number Structure

■ Model Number Legend

H7E□- N□ P
1 2

1. Function
C: Total Counter
T: Time Counter

2. Max. Counting Speed for H7EC Models
None: 1 kHz
L: 30 Hz

Ordering Information

■ PC Board-use Counters

Count input	Display	Total counter		Time counter
		Max. counting speed		
		1 kHz	30 Hz	
No-voltage input	7-segment LCD	H7EC-NP	H7EC-NLP	H7ET-NP

■ Accessory (Order Separately)

Connecting Socket (28-pin)	XR2A-2801-N

Specifications

■ General

Item	Total Counter		Time Counter
	H7EC-NP	H7EC-NLP	H7ET-NP
Operating mode	Up type		
Mounting method	Direct mounting on PC Board or mounting on 28-pin socket		
Reset	External reset, Power-OFF reset		
Number of digits	8		7
Time range	---		0.0h to 999999.9h
Max. counting speed	1 kHz	30 Hz	---
Count/Timer input	No-voltage input		
Display	7-segment LCD (character height: 8.6 mm)		
Case color	Transparent		
Approved standard	UL863, CSA C22.2 No.14		

■ Ratings

Item	H7EC-NP H7EC-NLP	H7ET-NP
Supply voltage	3 VDC (2.7 to 3.3 VDC)	
Count/Timer input **Reset input**	No voltage input Maximum short-circuit impedance: 10 kΩ max. Short-circuit residual voltage: 0.5 V max. Minimum open impedance: 750 kΩ min.	
Max. counting speed (see note)	1 kHz: Minimum signal width of 0.5 ms 30 Hz: Minimum signal width of 16.7 ms	---
Minimum signal input width	---	1 s
Reset system	External reset: Minimum signal width of 20 ms Power-OFF reset: Minimum power OFF time of 500 ms	
Ambient temperature	Operating: –10°C to 55°C (with no condensation or icing) Storage: –25°C to 65°C (with no condensation or icing)	
Ambient humidity	Operating: 25% to 85%	

Note: ON/OFF ratio 1:1

■ Characteristics

Item	H7EC-NP H7EC-NLP	H7ET-NP
Time accuracy	---	±100 ppm (25°C)
Noise immunity	Square-wave noise generated by noise simulator (pulse width: 100 ns/1 μs, 1-ns rise) ±500 V (Between count or timer input terminals/Between reset terminals)	
Static immunity	±8 kV (malfunction)	
Vibration resistance	Malfunction:0.15-mm single amplitude at 10 to 55 Hz for 10 min each in 3 directions Destruction:0.375-mm single amplitude at 10 to 55 Hz for 2 hrs each in 3 directions	
Shock resistance	Malfunction:200 m/s² 3 times each in 6 directions Destruction:300 m/s² 3 times each in 6 directions	
EMC	(EMI) EN61326 Emission Enclosure: EN55011 Group 1 class B (EMS) EN61326 Immunity ESD: EN61000-4-2: 4-kV contact discharge (level 2) 8-kV air discharge (level 3) Immunity RF-interference from AM Radio Waves: EN61000-4-3: 10 V/m (80 MHz to 1 GHz) (level 3) Immunity RF-interference from Pulse-modulated Radio Waves: EN61000-4-3: 10 V/m (900 MHz ± 5 MHz) (level 3) Immunity Conducted Disturbance (see note):EN61000-4-6: 10 V (0.15 to 80 MHz) (level 3) Immunity Burst (see note): EN61000-4-4: 2-kV I/O signal line (level 4)	
Weight	Approx. 20 g	

Note: The power supply terminals of the H7E□-N□P are considered as 3-VDC control terminals.

Connections

■ Terminal Arrangement

H7EC-N□P

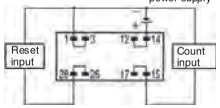

H7ET-NP

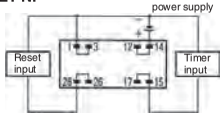

■ Connections

Power Supply and Battery Connections

Battery Connections

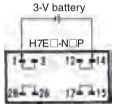

When designing a circuit, keep the power wiring connections shorter than 50 mm. Refer to the connection diagram above for the proper wiring polarity.

The life expectancy of a battery power supply can be calculated by the following formula:

$t = A/I_c$

Where,
t: Life expectancy of battery (h)
A: Battery capacity (mAh)
I_c: H7E□-N□P current consumption (mA)

Example:
Battery life when using a 3-V lithium battery with a capacity of 1,200 mAh for the H7E□-N□P.

$t = 1{,}200\ [mAh]/20 \times 10^{-3}\ [mA] = 60{,}000$ hours (approx. 6.8 years)

The battery capacity varies depending on the type of battery used; oxidized silver, mercury, or lithium battery.

Voltage Division of Power Supply Circuit

When necessary, the voltage from the battery may be divided by resistances:

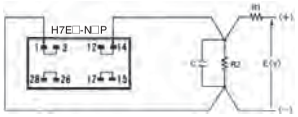

When doing so, however, ensure that the following equation balances:

$E\ (V) \times R_2 / (R_1 + R_2) = 3\ V$

R	E		
	5 V	12 V	24 V
R_1	2 kΩ	9.1 kΩ	33 kΩ
R_2	3 kΩ	3 kΩ	4.7 kΩ

Allow a current high enough to flow through R_1 so that the H7E□-N□P receives sufficient current.

C is a film capacitor, of about 0.1 μF, and is intended to absorb noise induced by the power lines.

Keep the wiring between the H7E□-N□P and R_2 or C as short as possible (within 50 mm).

Backup Circuit for Protection Against Power Failure

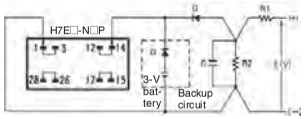

Use a diode (D) having a forward voltage as small as possible (0.1 V max. at I_F of 20 μA).

Determine the ratio of R_1 to R_2 in accordance with the forward voltage of the diode to be used. Be aware that when the power supplied to the H7E□-N□P has dropped to less than the voltage of the backup circuit, the battery will discharge.

To protect the circuit against a momentary power failure, an aluminum electrolyte capacitor can be used in place of a battery, as shown below:

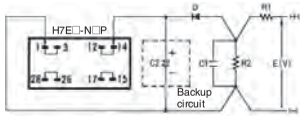

When a capacitor is used, its backup time can be calculated by the following formula:

$t = C\ (V_1 - V_2) / I_c$

Where,
t: Backup time (s)
C: Capacitance (μF)
V_1: Supply voltage before power failure (V)
V_2: Minimum operating voltage of H7E□-N□P (V)
I_c: H7E□-N□P current consumption (μA)

Example:
Backup time by an aluminum electrolytic capacitor of 100 μF. (Minimum operating voltage of H7E□-N□P is 2.6 V.)

$t = 100\ \mu F \times (3–2.6\ V)/20\ \mu A = 100 \times 0.40/20 = 2.0$ seconds

Note that the above calculation provides an approximate value, which varies depending on the environment under which the Counter is used and also on the type of capacitors used. Provide some allowance in selecting capacitors.

Keep the wiring between the H7E□-N□P and R_2 or C as short as possible (within 50 mm).

Input Connections

Input Connection Contact Input

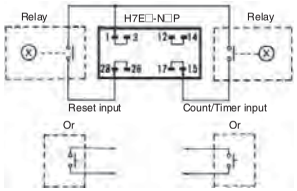

When the H7EC-NP is used, relay chattering may be counted. Use the H7EC-NLP, one of the low-speed input models.

Solid State Input

Open-collector Transistor Input

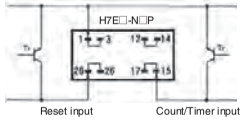

TTL or C-MOS IC Input

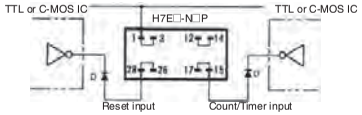

Use a transistor for input that satisfies the following conditions:
Collector breakdown voltage ≥ 50 V
Leakage current < 1 μA
Use a diode (D) having a forward voltage as small as possible (0.1 V max. at I_F of 20 μA).

Operation

■ Operating Modes

H7EC Total Counter

Incrementing Operation (Up)

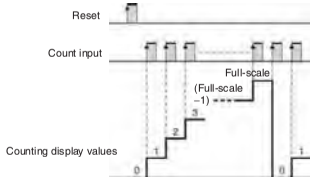

H7ET Time Counter

Incrementing Operation (Up)

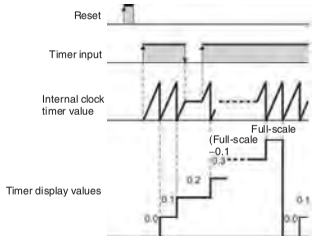

Dimensions

Note: All units are in millimeters unless otherwise indicated.

H7EC-N□P

H7ET-NP

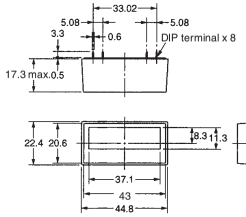

DIP Terminal

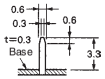

PCB Processing Dimensions (Soldering Surface)

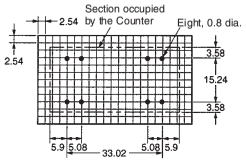

Note: Processing dimensions are for 28-pin IC socket.

Accessories (Order Separately) (Common)

■ New H7E (Except for PCB-mounting Counter)

The New H7E models are supplied with a mounting bracket (Y92F-34) and nut. Additionally, the Y92F-75/-76/-77B Flush Mounting Adapters shown here allow the New H7E models to be fitted to existing panel cutouts.

Y92F-35 Compact Flush Mounting Bracket

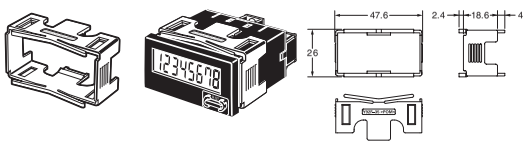

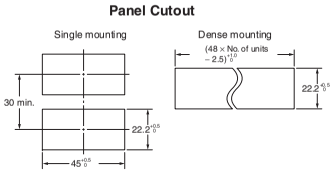

Degree of protection (front): IP40 (not waterproof)
The DIP switch of the H7E□-N can be operated in mounted condition. Vibration resistance and shock resistant are the same level as the H7E□-N series.

- The minimum mounting interval is 30 mm.
  Note: An interval of 40 mm is recommended for easier wiring.
- Do not allow the ambient temperature of the H7E□-N to exceed the specifications (55°C).
- Mounting is possible onto panels with a thickness of 1 to 5 mm.

Y92F-75 Flush Mounting Adapter for 26 × 45.3 Rectangular Cutout

Use mounting bracket supplied with the Counter

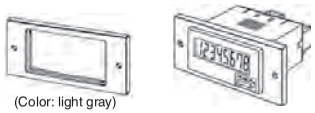

(Color: light gray)

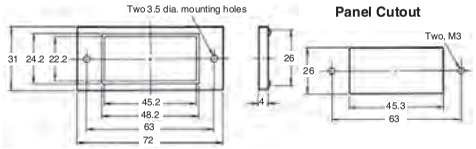

Y92F-76 Flush Mounting Adapter for 27.5 × 52.5 Rectangular Cutout

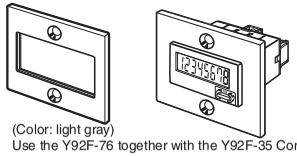

(Color: light gray)
Use the Y92F-76 together with the Y92F-35 Compact Flush Mounting Bracket.
Do not use the Flush Mounting Adapter supplied with the Counter.

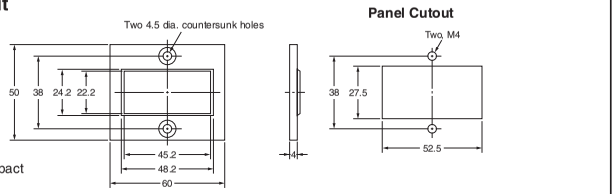

Y92F-77B Flush Mounting Adapter for 24.8 × 48.8 Rectangular Cutout

Use mounting bracket supplied with the Counter

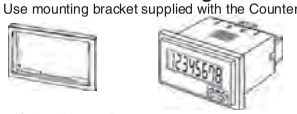

(Color: light gray)

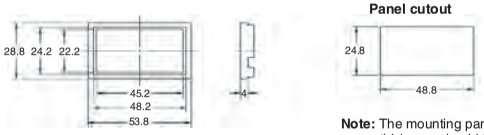

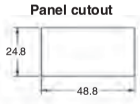

Note: The mounting panel thickness should be between 1 and 5 mm.

Y92S-37 Wire-wrap Terminal (Set of Two Terminals)

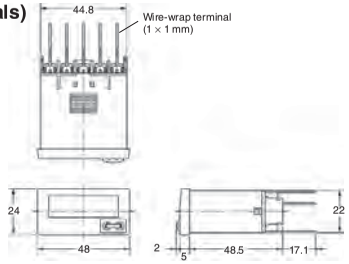

When using the Wire-wrap Terminal, be sure to use the correct wires and peripheral devices. (The correct wires, bits and sleeves are shown in the table on the right.)

Wire	Bit	Sleeve	Wrapped state
AWG22	2-A	2-B	Normal
AWG24	1-A	1-B	Normal
AWG26	3-A	1-B	Normal

Y92S-36 Lithium Battery (3 V)

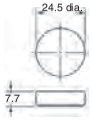

Precautions (Common)

Refer to *Safety Precautions for All Counters*.

■ New H7E (Except for PCB-mounting Counter)

⚠ WARNING

This product has a built-in lithium battery. Do not short-circuit the + and – terminals, charge, disassemble, deform, or expose the battery to fire. The battery may explode (break), catch fire, or cause liquid leakage.

Do not use any battery other than the specified one (Y92S-36). Using another battery may cause liquid leakage or breakage, resulting in malfunction or injury.

⚠ CAUTION

If a voltage other than the rated one is applied, internal elements may be damaged.
Do not use the Counter in the following places:
- Locations subject to direct sunlight.
- Locations subject to corrosive gases.
- Locations subject to dust.

Before Use

- An insulation sheet has been inserted to maintain the quality of the Totalizer in the event of a long period without use. Be sure to remove this sheet before attempting to use the product.
  Remove the insulation sheet and press the Reset Key on the front panel of the Counter. (With the H7ER-N,-NV(-H),-NV1(-H), models, "0" or "0.0" will be displayed after 1 s.)

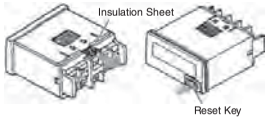

- Switch settings on the Counter must be performed before mounting it to a control panel.
- Do not use the Counter in the following locations:
  - Locations subject to severe changes in temperature.
  - Locations subject to condensation as the result of high humidity.

Mounting Precautions for Flush Mounting

Although the operating section is watertight (conforming to NEMA4, IP66), rubber packing is provided to avoid water leakage through the gap between the Counter and panel cutout. Unless this rubber packing is tightly squeezed on, water may permeate inside the panel. Therefore, be sure to tighten the screws for fixing the Y92F-34 Flush Mounting Bracket. (Excessive tightening may also deform the rubber packing.)

Screw for the Flush Mounting Bracket

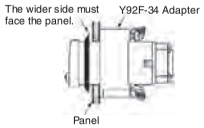

Reset Input and Count/Timer Input

- The H7E operates using its built-in Battery. If the H7E is connected to a device that has +V and OUT terminals that are connected with a diode as shown in the circuit diagram, the circuit indicated by the arrow 1 or 2 will be formed when the device is turned OFF. As a result, the H7E may be reset or count by one. It is recommended that such devices not be connected to the H7E.

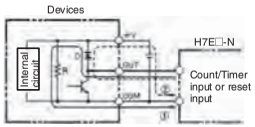

- If an excessive voltage is applied to the count/timer input or reset input terminals, the internal elements may be damaged.
  Ensure that the following voltages are not exceeded:
  - PNP/NPN universal voltage input model: 30 VDC
  - AC/DC voltage input model:
    At count/timer input: 240 VAC (peak voltage: 338V)
    240 VDC
    At reset input: No voltage can be applied. (No-voltage input)
  - No-voltage input model: No voltage can be applied.
- Avoid wiring close to high-tension or large-current lines.
- Do not remove the outer case when voltage is being applied to the power supply terminals or the input terminals.
- The input for the H7E□-NFV-□ is a high-impedance circuit and so influence from an induced voltage may result in malfunction. Therefore, when the input signal wiring is longer than 10 m (line capacitance of 120 pF/m, at room temperature), it is recommended that a CR filter or a bleeder resistor is connected.

Count Input, Timer Input or Reset Input to More than One H7E Counter at a Time

- PNP/NPN Universal DC Voltage Input

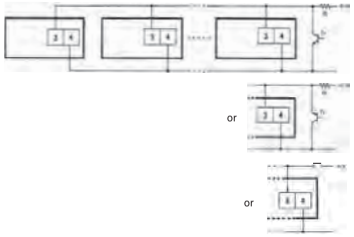

Note: H (Reset ON) level must be 4.5 V minimum.

$$H = \frac{4.7\ (k\Omega)/N + V}{4.7\ (k\Omega)/N + R}$$

- No-voltage Input

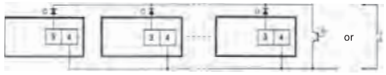

Note: 1. The leakage current of the transistor used for input must be less than 1 μA.
2. The forward voltage of the diode must be as low as possible (i.e., 0.1 V maximum with an I_F of 20 μA) so that the voltage between terminals 3 and 4 will be 0.5 V when the reset input is ON.

Input and Power Supply

No-voltage Input Models

- Do not impose voltage on the Counter if the Counter is a model that operates with no-voltage input, otherwise the internal circuit of the Counter may be damaged.
  Do not connect any single input signal in parallel to Counter models operating with no-voltage input and those operating with voltage input, otherwise the Counters may malfunction.
- When connecting a sensor to the Counter that operates with no-voltage input, make sure that the sensor has open collector output.

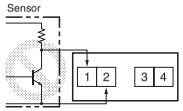

- When connecting an open collector input from a transistor to the Counter that operates with no-voltage input, make sure that the leakage current of the transistor is 1 μA maximum.

No-voltage Input and PNP/NPN Universal DC Voltage Input Models

- The operation of the Counter may be affected if the capacitance of input lines exceeds 500 pF (about 10 m, with parallel wires of 2 x 2 mm).
  Keep all wires as short as possible. When using shielded wire, line capacitance may occur.

AC/DC Multi-voltage Input Models

- When connecting count/timer input from an SSR to the Counter that operates with AC/DC voltage input, use OMRON's G3TA-IA/ID SSR (for DC) whose leakage current is 0.1 mA max. or connect a bleeder resistor in parallel to the input circuit of the Counter.

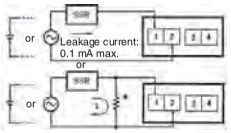

*Bleeder resistor
The voltage between terminals 1 and 2 must be 1.5 V maximum when the SSR is OFF.

Backlight Power Supply

- To reduce variation in the brightness of the backlight when using more than one H7E with a backlight, use the same power supply for all the backlights.

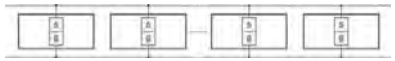

- When connecting the DC power supply for the backlights, be sure to connect the polarities correctly.

Input Verification with the H7ET Time Counter

(When the time range is not set to 0s to 999h59min59s)

The decimal point of the LCD blinks every other second while an input signal is being applied. If the decimal point is not blinking, the input signal is not being received correctly. Check the input signal connections.

Unit Label for Time Counter and Tachometer

A unit label has been packed with the Counter. Use in accordance with the application.

Battery Replacement

Remove the wiring when replacing the Battery. Do not come in contact with any item to which high voltage is being applied. Doing so may result in electric shock.

Before changing the Battery, the person should ensure that they are not carrying any static electric charge.

Procedure for replacing the Battery (refer to the diagrams below):

1. Using the tool, pry open the lift-tab on the case. (1)
2. Pull the body out of its outer case. (2)
3. Lift the Battery up by the edge and remove it. (3)
   When removing the Battery, do not come in contact with the display area or any internal parts.
4. Wipe the back of the new Battery before inserting it.
5. Ensure that the + and – terminals are correctly oriented.
6. After replacing the Battery, re-insert the body into its case. (4)
   Check that the case is securely held in by the lift-tab.

7. Press the Reset Key before use (not necessary for H7ER-N,-NV,-NV1). (5)

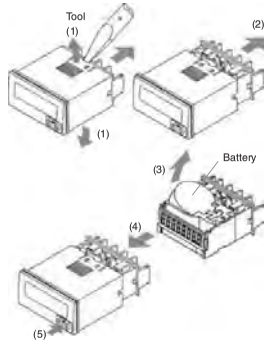

EN/IEC Standards

The count or timer input, reset input, and backlight power supply terminals of the no-voltage input or PNP/NPN universal DC voltage input models (H7E□-N,-N1, H7E□-NV(-H),-NV1(-H)) are not isolated.

A SELV power supply conforming to Appendix H of IEC61010-1 should be used for the count or timer input, reset input and backlight power supply terminals. A SELV power supply is a power supply for which the input and output have double or reinforced insulation, and for which the output voltage is 30 Vrms with 42.4 V peak or 60 VDC max. (Only the H7E□-NV□-H has a backlight.)

The terminals for count or timer input and reset input for AC/DC multi-voltage input models have basic insulation.

Connect the reset input terminals to a device that does not have exposed current-carrying parts and has basic insulation for 240 VAC.

Others

If the indicator keeps flickering or is OFF, the internal battery may be close to the end of its service life. In such a case, it is suggested that the battery be replaced.

■ PCB-mounting Counter

Power Supply

- Use the power supply within the applicable range indicated by the following waveform, while considering the ripple and voltage fluctuations of the circuit power source.

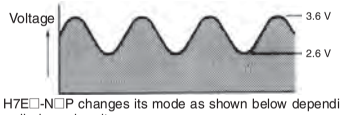

- The H7E□-N□P changes its mode as shown below depending on the applied supply voltage.

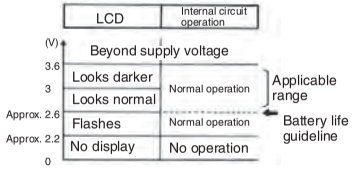

Battery Replacement

To prevent unwanted reset when replacing the battery, connect the new battery before disconnecting the old one. Otherwise, the voltage supplied to the counter circuit drops, causing the present count value to reset.

When designing the circuit board, providing two extra terminals for battery connection will make the switch must simpler. See the schematic diagram below:

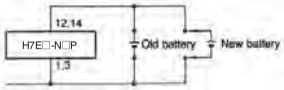

Wiring polarity must be carefully observed, in order to prevent permanent damage to the Counters. Exercise caution when inserting the Counter in the socket, to prevent reversed polarity.

Inputs

Do not route the wiring of the count, timer, or reset inputs in the vicinity of, or in parallel to the wiring of high-voltage or inductive load circuits (such as motors and relays). Also, keep the wiring as short as possible.

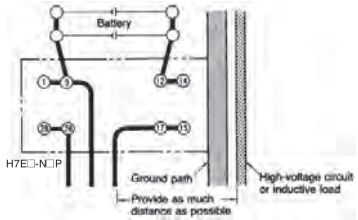

Be careful not to apply voltages exceeding the following values to the count, timer, or reset terminals, otherwise the internal circuit may be damaged.

No-voltage input: 3 VDC

General Information

Finish soldering under the conditions below.
Solder the terminals within 5 seconds, at a solder iron tip temperature of 250°C ± 10°C when using lead solder, and within 3 seconds, at a solder iron tip temperature of 350°C ± 10°C when using lead-free solder.

Since the Counter is not flux-tight, do not use flux when soldering.

Avoid automatic and dip soldering. Manually solder the Counter onto a PC board, and avoid cleaning as much as possible.

When mounting the Counter on a PC board with components which consume higher current than the H7E□-N□P, observe the following precautions.

1. Minimize the wiring (less than 50 mm) from the H7E□-N□P to the power supply section.
2. Avoid placing the H7E□-N□P power, timer, counter, or reset input circuit in parallel with circuits that consume large currents, particularly on the positive side.

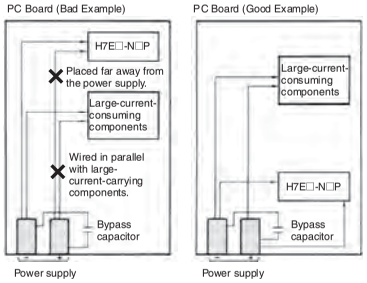

When using the Counter in an environment where the Counter is subject to frequent occurrences of vibration or shock, or when mounting the Counter facing downwards or sideways, it is suggested that the Counter be directly soldered to a PCB instead of using sockets.

To Conform to EN/IEC Standards

Input terminals have no insulation from power supply terminals. The power supply terminals must be supplied from a SELV source in accordance with IEC61010-1 Annex H. SELV (separated extra-low voltage) source is a power supply having double or reinforced insulation between the primary and the secondary circuit and having output voltage of 30 V rms max. and 42.4 V peak max. or 60 VDC max.

Cleaning

To prevent damage, the exterior of the Counter must not be exposed to organic solvents (3.g. paint thinner or benzine), strong alkalis, or strong acids.

Others

- No user-serviceable parts.
- Return to OMRON for all repairs.

ALL DIMENSIONS SHOWN ARE IN MILLIMETERS.
To convert millimeters into inches, multiply by 0.03937. To convert grams into ounces, multiply by 0.03527.

In the interest of product improvement, specifications are subject to change without notice.

Read and Understand This Catalog

Please read and understand this catalog before purchasing the products. Please consult your OMRON representative if you have any questions or comments.

Warranty and Limitations of Liability

WARRANTY

OMRON's exclusive warranty is that the products are free from defects in materials and workmanship for a period of one year (or other period if specified) from date of sale by OMRON.

OMRON MAKES NO WARRANTY OR REPRESENTATION, EXPRESS OR IMPLIED, REGARDING NON-INFRINGEMENT, MERCHANTABILITY, OR FITNESS FOR PARTICULAR PURPOSE OF THE PRODUCTS. ANY BUYER OR USER ACKNOWLEDGES THAT THE BUYER OR USER ALONE HAS DETERMINED THAT THE PRODUCTS WILL SUITABLY MEET THE REQUIREMENTS OF THEIR INTENDED USE. OMRON DISCLAIMS ALL OTHER WARRANTIES, EXPRESS OR IMPLIED.

LIMITATIONS OF LIABILITY

OMRON SHALL NOT BE RESPONSIBLE FOR SPECIAL, INDIRECT, OR CONSEQUENTIAL DAMAGES, LOSS OF PROFITS OR COMMERCIAL LOSS IN ANY WAY CONNECTED WITH THE PRODUCTS, WHETHER SUCH CLAIM IS BASED ON CONTRACT, WARRANTY, NEGLIGENCE, OR STRICT LIABILITY.

In no event shall the responsibility of OMRON for any act exceed the individual price of the product on which liability is asserted.

IN NO EVENT SHALL OMRON BE RESPONSIBLE FOR WARRANTY, REPAIR, OR OTHER CLAIMS REGARDING THE PRODUCTS UNLESS OMRON'S ANALYSIS CONFIRMS THAT THE PRODUCTS WERE PROPERLY HANDLED, STORED, INSTALLED, AND MAINTAINED AND NOT SUBJECT TO CONTAMINATION, ABUSE, MISUSE, OR INAPPROPRIATE MODIFICATION OR REPAIR.

Application Considerations

SUITABILITY FOR USE

OMRON shall not be responsible for conformity with any standards, codes, or regulations that apply to the combination of products in the customer's application or use of the products.

At the customer's request, OMRON will provide applicable third party certification documents identifying ratings and limitations of use that apply to the products. This information by itself is not sufficient for a complete determination of the suitability of the products in combination with the end product, machine, system, or other application or use.

The following are some examples of applications for which particular attention must be given. This is not intended to be an exhaustive list of all possible uses of the products, nor is it intended to imply that the uses listed may be suitable for the products:

- Outdoor use, uses involving potential chemical contamination or electrical interference, or conditions or uses not described in this catalog.
- Nuclear energy control systems, combustion systems, railroad systems, aviation systems, medical equipment, amusement machines, vehicles, safety equipment, and installations subject to separate industry or government regulations.
- Systems, machines, and equipment that could present a risk to life or property.

Please know and observe all prohibitions of use applicable to the products.

NEVER USE THE PRODUCTS FOR AN APPLICATION INVOLVING SERIOUS RISK TO LIFE OR PROPERTY WITHOUT ENSURING THAT THE SYSTEM AS A WHOLE HAS BEEN DESIGNED TO ADDRESS THE RISKS, AND THAT THE OMRON PRODUCTS ARE PROPERLY RATED AND INSTALLED FOR THE INTENDED USE WITHIN THE OVERALL EQUIPMENT OR SYSTEM.

PROGRAMMABLE PRODUCTS

OMRON shall not be responsible for the user's programming of a programmable product, or any consequence thereof.

Disclaimers

CHANGE IN SPECIFICATIONS

Product specifications and accessories may be changed at any time based on improvements and other reasons.

It is our practice to change model numbers when published ratings or features are changed, or when significant construction changes are made. However, some specifications of the products may be changed without any notice. When in doubt, special model numbers may be assigned to fix or establish key specifications for your application on your request. Please consult with your OMRON representative at any time to confirm actual specifications of purchased products.

DIMENSIONS AND WEIGHTS

Dimensions and weights are nominal and are not to be used for manufacturing purposes, even when tolerances are shown.

PERFORMANCE DATA

Performance data given in this catalog is provided as a guide for the user in determining suitability and does not constitute a warranty. It may represent the result of OMRON's test conditions, and the users must correlate it to actual application requirements. Actual performance is subject to the OMRON Warranty and Limitations of Liability.

ERRORS AND OMISSIONS

The information in this document has been carefully checked and is believed to be accurate; however, no responsibility is assumed for clerical, typographical, or proofreading errors, or omissions.

2010.6

In the interest of product improvement, specifications are subject to change without notice.

OMRON Corporation
Industrial Automation Company

http://www.ia.omron.com/

(c)Copyright OMRON Corporation 2010 All Right Reserved.

Omron: Relay – MK2EP-UA-AC120

OMRON®

General Purpose Relay

MK

- Exceptionally reliable general purpose relay
- Long life (minimum 100,000 electrical operations) assured by silver contacts
- Built-in operation indicator (mechanical, LED), diode surge suppression, Varistor surge suppression
- The contact operation can be easily checked by mechanical indicator and/or push-to-test button options
- Conforms to CENELEC standards
- VDE approved versions available

Ordering Information

To Order: Select the part number and add the desired coil voltage rating (e.g., MK3P5-S-*AC120*).

Type	Terminal	Coil	Contact form	Part number: Mechanical indicator	Part number: Mechanical indicator & push-to-test button
Standard	Plug-in	AC/DC	DPDT	**MK2P-I**	**MK2P-S**
			3PDT	**MK3P-5-I**	**MK3P-5-S**
LED indicator			DPDT	**MK2PN-I**	**MK2PN-S**
			3PDT	**MK3PN-5-I**	**MK3PN-5-S**
LED indicator and diode		DC	DPDT	**MK2PND-I**	**MK2PND-S**
			3PDT	**MK3PND-5-I**	**MK3PND-5-S**
LED indicator and varistor		AC	DPDT	**MK2PNV-I**	**MK2PNV-S**
			3PDT	**MK3PNV-5-I**	**MK3PNV-5-S**
Diode		DC	DPDT	**MK2PD-I**	**MK2PD-S**
			3PDT	**MK3PD-5-I**	**MK3PD-5-S**
Varistor		AC	DPDT	**MK2PV-I**	**MK2PV-S**
			3PDT	**MK3PV-5-I**	**MK3PV-5-S**

Note: 1. Reverse polarity versions available on DC coil types. Consult your OMRON representative for further information.
2. VDE approved versions are available. Consult your OMRON representative for further information.

■ ACCESSORIES (Order separately)

To Order: Select the appropriate part numbers for sockets, clips, and mounting tracks (if required) from the available types chart.

Track mounted sockets

Relay type	Part number: Socket	Part number: Relay hold-down clip	Part number: Mounting track/end plate
SPDT DPDT	**PF083A-E**	**PFC-A1**	**PFP-100N** or **PFP-50N** and **PFP-M** (end plate)
3PDT	**PF113A-E**	**PFC-A1**	**PFP-100N** or **PFP-50N** and **PFP-M** (end plate)

■ ACCESSORIES (continued)

Back connecting sockets

Relay type	Part number	
	Socket	Relay hold-down clip
SPDT DPDT	**PL08**	**PLC-E**
	PLE08-0	**PLC-10**
	PL08-Q	**PLC-E**
3PDT	**PL11**	**PLC-E**
	PLE11-0	**PLC-10**
	PL11-Q	**PLC-E**

Specifications

■ CONTACT DATA

Load	Resistive load (p.f. = 1)		Inductive load (p.f. = 0.4)
	2 Pole	3 Pole	
Rated load	10 A at 250 VAC 10 A at 28 VDC	10 A at 120 VAC 10 A at 28 VDC 10 A at 250 VAC	7 A at 250 VAC
Contact material	Ag		
Carry current	10 A		
Max. operating voltage	250 VAC, 250 VDC		
Max. operating current	10 A		
Max. switching capacity	2,500 VA 280 W	2,500 VA/1,250 VA (NO/NC contacts) 280 W	1,750 VA
Min. permissible load	10 mA at 1 VDC		

■ COIL DATA

AC

Rated voltage (VAC)	Rated current (mA) (at 60 Hz)	Coil resistance (Ω)	Coil inductance (Ref. value) (H)		Pick-up voltage	Dropout voltage	Maximum voltage	Power consumption (mW)
			Armature OFF	Armature ON	% of rated voltage			
6	360	3.9	0.0423	0.0201	80% max. Approx. 2.7 VA	30% min. (at 60 Hz) 25% min. (at 50 Hz)	110% max.	Approx. 2.3 VA (at 60 Hz) Approx. 2.7 VA (at 50 Hz)
12	180	16.3	0.3270	0.1666				
24	88.0	68.0	0.6940	0.3760				
50	39.0	338	3.195	1.530				
110	21.0	1240	13.45	7.32				
120	18.0	1578	15.04	7.19				
220	11.0	5090	49.73	27.02				
240	9.2	6737	58.62	32.07				

DC

Rated voltage (VDC)	Rated current (mA) (at 60 Hz)	Coil resistance (Ω)	Coil inductance (Ref. value) (H)		Pick-up voltage	Dropout voltage	Maximum voltage	Power consumption (mW)
			Armature OFF	Armature ON	% of rated voltage			
6	255	23.5	0.206	0.106	80% max. Approx. 2.7 VA	15% min.	110% max.	Approx. 1.5 W
12	126	95	0.963	0.449				
24	56	430	4.915	2.478				
48	29.5	1630	16.685	10.487				
110	15.1	7300	80.2	42.6				

Note:
1. The rated current and coil resistance are measured at a coil temperature of 23°C (73°F) with a tolerance of ±15% for DC rated current and +15%, -20% for AC rated current.
2. The rated current is reference value.
3. Performance characteristic data are measured at a coil temperature of 23°C (73°F).
4. For models with the LED indicator built-in, add an LED current of approximately 0 thru 5 mA to the rated current.

■ CHARACTERISTICS

Contact resistance		50 mΩ max.
Operate time		AC: 20 ms max. DC: 30 ms max.
Release time		20 ms max.
Operating frequency	Mechanical	18,000 operations/hour
	Electrical	1,800 operations/hour (under rated load)
Insulation resistance		100 MΩ min. (at 500 VDC)
Dielectric strength		2,500 VAC, 50/60 Hz for 1 minute between coil and contacts 1,000 VAC, 50/60 Hz for 1 minute between contacts of same poles, between terminals of the same polarity 2,500 VAC, 50/60 Hz for 1 minute between current-carrying parts, noncurrent-carrying parts, and terminals of opposite polarity
Vibration	Mechanical durability	10 to 55 Hz, 1.50 mm (0.06 in) double amplitude
	Malfunction durability	10 to 55 Hz, 1.00 mm (0.04 in) double amplitude
Shock	Mechanical durability	1,000 m/s^2 (approx. 100 G)
	Malfunction durability	100 m/s^2 (approx. 10 G)
Ambient temperature		Operation: -10° to 40°C (14° to 104°F)
Humidity		35 to 85% RH
Service Life	Mechanical	10 million operations min. (at operating frequency of 18,000 operations/hour)
	Electrical	100,000 operations at rated load (at operating frequency of 1,800 operations/hour)
Weight		Approx. 0.85 g (3.0 oz)

Note: Data shown are of initial value.

■ CHARACTERISTIC DATA

Maximum switching capacity
MK2P-S, MK3P5-S

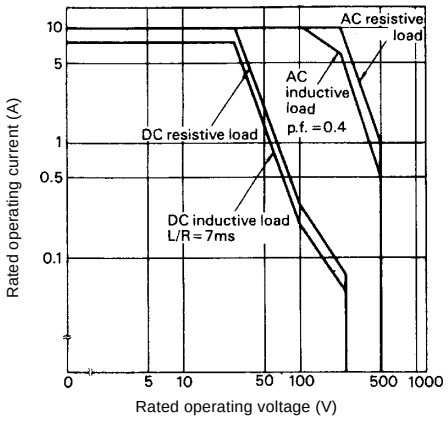

Electrical service life
MK2P-S, MK3P5-S

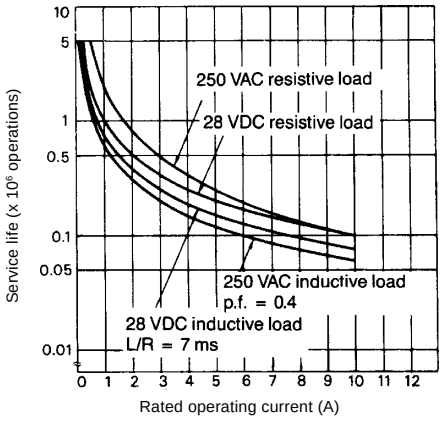

Dimensions

Unit: mm (inch)

■ RELAYS

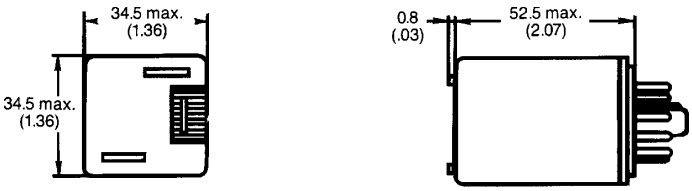

■ TERMINAL ARRANGEMENT (Bottom view)

Standard type (AC/DC coil)
MK2P-I, S

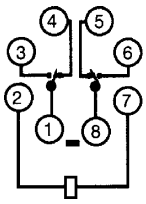

MK3P5-I, -S

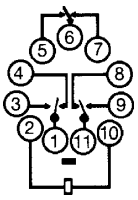

LED indicator type (AC coil)
MK2PN-I, -S

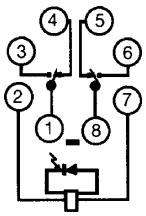

MK3PN-5-I, -S

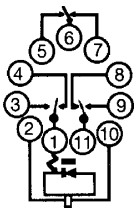

LED indicator type (DC coil)
MK2PN-I, -S

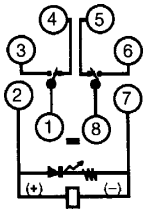

MK3PN-5-I, -S

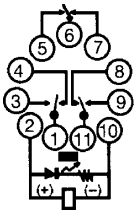

Diode type (DC coil)
MK2PD-I, -S

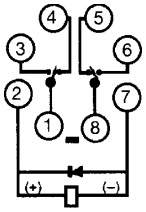

MK3PD-5-I, -S

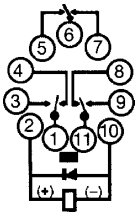

Varistor type (AC coil)
MK2PV-I, -S

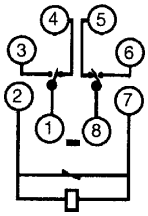

MK3PV-5-I, -S

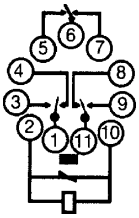

LED indicator and diode type (DC coil)
MK2PND-I, -S

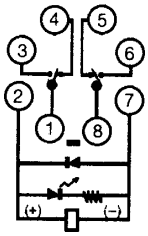

MK3PND-5-I, -S

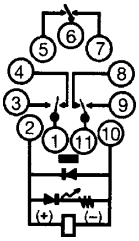

LED indicator and Varistor type (AC coil)
MK2PNV-I, -S

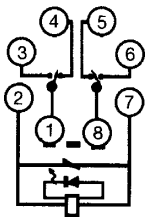

MK3PNV-5-I, -S

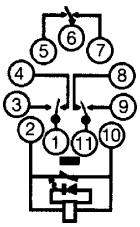

■ ACCESSORIES

Track mounted socket
PF083A-E (conforming to DIN EN 50022)

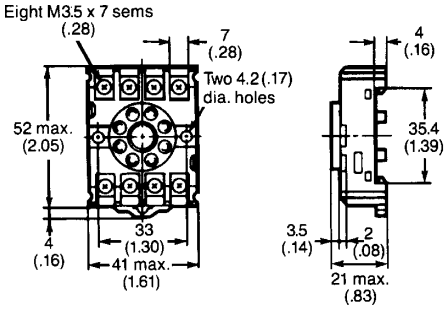

Terminal arrangement

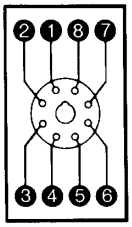

Mounting holes

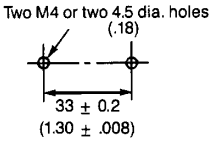

Mounting dimensions of relay with socket

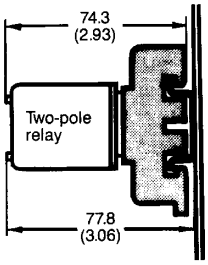

Note: Model PF083A-E can be used as a front connecting socket.

Track mounted socket
PF113A-E (conforming to DIN EN 50022)

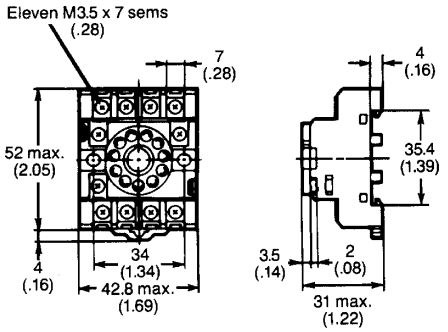

Terminal arrangement

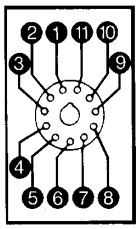

Mounting holes

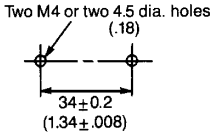

Mounting dimensions of relay with socket

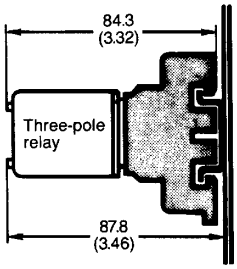

Note: Model PF113A-E can be used as a front connecting socket.

Back connecting socket
MK2 sockets (8 pin)

PL08 (UL File No. E87929)
Solder terminals

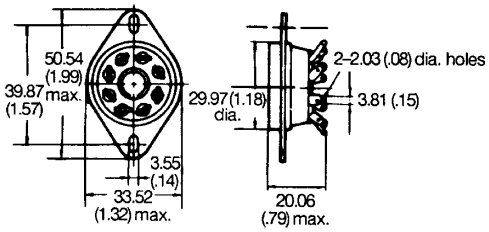

PL08-Q
Wire wrap terminals

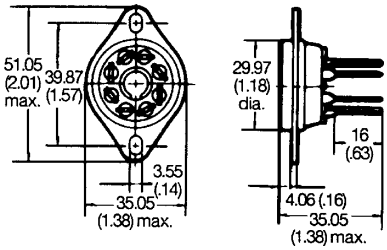

Printed circuit board socket
PLE08-0

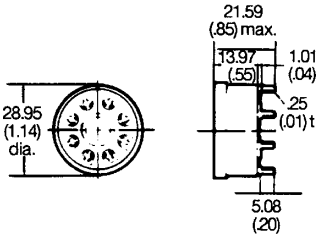

Mounting holes
PL08

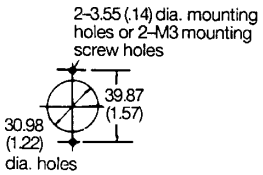

Mounting holes and panel cut-out applies to PL08 and PL08-Q

PL08 type sockets and MK2 relay
Total height dimension

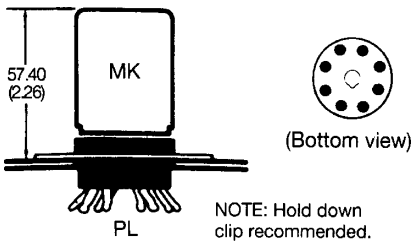

NOTE: Hold down clip recommended.

Recommended PCB layout
PLE08-0

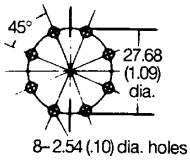

Unit: mm (inch)

■ ACCESSORIES (continued)

Back connecting socket
MK3 sockets (11 pin)

PL11 (UL File No. E87929)
Solder terminals

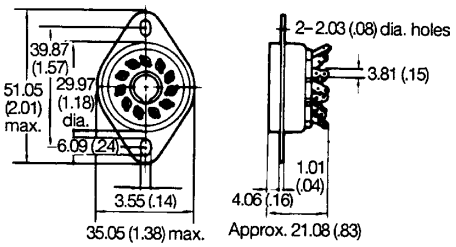

PL11-Q
Wire wrap terminals

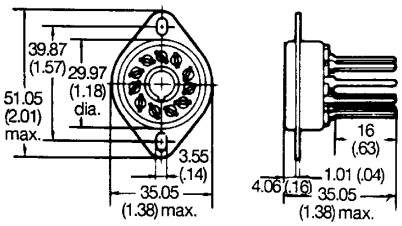

Printed circuit board socket
PLE11-0

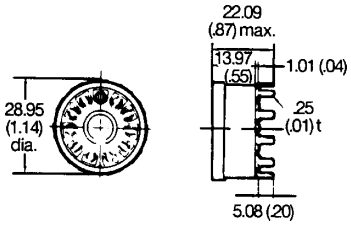

Mounting holes
PL11

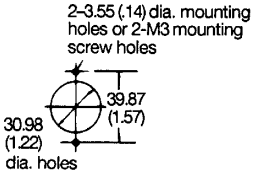

Mounting holes and panel cut-out applies to PL11 and PL11-Q

PL11 type sockets and MK3 relay
Total height dimension

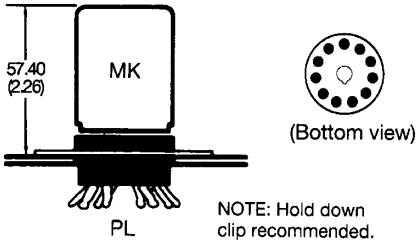

Recommended PCB layout
PLE11-0

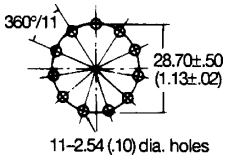

Mounting tracks

PFP-100N/PFP-50N
(conforming to DIN EN 500022)

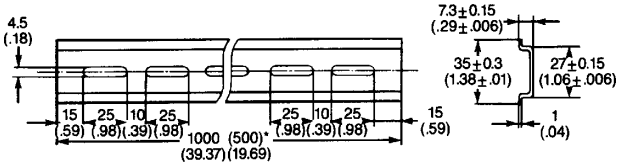

PFP-100N2
(conforming to DIN EN 500022)

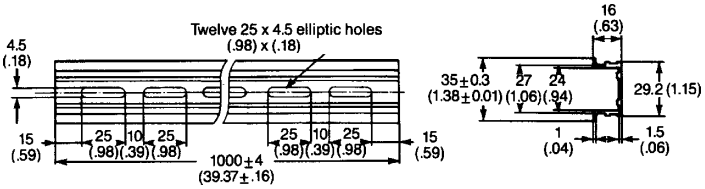

Note: 1. *This dimension applies to mounting track PFP-50N.
2. A total of twelve 25 x 4.50 mm (0.98 x 0.18 in) elliptic holes is provided with six holes cut from each rail end at a pitch of 10 mm (0.39 in) holes.

PFP-M end plate

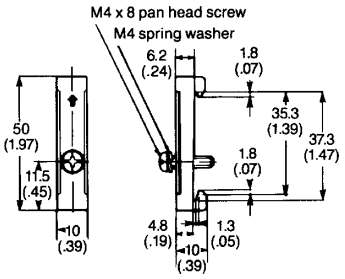

Note: Use of Type PFP-M end plate is recommended to secure the socket on the mounting track. Be sure that the engraved arrow mark on the surface of the end plate faces upward and then tighten the screw firmly with a screwdriver.

■ APPROVALS

UL (File No. E41515)/CSA (File Nos. LR41408 and LR335535)

Type	Contact form	Coil ratings	Contact ratings
MK2P-I, -S	DPDT	6 to 250 VAC 6 to 110 VDC	10 A, 250 VAC, Resistive
			10 A, 28 VDC, Resistive
			7 A, 250 VAC, Inductive
MK3P5-I, -S	3PDT	6 to 250 VAC 6 to 110 VDC	10 A, 120 VAC, Resistive
			10 A, 28 VDC, Resistive
			10 A, 250 VAC, Resistive
			7 A, 250 VAC, Inductive

SEV, DEMKO

Type	Contact form	Coil ratings	Contact ratings
MK2P-I, -S	DPDT	6 to 110 VDC	10 A, 250 VAC (NO) (cosø = 1)
			5 A, 250 VAC (NC) (cosø = 1)
			10 A, 280 VDC (NO)
MK3P5-I, -S	3PDT	6 to 240 VAC	5 A, 280 VDC (NC)
			7 A, 250 VAC (cosø = 0.4)

TUV (File No. R9051410)

Type	Contact form	Coil ratings	Contact ratings
MK2P-I, -S	DPDT	6, 12, 24, 48, 100, 110 VDC	10 A, 250 VAC (NO) (cosø = 1)
			5 A, 250 VAC (NC) (cosø = 1)
			10 A, 280 VDC (NO)
MK3P5-I, -S	3PDT	6, 12, 24, 50, 110, 115, 120, 200, 220, 230, 240 VAC	5 A, 280 VDC (NC)
			7 A, 250 VAC (cosø = 0.4)

Note: 1. The rated values approved by each of the safety standards (e.g., UL and CSA) may be different from the performance characteristics individually defined in this catalog.
2. VDE, Nemko and Semko versions are available. Please consult your OMRON representative for further information.
3. In the interest of product improvement, specifications are subject to change.

OMRON

OMRON ELECTRONICS, INC.
One East Commerce Drive
Schaumburg, IL 60173
1-800-55-OMRON

OMRON CANADA, INC.
885 Milner Avenue
Scarborough, Ontario M1B 5V8
416-286-6465

Cat. No. GC RLY6 9/97 Specifications subject to change without notice. Printed in the U.S.A.

Durant-Eaton: Cycle Counter (water & product pumps) – 53300400

Durant®

INSTALLATION AND OPERATION MANUAL NUMBER 53300-900-08

Courier Models: 53300-400 Totalizer
53300-401 Totalizer, Extended Temperature Range
53302-400 Totalizer with Backlight

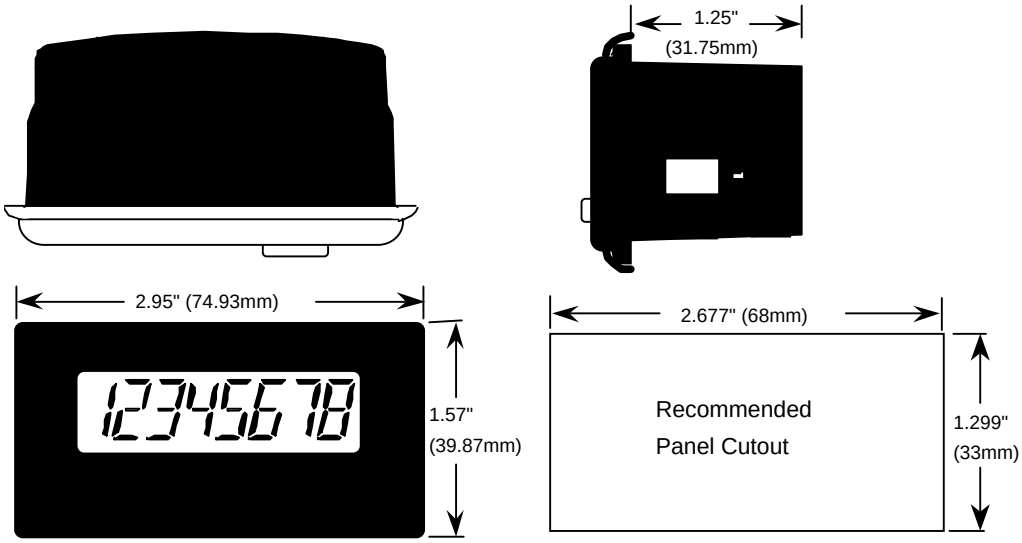

POWER

Internal Battery: 3V, Lithium.
Life expectancy: 5 years +.
Replacement Part: 36367-202.

BACKLIGHT

10-30 VDC @ 30 mA max.
(Derate operating temperature 1°C/Volt above 17VDC.)
Reverse polarity protected.

PHYSICAL

Operating Temperature: -20° to 70°C.
Storage Temperature: -20° to 70°C.
Operating Humidity: 60% Non-condensing.
Weight: 2.2 oz. net.
Display Size: .43" high.
Front Panel Rating: NEMA 4X when mounted with gasket provided.
Case Material: Cycolac X-17.

TOTALIZER

Type: UP counting.
Digits: 8

COUNT ACCURACY

100% when operated within specifications.

DC COMMON (Terminal 1)

COUNT INPUTS

Input B (Terminal 2) Low speed input designed for contact closures to DC common.

Speed: 0 to 20 Hz.
Min Low Time: 10 milliseconds.
Min High Time: 40 milliseconds.
Impedance: 101K ohm.
Voltage Thresholds: Low 0 to 0.4 VDC.
High 2.0 to 28 VDC.
Max High 28 VDC.

Input A (Terminal 3) High speed input requiring a voltage source such as a current sourcing sensor or a current sinking sensor used with the provided pull up resistors.

Speed: 0 to 10 kHz.
Min Low Time: 80 microseconds.
Min High Time: 20 microseconds.
(The above times are with a 0 to 5.0 V swing.)
Input Impedance: 2ký above 5 VDC.
Voltage Thresholds: Low 0 to 1.2 VDC.
High 2.0 to 28 VDC.
Max High 28 VDC.

RESET INPUT (Terminal 4) designed for contact closures to DC common.

Min. Low: 0.25 to 1 sec. (reset is maintained).
The required pulse width varies with count speed, scale factor and number of digits displayed.
Voltage Thresholds: Low 0 to 0.4 VDC.
High 2.0 to 28 VDC.

FRONT PANEL RESET ENABLE (Terminal 5)

Operation: Level sensitive (maintained).

INTRODUCTION

Your 5330X-400 is an UP counting totalizer with a high-contrast eight-digit LCD display. The front-panel reset key can be disabled. A remote-reset terminal is provided.

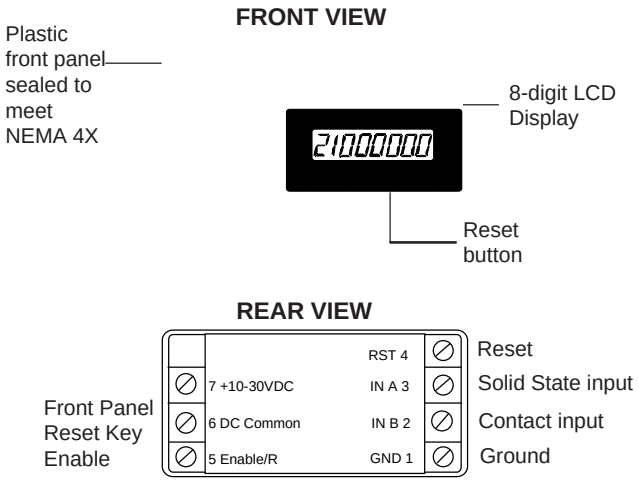

APPLICATIONS

This totalizer is intended for simple totalizing applications. One count input pulse per item is necessary. The only decisions to be made are:

1. Do you use the high or low speed input?

2. Do you want the front panel reset button active?

OPERATION

The totalizer display has lead-zero blanking. No decimal point is available.

MOUNTING

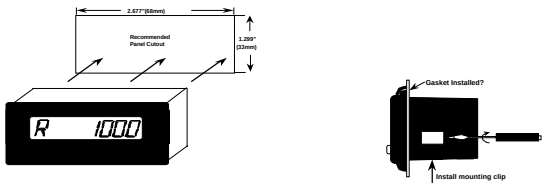

Count Inputs

Separate contact and solid state count inputs are provided. The solid state input (terminal 3) requires a current-sourcing sensor and can count up to 10 kHz. Inputs into this terminal are counted on the positive-going edge.

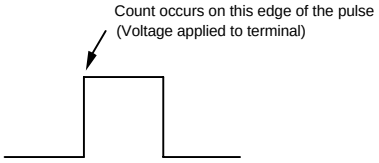

Terminal 3 is pulled down to common. When a sensor output supplies voltage to this terminal, one count is registered on the display. The sourcing signal must supply at least +1.0VDC but no more than +28VDC.

Note: When a sourcing signal is applied to terminal 3, a power assist feature of the Courier extends the life of the battery.

Terminal 2 is the low-speed, current-sinking count input designed to be used with a contact closure to ground. It has a maximum count speed of 20 Hz. Inputs into this terminal are counted on the negative-going edge.

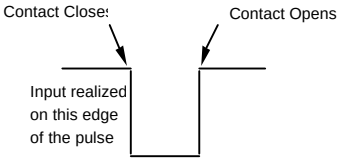

Terminal 2 is pulled up to +3VDC. When a contact closes, pulling the voltage down to .4 VDC or less, one count is registered.

RUN MODE

Screens

The totalizer screen is the only screen available on this model.

Front Panel Reset Enable

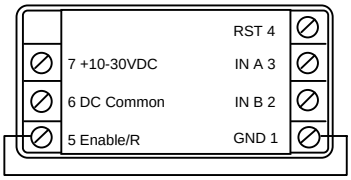

The front-panel reset button comes disabled from the factory. To enable the button, install a jumper wire from terminal 5 to ground, terminal 1.

Note: The reset terminal on the rear panel is still active when the front reset button is disabled.

PROGRAM MODE

There is no program mode for this model.

WIRING RECOMMENDATIONS

Following these suggestions will increase noise immunity and extend the life of the product.

Cable: The connection between the count source and the totalizer should be made with a two-conductor shielded cable. The shield should be connected to earth ground at one end only. The connecting cable should not be run in conduits with cables switching high inductive loads.

Relay Coil Suppression: If a relay contact is used as a count source, the relay coil should be suppressed. This can be accomplished with an RC network for AC coils or a diode for DC coils. The Durant RC suppressor (38091-400) may be used.

Mounting: The totalizer should not be mounted near a solenoid or other inductive devices. Enough ventilation should be supplied to keep the totalizer operating within the temperature specifications.

BATTERY SAFETY

The lithium battery that powers your device contains inflammable materials such as lithium organic solvent, and other chemical ingredients. Explosion or fire may result if the battery is not handled correctly. To avoid an accident follow these guidelines:

* Do not stack or jumble up batteries.
* Do not heat batteries above 95°C.
* Do not disassemble batteries.
* Do not recharge lithium batteries.
* Do not apply pressure to, or deform batteries.
* Do not solder to batteries.
* Do not dispose of batteries in fire.
* Insert battery with correct polarity.

Terminal	Function	Operation
1	Ground	
2	Input B Count Input	Use with Contact Closure to Ground Maximum 20 Hz Count Speed
3	Input A Count Input	Use with Current Sourcing Sensor Maximum 10 kHz Count Speed
4	Reset	Connect to Ground to Reset Totalizer. This is a maintained or Level Sensitive Reset
5	Reset Key Enable	Connect to Ground to Enable Reset Key
6	Backlight Common	
7	Backlight Power	Connect to Power to Light Display

WIRING DIAGRAMS

CONTACT CLOSURE COUNT INPUT

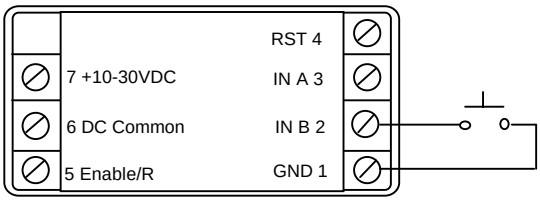

SOLID STATE COUNT INPUT
CURRENT SOURCING SENSOR

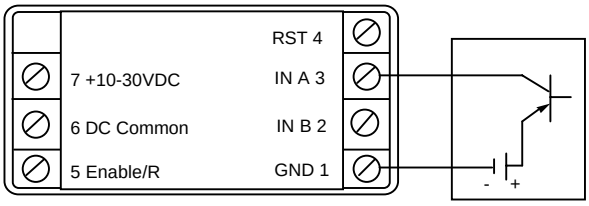

SOLID STATE INPUT
CURRENT SINKING SENSOR

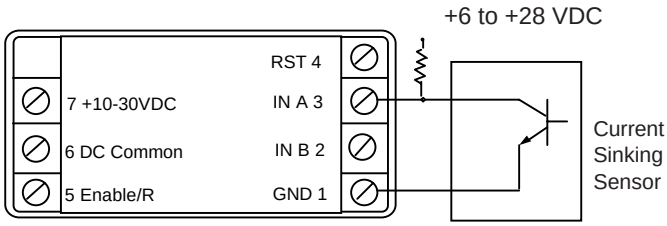

REMOTE RESET

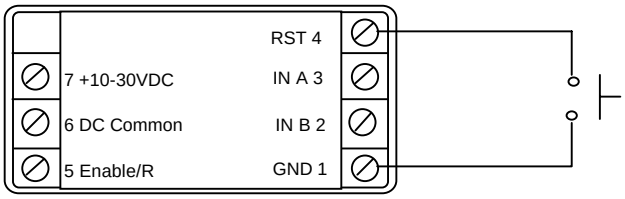

FRONT PANEL RESET ENABLE & BACKLIGHT WIRING

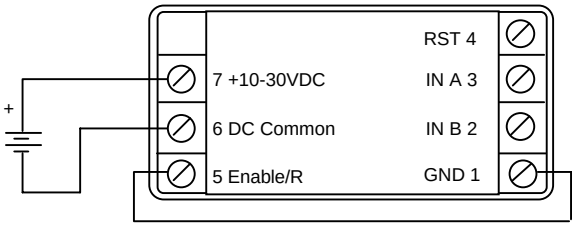

REPLACEMENT PARTS

36367-202	Battery
46066-210	Gasket
53300-241	Mounting Clip
28772-200	Mounting Screw

COURIER SERIES ACCESSORIES

ES9513-RS	Rotary Contactor
49750-400	Power Supply (+15VDC)
38091-400	Count Source RC Suppressor

Devices requiring external power for correct operation

48770-401, -402	Inductive Proximity Sensor (8mm, 12mm, 18mm)
48771-400	Diffuse-Reflective Photoelectric Sensor
48771-401	Retro-Reflective Photoelectric Sensor
48771-402	Thru-Beam Photoelectric Sensor Emitter
48771-404	Thru-Beam Photoelectric Sensor Receiver (Thru-beam emitter and receiver must be used together)
38150-XXX	Standard Duty, Single Channel Shaft Encoder (XXX denotes pulses per revolution. Example: 38150-060 for 60 pulses/rev)
48370-XXX	Heavy Duty, Single Channel Shaft Encoder (XXX denotes pulses per revolution. Example: 48370-060 for 60 pulses/rev)

OTHER COURIER SERIES PRODUCTS

53300-401	Add/Subtract Totalizer (Solid State Inputs)
53300-402	Add/Subtract Totalizer (Contact Inputs)
53300-403	Quadrature Indicator/Totalizer
53300-404	Ratemeter
53300-405	Ratemeter/Totalizer
53302-401	Add/Subtract Totalizer w/Backlight (Solid State Inputs)
53302-402	Add/Subtract Totalizer w/Backlight (Contact Inputs)
53302-403	Quadrature Indicator/Totalizer w/Backlight
53302-404	Ratemeter w/Backlight
53302-405	Totalizer/Ratemeter w/Backlight

WARRANTY: Eaton warrants all products against defects in material and workmanship for a period of one (1) year from the date of shipment to Buyer. This is a limited warranty limited to its terms. This warranty is void if the product has been altered, misused, taken apart or otherwise abused. ALL OTHER WARRANTIES, EXPRESS OR IMPLIED, ARE EXCLUDED, INCLUDING BUT NOT LIMITED TO THE IMPLIED WARRANTIES OF MERCHANTABILITY AND FITNESS FOR PURPOSE.

BUYERS' REMEDIES: Eaton's obligations and liabilities under the foregoing warranty are limited to repair or replacement of the product without charge. To receive the required Return Goods Authorization number (RGA), contact your local Durant distributor or call 1-800-540-9242 to get a list of distributors in your area. A charge is made for repairing after the expiration of the warranty. IN NO EVENT SHALL EATON BE LIABLE FOR CLAIMS BASED UPON BREACH OF EXPRESS OR IMPLIED WARRANTY OR NEGLIGENCE OR ANY OTHER DAMAGES WHETHER DIRECT, IMMEDIATE, FORESEEABLE, CONSEQUENTIAL OR SPECIAL OR FOR ANY EXPENSES INCURRED BY REASON OF THE USE OR MISUSE, SALE OR FABRICATION OF PRODUCTS WHICH DO OR DO NOT CONFORM TO THE TERMS AND CONDITIONS OF THIS CONTRACT.

INDEMNIFICATION: Buyer agrees to hold Eaton harmless from, defend, and indemnify Eaton against damages, claims and expenses arising out of subsequent sales of Durant products or products containing components manufactured by Eaton and based upon personal injuries, deaths, property damage, lost profits, and other matters for which Buyer, its employees or subcontractors are or may be to any extent liable, including without limitation penalties imposed by the Consumer Product Safety Act (P.L.92-573) and liability imposed upon any person pursuant to the Magnuson-Moss Warranty Act (P.L.93.637), as now in effect or as amended hereafter. The warranties and remedies provided for herein are available to Buyer and shall not extend to any other person.

COMPLIANCE WITH OSHA: Eaton offers no warranty and makes no representation that its products comply with the provisions or standards of the Occupational Safety and Health Act of 1970, or any regulations issued thereunder. In no event shall Eaton be liable for any loss, damages, fines, penalty or expense arising under said ACT.

This manual constitutes proprietary information of Eaton Corp., and is furnished for the customers' use in operating the Courier. Reproduction of this material for purposes other than the support of the Ambassador Series Control or related products is prohibited without the prior written consent of Eaton Corp., Watertown, WI.

In the construction of the Control described herein, the full intent of the specifications will be met. Eaton Corp., however reserves the right to make, from time to time and without proper written notice, such departures from the detail specifications as may be required to permit improvements in the design of the product.

The information included herein is believed to be accurate and reliable, however no responsibility is assumed by Eaton Corp., for its use; nor for any infringements of patents or other rights of third parties which may result from its use.

This equipment is capable of generating radio frequency energy. If not installed and used in accordance with the instructions, this unit may interfere with radio communications.

Durant
901 South 12th Street
Watertown, WI 53094
800-540-9242 • 920-261-4070
FAX 920-261-9097

APPENDIX F
Water and Product Flow Monitoring Equipment Manuals

McCrometer:
Flow Meter – M0306 & M0304

Mc Propeller Meter

Mc Propeller Flowmeters

Installation, Operation & Maintenance Manual

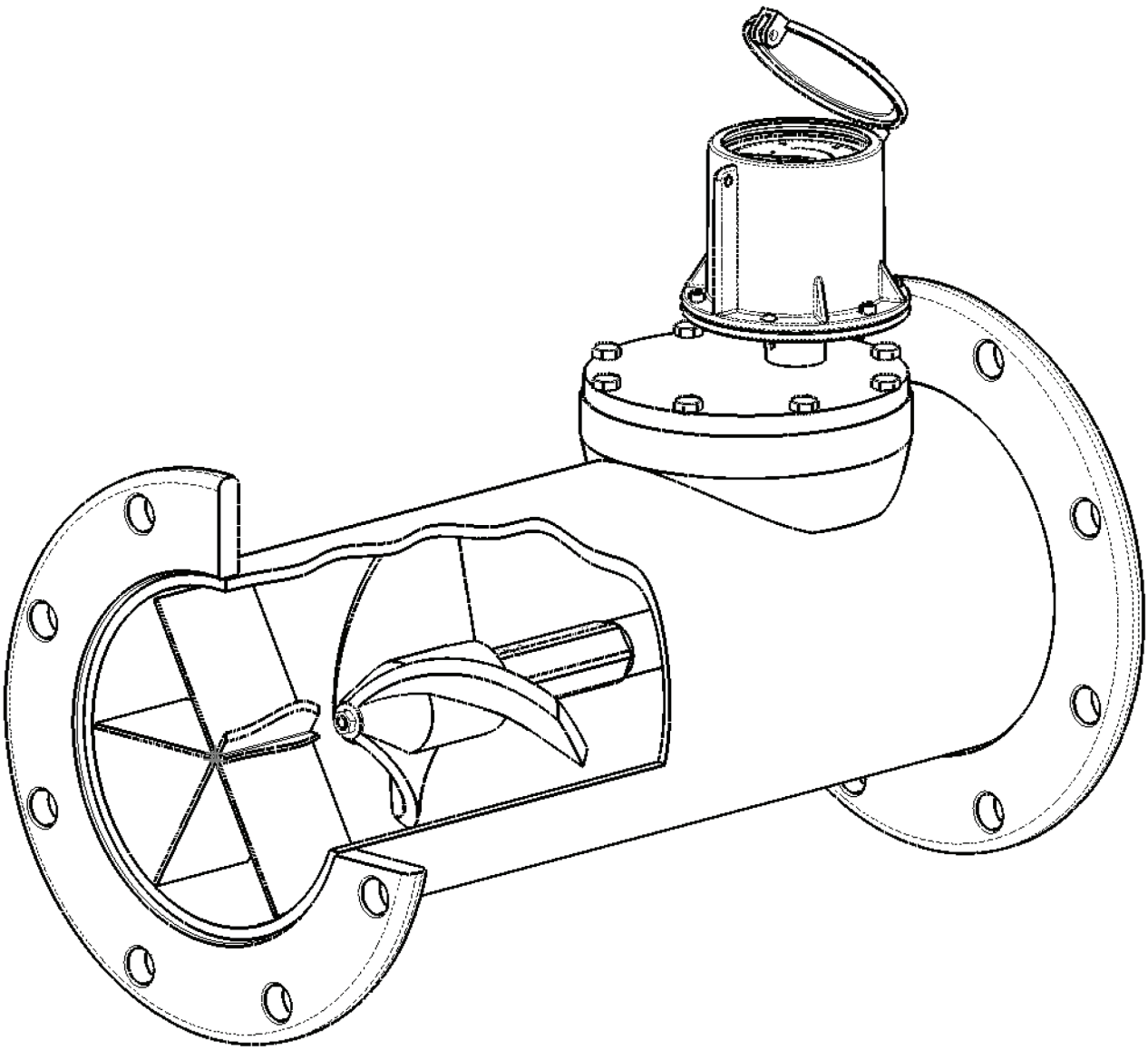

McCROMETER

TABLE OF CONTENTS

WARRANTY **1**

1.0 INTRODUCTION **2**
- 1.1 MODEL TYPES 2
- 1.2 TYPICAL INSTALLATIONS 2

2.0 SPECIFICATIONS **3**
- 2.1 GENERAL SPECIFICATIONS 3
- 2.2 HOW TO READ A TOTALIZER 3
- 2.3 UNDERSTANDING THE REGISTER GEAR RATION 4
- 2.4 ACCURACY 5
- 2.5 HEADLOSS 5

3.0 INSTALLATION INSTRUCTIONS **6**
- 3.1 SAFETY 6
- 3.2 PIPE RUN REQUIREMENTS 6
- 3.3 STRAIGHTENING VANES 7
- 3.4 OTHER INSTALLATION CONSIDERATIONS 7
- 3.5 FLOW DIRECTION 8

4.0 METER CONSTRUCTION **8**
- 4.1 COMMON PARTS 8
- 4.2 PROPELLER 9
- 4.3 BEARING ASSEMBLY 9
- 4.4 DRIVE ASSEMBLY 10
- 4.5 METERHEAD 10
- 4.6 REGISTER EXTENSION 11

5.0 MAINTENANCE AND TROUBLESHOOTING **12**
- 5.1 OCCASIONAL INSPECTIONS 12
- 5.2 TOOLS LIST 12
- 5.3 DISASSEMBLY AND INSPECTION PROCEDURE 13
- 5.4 ORDERING REPLACEMENT PARTS 14
- 5.5 REASSEMBLY PROCEDURE 15

6.0 TECHNICAL SPECIFICATIONS **15**

TECHNICAL SUPPORT **15**

METER MODEL DRAWINGS **16**
- MF100, MG100, MS100. MT100 2” - 3” 16
- MF100, MZ100, MZ200, MG100, MS100, MT104, MT106 4” - 24” 17
- ML100 18
- M0300 19
- M0300SW 20
- M0304 21
- MQ/QW500, MG900, MT900, MW900 2” - 3” 22
- MW500, MW600, MG/MW900, MT904, MT906 4” - 24” 23
- MZ500 24
- QW500 25
- M1104 26
- M1400 27
- M1708 THROUGH M1736 28
- MM803 THROUGH MM816 29
- MW803 THROUGH MW824 30

WARRANTY

This Warranty shall apply to and be limited to the original purchaser consumer of any McCrometer product. Meters or instruments defective because of faulty material or workmanship will be repaired or replaced, at the option of McCrometer Inc., free of charge, FOB the factory in Hemet, California, within a period of one (1) year from the date of delivery.
Repairs or modifications by others than McCrometer Inc. or their authorized representatives shall render this Warranty null and void in the event that factory examination reveals that such repair or modification was detrimental to the meter or instrument. Any deviations from the factory calibration require notification in writing to McCrometer Inc. of such recalibrations or this Warranty shall be voided.

In case of a claim under this Warranty, the claimant is instructed to contact McCrometer Inc., 3255 W. Stetson Ave., Hemet, California 92545, and to provide an identification or description of the meter or instrument, the date of delivery, and the nature of the problem.

The Warranty provided above is the only Warranty made by McCrometer Inc. with respect to its products or any parts thereof and is made expressly in lieu of any other warranties, by course of dealing, usages of trade or otherwise, expressed or implied, including but not limited to any implied warranties of fitness for any particular purpose or of merchantability under the uniform commercial code. It is agreed this Warranty is in lieu of and buyer hereby waives all other warranties, guarantees or liabilities arising by law or otherwise. Seller shall not incur any other obligations or liabilities or be liable to buyer, or any customer of buyer for any anticipated or lost profits, incidental or consequential damages, or any other losses or expenses incurred by reason of the purchase, installation, repair, use or misuse by buyer or third parties of its products (including any parts repaired or replaced); and seller does not authorize any person to assume for seller any other liability in connection with the products or parts thereof. This Warranty cannot be extended, altered or varied except by a written instrument signed by seller and buyer.

This Warranty gives you specific legal rights, and you may also have other rights which vary from state to state.

McCrometer Inc. reserves the right to make improvements and repairs on product components which are beyond the Warranty period at the manufacturer's option and expense, without obligation to renew the expired Warranty on the components or on the entire unit. Due to the rapid advancement of meter design technology, McCrometer Inc. reserves the right to make improvements in design and material without prior notice to the trade.

All sales and all agreement in relation to sales shall be deemed made at the manufacturer's place of business in Hemet, California and any dispute arising from any sale or agreement shall be interpreted under the laws of the State of California

McCROMETER
www.mccrometer.com

3255 WEST STETSON AVENUE • HEMET, CALIFORNIA 92545 USA
TEL: 951-652-6811 • 800-220-2279 • FAX: 951-652-3078 Printed In The U.S.A Lit. # 24517-11 Rev. 3.4/02-09

Copyright © 1997-2009 McCrometer, Inc. All printed material should not be changed or altered without permission of McCrometer. Any published technical data and instructions are subject to change without notice. Contact your McCrometer representative for current technical data and instructions.

1.0 INTRODUCTION

Propeller flowmeters are widely accepted as a proven technology for measuring flow with high accuracy and excellent repeatability. McCrometer Inc. produces propeller flowmeters used around the world for agricultural, municipal, and industrial applications. Typical Mc Propeller Flowmeter configurations are shown in Figure: 1 below.

1.1 MODEL TYPES

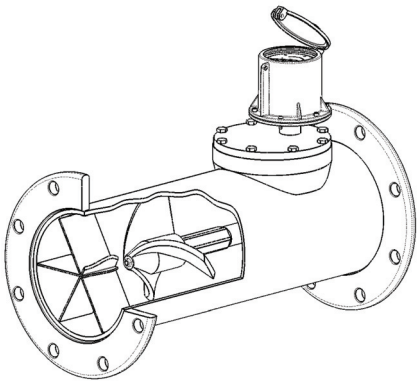

Removeable Top-Plate - MZ500 Shown

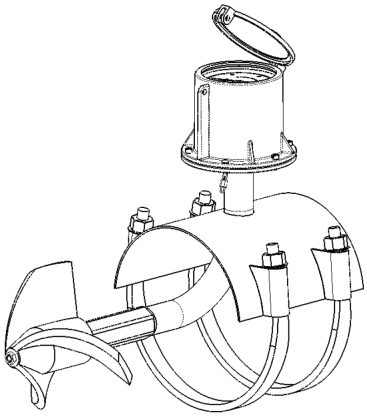

Saddle Type - M0300 Shown

Open Flow - M1700 Shown

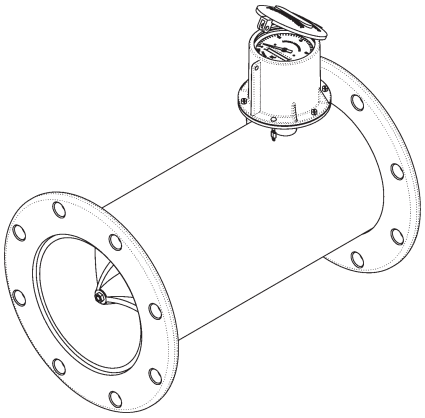

Fixed Ell - MF100 Shown

Figure: 1 Typical Mc Propeller Flowmeter Configurations

1.2 TYPICAL APPLICATIONS

- Sprinkler irrigation systems
- Center pivot systems
- Farm turnouts from irrigation districts
- Drip irrigation systems
- Golf course and park management
- Remote indication, totalizing, & recording
- Commercial nurseries
- Multi-stage pump actuation and control
- Raw water intake
- Water and wastewater management
- Plant effluent
- Valve actuation and control
- Return activated sludge
- Hot water & petroleum mixtures
- Process batching & chemical feed

McCROMETER
www.mccrometer.com
3255 WEST STETSON AVENUE • HEMET, CALIFORNIA 92545 USA
TEL: 951-652-6811 • 800-220-2279 • FAX: 951-652-3078
Printed In The U.S.A Lit. # 24517-11 Rev. 3.4/02-09

Copyright © 1997-2009 McCrometer, Inc. All printed material should not be changed or altered without permission of McCrometer. Any published technical data and instructions are subject to change without notice. Contact your McCrometer representative for current technical data and instructions.

2.0 SPECIFICATIONS

The measuring element of a propeller flowmeter consists of a rotating device, called a rotor or propeller. Positioned in the center of the flowstream, the propeller rotates at a rate proportional to the velocity of the fluid through the flowmeter. This rotation can be transmitted mechanically to a register assembly and the fluid's volumetric flowrate and accumulated volume can then be displayed.

2.1 GENERAL SPECIFICATIONS

DESCRIPTIONS:

TURNDOWN: Propeller meters are specified to work within a certain range of flowrates. Turndown is the ratio of the maximum flowrate to the minimum flowrate of the meter. A typical turndown of an 8" meter is 15:1. (e.g., max. flow = 1500 gpm to min. flow = 100 gpm)

ACCURACY: Accuracy shows how close the measurement of the meter is to the actual flow in the pipe. Within its turndown (described above), the reading of the meter is guaranteed to be ±2% of the actual flow.

SIZES AVAILABLE	2" to 96"
FLOWRATES AVAILABLE	40 to 75,000 GPM
TURNDOWN	up to 15:1
ACCURACY	±2%
REPEATABILITY	±0.25%
RATED PRESSURE	150 PSI
RATED TEMPERATURE	160° F

REPEATABILITY: Flowmeter repeatability is the ability of a meter to reproduce a measurement under similar conditions. This is not by itself a measure of accuracy, but rather a component of the meter's total accuracy. McCrometer propeller meters have a repeatability of ±0.25%.

PRESSURE: The pressure rating for standard propeller meters is 150 PSI. This pressure rating refers to the constant line pressure in the pipe. Some models can be rated up to 300 PSI. Higher pressures are available on special request.

TEMPERATURE: The temperature rating for standard propeller meters is 160 °F constant temperature. This temperature rating refers to fluid temperature. Most standard models can be upgraded to 180° F constant temperature on special request.

2.2 HOW TO READ A TOTALIZER

The following guidelines should be helpful for reading totalizers on Mc Propeller flowmeters:

Most totalizers have "multipliers". Multipliers are always a multiple or fraction of ten which are used to multiply the direct reading of the totalizer. For example, an eight inch meter that totalizes in gallons will have a multiplier of times 100, see Figure 2. That means that the last digit on the right of the six digit totalizer is not gallons, but hundreds of gallons. In this example, the correct reading is 500 gallons.

The same eight inch meter totalizing in acre feet will have a multiplier of 0.001, see Figure 3. In this case, "X .001" is printed below the totalizer. The three digit counters on the right side are colored yellow to indicate a decimal point should be placed between the third and fourth digit when reading the totalizer. In this example, the correct reading is 5.555 Acre Feet. When reading a totalizer care must be taken to add the correct amount of zeroes or place the decimal point in the right place. If a mistake is made, the meter reading can be off by a factor of 10, 100, or even 1000 units.

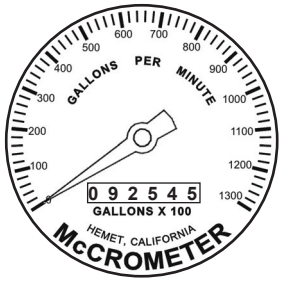

Figure 2: Totalizer In Gallons

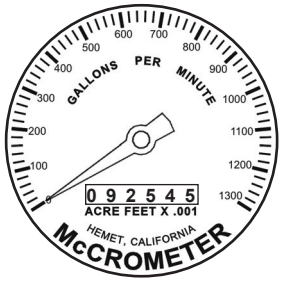

Figure 3: Totalizer In Acre Feet

McCROMETER
www.mccrometer.com
3255 WEST STETSON AVENUE • HEMET, CALIFORNIA 92545 USA
TEL: 951-652-6811 • 800-220-2279 • FAX: 951-652-3078
Printed In The U.S.A Lit. # 24517-11 Rev. 3.4/02-09

Copyright © 1997-2009 McCrometer, Inc. All printed material should not be changed or altered without permission of McCrometer. Any published technical data and instructions are subject to change without notice. Contact your McCrometer representative for current technical data and instructions.

2.3 UNDERSTANDING THE REGISTER GEAR RATIO

Each register has a gear ratio that is matched to the propeller. For instance, consider an 8" McCrometer meter totalizing in gallons. A standard 8" meter will have a gear ratio of 400:1, which means the propeller must rotate 400 times for the first odometer wheel to turn one complete revolution. This first odometer wheel usually symbolizes a certain multiple of the totalizing units, called a multiplier. Since the totalizer on the 8" meter has a multiplier of times 100 (signified by two zeros to the right of the odometer wheels), each number on the first odometer wheel represents one hundred gallons. Therefore, one complete rotation of the first odometer wheel is ten times one hundred gallons, or 1000 gallons. So remembering the gear ratio for this example is 400 propeller revolutions to one full turn of the odometer wheel, 400 propeller revolutions equals 1000 gallons.

Example: Standard 8" meter: 400 propeller rev. = 1 rev. of odometer wheel = 1000 gallons

***NOTE* Each line size has its own gear ratio. Registers from different size meters cannot be interchanged freely.** Be sure you know your meter's gear ratio and multiplier for reference.

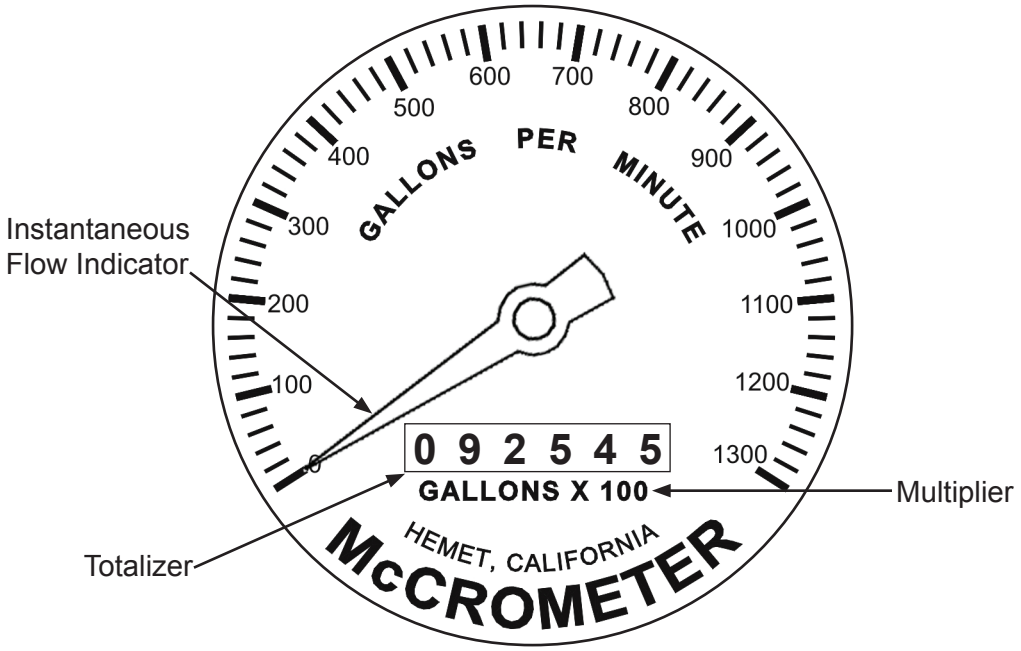

Figure: 4 Typical Dial Face

McCROMETER
www.mccrometer.com
3255 WEST STETSON AVENUE • HEMET, CALIFORNIA 92545 USA
TEL: 951-652-6811 • 800-220-2279 • FAX: 951-652-3078
Printed In The U.S.A Lit. # 24517-11 Rev. 3.4/02-09

Copyright © 1997-2009 McCrometer, Inc. All printed material should not be changed or altered without permission of McCrometer. Any published technical data and instructions are subject to change without notice. Contact your McCrometer representative for current technical data and instructions.

2.4 ACCURACY

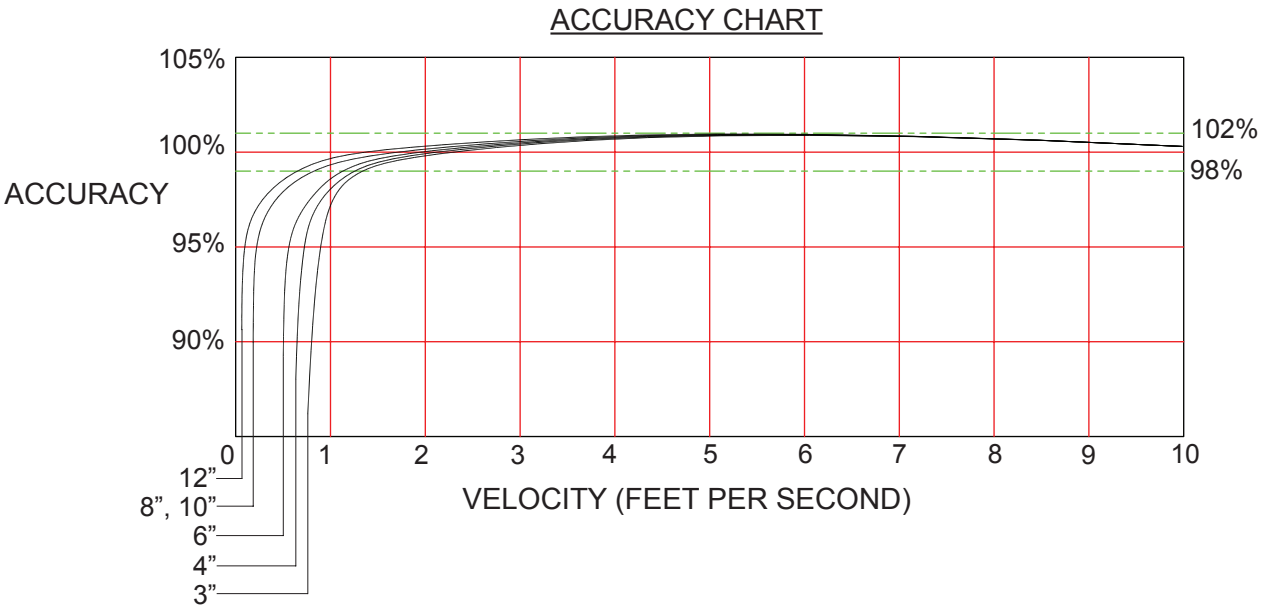

Standard flowrates for McCrometer propeller meters are shown below. Readings are guaranteed accurate within ±2% in these flowrates. Please note that over 80 percent of the meter's flow range, the accuracy is better than ±1%.

Nominal Meter Size	2”	2.5”	3”	4”	6”	8”	10”	12”	14”	16”	18”	20”	24”
Minimum Flow(U.S.GPM)	40	40	40	50	90	100	125	150	250	275	400	475	700
Maximum Flow(U.S.GPM)	250	250	250	600	1200	1500	1800	2500	3000	4000	5000	6000	8500
Dial Face Range	250	250	250	800	1300	2500	3000	4000	6000	8000	10000	10000	15000

2.5 HEADLOSS

Headloss refers to the fluid pressure lost due to the meter. Propeller meters have very low permanent headloss as seen in the chart below.

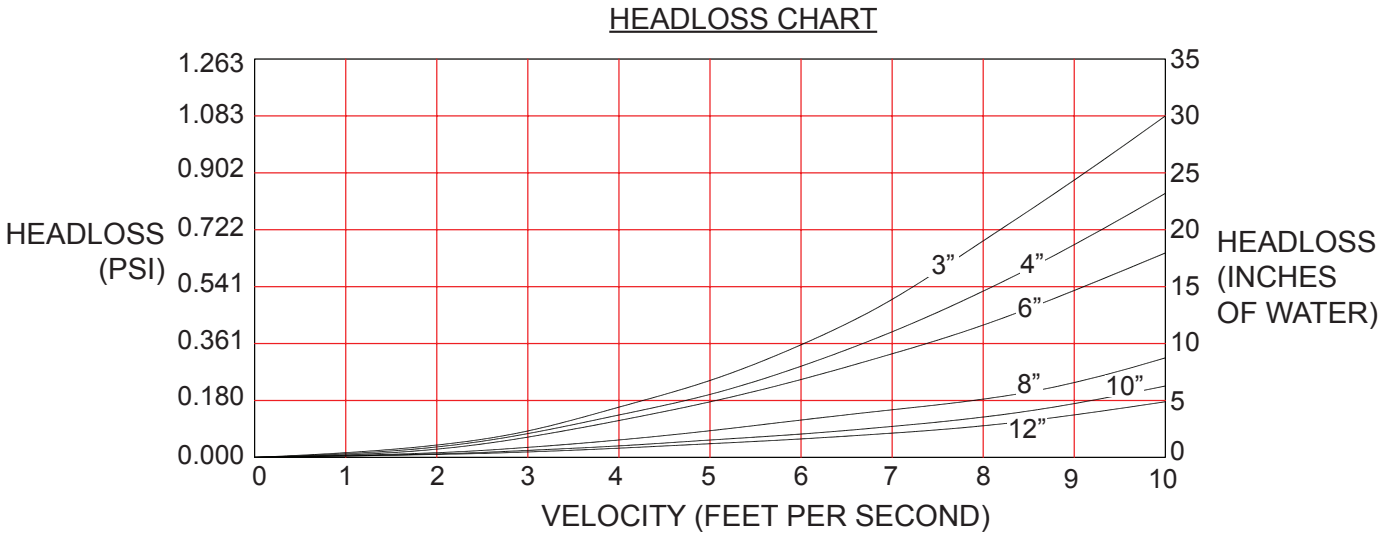

Nominal Meter Size	3”	4”	6”	8”	10”	12”	14”	16”	18”	20”	24”
Max. Headloss (in. H_20 column)	30	23	17	7	4	3	2	2	2	1	1

McCROMETER
www.mccrometer.com
3255 WEST STETSON AVENUE • HEMET, CALIFORNIA 92545 USA
TEL: 951-652-6811 • 800-220-2279 • FAX: 951-652-3078
Printed In The U.S.A Lit. # 24517-11 Rev. 3.4/02-09

Copyright © 1997-2009 McCrometer, Inc. All printed material should not be changed or altered without permission of McCrometer. Any published technical data and instructions are subject to change without notice. Contact your McCrometer representative for current technical data and instructions.

3.0 INSTALLATION INSTRUCTIONS

Proper meter installation is the first step to ensure excellent meter performance. Follow these instructions closely. Consult an authorized service representative or the factory for any circumstances encountered which are not covered in this manual.

All McCrometer products are tested and inspected during manufacture and prior to shipping. An inspection should be performed at the time of unpacking to detect any damage that might have occurred during shipment.

3.1 SAFETY

- Any person installing, inspecting, or maintaining a McCrometer flowmeter should have a working understanding of piping configurations and systems under pressure.
- Before adjusting or removing any meter, be certain the system has depressurized completely.

⚠ NEVER ATTEMPT TO REMOVE A METER WHILE THE LINE IS UNDER PRESSURE!

- Be careful when lifting meters. Meters can cause serious injury if lifted incorrectly or dropped.
- Only necessary and appropriate tools should be used when working on a meter. For tools list see page 11.
- Before starting a system, make sure all connections are properly secured. Keep a safe and prudent distance away from the meter during system start-up.

3.2 PIPE RUN REQUIREMENTS

Flowmeters are velocity sensing devices and are vulnerable to certain upstream disturbances. Because of this, meters need certain lengths of straight pipe runs before and after the meter. These distances usually relate to the diameter of the pipe used. Obstructions can include elbows, valves, pumps, and changes in pipe diameter. The uneven flow created by these obstructions can vary with each system. If your application provides for more than five diameters of upstream run, use the available distance.

- Upstream Requirement: Mc Propeller meters should be installed a minimum of five to ten diameters downstream of any obstructions. See the tables below. The exact upstream piping requirements are specific to the meter model number.
- Downstream Requirement: The downstream run should be one to two diameters of straight pipe length after the meter.

For upstream and downstream piping requirements relating to your specific meter, contact your local McCrometer representative. (Please be prepared to provide the serial number of your meter.)

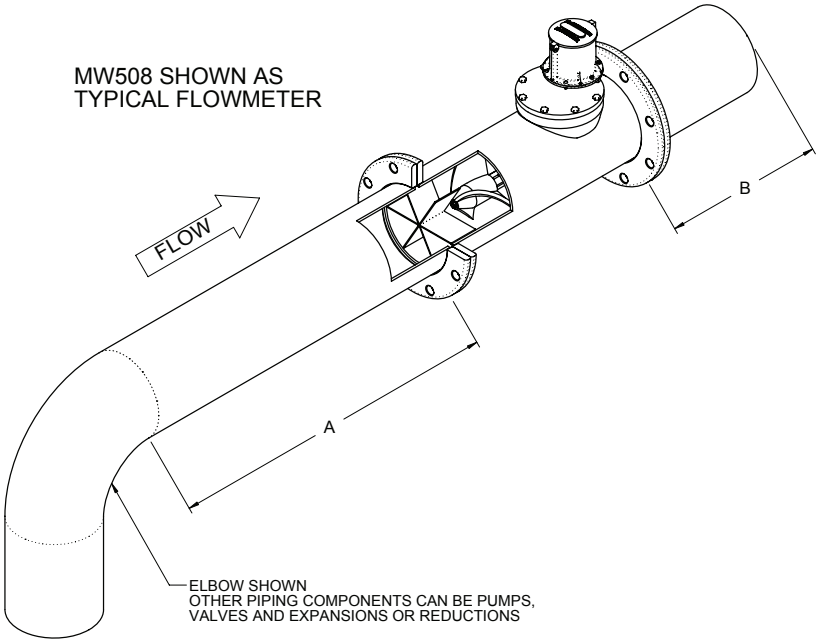

Meter	Configuration	A	B
MW500 MZ500	Without Flow Straightener	5	1
MW800 MG900	With FS100 Flow Straightener	1.5	1

Meter	Configuration	A	B
M0300 MF100 MT100	Without Straightening vanes	10	1
	With Straightening vanes	5	1
	With FS100 Flow Straightener	1.5	1

Figure: 5 Installation Requirements

McCROMETER
www.mccrometer.com
3255 WEST STETSON AVENUE • HEMET, CALIFORNIA 92545 USA
TEL: 951-652-6811 • 800-220-2279 • FAX: 951-652-3078
Printed In The U.S.A Lit. # 24517-11 Rev. 3.4/02-09

Copyright © 1997-2009 McCrometer, Inc. All printed material should not be changed or altered without permission of McCrometer. Any published technical data and instructions are subject to change without notice. Contact your McCrometer representative for current technical data and instructions.

3.3 STRAIGHTENING VANES

Special attention should be given to systems using two elbows “out of plane” or devices such as a centrifugal sand separator. These cause swirling flow in the line that affect propeller meters. Well developed swirls can travel up to 100 diameters downstream if unobstructed. Since most installations have less than 100 diameters to work with, straightening vanes become necessary to alleviate the problem. Straightening vanes will break up most swirls and ensure more accurate measurement. McCrometer’s mainline meters like the MW500 series have vanes included as a standard feature. If your model does not have straightening vanes (e.g., M0300 Bolt-On Saddle series), McCrometer actively encourages installing vanes just ahead of the meter. Straightening vanes are available in weld-in, bolt-in, and the FS100 Flow Straightener. For more information on vane installation, please visit www.mccrometer.com and download the following McCrometer documents:

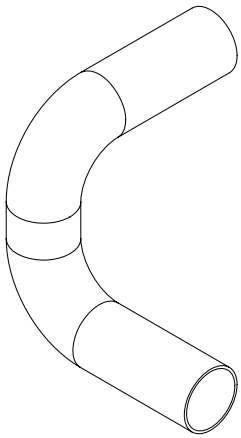

Figure: 6 Elbows Out Of Plane

- 24510-72 Installation Instructions For Bolt-In Vanes
- 24510-68 Mc SpaceSaver Configuration Sheet
- 24517-03 FS100 Flow Straightener Installation Instructions

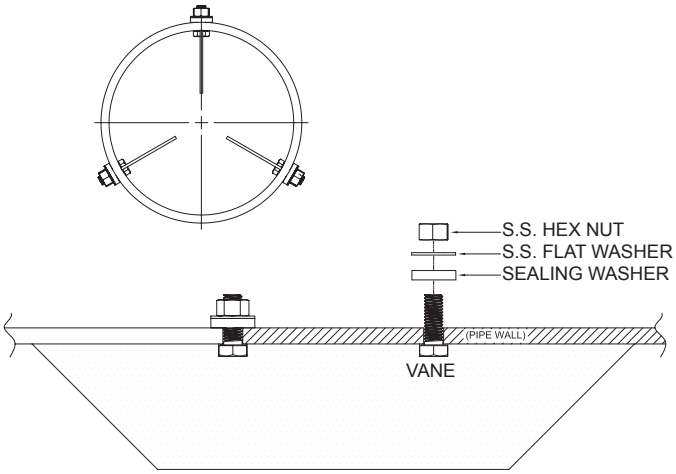

Figure: 7 Bolt In Straightening Vanes

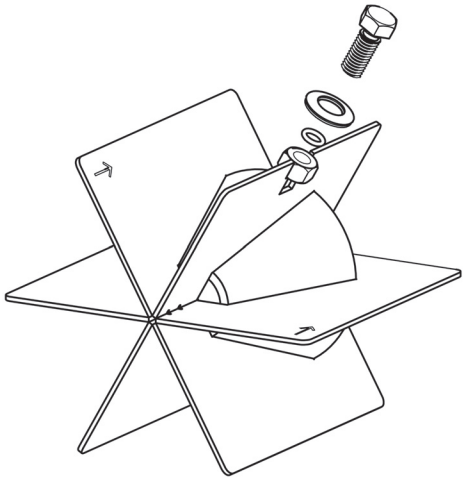

Figure: 8 FS100 Flow Straightener

3.4 OTHER INSTALLATION CONSIDERATIONS

- All propeller flowmeters are calibrated for a full pipeline only; if less, the flowmeter will over register the flow. Although a minimum line pressure is not necessary for an accurate measurement, a full pipe is necessary.
- Mc Propeller flowmeters can be mounted either horizontally or vertically. Mc Propeller flowmeters are calibrated for horizontal installation. Vertical mounting can offer some slight advantages due to gravity having a more pronounced flow conditioning effect in vertical lines. If the meter is to be mounted vertically, please notify the factory at time of order as the mechanical indicator needs to be calibrated for vertical installations.
- With the meter installed, check the rate-of-flow indicator indicator. It should be stable to the point that it can be easily read. Some indicator movement is normal due to variations in flow. Erratic movement of the indicator is normally caused by flow variations and the system should be checked. Drastic variations in flow can decrease meter accuracy. If you suspect a problem with the meter, please contact your local McCrometer representative.

McCROMETER
www.mccrometer.com
3255 WEST STETSON AVENUE • HEMET, CALIFORNIA 92545 USA
TEL: 951-652-6811 • 800-220-2279 • FAX: 951-652-3078
Printed In The U.S.A Lit. # 24517-11 Rev. 3.4/02-09

Copyright © 1997-2009 McCrometer, Inc. All printed material should not be changed or altered without permission of McCrometer. Any published technical data and instructions are subject to change without notice. Contact your McCrometer representative for current technical data and instructions.

3.5 FLOW DIRECTION

All McPropeller meters have a Flow Arrow displayed on the meter in an obvious location to indicate the direction of the fluid flow. This is to insure that a meter is not installed backwards.

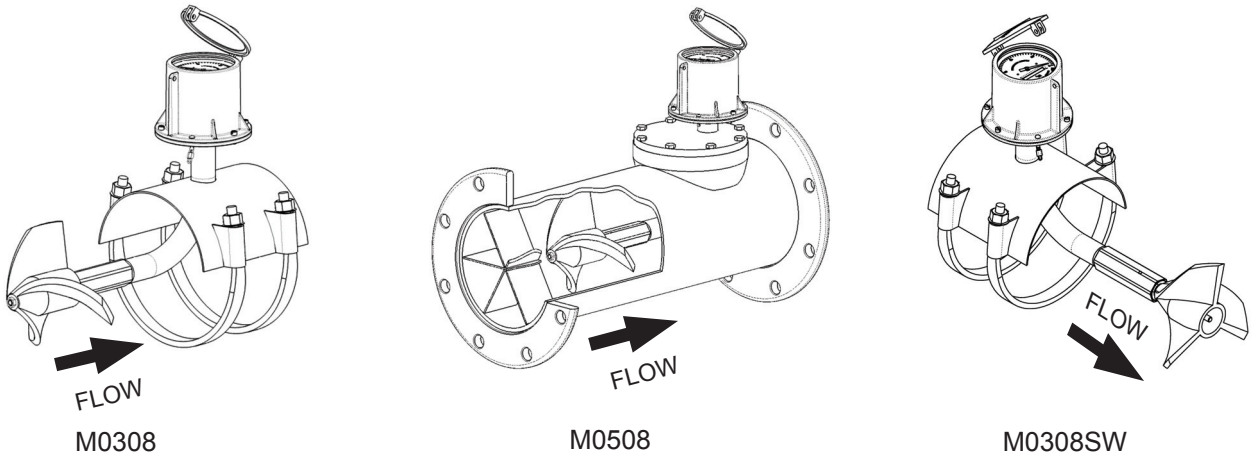

Figure: 9 McPropeller Meters With Indication Of Flow Direction

Special attention should be given to the installation direction of the Surface Water (SW) models of Mc Propeller meters, i.e. M0308SW. The M0300SW model meter is designed with the meter body turned 180 degrees from normal, a propeller installed nose-first on the bearing shaft, and a reverse flow style bearing assembly. This configuration allows the ell to curve with the flow, allowing grass or other debris to shed off with ease. Therefore, the proper installation of the M0300SW model meter appears “backwards”.

4.0 METER CONSTRUCTION

Every Mc Propeller Meter is constructed and assembled at the McCrometer factory. The Mc Propeller Meter design been refined and improved over past thirty years. Quality assurance at each step of the production process ensures every meter to be accurate and reliable for years of service.

4.1 COMMON PARTS

Mc Propeller Meters have a simple design with a limited number of moving parts. Figure 10 shows labeled parts that are commonly shared among models. These components are described in detail on the following pages.

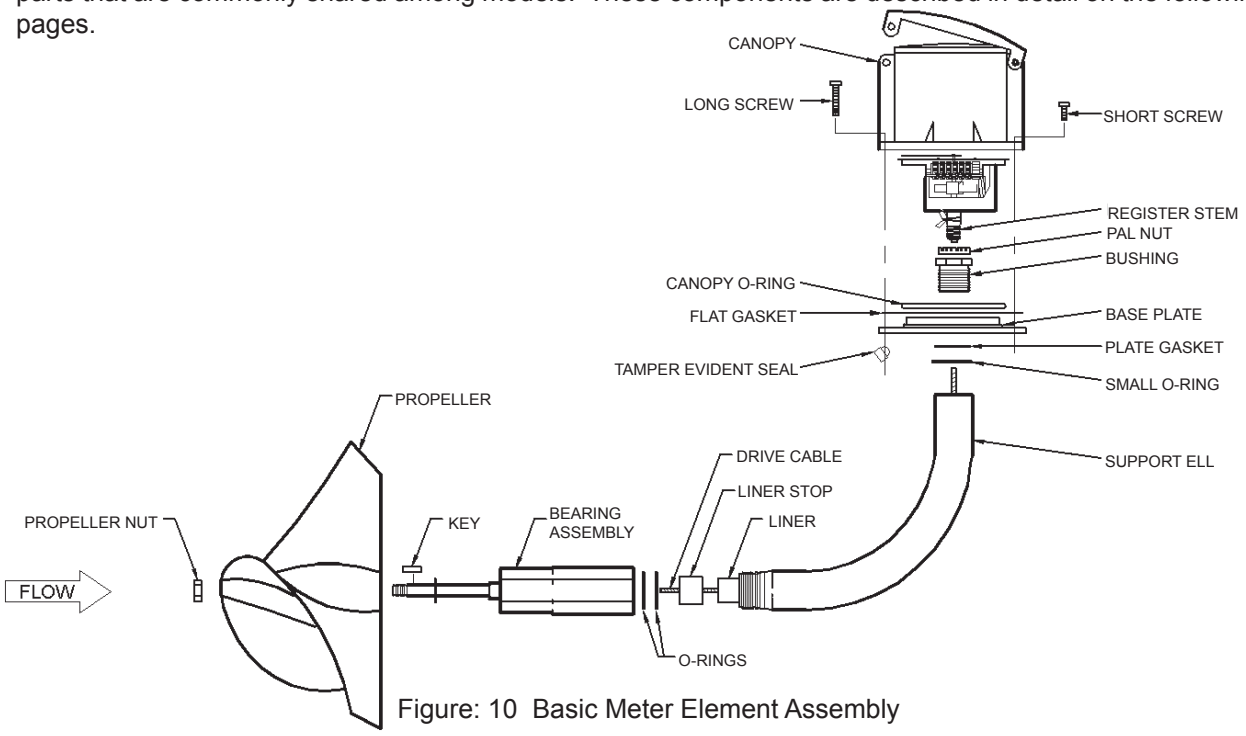

Figure: 10 Basic Meter Element Assembly

McCROMETER
www.mccrometer.com
3255 WEST STETSON AVENUE • HEMET, CALIFORNIA 92545 USA
TEL: 951-652-6811 • 800-220-2279 • FAX: 951-652-3078
Printed In The U.S.A Lit. # 24517-11 Rev. 3.4/02-09

Copyright © 1997-2009 McCrometer, Inc. All printed material should not be changed or altered without permission of McCrometer. Any published technical data and instructions are subject to change without notice. Contact your McCrometer representative for current technical data and instructions.

4.2 PROPELLER

The propeller is, of course, a very important part of any propeller meter. Mc Propeller flowmeter propellers have the following characteristics that ensure accurate readings:

- Each propeller is wet calibrated in a NIST (National Institute of Standards and Technology) traceable laboratory and trimmed so that a standard ratio is achieved. This allows for easy parts replacement in the field without recalibration.
- Propellers have a curved shape called the helical lead. The helical lead governs the rotational speed for a given flow velocity.
- Propellers are as light as possible so that the momentum of the fluid is large in relation to the mass of the propeller. As a result, lower flows can be measured and changes in velocity can be detected more rapidly.
- The propeller is sufficiently rigid to retain its shape during high flow conditions throughout the life of the meter.
- Propellers are large in relationship to the line size. This is necessary to affect the whole flow, which both averages the velocity profile and reduces inaccuracy.
- The propeller covers and protects the bearings to reduce debris and other fluid particles from entering the bearing assembly.

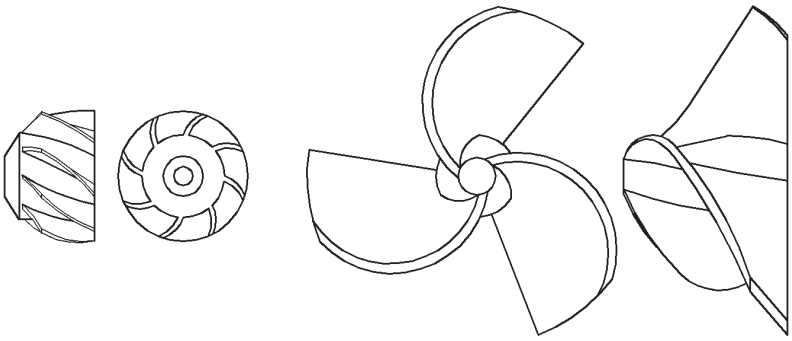

Figure: 11 Eight And Three Blade Propellers

4.3 BEARING ASSEMBLY

Two shielded stainless steel bearings support the propeller shaft and allow it to rotate freely. The propeller covers the bearings to help prevent loss of lubrication and entry of foreign particles found in the fluid. For higher than normal flows, a third over-run bearing can be added to the propeller shaft to increase the life of the meter.

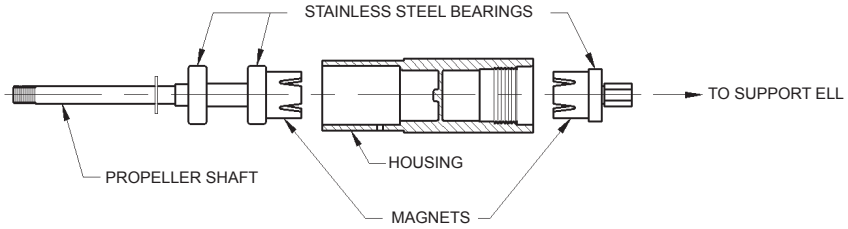

Note: The bearing assembly should not be disassembled.

Figure: 12 Bearing Assembly

The bearing assembly housing prevents the process fluid from entering the drive assembly. The housing is manufactured with an integral diaphragm separating the fore and aft sections. Two permanent magnets on either side of the diaphragm transmit the rotation of the propeller through the diaphragm, while preventing fluid from entering the aft chamber. This magnetic drive makes an excellent and frictionless seal. This connection also allows the magnets to slip if a sudden surge hits the propeller. This slippage protects the meterhead from excess torque. The bearing assembly threads onto the drive assembly support and seals with two O-rings.

McCROMETER
www.mccrometer.com
3255 WEST STETSON AVENUE • HEMET, CALIFORNIA 92545 USA
TEL: 951-652-6811 • 800-220-2279 • FAX: 951-652-3078
Printed In The U.S.A Lit. # 24517-11 Rev. 3.4/02-09

Copyright © 1997-2009 McCrometer, Inc. All printed material should not be changed or altered without permission of McCrometer. Any published technical data and instructions are subject to change without notice. Contact your McCrometer representative for current technical data and instructions.

4.4 DRIVE ASSEMBLY

The drive assembly supports the bearing assembly and propeller and transmits propeller revolutions to the meterhead. A heavy walled stainless steel pipe cold formed into an ell (90 degree) shape supports both the bearing assembly and the propeller. This ell holds a steel cable encased in a protective vinyl liner. The cable extends outside the liner to attach to the aft of the bearing assembly and the bottom of the meterhead to transmit the revolutions of the propeller to the register.

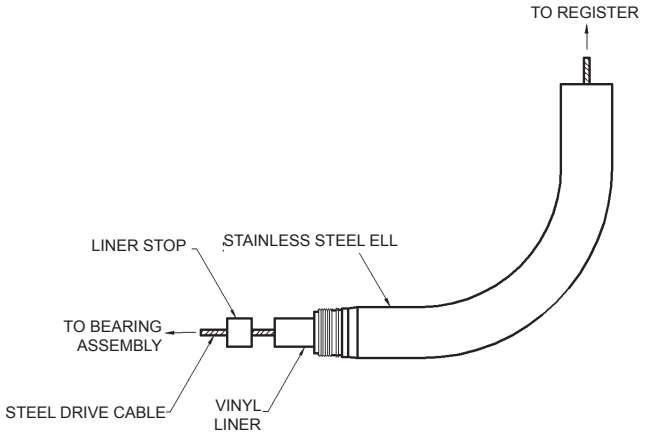

Figure: 13 Drive Assembly

4.5 METERHEAD

The meterhead consists of a register, canopy, and a base plate. The register transforms the speed of the propeller into both a totalizer and an instantaneous flow indicator. McCrometer's totalizers are six-digit, straight-reading type. Units of totalization include many standard units such as gallons, cubic feet, acre feet, and cubic meters.

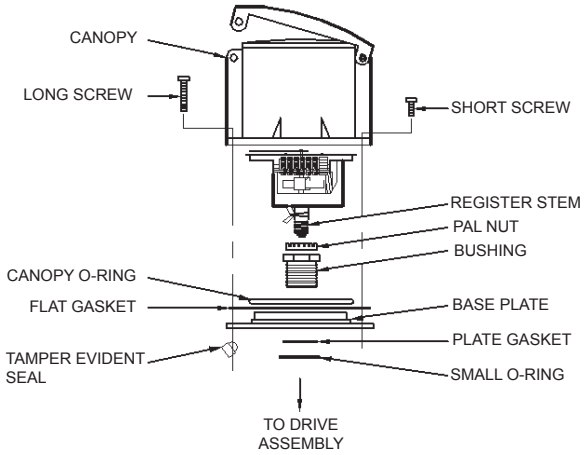

Figure: 14 Meterhead

The instantaneous flow indicator is of the mechanical magnetic cup design. Indicator units include gallons per minute, cubic feet per second, and liters per second, as well as many others. McCrometer offers this instantaneous flow indicator standard.

The entire register threads into a bushing which holds a die cast aluminum base plate to the ell where it connects with the drive cable. The base plate seals to the ell with an O-ring and gasket. A die cast aluminum canopy covers the register and attaches to the base plate with six screws. A stamped tamper evident seal attached to one of these screws ensures that the instrumentation of the register remains unaltered.

McCROMETER
www.mccrometer.com
3255 WEST STETSON AVENUE • HEMET, CALIFORNIA 92545 USA
TEL: 951-652-6811 • 800-220-2279 • FAX: 951-652-3078
Printed In The U.S.A Lit. # 24517-11 Rev. 3.4/02-09

Copyright © 1997-2009 McCrometer, Inc. All printed material should not be changed or altered without permission of McCrometer. Any published technical data and instructions are subject to change without notice. Contact your McCrometer representative for current technical data and instructions.

4.6 REGISTER EXTENSION

The L0780 Register Extension provides a means for relocating a McCrometer Propeller Flow Meter register to a height that improves access and protection of the register.

The L0780 Register Extension extends the register up from the top of the flow meter to a maximum height of 120'. The extension pipe material is 1" Schedule 80, 304 stainless steel. The extension is provided as a kit, including drive cable and sealing hardware. All Mc Propeller flow meters can utilize the extension. The existing meter base plate, register and register canopy are reused.

Meter performance is typically unaffected by the addition of a register extension. Long extensions on small flow meters may require a higher minimum flow rate to operate properly. Maximum flow rates are unaffected. All other aspects of meter performance are unchanged by the extension. The stainless steel construction provides corrosion resistance and requires little maintenance once installed. The meter environmental protection rating of NEMA 4x is retained when the installation is properly installed and maintained.

Applications that would benefit from the installation of the L0780 Register Extension are:

- Flow meter locations subjected to temporary local flooding or washdown.
- Pits and other meter locations considered enclosed spaces.
- Meters installed below walkway level.
- Meters configured for higher than normal fluid temperatures.
- Electronic meters with digital registers or pulse transmitters can also use the extension for meter mounted or remote models.

The L0780 Register Extension is always mounted vertically on horizontally installed flow meters (see figure below). Meters subjected to pipe vibration should include appropriate anchoring of longer extensions. In areas with limited clearance over the meter, the overall height, including an open canopy lid, should be considered. Orientation of the register for easy viewing is accomplished when installing the register base plate after the extension is secured in place.

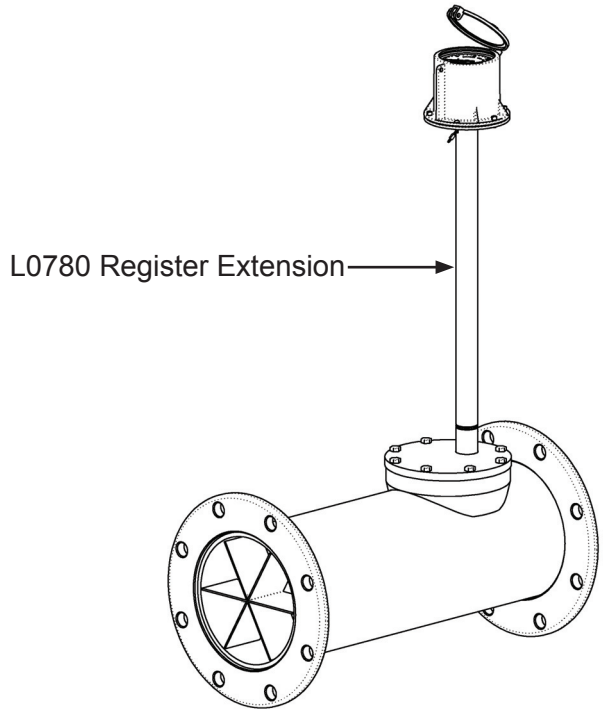

Figure: 15 L0780 Register Extension

McCROMETER
www.mccrometer.com
3255 WEST STETSON AVENUE • HEMET, CALIFORNIA 92545 USA
TEL: 951-652-6811 • 800-220-2279 • FAX: 951-652-3078
Printed In The U.S.A Lit. # 24517-11 Rev. 3.4/02-09

Copyright © 1997-2009 McCrometer, Inc. All printed material should not be changed or altered without permission of McCrometer. Any published technical data and instructions are subject to change without notice. Contact your McCrometer representative for current technical data and instructions.

5.0 MAINTENANCE AND TROUBLESHOOTING

McCrometer Inc. manufactures propeller meters to be as trouble free as possible. The first criterion in a successful meter application is that the meter is installed correctly. Please refer to the earlier Installation Instructions or call an authorized service representative or the factory to answer any questions.

5.1 OCCASIONAL INSPECTIONS

Mc Propeller Meters commonly operate for years with little or no routine maintenance. Occasional inspections should be conducted to listen and look for signs of mechanical wear and breakage, such as:

- Mc Propeller flowmeters operate very quietly. Any grinding or growling noises that can be detected are the first signs that mechanical failure is near.

- Visual cues are also valuable indicators. A once steady rate-of-flow indicator that has become erratic is usually indicative of something beginning to fail. Fogging visible through the lens would suggest a leak, either from the bearing assembly, or from an external seal.

- If there is doubt whether your rate of flow indicator is properly functioning, perform this simple test. Bring the flow through the meter to a relatively high, steady rate. Time a specific increment of the totalizer wheel. Each meter will require different but simple calculations to determine if your rate of flow indicator agrees with your totalizer. For assistance with this test, contact your local McCrometer representative or the factory.

5.2 TOOLS LIST

The following list includes tools needed to service and maintain Mc Propeller meters:

- Open or box end wrenches for top plate bolts (these vary with line size):

1/2”	for 2”, 2 1/2”, and 3” line sizes
9/16”	for 4”, 6”, and 8” line sizes
3/4”	for 10” and 12” line sizes

- Open or box end wrenches in the following sizes:

9/16”	for propeller nut
1 3/8”	for bearing assembly
15/16”	for register pal nut

- 1 3/8” Deep Socket
- Standard, flat screwdriver with 6” reach for canopy screws
- Wire cutters for removing tamper evident seal
- Hammer
- Small wire brush for cleaning threads
- Clean cloth
- Loctite (Arontite Stock CE-805-Color Blue is suggested)
- Light machine oil

McCROMETER
www.mccrometer.com
3255 WEST STETSON AVENUE • HEMET, CALIFORNIA 92545 USA
TEL: 951-652-6811 • 800-220-2279 • FAX: 951-652-3078
Printed In The U.S.A Lit. # 24517-11 Rev. 3.4/02-09

Copyright © 1997-2009 McCrometer, Inc. All printed material should not be changed or altered without permission of McCrometer. Any published technical data and instructions are subject to change without notice. Contact your McCrometer representative for current technical data and instructions.

5.3 DISASSEMBLY AND INSPECTION PROCEDURE

1. REMOVE THE METER OR ELEMENT. Depending on the model, remove the entire meter or the metering element (propeller, bearing and drive assemblies, and meterhead) to access the propeller and bearing assembly.

WARNING: Do not remove the meter or top plate while the line is under pressure!

2. CHECK THE PROPELLER. Check the propeller for broken or damaged blades or foreign material hanging from it. Careful examination should be made of the propeller's trailing edge for damage. Some small nicks and abrasions to the leading edge of the blades are common and will not affect the accuracy of the meter. Mc Propeller's propeller blades are thick, resulting in a strong, stiff blade that does not change shape under normal operations.

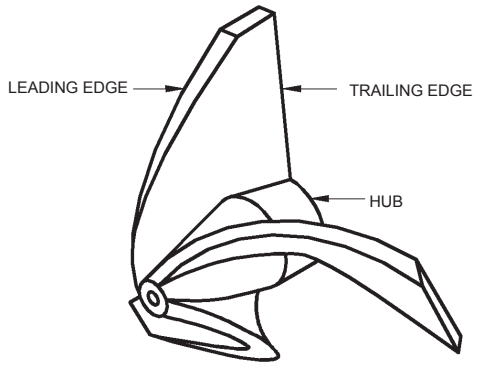

LEADING EDGE CAN HAVE SMALL NICKS AND ABRASIONS WITHOUT SACRIFICING ACCURACY.
THE TRAILING EDGE MUST BE CLEAN.

Figure: 16 Propeller Elements

3. CHECK THE BEARINGS. Check the condition of the bearings by grasping the propeller and trying to move it up and down and sideways. If the propeller has any amount of "play," then the bearing assembly should be replaced.

4. REMOVE THE PROPELLER. Remove the propeller by unscrewing the nut on the end of the propeller with a 9/16" wrench. Pull the propeller off the end of the bearing assembly shaft. Watch for the key, it may remain on the shaft, on the propeller, or fall free. If the propeller will not come off by hand, lightly tap the hub of the propeller with a hammer. Tap only the hub, since striking the trailing edge of the propeller blade may change the calibration of the meter. One or more stainless steel washers may be on the shaft. Leave these in place.

5. REMOVE THE BEARING ASSEMBLY. Remove the bearing assembly by unscrewing it with a 1 3/8" wrench. The drive cable may come out at this time. Set it aside for now. A deep 1-3/8" socket will be required for meters with fixed ells. After removing the bearing assembly, hold the shaft and spin the bearing housing. It should spin freely and smoothly. If it does not, it should be replaced.

6. CHECK. Check for damaged threads and clean the O-ring grooves.

7. REMOVE THE DRIVE CABLE. Now pull the drive cable out of the ell and inspect it for moisture, rust, wear, cracks, or breaks. If a cable appears worn, this is usually a symptom of another problem, such as moisture.

8. REMOVE THE REGISTER CANOPY. Remove the register canopy by unscrewing the five short screws and the one long screw with the tamper evident seal from around the base. Inspect the canopy and the base plate for signs of leaks.

IMPORTANT: Removing the tamper evident seal from a meter that is still under warranty could void the factory warranty.

McCROMETER
www.mccrometer.com
3255 WEST STETSON AVENUE • HEMET, CALIFORNIA 92545 USA
TEL: 951-652-6811 • 800-220-2279 • FAX: 951-652-3078
Printed In The U.S.A Lit. # 24517-11 Rev. 3.4/02-09

Copyright © 1997-2009 McCrometer, Inc. All printed material should not be changed or altered without permission of McCrometer. Any published technical data and instructions are subject to change without notice. Contact your McCrometer representative for current technical data and instructions.

9. REMOVE THE REGISTER HEAD. Remove the register head by loosening the pal nut on the stem of the register with a 15/16" wrench. Unscrew the whole register unit. Inspect the register for moisture. Look for a white chalky substance on the frame of the register that shows the register was wet. Turn the very bottom of the register stem several times. The register movement should turn freely. The first odometer wheel also should turn. If not, the register should be returned for repair or exchange. The purpose of the silica gel dry pack is to absorb moisture trapped during assembly. Replace the silica pack.

10. REMOVE THE CABLE LINER. If moisture exists inside the drive assembly, the liner should be taken out to dry. To remove the liner, use an item such as a large bolt to tap the liner down from the top. Tap enough to push the liner stop out from the bottom to allow the liner to be pulled free.

5.4 ORDERING REPLACEMENT PARTS

When ordering replacement parts, the meter's serial number is needed to ensure correct replacements. The serial number can be found on the register canopy lid. The number sequence should look similar to: 94-789-8. The first two digits are the year of manufacture, the second set of digits is the number of the meter, and the last set of digits is nominal line size. For meters manufactured before 1994, the last sets of digits are reversed. For specific meter part numbers, see the drawings of each meter type at the back of this Manual.

5.5 REASSEMBLY PROCEDURE

With the problem found and the correct replacement parts collected, the meter must be correctly reassembled to ensure trouble-free service in the future.

1. CLEAN ALL PARTS. As with any mechanical device, all of the parts that are going to be reused must be clean and free of dust and dirt. Take some time and make sure these parts are ready to be used.

2. REPLACE THE CABLE LINER. If the cable liner was removed, replace it now. Push the cable liner into the ell from the bottom up to the base plate. Replace the liner stop.

3. CLEAN THE LINER. Blow out any dirt that may be trapped inside the liner.

4. REPLACE THE BEARING ASSEMBLY. With a drop of light machine oil on your finger, lubricate the small O-rings on the end of the threaded ell. (Do not get oil on the threads of ell.) Place two drops of Loctite on the threads of the ell. Thread the bearing assembly on the ell and tighten with a wrench or a special bearing tool. Be careful not to cross thread the assembly and only snug the bearing assembly with the wrench. Extra care should be exercised in assuring that the parts are clean and the O-rings have a good sealing area.

5. REPLACE THE PROPELLER. Make sure the washers on the propeller shaft are in place. Slide the propeller over the shaft. Align the shaft and propeller keyways and insert the key. You may need to use a screw driver to push the key to the fully engaged position. Apply a small amount of Loctite to the threads of the nut and tighten to a good snug fit, but not as tight as possible.

IMPORTANT: Use only two drops of Loctite. Too much Loctite can cause the aft bearing to seize.

6. REPLACE THE DRIVE CABLE. With a clean cloth, wipe off any dirt or dust from the drive cable. Apply a small amount of light machine oil to the cable and insert it all the way into the ell. To engage the cable, slowly turn the propeller as you gently push on the cable. After you are satisfied that the cable is in the bearing assembly as far as possible, check the height of the cable in relationship to the top of the mounting plate bushing. The cable should be within 1/4 of an inch (plus or minus) from the top of the bushing. If not, it is the wrong cable or the cable is not fully seated into the bearing assembly.

7. REPLACE THE REGISTER HEAD. Thread the pal nut, with the open face up, onto the stem on the bottom of the register. The nut should be at least halfway up the threads. Place the register stem on the drive cable and screw it into the mounting plate bushing. The register should be screwed down far enough that the cable is well into the register stem, but not far enough to bind the cable. Face the register the desired direction and tighten the pal nut to lock the register into position.

McCROMETER
www.mccrometer.com
3255 WEST STETSON AVENUE • HEMET, CALIFORNIA 92545 USA
TEL: 951-652-6811 • 800-220-2279 • FAX: 951-652-3078 Printed In The U.S.A Lit. # 24517-11 Rev. 3.4/02-09

Copyright © 1997-2009 McCrometer, Inc. All printed material should not be changed or altered without permission of McCrometer. Any published technical data and instructions are subject to change without notice. Contact your McCrometer representative for current technical data and instructions.

8. CHECK. Spin the propeller to check that the rate of flow indicator and totalizer are engaged. Listen for any clicking or grinding noises. The meter should turn quietly.

9. REPLACE THE REGISTER CANOPY. Install the large O-Ring and flat gasket onto the base plate. Use a small amount of light oil to lubricate the O-Ring and place the register canopy down over it. Push down until the O-Ring bottoms out against the base plate. Replace the six screws and lightly snug them.

10. RE-INSTALL THE FLOWMETER. Re-install the flowmeter. Before pressurizing the system, make sure all connections are properly secured. As an obvious general safety consideration, maintain a safe and prudent distance from the meter when the system is to be started. After the system restarts, the indicator should be smooth and the meter quiet.

6.0 TECHNICAL SPECIFICATIONS

ACCURACY/REPEATABILITY: ±2% of reading guaranteed throughout full range; ±1% over reduced range;
Repeatability 0.25% or better

MAXIMUM TEMPERATURE: (Standard Construction) 160°F constant

PRESSURE RATING: 150 psi

MATERIALS:

BEARING ASSEMBLY:
Impeller shaft is 316 stainless steel.
Ball bearings are 440C stainless steel.
MAGNETS: (Permanent type) Cast or sintered Alnico
BEARING HOUSING: Brass; Stainless Steel optional
SADDLE: 304 stainless steel construction

REGISTER: An instantaneous flowrate indicator and six-digit straight-reading totalizer are standard. The register is hermetically sealed within a die cast aluminum case. This protective housing includes a domed acrylic lens and hinged lens cover with locking hasp.

IMPELLER: Impellers are manufactured of high-impact plastic, retaining their shape and accuracy over the life of the meter. High temperature impeller is optional.

OPTIONS

- Saddle can be constructed to fit any outside diameter pipe dimensions, including metric sizes
- Can be used on a variety of pipe materials such as steel, plastic, cast iron, cement or asbestos cement
- Register extension
- All stainless steel bearing assembly
- High temperature construction
- “Over-Run” bearing assembly for higher than normal flowrates
- FlowCom Electronic Register
- A complete line of flow recording / control instrumentation including transmitters and flow computers
- Blank repair saddle
- Vanes
- Flow Straighteners

TECHNICAL SUPPORT

For technical assistance, please contact your authorized service representative or the factory at:

McCrometer Inc.
3255 W. Stetson Avenue
Hemet, CA 92545

PHONE: (951) 652-6811 FAX: (951) 652-3078

Hours: 8 a.m. - 4 p.m. PT, Mon-Fri

McCROMETER
www.mccrometer.com
3255 WEST STETSON AVENUE • HEMET, CALIFORNIA 92545 USA
TEL: 951-652-6811 • 800-220-2279 • FAX: 951-652-3078
Printed In The U.S.A Lit. # 24517-11 Rev. 3.4/02-09

Copyright © 1997-2009 McCrometer, Inc. All printed material should not be changed or altered without permission of McCrometer. Any published technical data and instructions are subject to change without notice. Contact your McCrometer representative for current technical data and instructions.

MF100 MG100 MS100 MT100

McCROMETER

DESC 2", 2-1/2", & 3" FIXED ELL METERS

BY	DATE	APP	DATE
CEH	9-28-1993	EDM	4-6-2007

FILE: 24517-11-01.dwg

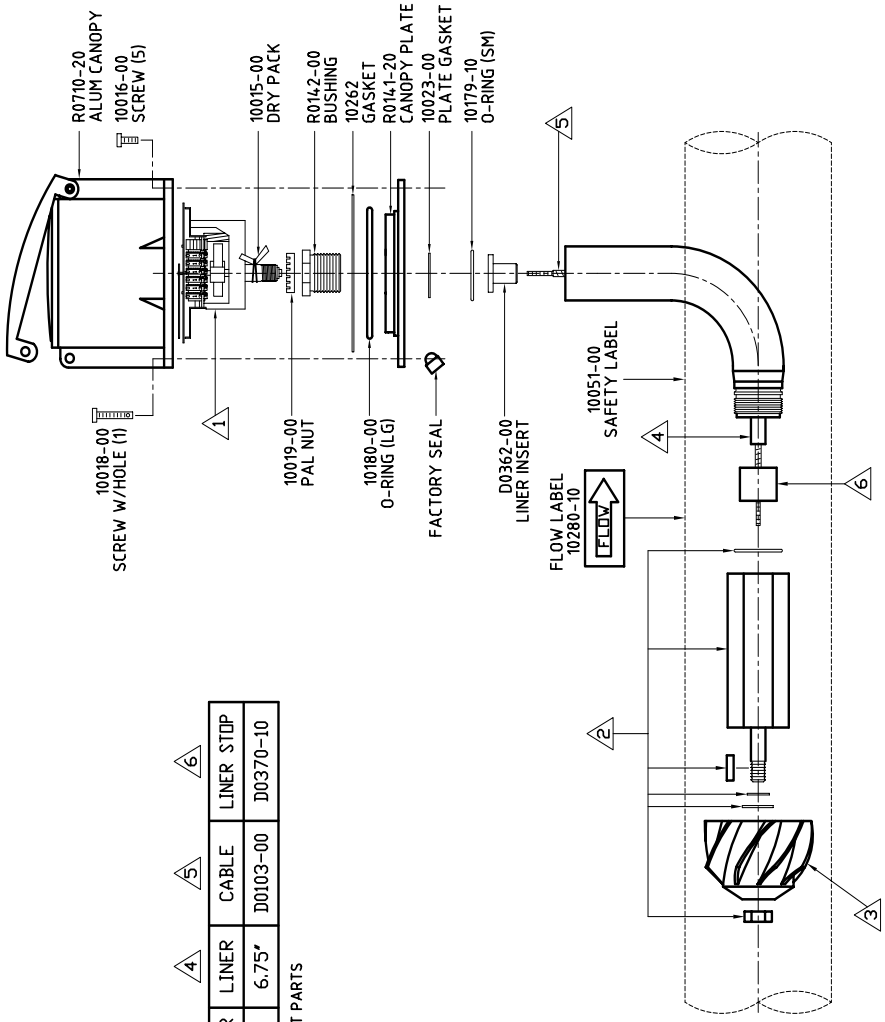

NOTES:
1. XX DEPENDS ON SPECIFIC REQUIREMENT
2. DRAWING IS NOT SHOWN TO SCALE.

	1	2	3	4	5	6
NOMINAL SIZE	REGISTER	BEARING	PROPELLER	LINER	CABLE	LINER STOP
2", 2-1/2", 3"	R1103-XX	B0700-XX	P0103-XX	6.75"	D0103-00	D0370-10

PLEASE HAVE THE METER SERIAL NUMBER WHEN ORDERING REPLACEMENT PARTS

3-PIECE SUPPORT REPLACEMENT COMPONENTS

	4	5	6
NOMINAL SIZE	LINER	CABLE	LINER STOP
2", 2-1/2", 3"	5.31"	D0066-00	D0370-00

THIS DOCUMENT CONTAINS PROPRIETARY INFORMATION AND MAY NOT BE DISCLOSED TO OTHERS FOR ANY PURPOSE, NOR USED FOR MANUFACTURING PURPOSES WITHOUT WRITTEN PERMISSION FROM MCCROMETER, INC.

REV	4	4-6-2007 JMC

Page 1 of 1

McCROMETER
www.mccrometer.com
3255 WEST STETSON AVENUE • HEMET, CALIFORNIA 92545 USA
TEL: 951-652-6811 • 800-220-2279 • FAX: 951-652-3078
Printed In The U.S.A Lit. # 24517-11 Rev. 3.4/02-09

Copyright © 1997-2009 McCrometer, Inc. All printed material should not be changed or altered without permission of McCrometer. Any published technical data and instructions are subject to change without notice. Contact your McCrometer representative for current technical data and instructions.

MF100 MZ100 MZ200 MG100 MS100 MT104 MT106

McCROMETER

FILE: 24517-11-02.dwg

DESC					
4" THRU 24" FIXED ELL METERS					
BY	CEH	DATE	9-24-1993	APP	EDM	DATE	4-9-2007

NOTES:
1. XX DEPENDS ON SPECIFIC REQUIREMENT
2. DRAWING IS NOT SHOWN TO SCALE.

MG100 MS100 MT104 & MT106

SIZE	REGISTER (1)	BEARING (2)	PROPELLER (3)	LINER (4)	CABLE (5)
4"	R1104-XX	B0600-XX	P0104-XX	D0304-00	D0104-00
6"	R1106-XX	B0100-XX	P0106-XX	D0304-00	D0104-00
8"	R1108-XX	B0100-XX	P0108-XX	D0304-00	D0104-00
10"	R1110-XX	B0100-XX	P0110-XX	D0303-00	D0122-00
12"	R1112-XX	B0100-XX	P0112-XX	D0305-00	D0105-00
14"	R1114-XX	B0100-XX	P0112-XX	D0313-00	D0123-00
16"	R1116-XX	B0100-XX	P0112-XX	D0306-00	D0106-00
18"	R1118-XX	B1500-XX	P0116-XX	D0307-00	D0107-00
20"	R1120-XX	B1500-XX	P0116-XX	D0307-00	D0107-00
24"	R1124-XX	B1500-XX	P0116-XX	D0308-00	D0108-00

PLEASE HAVE THE METER SERIAL NUMBER WHEN ORDERING REPLACEMENT PARTS

MF100 MZ100 MZ200

SIZE	LINER (4)	CABLE (5)
4"	D0304-00	D0104-00
6"	D0304-00	D0104-00
8"	D0304-00	D0104-00
10"	D0306-00	D0106-00
12"	D0306-00	D0106-00
14"	D0307-00	D0107-00
16"	D0307-00	D0107-00
18"	D0307-00	D0107-00

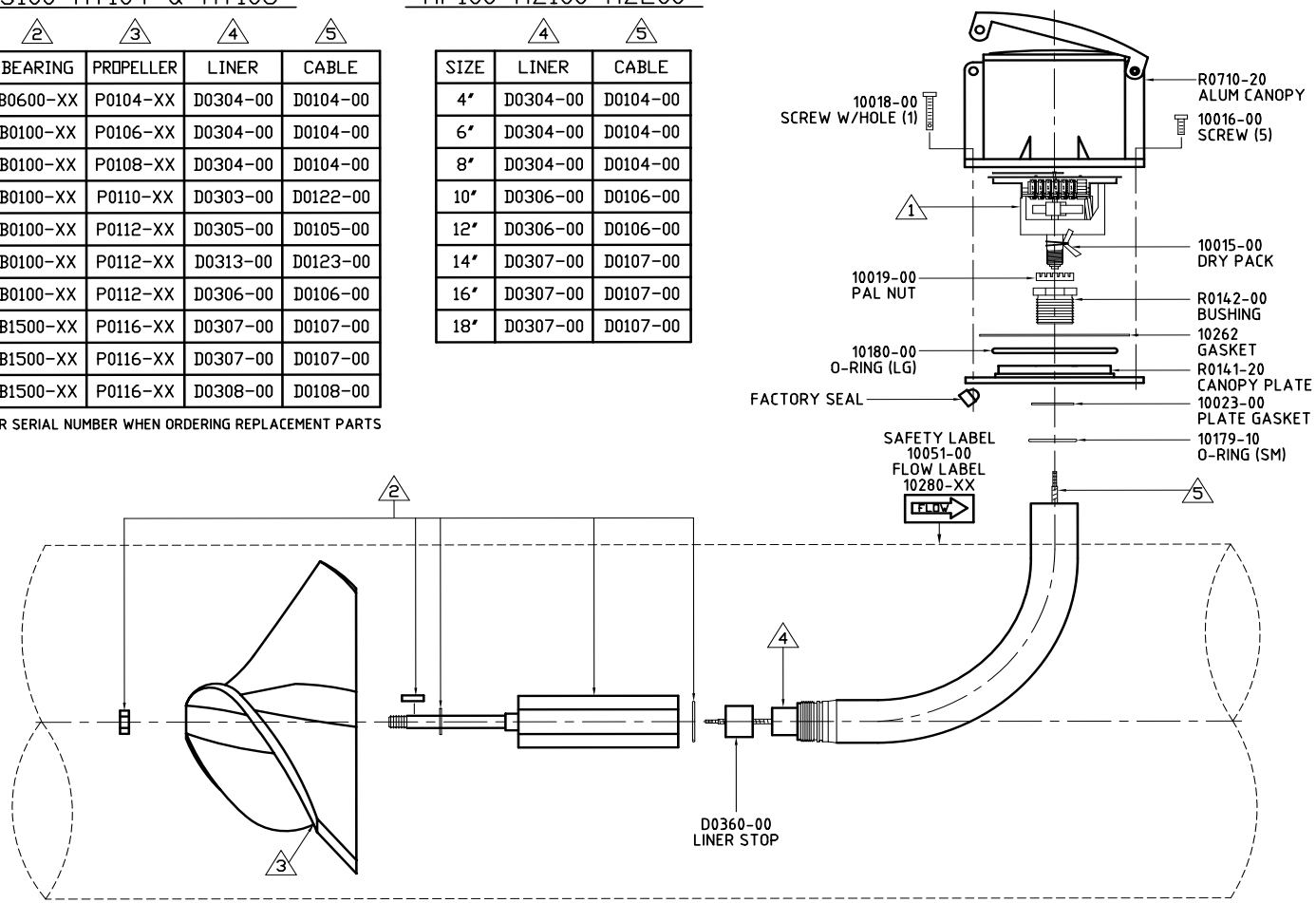

THIS DOCUMENT CONTAINS PROPRIETARY INFORMATION AND MAY NOT BE DISCLOSED TO OTHERS FOR ANY PURPOSE, NOR USED FOR MANUFACTURING PURPOSES WITHOUT WRITTEN PERMISSION FROM MCCROMETER, INC.

REV	5	4-9-2007 JMC	Page 1 of 1

McCROMETER
www.mccrometer.com
3255 WEST STETSON AVENUE • HEMET, CALIFORNIA 92545 USA
TEL: 951-652-6811 • 800-220-2279 • FAX: 951-652-3078
Printed In The U.S.A Lit. # 24517-11 Rev. 3.4/02-09

Copyright © 1997-2009 McCrometer, Inc. All printed material should not be changed or altered without permission of McCrometer. Any published technical data and instructions are subject to change without notice. Contact your McCrometer representative for current technical data and instructions.

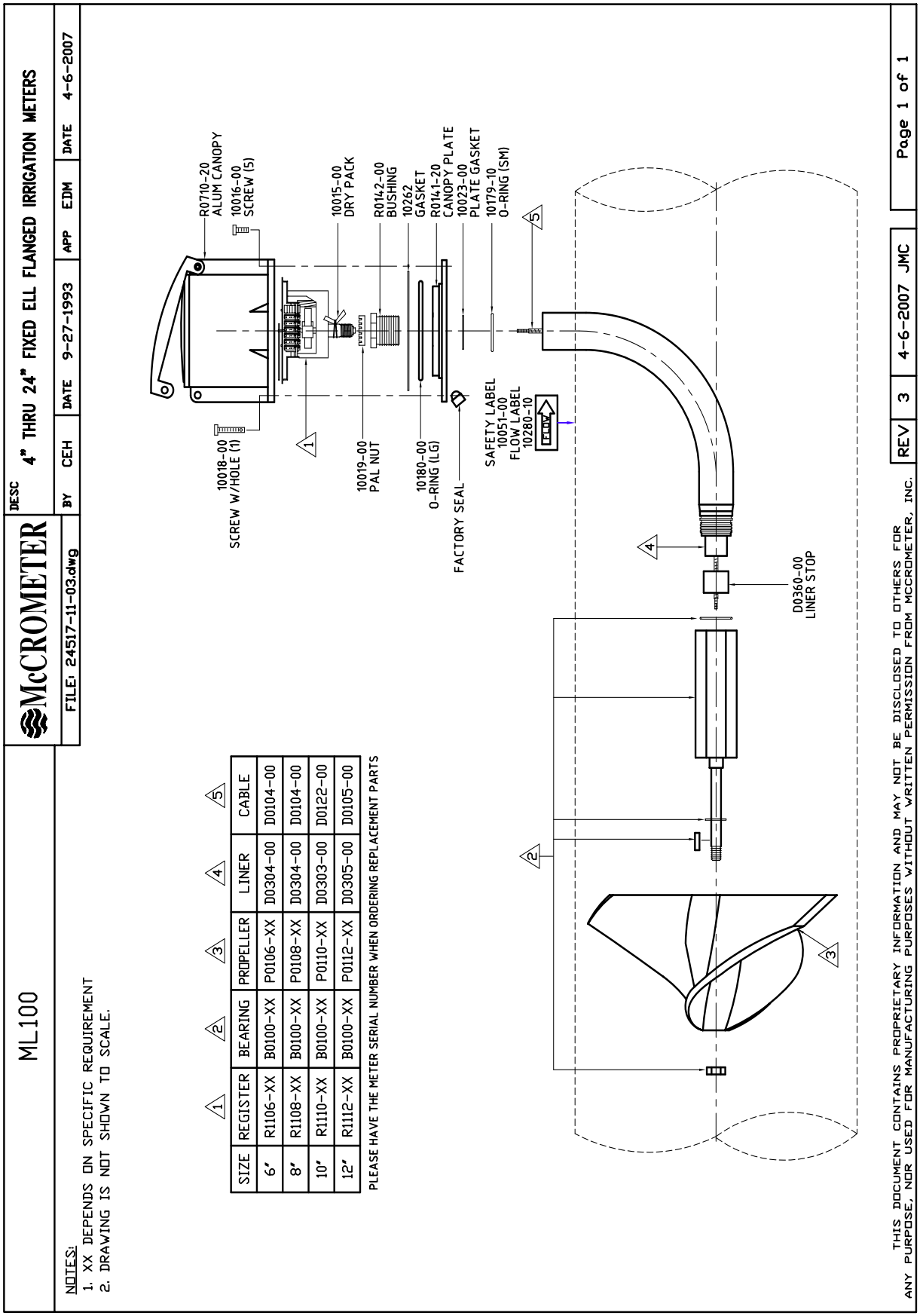

SIZE	REGISTER (1)	BEARING (2)	PROPELLER (3)	LINER (4)	CABLE (5)
6"	R1106-XX	B0100-XX	P0106-XX	D0304-00	D0104-00
8"	R1108-XX	B0100-XX	P0108-XX	D0304-00	D0104-00
10"	R1110-XX	B0100-XX	P0110-XX	D0303-00	D0122-00
12"	R1112-XX	B0100-XX	P0112-XX	D0305-00	D0105-00

McCROMETER
www.mccrometer.com
3255 WEST STETSON AVENUE • HEMET, CALIFORNIA 92545 USA
TEL: 951-652-6811 • 800-220-2279 • FAX: 951-652-3078
Printed In The U.S.A Lit. # 24517-11 Rev. 3.4/02-09

Copyright © 1997-2009 McCrometer, Inc. All printed material should not be changed or altered without permission of McCrometer. Any published technical data and instructions are subject to change without notice. Contact your McCrometer representative for current technical data and instructions.

M0300

McCROMETER

FILE: MAN M0300

DESC 6" THRU 16" BOLT ON SADDLE METERS

BY	CEH	DATE	9-23-1993	APP	EDM	DATE	4-6-2007

NOTES:
1. XX DEPENDS ON SPECIFIC REQUIREMENT
2. DRAWING IS NOT SHOWN TO SCALE.

MODEL	REGISTER (1)	BEARING (2)	PROPELLER (3)	LINER (4)	CABLE (5)	U-BOLT/STRAP (6)	GASKET (7)	TEMPLATE
M0306	R1106-XX	B0100-XX	P0106-XX	D0304-00	D0104-00	T0756-00 (2)	T0384-10	10112-03
M0308	R1108-XX	B0100-XX	P0108-XX	D0304-00	D0104-00	T0758-00 (2)	T0384-10	10112-05
M0310	R1110-XX	B0100-XX	P0110-XX	D0303-00	D0122-00	T0760-00 (2)	T0384-11	10112-07
M0312	R1112-XX	B0100-XX	P0112-XX	D0305-00	D0105-00	T0762-00 (2)	T0384-11	10112-09
M0314	R1114-XX	B0100-XX	P0112-XX	D0313-00	D0123-00	T0745-02 (2)	T0384-11	10112-09
M0316	R1116-XX	B0100-XX	P0112-XX	D0313-00	D0123-00	T0740-00 (2)	T0384-11	10112-09

PLEASE HAVE THE METER SERIAL NUMBER WHEN ORDERING REPLACEMENT PARTS

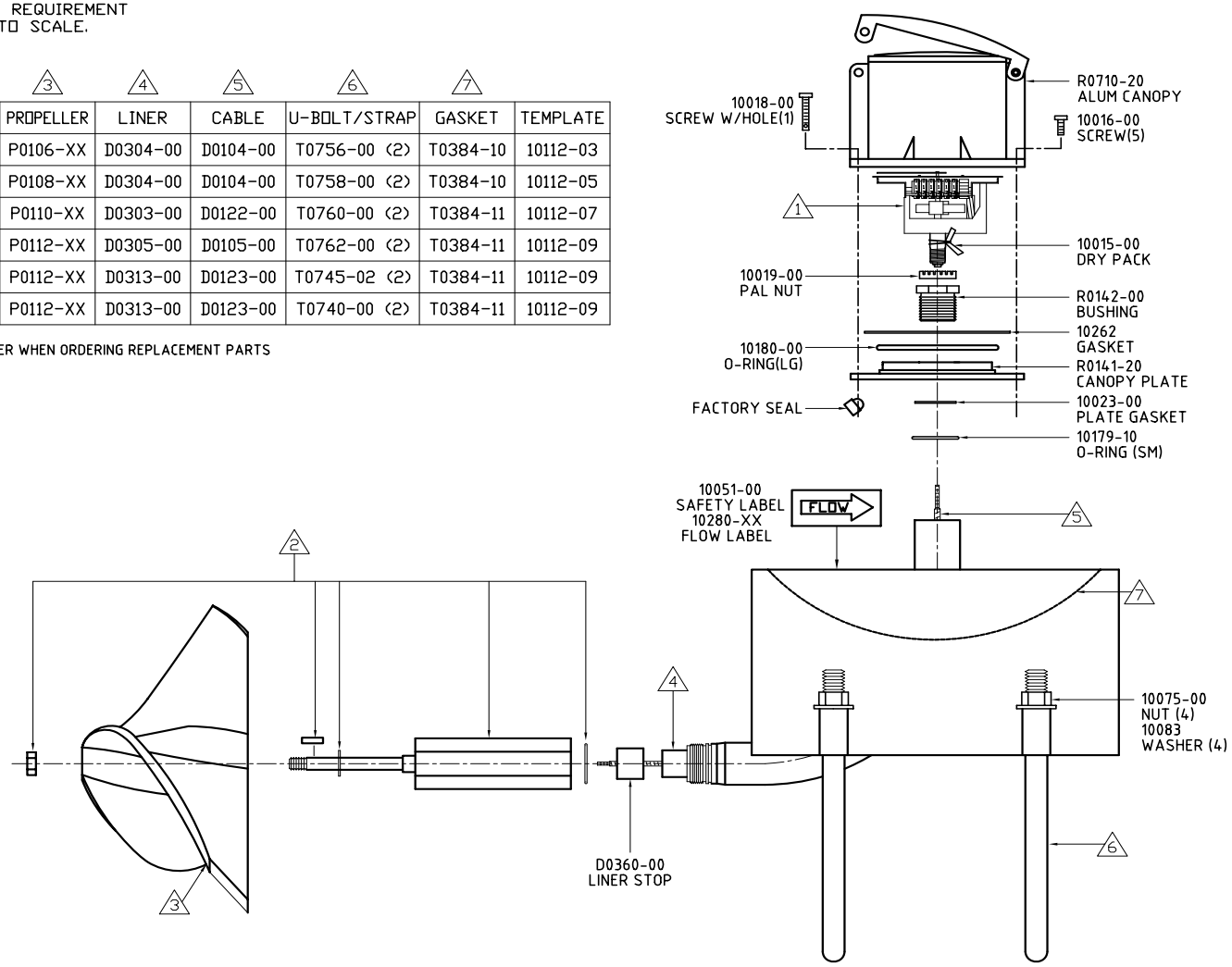

THIS DOCUMENT CONTAINS PROPRIETARY INFORMATION AND MAY NOT BE DISCLOSED TO OTHERS FOR ANY PURPOSE, NOR USED FOR MANUFACTURING PURPOSES WITHOUT WRITTEN PERMISSION FROM MCCROMETER, INC.

REV	6	4-6-2007 JMC

McCROMETER
www.mccrometer.com
3255 WEST STETSON AVENUE • HEMET, CALIFORNIA 92545 USA
TEL: 951-652-6811 • 800-220-2279 • FAX: 951-652-3078

Printed In The U.S.A Lit. # 24517-11 Rev. 3.4/02-09

Copyright © 1997-2009 McCrometer, Inc. All printed material should not be changed or altered without permission of McCrometer. Any published technical data and instructions are subject to change without notice. Contact your McCrometer representative for current technical data and instructions.

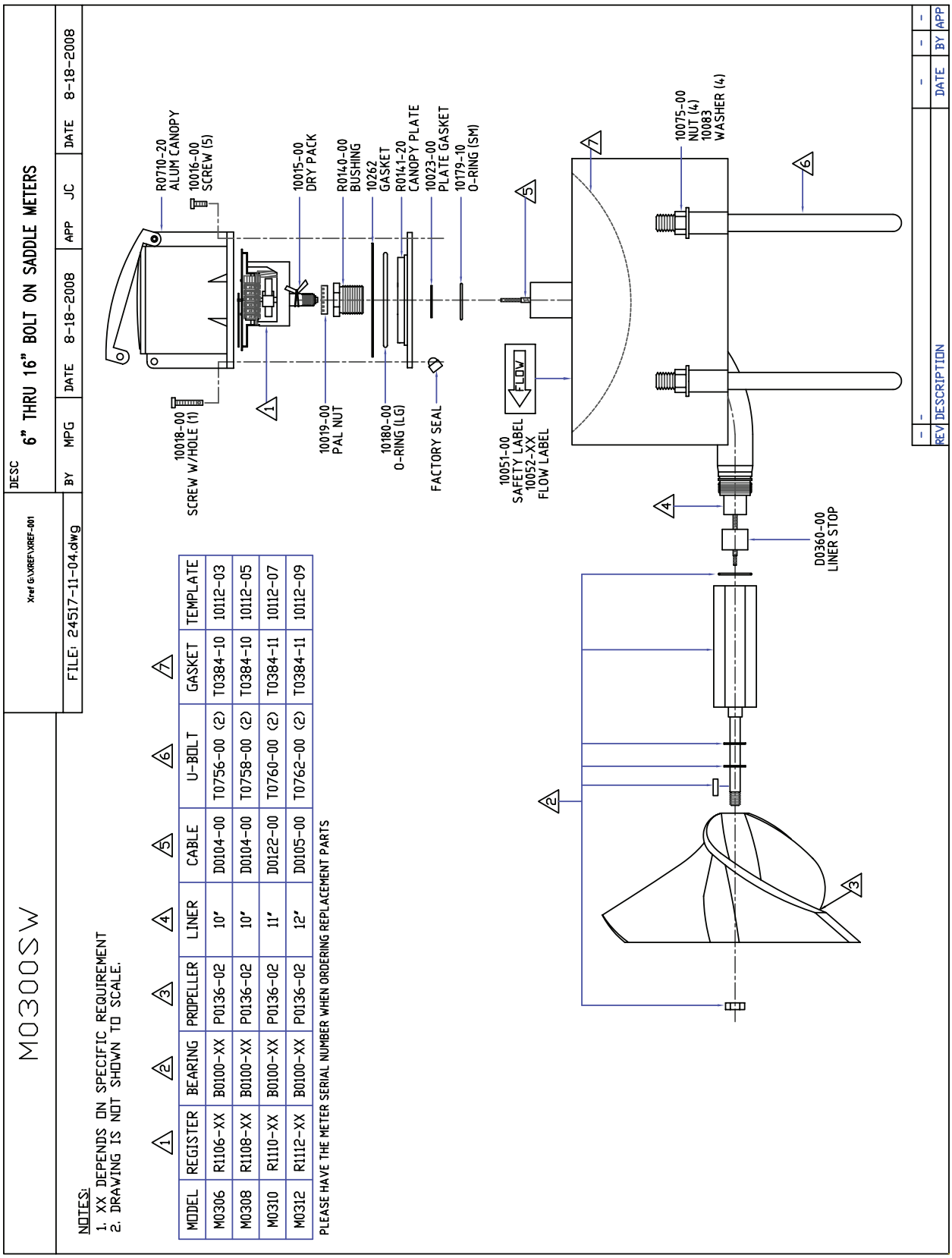

NOTES:
1. XX DEPENDS ON SPECIFIC REQUIREMENT
2. DRAWING IS NOT SHOWN TO SCALE.

MODEL	1 REGISTER	2 BEARING	3 PROPELLER	4 LINER	5 CABLE	6 U-BOLT	7 GASKET	TEMPLATE
M0306	R1106-XX	B0100-XX	P0136-02	10'	D0104-00	T0756-00 (2)	T0384-10	10112-03
M0308	R1108-XX	B0100-XX	P0136-02	10'	D0104-00	T0758-00 (2)	T0384-10	10112-05
M0310	R1110-XX	B0100-XX	P0136-02	11'	D0122-00	T0760-00 (2)	T0384-11	10112-07
M0312	R1112-XX	B0100-XX	P0136-02	12'	D0105-00	T0762-00 (2)	T0384-11	10112-09

PLEASE HAVE THE METER SERIAL NUMBER WHEN ORDERING REPLACEMENT PARTS

McCROMETER
www.mccrometer.com
3255 WEST STETSON AVENUE • HEMET, CALIFORNIA 92545 USA
TEL: 951-652-6811 • 800-220-2279 • FAX: 951-652-3078
Printed In The U.S.A Lit. # 24517-11 Rev. 3.4/02-09

Copyright © 1997-2009 McCrometer, Inc. All printed material should not be changed or altered without permission of McCrometer. Any published technical data and instructions are subject to change without notice. Contact your McCrometer representative for current technical data and instructions.

M0304

McCROMETER

FILE: MAN M0304

DESC 4" BOLT ON SADDLE METERS

BY	CEH	DATE	9-23-1993	APP	EDM	DATE	4-9-2007

NOTES:
1. XX DEPENDS ON SPECIFIC REQUIREMENT
2. DRAWING IS NOT SHOWN TO SCALE.

MODEL	REGISTER (1)	BEARING (2)	PROPELLER (3)	LINER (4)	CABLE (5)	LINER STOP (6)	U-BOLT (7)	GASKET (8)	TEMPLATE
M0	R1104-XX	B0600-XX	PT104-XX	6.75"	D0103-00	D0370-10	T0754-00 (2)	T0384-00	10112-01

PLEASE HAVE THE METER SERIAL NUMBER WHEN ORDERING REPLACEMENT PARTS

3-PIECE SUPPORT REPLACEMENT COMPONENTS

MODEL	LINER (4)	CABLE (5)	LINER STOP (6)
M0	5.31"	D0066-00	D0370-00

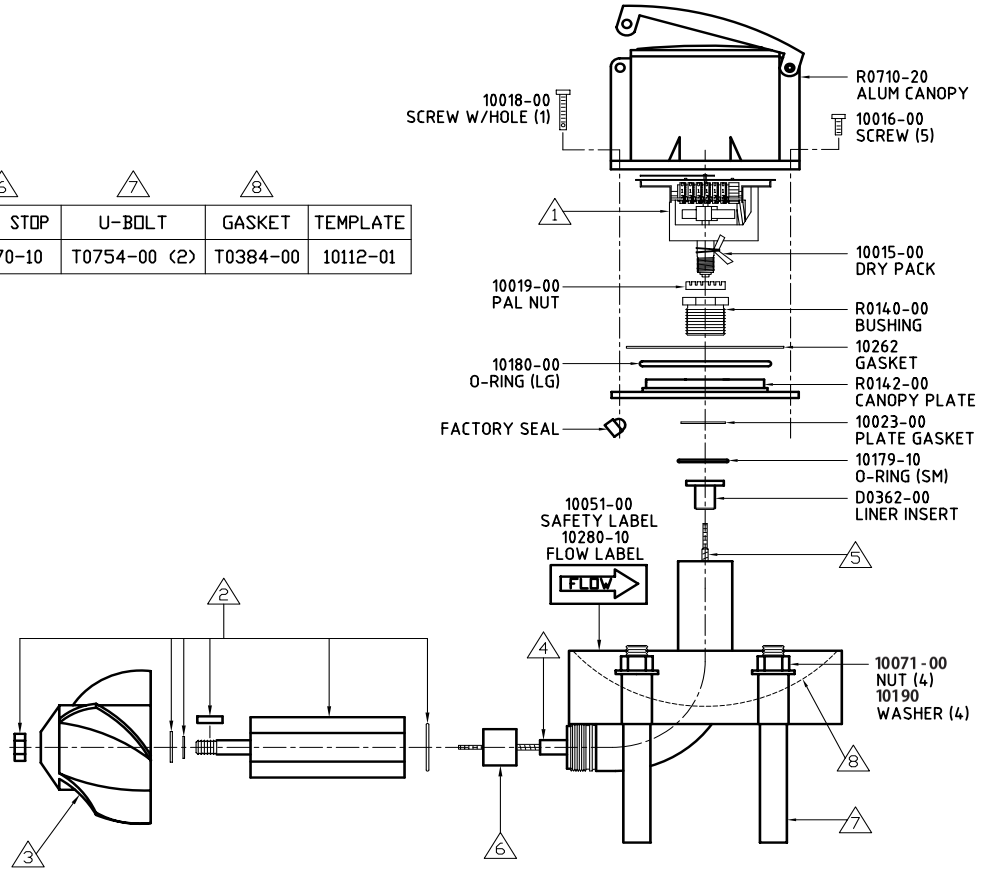

THIS DOCUMENT CONTAINS PROPRIETARY INFORMATION AND MAY NOT BE DISCLOSED TO OTHERS FOR ANY PURPOSE, NOR USED FOR MANUFACTURING PURPOSES WITHOUT WRITTEN PERMISSION FROM MCCROMETER, INC.

REV	5	4-9-2007 JMC

McCROMETER
www.mccrometer.com
3255 WEST STETSON AVENUE • HEMET, CALIFORNIA 92545 USA
TEL: 951-652-6811 • 800-220-2279 • FAX: 951-652-3078

Copyright © 1997-2009 McCrometer, Inc. All printed material should not be changed or altered without permission of McCrometer. Any published technical data and instructions are subject to change without notice. Contact your McCrometer representative for current technical data and instructions.

Printed In The U.S.A Lit. # 24517-11 Rev. 3.4/02-09

MW/QW500 MG900 MT900 MW900	McCROMETER	DESC 2", 2-1/2", & 3" TOP PLATE METERS CS & S304				
	FILE: 24517-11-06.dwg	BY CEH	DATE 10-6-1993	APP EDM	DATE 4-9-2007	

NOTES:
1. XX DEPENDS ON SPECIFIC REQUIREMENT
2. DRAWING IS NOT SHOWN TO SCALE.

MODEL	REGISTER (1)	BEARING (2)	PROPELLER (3)	LINER (4)	CABLE (5)	LINER STOP (6)	ELL-ASSY (7)	BOLT (6) (8)	O-RING (9)
MW MG MT MW	R1103-XX	B0700-XX	P0103-XX	6.75"	D0103-00	D0370-10	L0202-00	10049-10	10240-00
QW500	R1103-XX	B0700-XX	P0203-XX	6.75"	D0103-00	D0370-10	L0202-00	10049-10	10240-00

PLEASE HAVE THE METER SERIAL NUMBER WHEN ORDERING REPLACEMENT PARTS

3-PIECE SUPPORT REPLACEMENT COMPONENTS - ALL MODELS

NOMINAL SIZE	LINER (4)	CABLE (5)	LINER STOP (6)	ELL-ASSY (7)
2", 2-1/2", 3"	5.31"	D0066-00	D0370-00	L0203-10

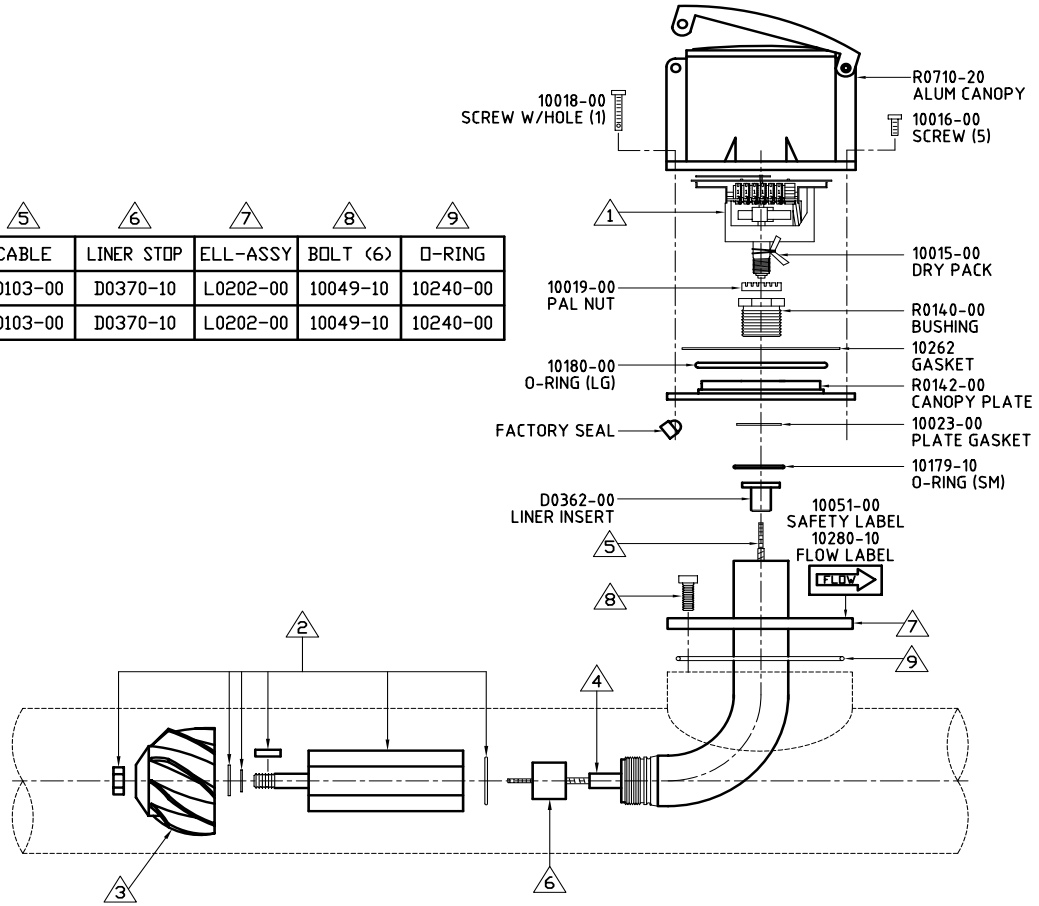

THIS DOCUMENT CONTAINS PROPRIETARY INFORMATION AND MAY NOT BE DISCLOSED TO OTHERS FOR ANY PURPOSE, NOR USED FOR MANUFACTURING PURPOSES WITHOUT WRITTEN PERMISSION FROM MCCROMETER, INC.

REV	3	4-9-2007 JMC	Page 1 of 1

McCROMETER
www.mccrometer.com
3255 WEST STETSON AVENUE • HEMET, CALIFORNIA 92545 USA
TEL: 951-652-6811 • 800-220-2279 • FAX: 951-652-3078

Printed In The U.S.A Lit. # 24517-11 Rev. 3.4/02-09

Copyright © 1997-2009 McCrometer, Inc. All printed material should not be changed or altered without permission of McCrometer. Any published technical data and instructions are subject to change without notice. Contact your McCrometer representative for current technical data and instructions.

MW500 MW600 MG/MW900 MT904 MT906

McCROMETER

FILE: 24517-11-07.dwg

DESC 4" THRU 24" TOP PLATE METERS

BY	CEH	DATE	9-23-1993	APP	EDM	DATE	6-9-2007

NOTES:
1. XX DEPENDS ON SPECIFIC REQUIREMENT
2. DRAWING IS NOT SHOWN TO SCALE.

SIZE	REGISTER (1)	BEARING (2)	PROPELLER (3)	LINER (4)	CABLE (5)	ELL-ASSY (6)	BOLT (7)	O-RING (8)
4"	R1104-XX	B0600-XX	P0104-XX	D0304-00	D0104-00	LQ204-10	10103-00 (6)	T0390-00
6"	R1106-XX	B0100-XX	P0106-XX	D0304-00	D0104-00	L0205-10	10103-00 (8)	T0390-10
8"	R1108-XX	B0100-XX	P0108-XX	D0303-00	D0122-00	L0206-10	10103-00 (8)	T0390-10
10"	R1110-XX	B0100-XX	P0110-XX	D0313-00	D0123-00	L0207-10	10050-00 (12)	T0399-10
12"	R1112-XX	B0100-XX	P0112-XX	D0306-00	D0106-00	L0208-10	10050-00 (12)	T0399-10
14"	R1114-XX	B0100-XX	P0112-XX	D0306-00	D0106-00	L0209-10	10050-00 (12)	T0399-10
16"	R1116-XX	B0100-XX	P0112-XX	D0307-00	D0107-00	L0210-10	10050-00 (12)	T0399-10
18"	R1118-XX	B1500-XX	P0116-XX	D0307-00	D0107-00	L0211-10	10099-00 (16)	T0399-11
20"	R1120-XX	B1500-XX	P0116-XX	D0308-00	D0108-00	L0212-10	10099-00 (16)	T0399-11
24"	R1124-XX	B1500-XX	P0116-XX	D0309-00	D0109-00	L0213-10	10099-00 (16)	T0399-11

PLEASE HAVE THE METER SERIAL NUMBER WHEN ORDERING REPLACEMENT PARTS

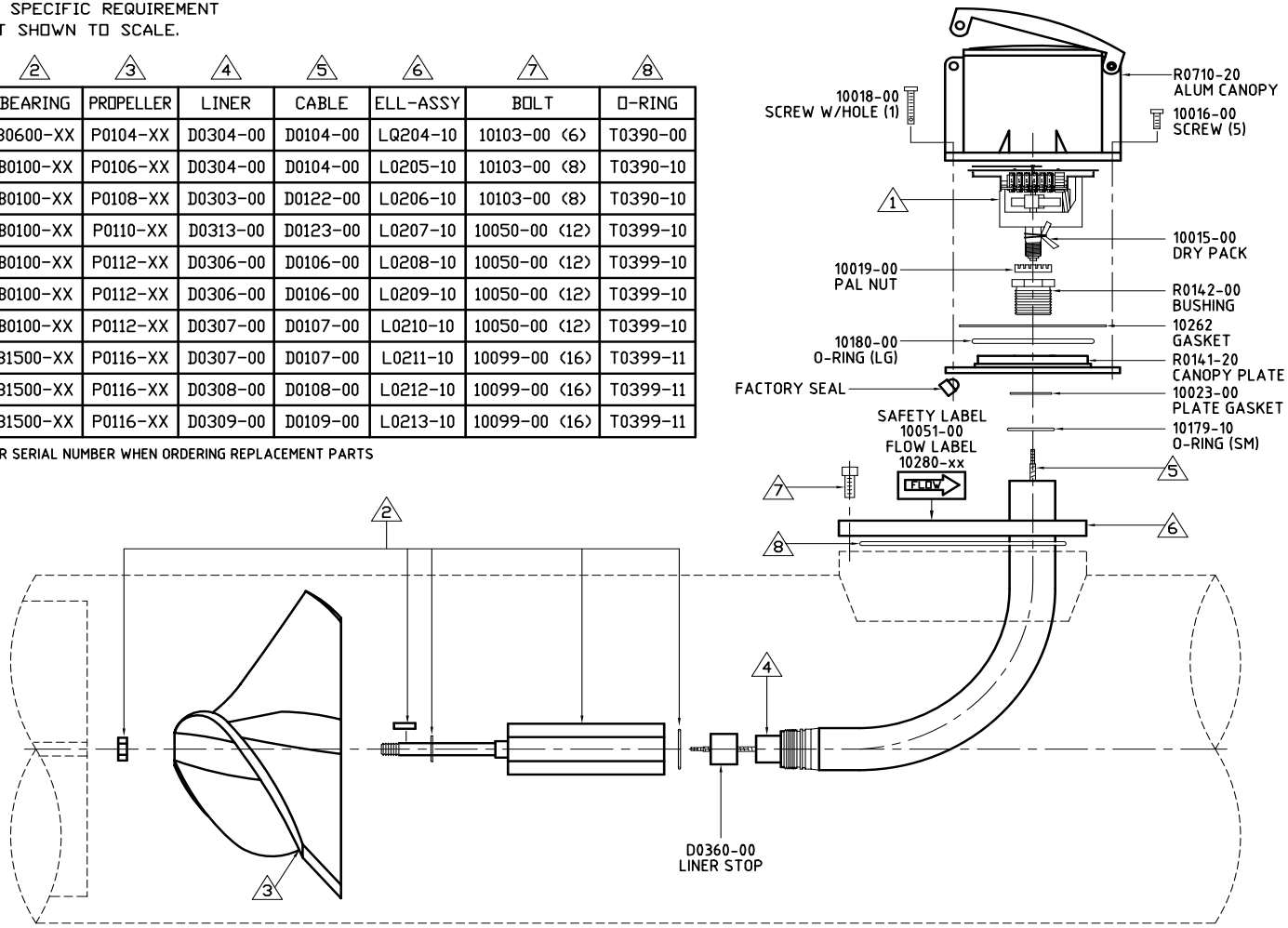

THIS DOCUMENT CONTAINS PROPRIETARY INFORMATION AND MAY NOT BE DISCLOSED TO OTHERS FOR ANY PURPOSE, NOR USED FOR MANUFACTURING PURPOSES WITHOUT WRITTEN PERMISSION FROM MCCROMETER, INC.

REV	4	4-9-2007 JMC

McCROMETER
www.mccrometer.com
3255 WEST STETSON AVENUE • HEMET, CALIFORNIA 92545 USA
TEL: 951-652-6811 • 800-220-2279 • FAX: 951-652-3078

Copyright © 1997-2009 McCrometer, Inc. All printed material should not be changed or altered without permission of McCrometer. Any published technical data and instructions are subject to change without notice. Contact your McCrometer representative for current technical data and instructions.

Printed In The U.S.A Lit. # 24517-11 Rev. 3.4/02-09

MZ500

McCROMETER

FILE: 24517-11-08.dwg

DESC 4" THRU 16" TOP PLATE METERS 300 PSI

BY	CEH	DATE	9-29-1993	APP	EDM	DATE	4-9-2007

NOTES:
1. XX DEPENDS ON SPECIFIC REQUIREMENT
2. DRAWING IS NOT SHOWN TO SCALE.

SIZE	REGISTER (1)	BEARING (2)	PROPELLER (3)	LINER (4)	CABLE (5)	ELL-ASSY (6)	BOLT (7)	O-RING (8)
4"	R1104-XX	B0600-XX	P0104-XX	D0304-00	D0104-00	LQ204-10	10103-00 (6)	T0390-00
6"	R1106-XX	B0100-XX	P0106-XX	D0304-00	D0104-00	L0205-10	10103-00 (8)	T0390-10
8"	R1108-XX	B0100-XX	P0108-XX	D0303-00	D0122-00	L0206-10	10103-00 (8)	T0390-10
10"	R1110-XX	B0100-XX	P0110-XX	D0313-00	D0123-00	L0207-50	10099-00 (12)	T0399-10
12"	R1112-XX	B0100-XX	P0112-XX	D0306-00	D0106-00	L0208-20	10099-00 (12)	T0399-10
14"	R1114-XX	B0100-XX	P0112-XX	D0307-00	D0107-00	L0209-30	10099-00 (12)	T0399-10
16"	R1116-XX	B0100-XX	P0112-XX	D0307-00	D0107-00	L0210-30	10099-00 (12)	T0399-10

PLEASE HAVE THE METER SERIAL NUMBER WHEN ORDERING REPLACEMENT PARTS

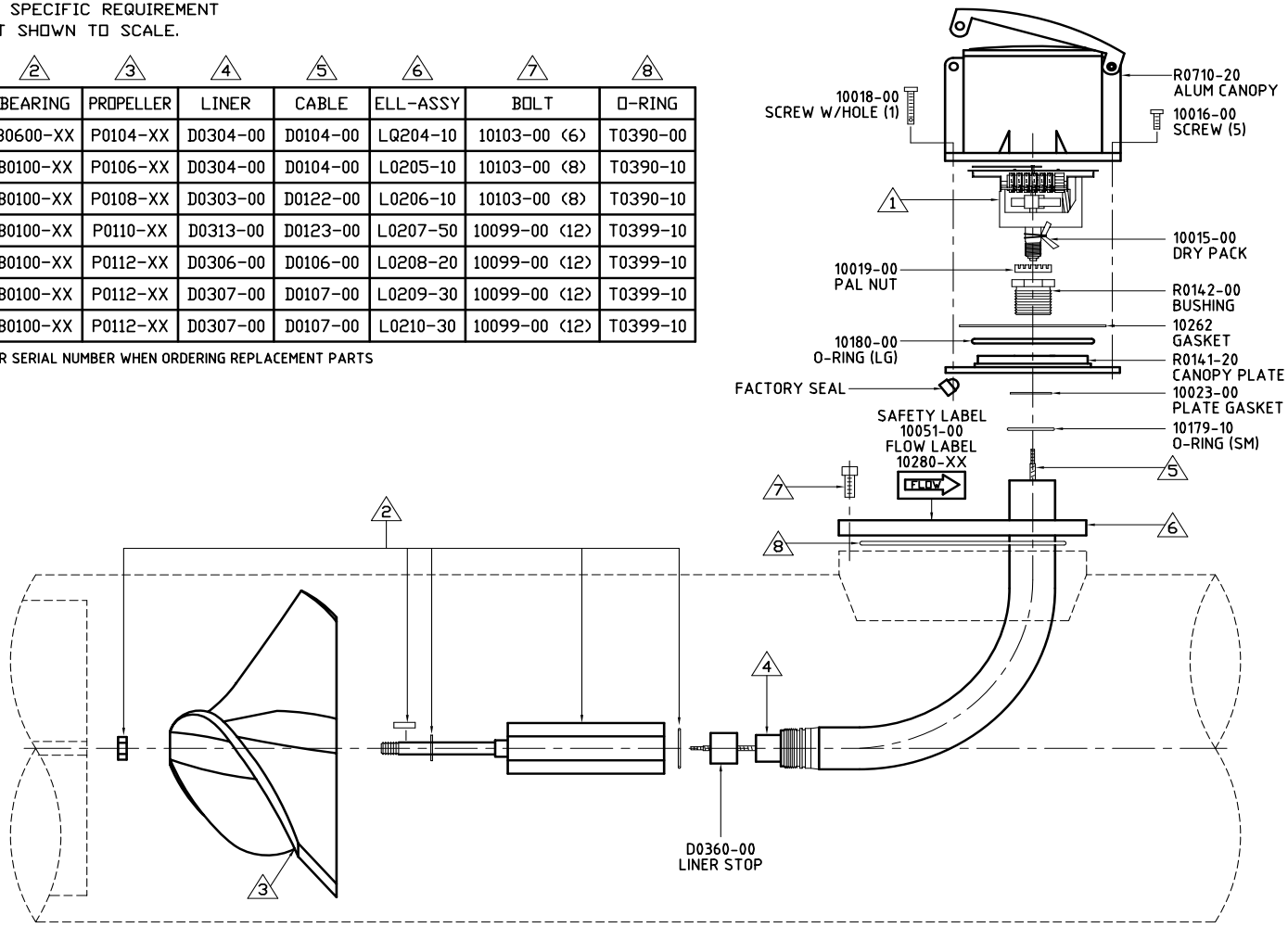

THIS DOCUMENT CONTAINS PROPRIETARY INFORMATION AND MAY NOT BE DISCLOSED TO OTHERS FOR ANY PURPOSE, NOR USED FOR MANUFACTURING PURPOSES WITHOUT WRITTEN PERMISSION FROM MCCROMETER, INC.

REV	3	4-9-2007 JMC

McCROMETER
www.mccrometer.com
3255 WEST STETSON AVENUE • HEMET, CALIFORNIA 92545 USA
TEL: 951-652-6811 • 800-220-2279 • FAX: 951-652-3078

Copyright © 1997-2009 McCrometer, Inc. All printed material should not be changed or altered without permission of McCrometer. Any published technical data and instructions are subject to change without notice. Contact your McCrometer representative for current technical data and instructions.

Printed In The U.S.A Lit. # 24517-11 Rev. 3.4/02-09

QW500

McCROMETER

FILE: 24517-11-09.dwg

DESC 4" THRU 36" TOP PLATE METERS S304

BY	CEH	DATE	9-28-1993	APP	EDM	DATE	4-10-2007

NOTES:
1. XX DEPENDS ON SPECIFIC REQUIREMENT
2. DRAWING IS NOT SHOWN TO SCALE.

SIZE	REGISTER (1)	BEARING (2)	PROPELLER (3)	LINER (4)	CABLE (5)	ELL-ASSY (6)	BOLT (7)	O-RING (8)
4"	R1104-XX	B0600-XX	P0204-XX	D0304-00	D0104-00	LQ204-10	10103-00 (6)	T0390-11
6"	R1106-XX	B0100-XX	P0206-XX	D0304-00	D0104-00	LQ205-10	10103-00 (8)	T0390-12
8"	R1108-XX	B0100-XX	P0208-XX	D0303-00	D0122-00	LQ206-10	10103-00 (8)	T0390-12
10"	R1110-XX	B0100-XX	P0210-XX	D0313-00	D0123-00	LQ207-10	10050-00 (12)	T0399-10
12"	R1112-XX	B0100-XX	P0112-XX	D0306-00	D0106-00	LQ208-10	10050-00 (12)	T0399-10
14"	R1114-XX	B0100-XX	P0112-XX	D0306-00	D0106-00	LQ209-10	10050-00 (12)	T0399-10
16"	R1116-XX	B0100-XX	P0112-XX	D0307-00	D0107-00	LQ210-10	10050-00 (12)	T0399-10
18"	R1118-XX	B1500-XX	P0116-XX	D0307-00	D0107-00	LQ211-10	10099-00 (16)	T0399-11
20"	R1120-XX	B1500-XX	P0116-XX	D0308-00	D0108-00	LQ212-10	10099-00 (16)	T0399-11
24"	R1124-XX	B1500-XX	P0116-XX	D0309-00	D0109-00	LQ213-10	10099-00 (16)	T0399-11
30"	R1130-XX	B1500-XX	P0145-XX	D0311-00	D0111-00	LQ216-10	10135-00 (16)	T0399-12
36"	R1136-XX	B1500-XX	P0146-XX	D0312-00	D0112-00	LQ217-10	10135-00 (16)	T0399-13

PLEASE HAVE THE METER SERIAL NUMBER WHEN ORDERING REPLACEMENT PARTS

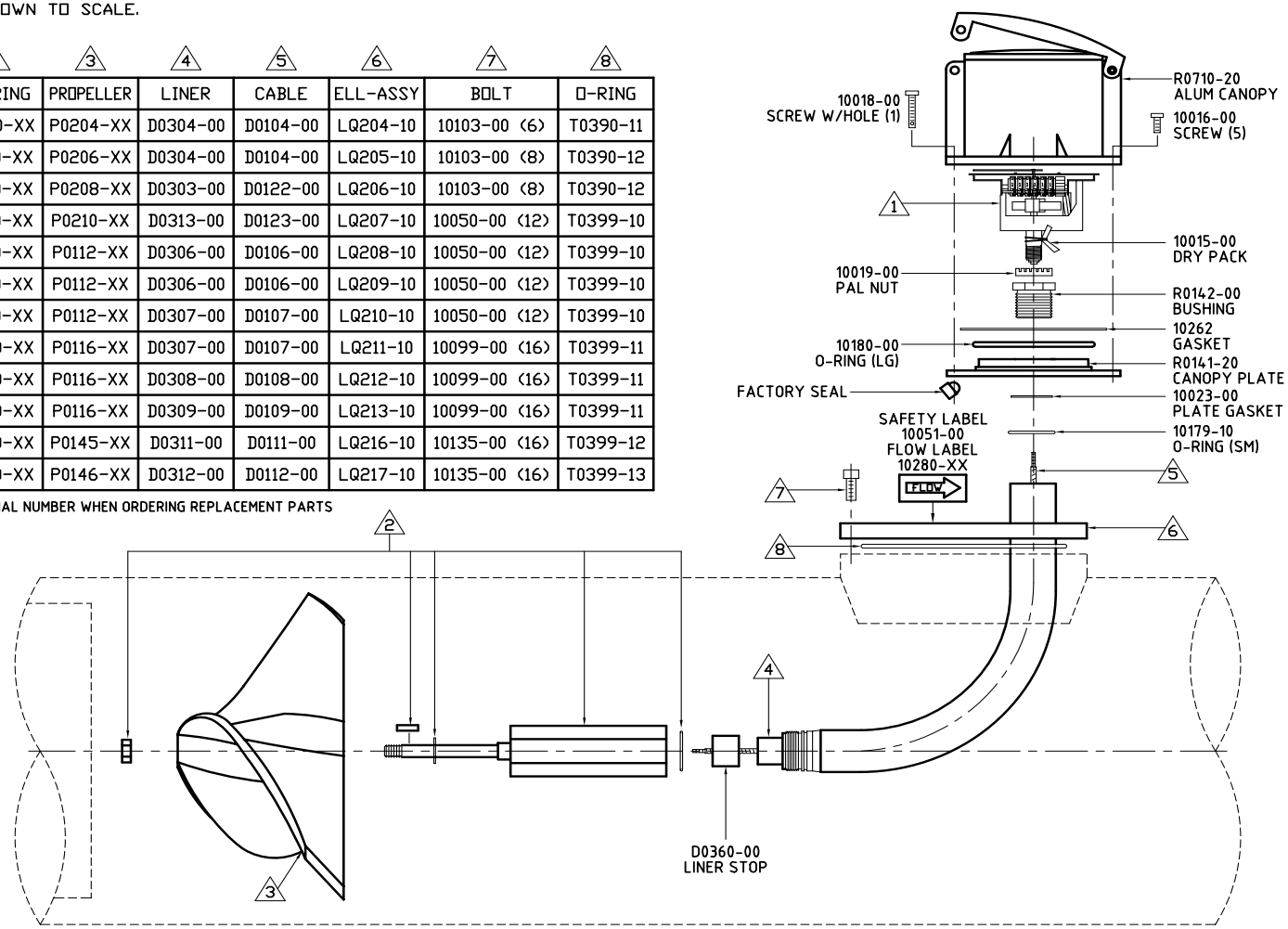

THIS DOCUMENT CONTAINS PROPRIETARY INFORMATION AND MAY NOT BE DISCLOSED TO OTHERS FOR ANY PURPOSE, NOR USED FOR MANUFACTURING PURPOSES WITHOUT WRITTEN PERMISSION FROM MCCROMETER, INC.

REV	4	4-10-2007 JMC	Page 1 of 1

McCROMETER
www.mccrometer.com
3255 WEST STETSON AVENUE • HEMET, CALIFORNIA 92545 USA
TEL: 951-652-6811 • 800-220-2279 • FAX: 951-652-3078
Printed In The U.S.A Lit. # 24517-11 Rev. 3.4/02-09

Copyright © 1997-2009 McCrometer, Inc. All printed material should not be changed or altered without permission of McCrometer. Any published technical data and instructions are subject to change without notice. Contact your McCrometer representative for current technical data and instructions.

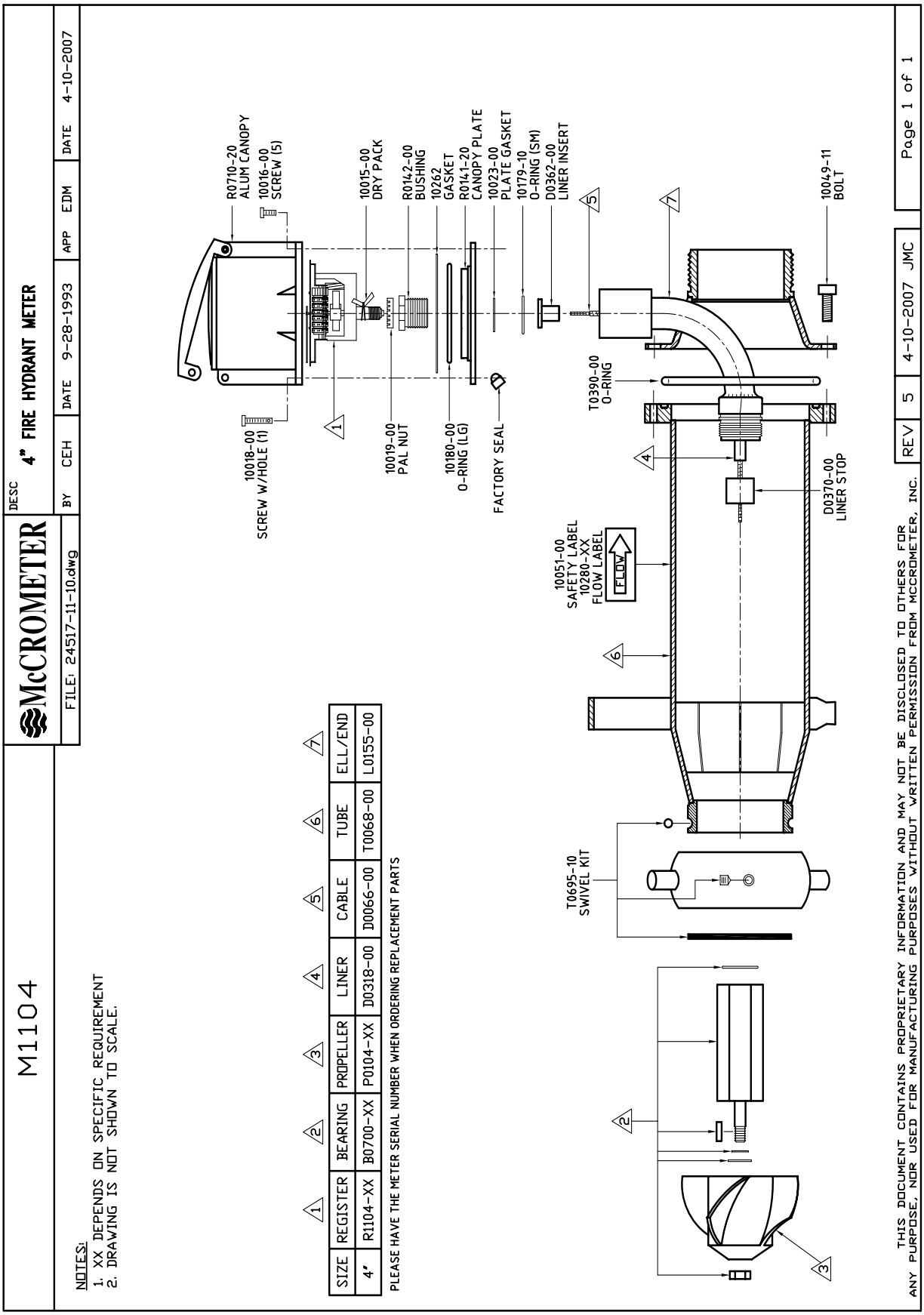

McCROMETER
www.mccrometer.com
3255 WEST STETSON AVENUE • HEMET, CALIFORNIA 92545 USA
TEL: 951-652-6811 • 800-220-2279 • FAX: 951-652-3078
Printed In The U.S.A Lit. # 24517-11 Rev. 3.4/02-09

Copyright © 1997-2009 McCrometer, Inc. All printed material should not be changed or altered without permission of McCrometer. Any published technical data and instructions are subject to change without notice. Contact your McCrometer representative for current technical data and instructions.

M1400

McCROMETER

FILE: MAN M1400

DESC 18" THRU 48" BOLT ON SADDLE METERS

BY	CEH	DATE	9-27-1993	APP	EDM	DATE	4-10-2007

NOTES:
1. XX DEPENDS ON SPECIFIC REQUIREMENT
2. DRAWING IS NOT SHOWN TO SCALE.
3. CONSULT FACTORY FOR U-STRAP SIZE.

MODEL	REGISTER (1)	BEARING (2)	PROPELLER (3)	LINER (4)	CABLE (5)	GASKET (6)	TEMPLATE
M1418	R1118-XX	B1500-XX	P0116-XX	D0306-00	D0106-00	T0384-12	10112-10
M1420	R1120-XX	B1500-XX	P0116-XX	D0307-00	D0107-00	T0384-12	10112-10
M1422	R1122-XX	B1500-XX	P0116-XX	D0307-00	D0107-00	X8001-00	10112-10
M1424	R1124-XX	B1500-XX	P0116-XX	D0308-00	D0108-00	X8001-00	10112-10
M1426	R1126-XX	B1500-XX	P0116-XX	D0308-00	D0108-00	X8001-00	10112-10
M1428	R1128-XX	B1500-XX	P0145-XX	D0309-00	D0109-00	X8001-00	
M1430	R1130-XX	B1500-XX	P0145-XX	D0309-00	D0109-00	X8001-00	
M1432	R1132-XX	B1500-XX	P0145-XX	D0310-00	D0110-00	X8001-00	
M1436	R1136-XX	B1500-XX	P0146-XX	D0311-00	D0111-00	X8001-00	
M1442	R1142-XX	B1500-XX	P0146-XX	D0312-00	D0112-00	X8001-00	
M1448	R1148-XX	B1500-XX	P0146-XX	29"	31.19"	X8001-00	

PLEASE HAVE THE METER SERIAL NUMBER WHEN ORDERING REPLACEMENT PARTS

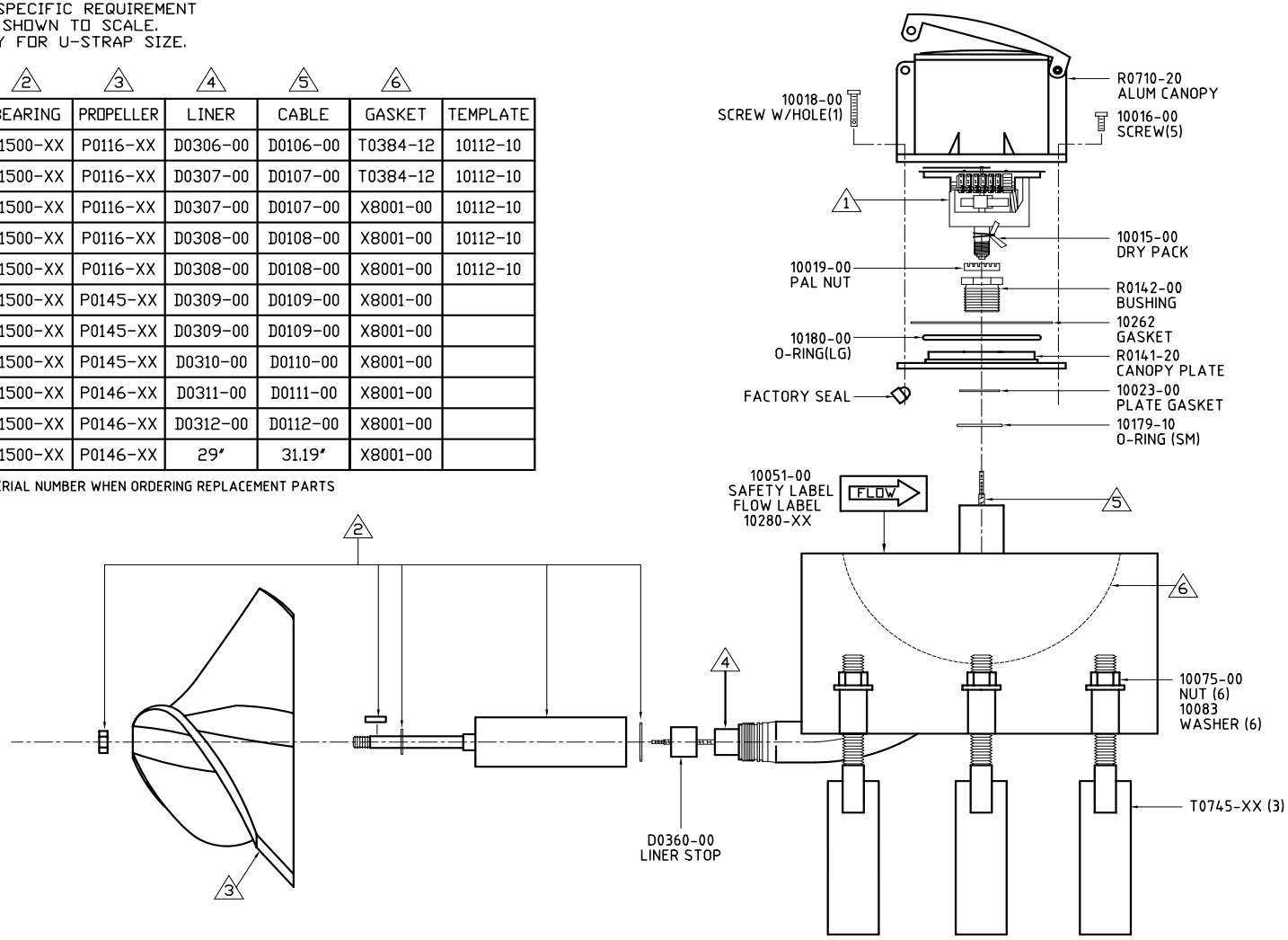

THIS DOCUMENT CONTAINS PROPRIETARY INFORMATION AND MAY NOT BE DISCLOSED TO OTHERS FOR ANY PURPOSE, NOR USED FOR MANUFACTURING PURPOSES WITHOUT WRITTEN PERMISSION FROM MCCROMETER, INC.

REV	4	4-10-2007 JMC	Page 1 of 1

McCROMETER
www.mccrometer.com
3255 WEST STETSON AVENUE • HEMET, CALIFORNIA 92545 USA
TEL: 951-652-6811 • 800-220-2279 • FAX: 951-652-3078

Printed In The U.S.A Lit. # 24517-11 Rev. 3.4/02-09

Copyright © 1997-2009 McCrometer, Inc. All printed material should not be changed or altered without permission of McCrometer. Any published technical data and instructions are subject to change without notice. Contact your McCrometer representative for current technical data and instructions.

M1708 THRU M1736

McCROMETER

DESC 8" THRU 36" OPEN FLOW METERS

FILE: 24517-11-12.dwg | BY CEH | DATE 10-01-1993 | APP EDM | DATE 4-10-2007

NOTES:
1. XX DEPENDS ON SPECIFIC REQUIREMENT
2. DRAWING IS NOT SHOWN TO SCALE.

SIZE	REGISTER (1)	BEARING (2)	PROPELLER (3)	LINER (4)	CABLE (5)	DROP PIPE (6)	HEIGHT
8"	R1108-XX	B0100-XX	P0108-XX	59"	D0126-00	L0775-10	5'
10"	R1110-XX	B0100-XX	P0110-XX	59"	D0126-00	L0775-10	5'
12"	R1112-XX	B0100-XX	P0112-XX	59"	D0126-00	L0775-10	5'
14"	R1114-XX	B0100-XX	P0112-XX	59"	D0126-00	L0775-10	5'
16"	R1116-XX	B0100-XX	P0112-XX	59"	D0126-00	L0775-10	5'
18"	R1118-XX	B1500-XX	P0116-XX	67.9"	D0127-00	L0776-10	6'
20"	R1120-XX	B1500-XX	P0116-XX	67.9"	D0127-00	L0776-10	6'
24"	R1124-XX	B1500-XX	P0116-XX	67.9"	D0127-00	L0776-10	6'
30"	R1130-XX	B1500-XX	P0145-XX	67.9"	D0127-00	L0776-10	6'
34"	R1134-XX	B1500-XX	P0146-XX	67.9"	D0127-00	L0776-10	6'
36"	R1136-XX	B1500-XX	P0146-XX	67.9"	D0127-00	L0776-10	6'

PLEASE HAVE THE METER SERIAL NUMBER WHEN ORDERING REPLACEMENT PARTS

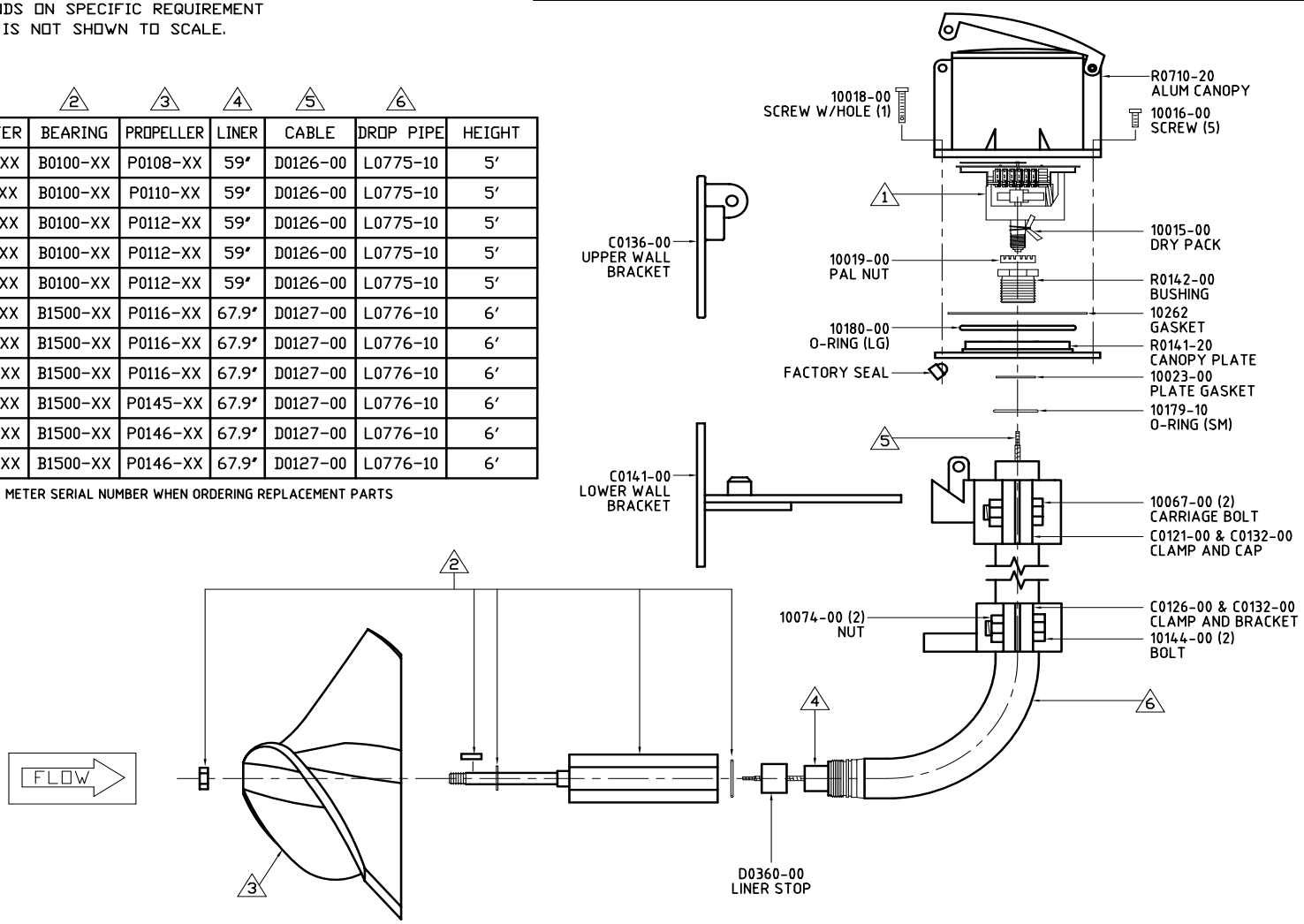

THIS DOCUMENT CONTAINS PROPRIETARY INFORMATION AND MAY NOT BE DISCLOSED TO OTHERS FOR ANY PURPOSE, NOR USED FOR MANUFACTURING PURPOSES WITHOUT WRITTEN PERMISSION FROM MCCROMETER, INC.

REV 3 | 4-9-2007 JMC | Page 1 of 1

McCROMETER
www.mccrometer.com
3255 WEST STETSON AVENUE • HEMET, CALIFORNIA 92545 USA
TEL: 951-652-6811 • 800-220-2279 • FAX: 951-652-3078

Printed In The U.S.A Lit. # 24517-11 Rev. 3.4/02-09

Copyright © 1997-2009 McCrometer, Inc. All printed material should not be changed or altered without permission of McCrometer. Any published technical data and instructions are subject to change without notice. Contact your McCrometer representative for current technical data and instructions.

MM803 THRU MM816

McCROMETER

FILE: 24517-11-13.dwg

DESC 8" THRU 24" DOWN-FLOW METERS

BY	CEH	DATE	9-30-1993	APP	EDM	DATE	4-10-2007

NOTES:
1. XX DEPENDS ON SPECIFIC REQUIREMENT
2. DRAWING IS NOT SHOWN TO SCALE.

	1	2	3	4	5	6	7	8	DIMENSIONS		
SIZE	REGISTER	BEARING	PROPELLER	LINER	CABLE	BOLTS	O-RING	TOP PLATE	A	B	C
3"	R1103-XX	B0700-XX	P0103-XX	9.63"	11.62"	10049-10 (6)	10152-10	L0145-20	22.50"	5"	12.25"
4"	R1104-XX	B0600-XX	P0104-XX	15.75"	18.13"	10103-00 (6)	T0390-00	L0325-30	27.88"	6.50"	16.63"
6"	R1106-XX	B0100-XX	P0106-XX	16.25"	18.63"	10103-00 (8)	T0390-10	L0326-20	29.88"	8"	18"
8"	R1108-XX	B0100-XX	P0108-XX	22"	24"	10103-00 (8)	T0390-10	L0327-10	36.38"	9"	23"
10"	R1110-XX	B0100-XX	P0110-XX	27"	29.19"	10050-00 (12)	T0399-10	L0328-30	42.38"	11"	28"
12"	R1112-XX	B0100-XX	P0112-XX	32.25"	34.63"	10050-00 (12)	T0399-11	L0328-30	48.38"	12"	33"
14"	R1114-XX	B0100-XX	P0112-XX	37.25"	39.63"	10050-00 (16)	T0399-11	L0330-20	54"	14"	38"
16"	R1116-XX	B0100-XX	P0112-XX	42.25"	44.63"	10050-00 (16)	T0399-11	L0331-20	60"	15"	43"

PLEASE HAVE THE METER SERIAL NUMBER WHEN ORDERING REPLACEMENT PARTS

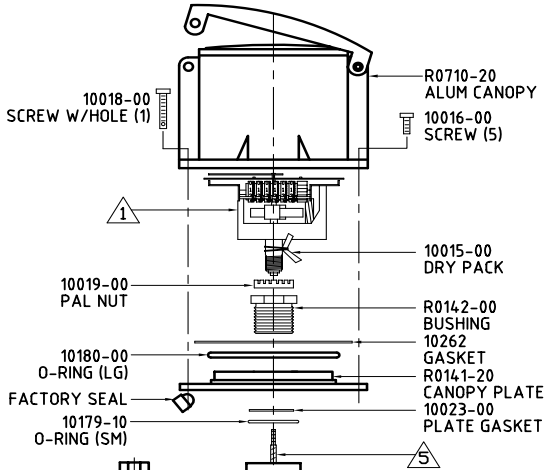

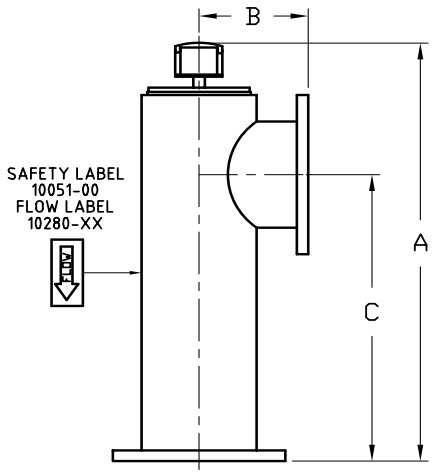

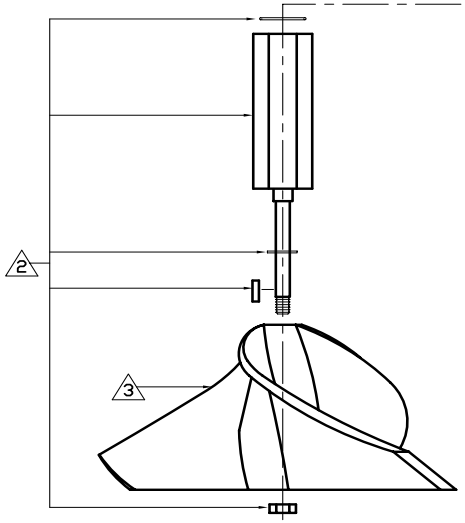

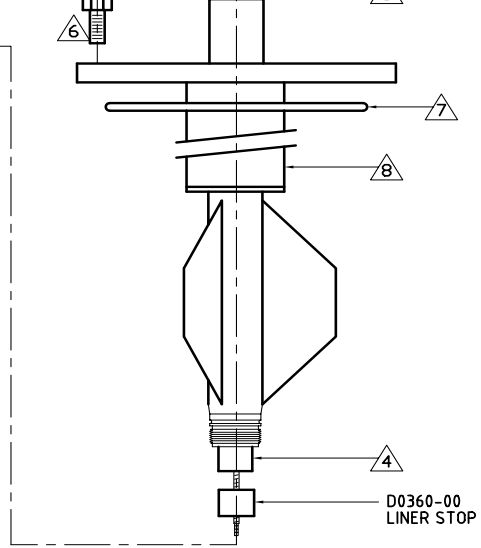

THIS DOCUMENT CONTAINS PROPRIETARY INFORMATION AND MAY NOT BE DISCLOSED TO OTHERS FOR ANY PURPOSE, NOR USED FOR MANUFACTURING PURPOSES WITHOUT WRITTEN PERMISSION FROM MCCROMETER, INC.

REV	3	4-10-2007 JMC	Page 1 of 1

McCROMETER
www.mccrometer.com
3255 WEST STETSON AVENUE • HEMET, CALIFORNIA 92545 USA
TEL: 951-652-6811 • 800-220-2279 • FAX: 951-652-3078
Printed In The U.S.A Lit. # 24517-11 Rev. 3.4/02-09

Copyright © 1997-2009 McCrometer, Inc. All printed material should not be changed or altered without permission of McCrometer. Any published technical data and instructions are subject to change without notice. Contact your McCrometer representative for current technical data and instructions.

MW803 THRU MW824

McCROMETER

FILE: 24517-11-14.dwg

DESC 8" THRU 24" UP-FLOW METERS

BY	CEH	DATE	9-28-1993	APP	EDM	DATE	4-10-2007

NOTES:
1. XX DEPENDS ON SPECIFIC REQUIREMENT
2. DRAWING IS NOT SHOWN TO SCALE.

	1	2	3	4	5	6	7	8	DIMENSIONS		
SIZE	REGISTER	BEARING	PROPELLER	LINER	CABLE	BOLTS	O-RING	TOP PLATE	A	B	C
3"	R1103-XX	B0700-XX	P0103-XX	5.75"	7.75"	10049-10 (6)	10240-00	L0145-10	22.50"	5"	12.25"
4"	R1104-XX	B0600-XX	P0104-XX	7.38"	9.38"	10103-00 (6)	T0390-00	L0147-10	27.88"	6.50"	16.63"
6"	R1106-XX	B0100-XX	P0106-XX	8.75"	10.75"	10103-00 (8)	T0390-10	L0148-10	29.88"	8"	18"
8"	R1108-XX	B0100-XX	P0108-XX	12.25"	14.25"	10103-00 (8)	T0390-10	L0149-10	36.38"	9"	23"
10"	R1110-XX	B0100-XX	P0110-XX	15.25"	17.25"	10050-00 (12)	T0399-10	L0150-10	42.38"	11"	28"
12"	R1112-XX	B0100-XX	P0112-XX	18.25"	20.25"	10050-00 (12)	T0399-10	L0151-10	48.38"	12"	33"
14"	R1114-XX	B0100-XX	P0112-XX	20.88"	22.88"	10050-00 (16)	T0399-11	L0152-10	54"	14"	38"
16"	R1116-XX	B0100-XX	P0112-XX	21.75"	23.75"	10050-00 (16)	T0399-11	L0153-10	60"	15"	43"
18"	R1118-XX	B1500-XX	P0116-XX	23.75"	25.75"	10099-00 (16)	T0399-11	L0154-10	66"	16.50"	48"
20"	R1120-XX	B1500-XX	P0116-XX	25.75"	27.75"	10099-00 (16)	T0399-11	L0155-10	72.50"	18"	53.50"
24"	R1124-XX	B1500-XX	P0116-XX	42"	44"	10099-00 (16)	T0399-11	L0156-10	84.50"	22"	63.50"

PLEASE HAVE THE METER SERIAL NUMBER WHEN ORDERING REPLACEMENT PARTS

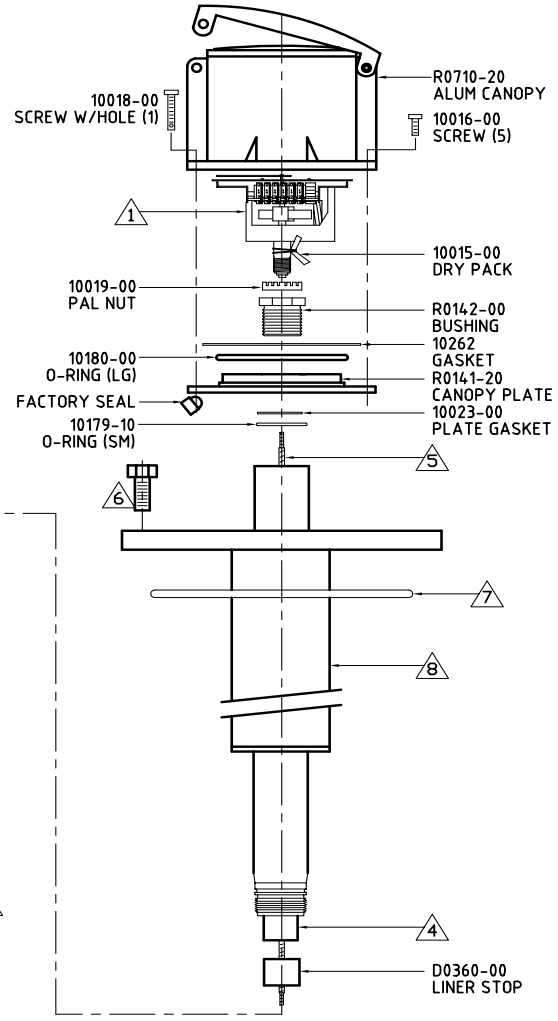

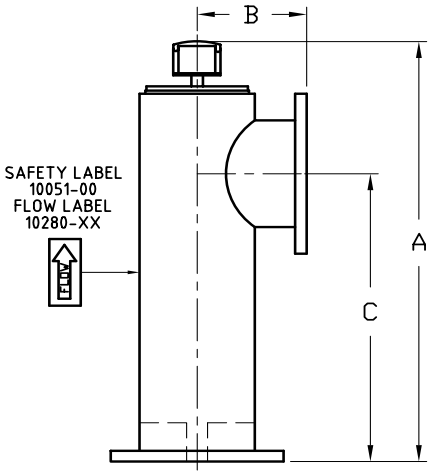

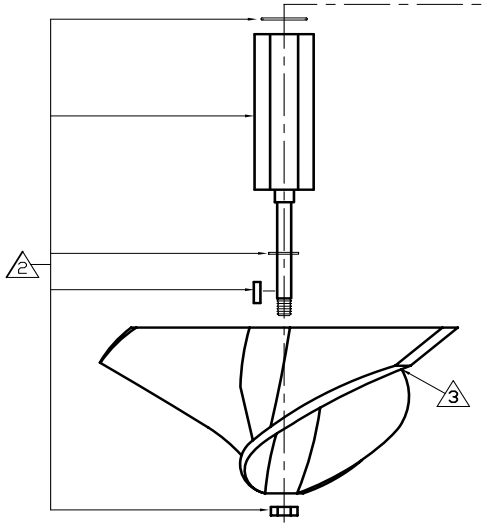

THIS DOCUMENT CONTAINS PROPRIETARY INFORMATION AND MAY NOT BE DISCLOSED TO OTHERS FOR ANY PURPOSE, NOR USED FOR MANUFACTURING PURPOSES WITHOUT WRITTEN PERMISSION FROM MCCROMETER, INC.

REV	5	4-10-2007 JMC

McCROMETER
www.mccrometer.com
3255 WEST STETSON AVENUE • HEMET, CALIFORNIA 92545 USA
TEL: 951-652-6811 • 800-220-2279 • FAX: 951-652-3078

Printed In The U.S.A Lit. # 24517-11 Rev. 3.4/02-09

Copyright © 1997-2009 McCrometer, Inc. All printed material should not be changed or altered without permission of McCrometer. Any published technical data and instructions are subject to change without notice. Contact your McCrometer representative for current technical data and instructions.

OTHER McCROMETER PRODUCTS INCLUDE:

ULTRA MAG®	Magnetic Flowmeters
MARSH MULTI•MAG™	Magnetic Flowmeters
MARSH SINGLE•MAG™	Magnetic Flowmeters
Propeller Meter	Propeller Flowmeters
Mc SpaceSaver™	Flowmeters And Flow Straighteners
FlowCom™ Register DIGITAL DATA & COMMUNICATIONS	For Propeller Flowmeters
WATER SPECIALTIES PROPELLER METER™	Propeller Flowmeters
V2 System™ The Space Saver Solution	Differential Pressure Flowmeters
VCONE®	Differential Pressure Flowmeters
Wafer-Cone®	Differential Pressure Flowmeters

Electronic Instrumentation for Remote Display and Control

FOR MORE INFORMATION CONTACT:

McCROMETER
www.mccrometer.com

3255 WEST STETSON AVENUE • HEMET, CALIFORNIA 92545 USA
TEL: 951-652-6811 • 800-220-2279 • FAX: 951-652-3078
Printed In The U.S.A Lit. # 24517-11 Rev. 3.4/02-09

Copyright © 1997-2009 McCrometer, Inc. All printed material should not be changed or altered without permission of McCrometer. Any published technical data and instructions are subject to change without notice. Contact your McCrometer representative for current technical data and instructions.

Great Plains Inc.: Product Meter – 03N31GM

ELECTRONIC DIGITAL METER

03 Series Owner's Manual

5252 East 36th Street North
Wichita, KS USA 67220-3205
TEL: 316-686-7361
FAX: 316-686-6746

GREAT PLAINS INDUSTRIES, INC.
"A Great Plains Ventures Subsidiary"
www.gpi.net
1-800-835-0113

07/08

Rev. B 920685-09

To the owner…

Congratulations on receiving your GPI Electronic Digital Meter. We are pleased to provide you with a meter designed to give you maximum reliability and efficiency.

Our business is the design manufacture, and marketing of liquid handling, agricultural, and recreational products. We succeed because we provide customers with innovative, reliable, safe, timely, and competitively-priced products. We pride ourselves in conducting our business with integrity and professionalism.

We are proud to provide you with a quality product and the support you need to obtain years of safe, dependable service.

President
Great Plains Industries, Inc.

TABLE OF CONTENTS

General Information 1
Introduction 2
Before Installation 2
Installation 3
Operations 4
Calibration 6
Maintenance 10
Troubleshooting 12
Specifications 14
Parts 16
Service 16

GENERAL INFORMATION

This manual will assist you in operating and maintaining your 03 Series meter. Differences in models are detailed in the Specifications Section of this manual. Please take a few moments to read through this manual before installing or operating your meter. If you need assistance, contact the dealer from whom you purchased your meter.

If You Measure in Litres

This manual commonly refers to "gallons." Your meter is factory calibrated in gallons and litres, consider all references to "gallons" apply equally to "litres."

This symbol is used throughout the manual to call your attention to safety messages.

⚠ WARNING **Warnings** alert you to the potential for personal injury.

⚠ CAUTION **Cautions** call your attention to practices or procedures which may damage your meter.

Notes give you information that can improve efficiency of operations.

It is your responsibility to make sure that all operators have access to adequate instructions about safe operating and maintenance procedures.

Safety Instructions

For your safety, review the major warnings and cautions below before operating your meter.

1. This meter is approved to handle only fluids which are compatible with the meter's housing material.
2. When metering flammable liquids, observe precautions against fire or explosion.

3. When handling hazardous liquids, always follow the liquid manufacturer's safety precautions.
4. Always dispose of used cleaning solvents in a safe manner according to the solvent manufacturer's instructions.
5. During meter removal, liquid may spill. Follow the liquid manufacturer's safety precautions to clean up minor spills.
6. Do not blow compressed air through the meter.
7. Do not submerge the meter.
8. Do not allow liquids to dry inside the meter.
9. Do not use a wrench to install plastic meters. Hand tighten only.
10. For best results, always verify calibration before use.

INTRODUCTION

Your Electronic Digital Meter is designed for measuring liquids. The meter translates pulse data from the turbine into calibrated flow units shown on the meter's readout. Field replaceable batteries provide power.

All meters are tested and factory calibrated before shipping.

This manual refers to three families of meters: Low Flow, One Inch, and Two Inch. To further identify your particular model, refer to the Specifications Section at the end of this manual.

BEFORE INSTALLATION

Upon receipt, examine your meter for visible damage. Remove protective plugs and caps for a thorough inspection. If any items are damaged or missing, contact your distributor.

Make sure the meter model meets your specific needs. Refer to the Specification Section and confirm the following:

1. Your flowrate is within the limits of your model.
2. Your liquid is compatible with your meter's material.
3. Your system's pressure does not exceed the meter's maximum pressure rating.

Quick Start

If your installation is relatively simple and you have installed our Electronic Digital Meter (EDM) meters before, you may use this section to quickly install and operate your meter. This section is especially helpful to those measuring thin viscosity fluids dispensed through a hose and nozzle.

If you complete this section and encounter difficulties, please refer to other sections, as necessary.

NOTE: To accommodate different installations, the faceplate can be rotated 180°. To do this, remove the four corner screws from the face of the meter and lift the computer assembly from the turbine. Rotate the computer assembly 180°. Place on the turbine ensuring the seal is fully seated. Secure the four screws.

Connections

1. To protect against leakage, make sure all threads are sealed with two or three turns of thread tape or a sealing compound compatible with the liquid being metered. (Figure 1)

Figure 1

⚠ CAUTION

Make sure the thread tape or sealing compound does not interfere with flow.

2. Make sure the arrow on the outlet is pointing in the direction of the flow. (Figure 2)

Figure 2

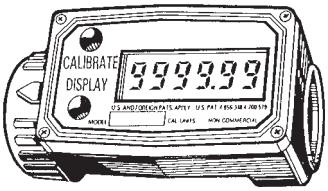

3. Tighten the meter onto the fittings. Use a wrench only on metal meters. Hand tighten plastic meters.

⚠ CAUTION

Using a wrench on plastic meters could damage the meter.

Verify Meter Accuracy

Before using, you should check the meter's accuracy and verify calibration.

1. Make sure there is no air in the system by starting the flow until it runs steadily. Then, stop the flow using a valve or nozzle.
2. If desired, hold down DISPLAY for 3 seconds to zero the meter's Batch Total. When zeros appear, release the button.
3. Meter an exact known volume into an accurate container. For best results, meter with one continuous full stream.
4. Check the readout. If the amount metered is accurate, field calibration is not necessary. If not, refer to the Calibration Section for further instructions.

Using the Meter

The meter turns on automatically when fluid flow starts and, to conserve power, turns off automatically shortly after flow stops.

The meter can also be turned on manually by pressing and releasing the DISPLAY button.

To determine the exact volume measured with each use, use the Batch Total function. You can zero the Batch Total before measuring and monitor volume as it flows through the meter, just like the gas pump at the service station as you fill up your tank.

To zero the Batch Total, make sure the meter is on. Hold down the DISPLAY button for 3 seconds until zeros appear. Release the button, start the flow, and watch the volume on the readout.

NOTE: If LOCKED appears on the readout, the Cumulative Total is displayed. It cannot be manually zeroed. To select the Batch Total, press and release DISPLAY until LOCKED does not appear on the bottom line.

If the numbers in the readout are dim or fading, the batteries need replacement. Refer to the Maintenance Section for more details.

INSTALLATION

Review the Before Installation and Quick Start Sections. Also consider the following recommendations, especially if you are installing your meter in a piping system. These suggestions will help maximize performance of your meter.

The meter can be mounted either vertically or horizontally. It should be field calibrated in the same orientation in which it is mounted.

Avoid installing the meter in electrically "noisy" environments. If installed within 6 inches (15.2cm) of large motors, relays,

vehicle ignition systems, or transformers, the meter's accuracy can be adversely affected.

To avoid pulsation or swirl, use the following recommendations.

For Low Flow or One Inch Meters, install with

- 20 inches (51cm) of straight pipe upstream and
- 5 inches (13cm) of straight pipe downstream.

For Two Inch Meters, install with

- 40 inches (102cm) of straight pipe upstream and
- 10 inches (26cm) of straight pipe downstream.

Flow straightening vanes installed upstream from the meter can reduce the upstream pipe length.

Flow control valves upstream from the meter and within the straight pipe distances given earlier can adversely effect meter accuracy. This is especially true when measuring liquids with low vapor pressures such as fuels, oils and solvents.

If cavitation effects meter accuracy, a flow control valve on the downstream side of the meter can provide a back pressure of 5 to 50 PSI (0.3 to 3.4 bar) to minimize the problem.

Foreign material in liquid can clog the meter's rotor. If the problem affects meter accuracy or material coats the rotor, install screens to filter the incoming flow.

- For Low Flow Meters use a 25 micron or .005 inch screen, 55 mesh.
- For One Inch or Two Inch Meters use a 500 micron or .018 inch screen, 28 mesh.

For maximum accuracy, the velocity profile of the flow entering the meter must be uniform throughout the cross section of the pipe.

OPERATIONS

All meter operations are reflected in the readout on the face of the meter. The readout contains three lines of information. They are generally defined as follows:

- The top line identifies the calibration curve,
- The middle line reflects flow information, and
- The bottom line shows information from the totalizer.

The words or "flags" that display on the top and bottom line further identify specific information.

Turn On

The meter is on when any display is present. It turns on automatically when liquid flows through the meter. It can be turned on manually by pressing and releasing the DISPLAY button.

Turn Off

The meter turns off automatically shortly after flow stops. When the meter is off, the readout is blank.

Batch and Cumulative Totals

Total flags are displayed on the bottom line. There are two types of totals: Batch Total and Cumulative Total.

A Batch Total indicates totalization flow during a single use. It is the total liquid metered since the last manual clearing of this total. For example, the Batch Total indicates when you have metered 20 gallons of diesel into your truck's tank (like the pump at the gas station).

Batch Total is labeled with TOTAL followed by a number. On most models this is TOTAL 2.

The Cumulative Total is the total of all liquid measured since the meter's power supply was connected. At your first use, the Cumulative Total is not zero because of calibration at the factory.

The Cumulative Total is labeled TOTAL 1 and **always** flagged with the word LOCKED indicating that this total is locked and cannot be manually zeroed. (Figure 3)

Figure 3

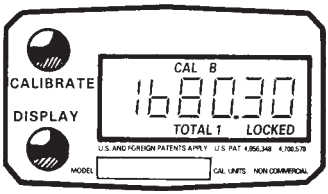

Select Totals

To change between totals, press and release DISPLAY.

NOTE: Generally, readout displays change when buttons are **released**.

Clear Batch Total

Make sure a Batch Total is displayed. To clear, press and hold DISPLAY for 3 seconds or until the readout changes to zeros.

Clear Cumulative Total

Cumulative Totals are zeroed only when batteries are removed or go dead or when the Cumulative Total reaches the maximum value of 999,999.

Calibration Curves

Calibration Curve information is shown on the top line of the readout. There are two types of calibration curves: Field Calibration and Factory Calibration.

A Field Calibration Curve is set by the user. It can be changed or modified at any time using procedures given in the Calibration Section.

If a Field Calibration has not been completed, the meter uses the Factory Calibration.

A Factory Calibration Curve is "preset" by the manufacturer and stored permanently in the meter's computer. Factory Calibration curves display PRESET on the top line.

Select Calibration Curves

To change between a Field Calibration curve and a Factory Calibration curve, hold CALIBRATE down while pressing and releasing DISPLAY. When the desired calibration curve appears, release both buttons.

NOTE: In this case, the CALIBRATE button acts like a "Shift" key on a typewriter, shifting the operations of the DISPLAY button to change the top line of the readout.

Field Calibration is labeled with CAL followed by a letter. On most models this is CAL B.

All units are configured with a "factory" calibration curve. Both gallons and litres are available ("GAL" or "LTR" will be displayed). Use the CALIBRATE and DISPLAY buttons to switch between gallons and litres. This curve is NOT user adjustable: the word "PRESET" is displayed to show this (Figure 4). The factory calibration is stored permanently in the computer's memory.

Figure 4

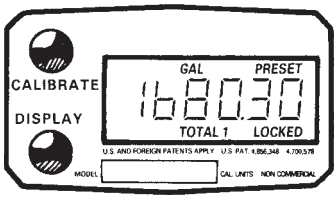

The "field" calibration curve(s) may be set by the user, and can be changed or modified at any time using the calibration procedure described in the Calibration section.

Selecting a Different Calibration Setting

You can switch between GAL or LTR modes at will without "corrupting" totalizer contents. For example, the computer can totalize 10.00 gallons. If the user switches to LTR mode, the display will immediately change to "37.85" (the same amount in units of litres).

To select a different calibration setting, first press and hold the CALIBRATE button. Continue to hold it while also briefly pressing and releasing the DISPLAY button (you may then also release the CALIBRATE button). The flag indicators in the upper area of the display will change to show the newly selected calibration setting. Calibration settings change in this order: GAL, LTR, CAL B, GAL (etc.). While fluid is flowing only the GAL and LTR selections may be made, however, when NO fluid flow is occurring, any setting may be selected.

Propeller

Any time liquid flows through the meter, a small propeller displays.

Normal Precautions

Check the following items frequently to insure proper operation and measurement.

1. Make sure there are no leaks in the connections. To seal leaks, remove and inspect the meter and replace the thread tape or sealant. Refer to the Troubleshooting Section.
2. A dim or fading readout indicates loss of power. To restore power, replace the batteries and check for corrosion on the battery terminals. Refer to the Maintenance Section.
3. Verify meter accuracy before use. To do this, measure a known quantity of liquid into a calibration container and compare the volume measured against the readout. If necessary, field calibrate the meter. Refer to the Calibration Section.
4. To ensure accurate measurement, remove all air from the system before use. To purge the system of air:
   a. Open the discharge valve or nozzle and allow fluid to completely fill the system. Make sure the stream is full and steady and no air is present.
   b. Close the discharge valve or nozzle. Leave the system on.
   c. Start normal operations. If necessary, zero the Batch Total.

⚠ WARNING

If handling hazardous liquids, always follow the liquid manufacturer's safety precautions. Wear protective clothing such as goggles, gloves, and respirators as instructed.

⚠ WARNING

When metering flammable liquids, observe precautions against fire or explosion. Do not meter in the presence of any source of ignition including running or hot engines, lighted cigarettes, or gas or electric heaters.

CALIBRATION

The two types of calibration are Field Calibration and Factory Calibration. These are defined in the Operation Section. This section deals with the Field Calibration specifics and procedures. It also gives more specific information about Factory Calibration.

Field Calibration is necessary when Factory Calibration accuracy is not acceptable.

Factory Calibration is completed with a thin viscosity liquid. If you are dispensing liquid which has a different uniform viscosity, a Field Calibration can improve meter accuracy. If your liquid is very thick, multiple points at different flowrates can improve accuracy.

Calibration Container

The desired calibration container should be uniformly dependable and constructed with a graduated neck. The container's volume indicator should be clearly and precisely marked. It is helpful if the container's material allows a window through which the level of liquid can be viewed.

Two Inch Meter Field Calibration

Due to high flowrate, the Field Calibration of 2" meters should be considered carefully. It is strongly recommended that Field Calibration of these meters be completed with a combination of volume and weight. Only fine resolution scales should be used.

Before Starting Field Calibration

For successful Field Calibration, please review the following before beginning.

For most accurate results, dispense at full flow. Quickly start and stop at full flow as many times as necessary to reach the desired volume. Do not "choke" or "trickle" the flow to reach that volume.

Use an accurate calibration container.

Meet the meter's minimum requirements for flowrate.

- Low Flow minimum calibration flowrate is 0.3 GPM (1.5 LPM).
- One Inch minimum calibration flowrate is 3 GPM (12 LPM).
- Two Inch minimum calibration flowrate is 30 GPM (114 LPM).

Use the correct button sequence during the calibration procedure.

Install your meter on your system according to the installation instructions given earlier in this manual.

Immediately prior to calibration, purge the system of air by turning on the system and dispensing until the flow stream is full and steady. Stop the flow, but leave the system running.

Dispense-Display Field Calibration Procedures

Your Actions	Notes
1. Hold down CALIBRATE while pressing and releasing DISPLAY until the Field Calibration curve appears ("CAL B" message will be displayed). Release both buttons. 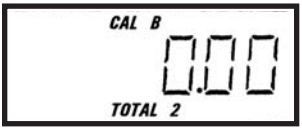 	Remember that Field Calibration curves are not preset.
2. To calibrate, press and hold the CALIBRATE button. While continuing to hold CALIBRATE, also press and hold the DISPLAY button. Hold both buttons for about 3 seconds until you see a "dd CAL" message. Once the "dd CAL" message appears, release both buttons. You are now in field calibration mode.	This step puts the unit in dispense-display field calibration mode ("dd CAL").

Your Actions	Notes
3. Once the buttons have been released from Step 2, the display will show the blinking message “run 01.” 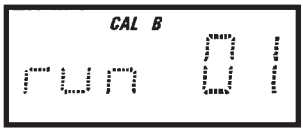	The computer is waiting for you to make a decision to either exit from field calibration mode or to begin a dispense run. If you want to exit the calibration now, go to Step 10.
4. If you want to continue with the calibration, but have not dispensed any fluid yet, make your final preparations to your pumping system, but don’t start pumping yet.	
5. Start your pumping system so that fluid flows through the meter. The display will stop blinking and show the “run 01” message. Dispense into a container that allows you to judge the amount of fluid pumped. When you have pumped the desired amount (for example, 10 gallons), stop the fluid flow quickly. 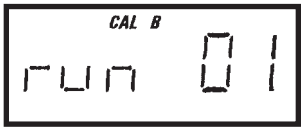	When the computer displays a non-blinking “run 01” message, it is sensing fluid flow. For accurate results, dispense at a flowrate which best simulates your actual operating conditions. Avoid “dribbling” more fluid or repeatedly starting and stopping the flow - these actions will result in less accurate calibrations.
6. Once the flow has stopped, briefly press and release both buttons. At this point the computer display will change to “0000.00” with the left-hand digit blinking.	When the display shows “0000.00” the computer has stopped “watching” for fluid flow and is now waiting for you to enter some numbers.
7. Enter the volume (amount) of fluid that you dispensed (for example, if your 10-gallon container is full, enter “10.00” for gallons or “37.85” for litres). To enter numbers use the CALIBRATE button to change the value of the digit that is blinking and use the DISPLAY button to shift the “blink” to the next digit.	

Your Actions	Notes
8. Once the correct number has been entered, briefly press and release both buttons. The display will change to a blinking “run 02” message. 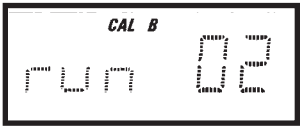	You have installed the new cal-curve point. You are ready to end calibration (Step 10) or enter another new calibration point (Step 9).
9. To enter another calibration point, go back and repeat Steps 3 through 8. Or, to end calibration now, proceed with Step 10.	It is possible to set up to 15 cal-curve points, and the “run ##” message will increment each time you repeat the calibration process (run 01, run 02, run 03, etc., up to run 15).
10. To end calibration, press and hold both buttons for 3 seconds until you see “CAL End” message.	After you release the buttons, the computer will resume normal operations. If Run 01 was showing and you have not dispensed any fluid, the old cal curve is till intact. However, if you have dispensed any fluid the new curve will be active.

Factory Calibration

Factory Calibration curves are set at the factory for measuring liquids in gallons and litres and always display PRESET on the readout. This calibration is permanently stored in the meter's computer and provides calibration information for the meter unless Field Calibration is completed.

MAINTENANCE

During daily use, these meters are virtually maintenance-free.

When not in use, rinse and clean and keep free of liquids to protect internal components. If liquids have dried and caked on the rotor, refer to the Cleaning instructions.

Beware of a dim or fading readout. This condition indicates potential battery failure. Refer to the Battery instructions.

Batteries

Your meter is equipped with field replaceable lithium batteries that provide power for approximately 9,000 hours. Replacement batteries can be ordered from the factory.

If the meter's readout should become dim or blank, it is an indication that the batteries should be replaced.

When batteries are disconnected or fail, the Batch and Cumulative Totals return to zero.

Factory and Field Calibrations are **NOT** lost when batteries are replaced or power is lost. They are saved in the meter's computer and are available after new batteries are installed. You do not need to repeat Field Calibration.

Check the batteries and terminals at least every year to ensure proper operation. It is strongly recommended that terminals be cleaned annually.

NOTE: Batteries can be replaced without removing meter from the hose or pipe.

To replace batteries or clean terminals:

1. Remove the corner screws from the face of the meter and lift the computer assembly from the turbine.
2. Remove the batteries. (Figure 5)

Figure 5

3. If necessary, clean any corrosion from the battery terminals.
4. Place the batteries in position, with the positive posts in the correct position. (Figure 6)

Figure 6

When the batteries are installed correctly, the computer powers on automatically. Check the readout to make sure normal meter functions have resumed before assembling again.

5. Place the computer assembly on the turbine. Make sure the seal is fully seated to avoid moisture damage. Secure with the four screws.

To Remove

⚠ WARNING

During meter removal, liquid may spill. Follow the liquid manufacturer's safety precautions for clean up of minor spills.

1. Ensure all liquid is drained from the meter. This could include draining the hose, meter, nozzle or pipe.
2. Wear protective clothing as necessary, loosen both ends of the meter. Use a wrench only on the meter's flat metal surfaces.

⚠ CAUTION

Using a wrench on plastic meters could damage the meter.

3. If the meter is not immediately installed again, cap the hose end or pipe to prevent spills.

To Clean

During use, the meter should be kept full of liquid to ensure that drying does not occur inside the meter. If drying or caking should occur, the rotor will stick or drag, affecting accuracy. In this circumstance, cleaning is required.

To determine if the rotor is stuck or dragging, gently blow air through the meter and listen for the quiet whir of the rotor.

⚠ CAUTION

Never blow compressed air through the meter. It could damage the rotor.

To clean a stuck or dragging rotor, follow the procedures below.

1. Remove the meter from the hose or pipe following the directions above.
2. Apply a penetrating lubricant such as WD-40® or a recommended cleaning solvent on the turbine's rotor, shaft and bearings. Allow it to soak for 10 to 15 minutes.

⚠ CAUTION

Do not submerge the meter.

3. Carefully remove residue from the rotor using a soft brush or small probe such as a screwdriver. Be careful not to damage the rotor and support.
4. When the rotor turns freely, install it again following the Installation instructions provided in this manual.

To Store

After thoroughly cleaning the meter, store it in a dry location.

⚠ WARNING

Follow the liquid manufacturer's instructions for the disposal of contaminated cleaning solvents.

TROUBLESHOOTING

SYMPTOM	PROBABLE CAUSE	CORRECTIVE ACTION
A. METER IS NOT ACCURATE	1. Field Calibration not performed properly	Field calibrate again or select Factory Calibration.
	2. Factory Calibration not suitable for liquid being measured	Perform a Field Calibration according to Calibration Section.
	3. Meter operated below minimum flowrate	Increase flowrate. See Specifications Section.
	4. Meter partially clogged with dried liquid	Remove meter. Clean carefully with WD-40® or similar penetrating lubricant. Make sure rotor spins freely.
	5. Turbine bearings partially clogged with dried liquid	Remove meter. Lubricate bearings with WD-40® or similar penetrating lubricant through small holes in turbine supports. Make sure rotor spins freely.
	6. Teflon® tape or other material wrapped around rotor	Remove meter. Clear material from rotor. Make sure rotor spins freely.
	7. Installed too close to fittings	Install correctly. See Installation Section.
	8. Installed too close to motors or electrically "noisy" environment	Install correctly. See Installation Section.
B. READOUT FADED OR BLANK	1. Batteries weak, dead or not connected	Remove computer and replace batteries. Install computer again, making sure that the seal seats evenly around the computer and turbine housing.
	2. Computer defective	Contact the factory.
C. NORMAL FLOW RATE BUT METER DOES NOT COUNT (Meter comes on when DISPLAY button pushed.)	1. Field Calibration not performed correctly	Field calibrate again or select Factory Calibration.
	2. Rotor stuck or damaged	Remove meter. Lubricate turbine bearings with WD-40® or similar penetrating lubricant through small holes in turbine supports. Make sure rotor spins freely. If rotor cannot be loosened, contact the factory.

SYMPTOM	PROBABLE CAUSE	CORRECTIVE ACTION
C. (continued)	3. Teflon® tape or other material wrapped around rotor	Remove meter. Clear material from rotor. Make sure rotor spins freely.
	4. Computer defective	Contact the factory.
D. REDUCED FLOWRATE & METER DOES NOT COUNT (Meter comes on when DISPLAY button pushed.)	1. Meter clogged with dried liquids	Remove meter. Clean carefully with WD-40® or similar penetrating lubricant. Make sure rotor spins freely.
E. CANNOT GET METER INTO FIELD CALIBRATION	1. Factory Calibration (PRESET) curve active	Hold down CALIBRATE and push and release DISPLAY until PRESET flag goes off. Proceed with calibration according to the Calibration Section.
	2. Computer circuit board defective	Replace computer. Contact the factory.
F. METER CONNECTIONS LEAK	1. Meter installed without thread sealant	Remove meter. Wrap male connections with 3 to 4 wraps of thread tape or compatible sealing compound. Install again.
	2. Connecting threads damaged	Remove meter and inspect threads. Replace damaged connections. If meter threads are damaged, contact the factory.
	3. Meter housing	Inspect housing for cracks. If cracks present, contact the factory.

SPECIFICATIONS

The following specifications apply to all models and materials.

Power Source:
Two lithium batteries provide approximately 9,000 hours of use (1 year)

Operating Temperature:
+14° to +140° F (-10° to +60° C)
(For temperatures up to 250°F, contact factory)

Storage Temperature:
-40° to +158° F (-40° to +70° C)

Accuracy:
Low Flow Models:
Factory Calibration: N/A*
Field Calibration: ±1.5% of reading
(Low Flow meters must be field calibrated)

1-inch and 2-inch Models:
Factory Calibration: ±1.5% of reading
Field Calibration: ±1.0% of reading

Filter Screens:
Low Flow Models:
Use a 25 micron or .005 inch screen, 55 mesh.

1-inch and 2-inch Models:
Use a 500 micron or .018 inch screen, 28 mesh.

Wetted Materials:
Rotor & Supports: Nylon
Signal Generators: Ferrite
Shaft: Tungsten Carbide
Journal Bearings: Ceramic
Retaining Rings: Stainless Steel
Housing: Nylon or Aluminum

Turbine Housing/
Rotor Support Materials:
Nylon Housing / Nylon
Aluminum Housing / Nylon

The following specifications are dependent upon housing materials.

Pressure Rating:
Aluminum: 300 PSIG (20.7 bar)
Nylon: 150 PSIG (10.3 bar)

Recommended Chemicals:
Aluminum Models:
Are recommended for use with petroleum products, and should not be used with water. Please verify chemical compatibility with all wetted parts.

Nylon Models:
Are recommended for use with water or non-aggressive chemicals.

** Accuracy can vary up to ±5% depending on installation and fluid type. Field calibration is recommended*

Specifications

	Low Flow Model	1 Inch Model	2 Inch Model
Units	Gallons & Litres	Gallons & Litres	Gallons & Litres
Flow Range	0.3-3 GPM 1-10 LPM	3-50 GPM 10-190 LPM	30-300 GPM 100-1,000 LPM
Threads	NPT	NPT	NPT
Inlet and Outlet	1 inch	1 inch	2 inch
Internal Diameter	1/4 inch	1 inch	2 inch
Design Type	Paddlewheel	Turbine	Turbine
Minimum Readout Total	.01	.01	0.1
Maximum Readout Total	999,999	999,999	999,999
Pressure Drop at Max. Flowrate	2 PSIG @ 3 GPM .14 bar @ 10 LPM	5 PSIG @ 50 GPM .35 bar @ 190 LPM	7 PSIG @ 300 GPM .48 bar @ 1,000 LPM
Dimension - Length - Height - Width	4 in. (10.2cm) 2.5 in. (6.4cm) 2 in. (5.1cm)	4 in. (10.2cm) 2.5 in. (6.4cm) 2 in. (5.1cm)	6 in. (15.2cm) 4.25 in. (10.8cm) 3 in. (7.6cm)

PARTS

Replacement Kits & Accessories

Replacement Kits are available for turbine assemblies and computer assemblies. Individual components within these assemblies, such as rotors, signal generators, and buttons are not available. The factory will determine the exact Turbine Assembly or Computer Assembly you need based on your model and serial number.

Other replacement kits and accessories can be ordered with the part numbers below.

Part No.	Description
113520-1	Battery Replacement Kit
901002-52	Seal
116000-1	Large (5 gallon) Calibration Container
116004-5	Small (5 quart) Calibration Container (Note: Calibration containers are for use with water based fluids. Do not use with fuel products.)

SERVICE

For warranty consideration, parts, or other servicing information, please contact your local distributor. If you need further assistance, call the GPI Customer Service Department in Wichita, Kansas, during normal business hours.

1-800-835-0113

To obtain prompt, efficient service, always be prepared with the following information:

1. The model number of your meter.
2. The serial number of your meter.
3. Specific information about part numbers and descriptions.

For warranty work always be prepared with your original sales slip or other evidence of purchase date.

Returning Parts

Please contact the factory before returning any parts. It may be possible to diagnose the trouble and identify needed parts in a telephone call or letter. GPI can also inform you of any special handling requirements you will need to follow covering the transportation and handling of equipment which has been used to transfer hazardous or flammable liquids.

⚠ CAUTION

Do not return meters without specific authority from the GPI Customer Service Department. Due to strict regulations governing transportation, handling, and disposal of hazardous or flammable liquids, GPI will not accept meters for rework unless they are completely free of liquid residue.

⚠ CAUTION

Meters not flushed before shipment can be refused and returned to the sender.

Declaration of Conformity

Manufacturer's Name:	Great Plains Industries, Inc.
Manufacturer's Address:	5252 East 36th Street North Wichita, KS USA 67220-3205

Declares, that the product:

Product Name:	Electronic Digital Meter
Model Numbers:	03***** A1********** A2********** G2*********

Model numbers include all combinations of an alpha-numeric series as illustrated above.

Conform to the following Standards:

EMC:	EN 50081-1 (Reference EN 55022) EN 50082-1
Energy - Limited Apparatus:	EN 50021
I.P. Code:	BS EN 60529

Supplementary Information:

"The products comply with the requirements of the EMC Directive 89/336/EEC and the ATEX Directive 94/9/EC (ANNEX VIII)."

I, the undersigned, hereby declare that the equipment specified above conforms to the above Directive(s) and Standard(s).

Signature:	Grant Nutter
Full Name:	Mr. Grant Nutter
Position:	President Great Plains Industries, Inc.
Place:	Wichita, KS USA May 2003

The following patent may apply, check your meter.

Patent Number
U.S. Patent 5,046,370.

Limited Warranty Policy

Great Plains Industries, Inc. 5252 E. 36th Street North, Wichita, KS USA 67220-3205, hereby provides a limited warranty against defects in material and workmanship on all products manufactured by Great Plains Industries, Inc. This product includes a 1 year warranty. Manufacturer's sole obligation under the foregoing warranties will be limited to either, at Manufacturer's option, replacing or repairing defective Goods (subject to limitations hereinafter provided) or refunding the purchase price for such Goods theretofore paid by the Buyer, and Buyer's exclusive remedy for breach of any such warranties will be enforcement of such obligations of Manufacturer. The warranty shall extend to the purchaser of this product and to any person to whom such product is transferred during the warranty period.

The warranty period shall begin on the date of manufacture or on the date of purchase with an original sales receipt. This warranty shall not apply if:

A. the product has been altered or modified outside the warrantor's duly appointed representative;
B. the product has been subjected to neglect, misuse, abuse or damage or has been installed or operated other than in accordance with the manufacturer's operating instructions.

To make a claim against this warranty, contact the GPI Customer Service Department at 316-686-7361 or 1-800-835-0113. Or by mail at:

Great Plains Industries, Inc.
5252 E. 36th St. North
Wichita, KS, USA 67220-3205

The company shall, notify the customer to either send the product, transportation prepaid, to the company at its office in Wichita, Kansas, or to a duly authorized service center. The company shall perform all obligations imposed on it by the terms of this warranty within 60 days of receipt of the defective product.

GREAT PLAINS INDUSTRIES, INC., EXCLUDES LIABILITY UNDER THIS WARRANTY FOR DIRECT, INDIRECT, INCIDENTAL AND CONSEQUENTIAL DAMAGES INCURRED IN THE USE OR LOSS OF USE OF THE PRODUCT WARRANTED HEREUNDER.

The company herewith expressly disclaims any warranty of merchantability or fitness for any particular purpose other than for which it was designed.

This warranty gives you specific rights and you may also have other rights which vary from U.S. state to U.S. state.

Note: In compliance with MAGNUSON MOSS CONSUMER WARRANTY ACT – Part 702 (governs the resale availability of the warranty terms).

FM APPROVED CE CLASSIFIED UL

Ex ATEX NEMA 4 (IP44)

5252 East 36th Street North
Wichita, KS USA 67220-3205
TEL: 316-686-7361
FAX: 316-686-6746

GREAT PLAINS INDUSTRIES, INC.
"A Great Plains Ventures Subsidiary"
www.gpi.net
1-800-835-0113

GPI is a registered trademark of Great Plains Industries, Inc.
© 2008 by GREAT PLAINS INDUSTRIES, INC., Wichita, KS.

07/08 Printed in U.S.A. Rev. B 920685-09