PETROLEUM STORAGE TANK RELEASE TRUST FUND

LIMITED SITE ASSESSMENT

REQUEST FOR PROPOSAL

Kansas Department of Health and Environment

Bureau of Environmental Remediation

Storage Tank Section

TABLE OF CONTENTS

SECTION 1.0

PROPOSAL PROCESS INFORMATION 1

SECTION 2.0

CONTRACT INFORMATION 6

SECTION 3.0

STATEMENT OF WORK 9

SECTION 4.0

DELIVERABLES 22

SECTION 5.0

REIMBURSEMENT 40

SECTION 6.0

PROPOSAL AND WORK SPECIFIC DEFINITIONS 42

ATTACHMENTS

ATTACHMENT A . . . . . KDHE Monitoring Well Design
ATTACHMENT B . . . . . .Soil Boring Plugging Criteria KAR 28-30-7(d)
ATTACHMENT C . . . . . Laboratory Methods
ATTACHMENT D . . . . . KDHE Well Tagging Procedure
ATTACHMENT E . . . . . Field Work Plan Worksheet
ATTACHMENT F . . . . . Time Sheets
ATTACHMENT G . . . . . Owner/Operator Standard Contract
ATTACHMENT H . . . . . Borehole Storage Volume Calculations
ATTACHMENT I . . . . . Vendor File Resume
ATTACHMENT J . . . . . Field Work Notification Form

EXHIBITS

EXHIBIT 1 . . . . . Site Specific Information
EXHIBIT 2 . . . . . Project Bid Proposal Sheets

SECTION 1.0PROPOSAL PROCESS INFORMATION

1.1 PURPOSE

On behalf of the Owner/Operator (O/O), the Kansas Department of Health and Environment (KDHE) is soliciting bids from qualified Vendors to implement a pre-approved site assessment plan. The plan is designed to determine the extent of contamination and provide information for later development of the appropriate corrective action for contamination detected at the site.

1.2 OBJECTIVE

1.2.1 To provide information necessary for the preparation of competitive proposals by qualified Vendors.

1.2.2 To provide for a fair and objective evaluation of proposals.

1.2.3 To result in a contract between the O/O and the Vendor to provide the services as described in Sections 3.0 and 4.0 of this Request for Proposal (RFP).

1.3 DEFINITIONS

1.3.1 "Corrective Action" means all action necessary to contain, collect, control, identify, analyze, clean up, treat, disperse, remove, or dispose of soils and groundwater contaminated by a release of petroleum products from a storage tank.

1.3.2 “Field Geologist” is the designated site representative for the vendor. This position works under the direct supervision of the vendor’s designated “Project Geologist” or “Licensed Professional”. Minimum qualifications for this position are:

1) Has a BS degree in Geology from an accredited four year college or a related degree with a minimum of 30 semester hours of geologic course work.
2) Has overseen drilling activities and has described and recorded the subsurface lithology during the drilling of at least 21 boreholes.

1.3.3 "Hazardous substance" shall have the meaning ascribed to such term by Section 101 of the Comprehensive Environmental Response, Compensation and Liability Act (CERCLA) of 1980 of the United States as in effect on January 1, 1992.

1.3.4 “Landscaping Professional” means an individual or company that engages in landscaping activities as a primary or substantial source of revenue. A Landscape Professional must possess a tax ID number and liability insurance under the company name. The landscaping professional cannot be an employee of the general contractor.

1.3.5 “Licensed Professional” is the designated site representative for the Vendor, or the designated supervisor of the Vendor’s “Field Geologist(s)”. Minimum qualifications for this position are: 1) must have a valid and current professional license through the Kansas State

Board of Technical Professions and 2) must be technically qualified to interpret geologic data. This position is responsible for the preparation and certification of all geological information in reports and on maps.

1.3.6 "Other pollutant" means any substance determined by the Secretary of Health and Environment that poses a substantial present or potential hazard to human health or the environment when released. The term does not include radioactive materials regulated by K.S.A. 48-16-01 et seq.

1.3.7 "Petroleum" means petroleum, including crude oil or any fraction thereof, which is liquid at standard conditions of temperature and pressure, including but not limited to, gasoline, gasohol, diesel fuel, fuel oils and kerosene.

1.3.8 "Project Geologist" is the designated site representative for the Vendor, or the designated supervisor of the vendor's "Field Geologist(s)". Minimum qualifications for this position are 1) all the minimum qualifications for a "Field Geologist", and 2) currently a Licensed Geologist in the state of Kansas. This position is responsible for the preparation and certification of all geological information in reports and on maps.

1.3.9 "Project Manager" means the KDHE staff geologist designated to be the lead technical interface with the vendor.

1.3.10 "Release" means any spilling, leaking, pumping, pouring, emitting, discharging, injecting, escaping, leaching, dumping, or disposing into the environment (including the abandonment or discarding of barrels, containers, and other closed receptacles containing any Hazardous substance).

1.3.11 "Sampling Technician" The minimum qualifications for this position are 1) has knowledge of EPA/KDHE sampling protocol and 2) has performed groundwater laboratory sampling of at least 30 monitoring wells.

1.3.12 "Trained Professional" The minimum qualifications for this position are Bachelor's degree from an accredited four year college or a related degree with a minimum of 30 hours of geologic, hydrogeologic or environmental science course work.

1.3.13 "Vendor" means any person (individual, partnership, association or corporation) who is seeking or is chosen to enter into a procurement contract with the O/O.

1.4 INQUIRIES

1.4.1 All inquiries concerning this RFP must be submitted in writing to:

Petroleum Storage Tank Release Trust Fund
1000 SW Jackson, Suite 410
Topeka, KS 66612-1367

Attn: Julie Turner FAX: (913) 296-6190

1.4.2 Answers to all written questions will be distributed to all participating prospective Vendors by mail.

1.4.3 In all cases, no verbal communication will override written communications and only written communications are binding.

1.5 REVISIONS TO THE REQUEST FOR PROPOSAL

In the event it becomes necessary to revise any part of this RFP, revisions will be provided in writing to all Vendors who received this RFP.

1.6 SUBCONTRACTORS

If the Vendor intends to subcontract any part of the work to be performed under this RFP, the Vendor must include in its proposal a complete list of potential subcontractors and a description of the work to be subcontracted. The Vendor is responsible for assuring the subcontractors possess all licenses as required by the State of Kansas for the services they will provide.

1.7 SUBMISSION OF PROPOSAL

Two (2) sealed copies of the proposals must be received by the Petroleum Storage Tank Release Trust Fund no later than 3:00 p.m. on the date specified in the Project Information Sheet and the Project Bid Proposal Sheet. Proposals should be addressed to:

Petroleum Storage Tank Release Trust Fund
1000 SW Jackson, Suite 410
Topeka, KS 66612-1367
Attn: Mickey Trimble

The proposal must include costs for all tasks necessary to complete the specified scope of work in accordance with all requirements outlined in the RFP.

1.7.1 The outside of the envelope should be marked "**SEALED BID**" in bold lettering. The bid number(s) of the enclosed bid(s) must be displayed on the outside of the envelope. All bids sent in the same envelope must have the same bid deadline. Failure to properly mark the outside of the envelope may result in the bid(s) being disqualified.

1.7.2 Late proposals will not be opened. A letter notifying the Vendor, and documentation that the proposal was received after the deadline, will be mailed to the Vendor. The proposal will be stored in KDHE files.

1.7.3 KDHE and/or the O/O will not pay for any information herein requested, nor are they liable for any costs incurred by the Vendor to prepare or submit a proposal.

1.7.4 All proposals shall be submitted on the Project Bid Proposal Sheet (EXHIBIT 2) and, when applicable, on the Project Bid Summary Sheet that will be a part of EXHIBIT 2.

1.7.5 KDHE will forward to the O/O a copy of the proposals received by the deadline.

1.8 WITHDRAWAL OF BIDS

A Vendor may withdraw a bid at any time prior to the scheduled closing time for receipt of proposals.

1.9 PROPOSAL OBLIGATIONS

The contents of the proposal and any clarification thereto submitted by the successful Vendor shall become part of the contractual obligation and will be incorporated by reference into the ensuing contract.

1.10 TERM OF PROPOSAL

All proposals shall be firm for a period of ninety (90) days after the proposal due date to allow time for evaluation of all proposals and to make an award.

1.11 DISPOSITION OF PROPOSALS

All proposals become the property of the State of Kansas upon receipt and will not be returned to the Vendor. The State of Kansas shall have the right to use all ideas or adaptations of ideas contained in any proposal received in response to this RFP. Selection or rejection of the proposal will not affect this right.

1.12 NOTIFICATION OF APPROVED COSTS

After evaluation of the proposals, all Vendors who submitted proposals will be notified in writing of the approved costs for the Project.

1.13 EVALUATION CRITERIA

Due to the variable nature of sites being investigated, bids will be reviewed to ensure that line item costs are equitably distributed across all required tasks. Prices must accurately reflect the actual cost to complete each segment of the project because additional scopes of work may be required. To avoid the potential problem of vendors unfairly "loading" costs into certain categories to avoid cost proration, KDHE Trust Fund bid proposals will be evaluated on a line item basis. KDHE will review individual line item rates with respect to bids from other vendors for the same project, and to historical costs.

An explanation of all higher or lower than published reasonable line item costs must be included with the proposal. If an explanation is not submitted with the original bid, or the explanation is

deemed to be inadequate, the bid may be rejected as unresponsive. The fact that previous bids may have been approved with unreasonable line item costs does not mean that future bids with similar costs will be approved.

The following procedure must be used in preparing the bid package:

If a line item unit rate is bid as zero (0) or is left blank, and the activity associated with that line item is required to complete the scope of work, the bid will be rejected as unresponsive.

The unit rate and line item total cost should be entered as "Included" (INC) if the unit cost for that line item is included in the rate for another line item. The line item in which it is included must be specified.

The unit rate and line item total cost should be entered as "NC" if it is proposed to perform the activity at no cost. "NC" will be taken to mean that the no charge rate will apply not only to the original scope of work, but will also apply to any additional scope of work within the geographic area.

KDHE reserves the right to approve or deny proposed rates and/or quantities on a line item basis. If deemed to be in the best interest of the O/O and the State, KDHE may propose reduced but reasonable (as determined by KDHE using the criteria above) costs for specific line items, and approve the revised total project cost. If the vendor is not willing to perform the task(s) at the reasonable rate, they may withdraw their bid. KDHE will no longer allow costs to be moved between line items to meet the reasonable cost requirement after the bid closing date.

In addition to the above described line item cost evaluation, proposals will be evaluated on the Vendor's 1) total cost as submitted on the Project Bid Proposal Sheets, 2) experience, 3) expertise, and 4) past performance on KDHE Trust Fund Sites. The final determination of approved costs for the project will be in the best interest of the O/O and KDHE.

1.14 CONFLICT OR AMBIGUITIES

Vendors shall notify KDHE immediately if conflicts or ambiguities are found in the Request For Proposal. Failure to do so prior to the specified closing date may result in these items being resolved in a manner deemed to be in the State's best interest as judged by the KDHE Storage Tank Staff.

SECTION 2 CONTRACT INFORMATION

2.1 PURPOSE

This section will outline the type of contract contemplated and will set forth contract clauses that need to be contained in any resultant contract.

2.2 CONTRACT DOCUMENT

2.2.1 The Contract between the O/O and Vendor shall consist of, at a minimum, the following: 1) This RFP and any amendments thereto, 2) the Vendors proposal submitted in response to the RFP, and 3) the Contractual Provisions form # O/O 101, 7/92 (see ATTACHMENT G) or equivalent.

2.2.2 For the purpose of contract uniformity, the O/O's standard form contract, with the Contractual Provisions (ATTACHMENT G) in this RFP attached, should be used.

2.2.3 In the event of any inconsistency or contradiction between this RFP and the Vendor's proposal and/or contract form, the provisions of this RFP are controlling.

2.3 RESPONSIBILITIES

2.3.1 The O/O is responsible for assuring the investigation and/or corrective action is conducted in accordance with the KDHE specification described in SECTIONS 3.0, 4.0 and 5.0.

2.3.2 The O/O and the Vendor selected to preform this scope of work are responsible for maintaining the initial project costs approved by KDHE. Any change to the value of this contract will be in accordance with the Vendor's proposed unit pricing and must be approved in writing by KDHE prior to the Vendor commencing work. KDHE reserves the right to deny any changes.

2.3.3 The O/O and the Vendor are responsible for securing and complying with any and all federal, State of Kansas or local permits and regulations regarding the Scope of Work defined in this RFP.

2.4 ERRORS IN PREPARATION

The Vendor is responsible for any mathematical error or incorrect extension of any calculations in the Vendors' price quotes. In case of discrepancies, the Vendor unit cost will be multiplied by the units provided and the resultant unit price will be used in the evaluation. Any proposal with an error will be disqualified if there is a five percent or less difference between it and the next lowest qualified proposal. If the percent difference is greater than five percent, the corrected amount will be considered the Vendor's submission and subject to approval.

2.5 CONTRACT AMENDMENTS

Modification, amendment, or any extension to a contract resulting from this RFP must be in writing. The O/O must receive prior written approval from KDHE for the changes. KDHE reserves the right to deny any modifications, amendments, or extensions.

2.6 COMPLIANCE WITH LAW

The Vendor agrees to comply with all applicable federal, state, and local laws, rules, regulations and ordinances; all provisions required thereby to be included herein are hereby incorporated by reference. The Vendor agrees to indemnify and hold the O/O and KDHE harmless from any loss, damage, or liability resulting from the violation on the part of the Vendor of such laws, rules, regulations, or ordinances.

2.7 SEVERABILITY

The invalidity in whole or part of any provision of the contract shall not void or affect the validity of any other provision.

2.8 ASSIGNMENT, TRANSFER, CONVEYANCE, SUBCONTRACT, AND DISPOSAL

The Vendor shall not assign, transfer, convey, subcontract, or dispose of any contract resulting from this RFP, or its rights, title, interest, or power to execute such assignments to any other person, company, corporation, or entity without the written consent of the O/O and KDHE.

2.9 INSURANCE

The Vendor shall maintain, at its expense during the term of the contract, the following insurance covering the services to be performed under this contract:

2.9.1 Workmen's compensation-statutory

2.9.2 Employers liability insurance in the minimum amount of $500,000.00 per occurrence with a $1,000,000.00 aggregate.

2.9.3 Comprehensive general liability insurance of $1,000,000.00 per occurrence with a $1,000,000.00 aggregate.

2.9.4 Vehicle liability (property damage and bodily injury combined) $500,000.00 per occurrence.

2.9.5 Professional liability insurance of $1,000,000 per occurrence with a $1,000,000 aggregate.

2.9.6 The successful Vendor will provide the O/O, within twenty (20) working days of the contract signing, a certificate of insurance (Accord Form 25-S) naming the O/O as the certificate holder. The cancellation clause of the Accord Form will read as follows:

"Should any of the above described policies be cancelled before the expiration date thereof, the issuing company will endeavor to mail 10 days written notice to the certificate holder named to the left, but failure to mail such notice shall impose no obligation or liability of any kind upon the company, its agents or representatives."

A copy of this document must be provided to KDHE within the same 20 working day time period.

2.10 INDEMNIFICATION

Neither the O/O nor KDHE shall be liable for any damage or compensation payable at law in respect to or in consequence of any accident or injury to any worker or other person in the employment of the Vendor or any subcontractor, save and except an accident or injury resulting from a willful negligent act or default of the O/O or KDHE.

The Vendor shall indemnify and keep indemnified the O/O and KDHE against all such damages and compensation, save and except as aforesaid, and against all claims, proceedings, costs, charges, and expenses whatsoever in respect thereof or in relation thereto.

2.11 LIEN RELEASES

A release of liens must be provided to the O/O and included in the Final Report.

2.12 COMMUNICATION AND NOTICES

Any written notice to the Vendor shall be deemed sufficient when deposited in the United States mail, postage prepaid, and addressed to the Vendor at its address listed on the signature page of the contract or at such address as the Vendor may have requested in writing or which is hand carried and presented to an authorized employee of the Vendor at its address as listed on the signature page of the contract.

2.13 TERMINATION

2.13.1 Termination for cause

The O/O or the Vendor may terminate the contract resulting from this RFP at any time when either Party fails to carry out its obligations under the provisions of this RFP or to make substantial progress under the terms specified in the RFP and the resulting proposal and contract.

2.13.2 The O/O shall provide the Vendor with written notice of conditions adversely affecting performance. If after such notice the Vendor fails to remedy the conditions contained in the notice within ten (10) working days the O/O may issue the Vendor an order to stop work immediately and exercise their right to terminate the contract.

2.13.3 The Vendor shall provide the O/O with written notice of conditions adversely affecting performance. If after such notice the O/O fails to remedy the conditions contained in the notice within ten (10) working days the Vendor may exercise their right to terminate the contract.

2.13.4 The O/O shall be obligated only for the services performed in accordance with the RFP specifications prior to the date of termination notice.

2.14 WAIVER

In the event of breach of contract or any provision thereof, the failure of the O/O to exercise any of its rights or remedies under this contract shall not be construed as a waiver of any such provision of the contract breached or as an acquiescence in the breach.

The remedies herein reserved shall be cumulative and additional to any other remedies at law.

SECTION 3.0 STATEMENT OF WORK

3.1 GENERAL INFORMATION

3.1.1 The following information is provided to assist the O/O in obtaining proposals for the scope of work necessary to accomplish the goals outlined herein. See also Section 6 of this document, Proposal and Work Specific Definitions, and review the information required in Section 4.5 for the Final Report and Section 4.6 for monitoring reports.

3.1.2 The Vendor may modify the scope of work; however, all modifications and justification for the modifications must be identified as such in the proposal. Modifications to the proposal must be approved in writing by KDHE prior to the initiation of work.

3.1.3 The Vendor is responsible for insuring that work performed under this contract complies with all applicable standard operating procedures (SOP's) as included in the most recent KDHE-Division of Environment Quality Management Plan (QMP) or directed by the KDHE Project Manager if it is determined by the KDHE that more rigorous operating procedures are warranted. The KDHE-Division of Environment (QMP) can be obtained from KDHE or from the KDHE website at http://www.kdhe.state.ks.us/ber.

3.1.4 KDHE reserves the right to reject any modification to proposals.

3.1.5 Project Bid Proposal and Work Specific definitions can be found in SECTION 6.0 of this bid package.

3.1.6 The investigation and monitoring scopes of work are each considered separate and unique. The accomplishment of the investigation scope of work does not guarantee that the monitoring scope of work will be required. However, if the monitoring scope of work is deemed necessary, it shall be the O/O's responsibility to contract with a Vendor to accomplish the goals outlined herein.

3.2 SITE INFORMATION

3.2.1 Review the site specific information for each site in EXHIBIT 1. Conduct the work described therein following the requirements outlined in this document.

3.3 FIELD INVESTIGATION

3.3.1 Investigation Goals

3.3.1.1 Complete the investigation in accordance with all requirements outlined in this document.

3.3.1.2 Determine the horizontal and vertical extent, and concentration gradients of both soil and groundwater contamination. Identify all contaminant migration pathways.

3.3.1.3 Determine the leading edge of the groundwater contaminant plume.

3.3.1.4 Determine the soil type(s) and hydrologic properties of the unsaturated and saturated zones.

3.3.1.5 The Vendor is responsible for meeting the Investigation Goals outlined in this section and SECTION 4.0, Deliverables.

3.3.2 Probe Survey

3.3.2.1 If a probe survey is required, the primary goal of the survey will be to define the lateral extent of soil and/or groundwater contamination and to determine placement of permanent monitoring wells. The secondary goal of the survey will be to define the degree of contamination within the contaminated area.

The probe survey must be conducted following work plan approval and prior to mobilization for drilling activities. A separate mobilization will be required for the probe survey. A separate report must be submitted after the probe survey and before mobilization for drilling activities. The probe survey report must include a brief summary of field activities, a table summarizing the results of the survey, area base map indicating probe locations, results, contamination isocontours and proposed monitoring well and soil boring locations.

Include the following information for each probe sample in the survey report;

1) The probe ID number,
2) The sample matrix (water, soil, or soil vapor),
3) The depth at which each sample was collected,
4) Soil field screening results

5) The analytical results, in parts per billion (ppb) for groundwater (and/or parts per million (ppm) for soil), for each specified constituent, and
6) The date each sample was collected.

Drilling activities will commence after the KDHE Project Manager reviews and approves the probe survey report.

3.3.2.2 The Field Geologist who will oversee drilling activities will be on-site and oversee the probe survey. The Field Geologist will evaluate groundwater and/or soil probe analytical or field screening results to determine placement of subsequent probes. Only the number of probes necessary to complete the goals of the survey should be used.

3.3.3 Drilling Equipment and Methods

3.3.3.1 Hollow stem augers with a minimum inside diameter (I.D.) of 4.25 inches must be used for all drilling activities unless alternate drilling methods have been approved by KDHE in writing.

If it is necessary to change the drilling methods and/or equipment, the Vendor will submit to the KDHE Project Manager a written description of the proposed change. The request must be submitted under separate letter from the Vendor. KDHE will review the information and provide the Vendor with a written response authorizing or denying the proposed change. All costs associated with the change will be the responsibility of the Vendor.

3.3.3.2 It is the full responsibility of the Vendor to evaluate the specific site geology and other relevant information in order to determine the drilling method(s) necessary to meet the requirements of the contract and complete the goals of the investigation at this site.

3.3.3.3 The selected drilling method(s) must be capable of completing the wells to the depth required without causing the migration or dilution of contamination.

3.3.3.4 In unconsolidated environments: if static groundwater level is 40 feet deep or less, the drill rig using hollow stem augers must have a minimum of 3,000 foot pounds of torque. If the static water level is greater than 40 feet deep and less than 70 feet deep, the drill rig using hollow stem augers must have a minimum of 5,500 foot pounds of torque. If the static groundwater level is greater than 70 feet deep and less than 100 feet deep, the drill rig using hollow stem augers must have a minimum of 7,000 foot pounds of torque. If the static groundwater level is greater than 100 feet deep, the drill rig using hollow stem augers must have a minimum of 10,000 foot pounds of torque.

3.3.4 Drilling and Sample Collection Procedures

3.3.4.1 Soil borings exhibiting soil contamination to groundwater should be completed as permanent monitoring wells provided that wells are adequately spaced to achieve the objectives of the site assessment. The determination of soil contamination will be based on field analysis and inspection of each sample collected.

3.3.4.2 Each borehole completed as a monitoring well must have a minimum borehole diameter of 8" or four inches larger than the outside diameter of the casing, whichever is larger.

3.3.4.3 A Field Geologist will be on-site and oversee all drilling and well completion activities and perform all hydrologic testing activities. The Field Geologist will evaluate, describe, and record the lithology, moisture content, odor, and all other observations related to the geology of the site and contamination detected during drilling activities.

3.3.4.4 Discrete soil samples will be collected using split spoon, shelby tube, or continuous samplers. No composite samples will be allowed. All soil samples will be collected in this manner until groundwater is encountered or drilling is discontinued at the direction of the KDHE Project Manager. If alternate drilling methods are approved, collection of discrete drilling samples for field screening and laboratory analysis will be up to the discretion of the KDHE Project Manager. (Refer to Section 3.3.8.3 and 3.3.8.4)

3.3.4.5 During the discrete soil sampling process, duplicate soil samples will be collected from each discrete soil sample. One of the samples will be placed in the specified sample container for analysis in the field. The other sample will be immediately placed in a KDHE Certified Laboratory approved sample container for laboratory analysis. Samples will be preserved as required by the analytical method.

3.3.4.6 The Project Geologist or Licensed Professional will stamp and sign the Final Report verifying that all the above drilling and sampling procedures were followed as specified in this RFP.

3.3.5 Monitoring Wells

3.3.5.1 Wells will be installed by a KDHE licensed water well contractor using hollow stem augers or other approved drilling methods.

3.3.5.2 All monitoring wells must be securely covered until completed.

3.3.5.3 Monitoring well completions will meet or exceed the KDHE Standard Monitoring Well Design included as ATTACHMENT A with the following exceptions:

1) The screen seal will be a two foot layer of hydrated bentonite (granular chips, or pellets). The seal will be hydrated with at least five gallons of water for every 50 lb. bag of bentonite. Hydration will occur at a minimum after each bag has been placed in the annulus.

2) Wells where the screen seal is less than or equal to 40 feet bgs will be grouted with hydrated bentonite as described in #1 above or with a flowable bentonite grout or cement bentonite grout. Wells where the screen seal is greater than 40 bgs will be grouted using a flowable bentonite grout or cement bentonite grout. The flowable grout will be pumped through a tremie pipe with a diameter smaller than the well casing from the screen seal up to the depth specified in ATTACHMENT A. Under both scenarios neat cement grout will not be allowed.

3) Any changes to this design must be approved by the KDHE Project Manager in writing, once justification has been supplied regarding a variance from the original design. Flush-mounted wells require a variance from the KDHE Bureau of Water

3.3.5.4 Monitoring well completions less than 100 feet total depth shall be constructed using a minimum of 2 inch inside diameter (I.D.) casing and screen unless otherwise specified in the site specific information. Monitoring well completions to a depth of 100 feet or greater than 100 feet shall be constructed using a minimum of 4 inch I.D. casing and screen.

3.3.5.5 Unless other wise specified in EXHIBIT 1 the screen length will be based on estimated groundwater depth. Screen length should be based on the following groundwater depths: < 25 feet - 10 foot screens, 25 - 49 feet - 15 foot screens, 50 - 74 feet, 20 foot screens, 75 - 100 feet - 25 foot screens, > 100 feet - 30 foot screens. The screen shall be placed such that an equal amount of screen is above and below the static water level unless otherwise specified by the KDHE Project Manager.

3.3.5.6 Although an estimated or approximate depth to groundwater has been provided, the Vendor will be fully responsible for determining the actual depth to groundwater and completing the well(s) to the appropriate depth.

3.3.5.7 The Vendor will be fully responsible for determining groundwater flow direction during the investigation in order to place monitoring wells to achieve the goals of the site assessment.

3.3.5.8 All monitoring wells must be properly developed (see Section 6.2.5 and ATTACHMENT H of this RFP). If wells are not sampled immediately following development, three casing volumes must be purged prior to sampling. Wells must be allowed to return to static water levels before sampling. Static water level is defined as the level at which water stands in a well that is not being affected by withdrawal.

It is generally expressed as the distance from the ground surface (or from a measuring point near the ground surface) to the water level in the well.

In low yield wells, the Vendor must allow the groundwater to return as close to possible to static conditions before taking a groundwater sample for analysis. If static conditions are not attained or if 3 well volumes of water cannot be purged before groundwater samples are taken, the Vendor must document the reasons and include as part of the field notes and on Table 2.5, Groundwater Analytical Results.

3.3.6 Hydrologic Properties of the Site

3.3.6.1 Perform saturated zone tests to define the following hydrologic characteristics: hydraulic conductivity, transmissivity, appropriate storage characteristics, and contaminant migration rates. The saturated zone tests used must be applicable to both the local geologic setting and the type of monitoring well completion proposed.

3.3.6.2 Perform unsaturated zone tests to define the hydrologic characteristics of the unsaturated zone and determine whether the soils are conducive to soil vapor extraction remedial technologies. The tests must be conducted on samples from the lithologic zone(s) showing the highest concentration of contamination detected using field analysis.

3.3.6.3 If monitoring wells are completed in different geologic zones, a hydrologic test must be performed on each zone.

3.3.6.4 Determine the hydraulic gradient over the assessment area. Hydraulic gradient is the rate of change in total head per unit of distance of flow in a given direction. The hydraulic gradient, I, is by definition the difference in hydraulic head, $(h_1 - h_2)$, divided by the distance L, along the flow path.

$$I = \frac{h_1 - h_2}{L} \quad \textit{(feet/foot)}$$

3.3.6.5 Determine the porosity of the unsaturated zone. There is no established method to determine porosity. Many laboratories use dry bulk density and specific gravity data to determine porosity using the following derivation:

$$n = 1 - \frac{P_b}{P_s}$$

Where,
n = *porosity (cc/cc)*
P_b = *dry bulk density (gm of dry soil/cc of soil)*
P_s = *specific gravity of particle density (gm/cc)*
A value for specific gravity of 2.65 g/cc can be assumed for most mineral soils.

3.3.6.6 For KRBCA scopes of work, drilling should cease after the last sample is collected from each boring from which samples for unsaturated zone hydrologic tests were collected.

3.3.7 Waste Disposal and Borehole Plugging

3.3.7.1 Soil borings not completed as monitoring wells will be plugged in accordance with all state regulations and guidelines as outlined in ATTACHMENT B. Note that all Trust Fund sites have been determined by the department to be contaminated (28-30-7(d)) until a Trust Fund investigation has been completed.

3.3.7.2 All waste soils and waste water generated during the investigation will be treated and disposed of in accordance with all local, state, and federal statutes and regulations. See also Sections 6.1.24 and 6.1.29 of this RFP.

3.3.8 Field and Laboratory Water and Soil Sample Analysis

3.3.8.1 A headspace analysis will be conducted on discrete soil samples collected from appropriate depths. The analysis must be conducted in the field at the time the samples are retrieved from the sampler. The analysis will be conducted using a photoionization detector, organic vapor analysis device, colorimetric tubes, or other field testing equipment approved by KDHE for hydrocarbon analysis.

3.3.8.2 Each discrete sample collected for field analysis will be prepared as follows. Fill a clean glass quart jar half full of the discrete sample to be analyzed, seal the jar, and let it stand until the sample reaches 70^0F for a minimum of 15 minutes (allowing volatilization to occur) and a maximum of 60 minutes prior to testing. Quart jars may be decontaminated and reused when dry.

3.3.8.3 Up to five soil samples from each soil boring will be submitted for laboratory analysis. Soil samples that are submitted for laboratory analysis must be gathered from the unsaturated zone. The unsaturated zone for unconfined environments is defined as that portion of the column which is above static water level. If static water level cannot be determined prior to submitting soil samples to the laboratory, the KDHE Project Manager should be contacted to determine whether the discrete soil samples should be submitted for laboratory analysis.

3.3.8.4 The duplicate of the 0 - 1' below ground surface (bgs) surficial soil sample will be submitted for laboratory analysis if exposure to surficial soils is currently likely or likely in the future. This would apply to any site that does not currently have a concrete, asphalt or other paved surface or may not have a paved surface in the near future.

For sites where static water level is <15 feet bgs the duplicates of the soil samples collected at 5 foot intervals (1'-5', 5'-10', etc.) above the capillary fringe will be submitted for laboratory analysis. In addition, the 0-1' duplicate (if applicable) along

with the duplicate of the sample collected from the bottom of the borehole, or immediately above the saturated zone if the boring extends to groundwater, will be submitted for analysis.

For sites where static groundwater is $15 and < 20 bgs the duplicate of the sample collected from the 10 - 15 feet bgs interval will be submitted for lab analysis. In addition, the 0-1' duplicate (if applicable), the duplicates of the 1'-5' and 5'-10' samples along with the duplicate sample from the bottom of the borehole or immediately above the saturated zone if the borehole extends to groundwater, will be submitted for lab analysis.

For sites where static groundwater is $20 feet bgs, the duplicate of the soil sample showing the highest field analysis from the 1'-10' interval will be submitted for lab analysis. In addition, the 0-1' duplicate (if applicable), the duplicates of the two soil samples greater than 10' bgs and above the capillary fringe showing the highest field analysis and the duplicate of the sample collected from the bottom of the borehole, or immediately above the saturated zone if the boring extends to groundwater, will also be submitted for analysis. If field analysis indicates no petroleum contamination, samples submitted should be from the intervals which appear most conducive to petroleum migration. Duplicates not submitted for laboratory analysis may be properly disposed after the borehole is completed.

For Kansas Risk Based Corrective Action scopes of work, the duplicate of the sample collected from the bottom of the borehole, or immediately above the saturated zone will not be submitted for laboratory analysis regardless of the depth to groundwater.

3.3.8.5 At least one groundwater sample will be collected from each monitoring well installed as part of the investigation except for wells containing separate phase hydrocarbon product. Other water wells (i.e., public, private, monitoring, etc.) located within a 500 foot radius of the contaminant plume may also need to be sampled. If other wells are known or are found to exist within this radius, contact the KDHE Project Manager before beginning sampling to discuss which wells should be sampled. All ground water samples will be collected within the same 24 hour period. If contamination is detected in any drinking water supply well the KDHE Project Manager or their supervisor must be notified by telephone as soon as possible.

Two (2) groundwater samples from different monitoring wells installed during the investigation will be submitted for full VOC analysis. One of the groundwater samples submitted will be collected from the monitoring well installed at the contamination source or from the monitoring well which appears to contain the most highly contaminated groundwater. The other sample submitted will be collected from the furthest down gradient monitoring well.

Upon request by the KDHE Project Manager, two replicate groundwater samples from specified wells will be submitted to KDHE within 48 hours of collection, excluding weekends and KDHE holidays. A representative of the Vendor will contact the KDHE Project Manager prior to groundwater sampling to determine if replicate samples will be submitted. Do not submit replicates of PAH or product samples to KDHE. Samples submitted to KDHE will be labeled using a waterproof marking instrument (pencil, indelible ink, etc.) with the KDHE site name, KDHE project code, date and time collected, and the well from which it was collected. Samples with Chain-of-Custody forms, and a field map showing the location of each well and approximate groundwater flow direction, should be shipped or hand delivered to the KDHE Project Manager to reach KDHE between 8:30 am and 4:30 pm Monday through Friday, excluding KDHE holidays. Do not send replicate samples directly to the KDHE laboratory.

One trip blank will accompany each sample container. Trip blanks should be obtained from the laboratory performing the analysis. Costs for analysis of any and all samples for which the required QA/QC data (see Appendix 5, Laboratory Data, under Section 6.0 Documentation in Section 4.5, Final Report, Assessment Phase.) and requested sample replicates have not been submitted will not be eligible for reimbursement. Replicates will be analyzed by the KDHE laboratory and one of KDHE's contract laboratories. If the analytical results from the Vendor's subcontracting laboratory cannot be confirmed by the QA/QC data and replicate sample analyses, the Vendor may be required to resample all monitoring wells at the Vendor's expense. Results will be considered acceptable if the % difference between the Vendor's lab and the next closest lab's results does not exceed 25%.

3.3.8.6 Groundwater samples will not be collected for laboratory analysis if separate phase hydrocarbon product is present in the well. The Vendor shall record in the field notes a complete description of the product including thickness of the product layer, color, odor, and viscosity and indicate the type of product suspected.

3.3.8.7 A sample of the hydrocarbon product will be collected and will be analyzed by a laboratory certified by KDHE. If free product is detected in more than one well, collect only one product sample unless it is suspected, based on the potential sources and product appearance, that the product type or mixture of types differs in different wells. The analysis will indicate the type(s) of fuel detected. The laboratory report must include a copy of the analytical results and chromatograms.

3.3.8.8 All laboratory analyses will be performed by a laboratory certified by KDHE for the specific analyte(s) and laboratory method, if certification is available for the proposed method, as outlined in ATTACHMENT C.

3.3.8.9 All samples designated for laboratory analysis will immediately, upon collection, be containerized and sealed in a sample container laboratory approved for the constituent of concern, and will be properly preserved and transported to the

laboratory. Product samples will be transported in a separate container from groundwater and soil samples.

3.3.9 Property Access

3.3.9.1 The Vendor is responsible for contacting all on-site and off-site property owners to obtain access. Written authorization will be obtained from the owner of each property where access is necessary. Initial contact may be verbal, but written permission must be obtained from each owner of each property to be accessed prior to mobilizing equipment to the site to begin probing and/or drilling operations. Required property access includes all properties that have a probe, soil boring or monitoring well located on the property in the KDHE approved work plan.

At least two written and two verbal attempts to obtain access will be made. The first will be made within two weeks and the second within three weeks after the work plan is approved. If no response is received or access is denied from the property owner within three weeks of the initial contact, the KDHE Project Manager should be notified in writing. Written notification should include copies of letters sent and records of verbal attempts such as phone records, field notes and so forth, and request KDHE's assistance in acquiring access.

3.3.9.2 For off-site access, the Vendor should use city and utility easements when appropriate and necessary. Written permission to drill in city and utility easements must be obtained prior to equipment mobilization. In such cases, the Vendor must obtain written permission from both the property owner and the entity granting the easement. Copies of all signed access agreements should be included in Appendix 7 of the Final Report.

3.3.9.3 The Vendor is expected to act in a professional and respectful manner to any local and agency authorities, utility companies, and the public in general when requesting access.

3.3.10 Property Restoration

3.3.10.1 Any property damaged or destroyed during this investigation must be restored to its original condition within 30 calendar days after the damage or destruction has occurred. All costs associated with the restoration are the responsibility of the Vendor.

3.3.10.2 If any professionally landscaped areas are disturbed during investigation activities, the Vendor must contract with a Landscape Professional to conduct the necessary repairs. Documentation of the contract will be required.

3.3.11 Monitoring Well Surveying

3.3.11.1 Subsequent to completion of the assessment phase field work, all monitoring wells must be surveyed by a Registered Land Surveyor (RLS). If surveying of any existing wells is included in the scope of work in EXHIBIT 2, or if existing wells are found during the investigation and the KDHE Project Manager directs the Vendor to sample and/or survey the wells, all wells must be surveyed during the same RLS mobilization and be included in one survey report. A copy of the survey report must be included in Appendix 7 of the Final Report.

3.3.11.2 Establish a permanent datum control point (benchmark) on-site.

3.3.11.3 The site benchmark will correlate to sea level datum (U.S.G.S. or N.G.S. elevations) within an accuracy determined by the following formula:

degree of accuracy (in feet) = 0.1 x the square root of the distance (in miles) from the nearest vertical datum control point to be used.

3.3.11.4 Identify and document all benchmarks used in determining the site benchmark.

3.3.11.5 Install a permanent datum control point (i.e. a surveyor's bolt mounted flush within the cement, or permanent mark on flush mount rim) on the concrete pad or flush mount rim for each monitoring well .

3.3.11.6 The datum point for each monitoring well will be recorded within 0.01 vertical feet accuracy relative to the site benchmark.

3.3.11.7 Determine the distance in feet north and west from the southeast corner of the section containing each monitoring well. Survey report will include the section township and range location to four quarters for each monitoring well. Determine the latitude and longitude of the site using a GPS instrument. GPS information will be reported to 5 decimals.

3.3.11.8 Establish to within 0.01 vertical feet relative to the site benchmark, and permanently mark on the well casing, the point from which depth to groundwater will be measured.

3.3.11.9 Attach a KDHE site identification tag permanently to the cover (or other appropriate location) of each monitoring well. Instructions for placing the tag are provided in ATTACHMENT D.

3.3.11.10 Complete a site identification report for each monitoring well and submit to KDHE. Instructions are provided in ATTACHMENT D.

3.4 MONITORING FIELD WORK

3.4.1 Monitoring Goals

3.4.1.1 Complete the monitoring program in accordance with all requirements outlined in this document.

3.4.1.2 Obtain and develop sufficient data during the monitoring so the potential risk to the environment and human health can be evaluated and a recommendation can be made regarding future work to be conducted at the site.

3.4.1.3 The Vendor is responsible for meeting the Goals outlined in this section and Section 4.0 Deliverables.

3.4.2 Monitoring Work Scope

3.4.2.1 All groundwater sampling must be performed by a qualified Sampling Technician as defined in Section 1.3.11.

3.4.2.2 One groundwater sample will be collected from each of the wells specified in KDHE's letter instructing that the monitoring phase will be implemented. All groundwater samples will be collected within the same 24 hour period. All ground water samples will be obtained within 45 days of the report due date unless otherwise specified by the KDHE Project Manager. The frequency of the sampling events must be as specified on the "Monitoring Reports by Vendor" sheets distributed every other week unless amended by the KDHE Project Manager.

3.4.2.3 All monitoring wells must be properly purged prior by removing as close to three well volumes of water prior to sampling. Purging of low yield wells will require the vendor to manage field activities such that approved staff time is utilized to maximize the amount of purge water that is removed from each well.

The Vendor must allow the water levels in the purged wells to return to static conditions before taking a groundwater sample for analysis. In low yield wells, the Vendor must allow the groundwater to return as close to possible to static conditions before taking a groundwater sample for analysis.

If static conditions are not attained or if 3 well volumes of water cannot be purged before groundwater samples are taken, the Vendor must document the reasons and include as part of the field notes.

3.4.2.4 Groundwater samples will not be collected for laboratory analysis if separate phase hydrocarbon product is present in the well. The Vendor shall document the complete description of the product including thickness of the product layer, color, odor, viscosity, and indicate the type of product suspected.

3.4.2.5 If it is indicated in KDHE's letter instructing that the monitoring phase will be implemented, a sample of the hydrocarbon product will be collected from the well and will be analyzed by a KDHE certified laboratory. The analysis will indicate the type of fuel detected and the Vendor will include a copy of the analysis and chromatogram obtained from the laboratory.

3.4.2.6 All laboratory analyses will be performed by a laboratory certified by KDHE for the specific analysis and laboratory method, if certification is available for the proposed method, as outlined in ATTACHMENT C. Groundwater samples will be submitted laboratory analysis for the following: benzene, toluene, ethylbenzene, xylenes (BTEX), 1,2 DCA, naphthalene, MtBE and EDB. Analysis for TPH may be requested by the KDHE Project Manager.

3.4.2.7 All samples designated for laboratory analysis will immediately, upon collection, be containerized and sealed in a sample container approved by the laboratory for the constituent of concern, and will be properly preserved and transported to the laboratory. Product samples will be transported in a separate container from groundwater and/or soil samples.

3.4.2.8 See Appendix 5, Laboratory Data, under Section 6.0, Documentation in Section 4.5, Final Report, Assessment Phase, for requirements regarding split sampling and QA/QC documentation for lab samples.

3.4.3 Waste Disposal

3.4.3.1 All waste water generated during the monitoring program will be treated and disposed of in accordance with all local, state, and federal statutes and regulations. The procedures outlined in Section 6.0 for waste water handling must be followed unless other methods have been pre-approved by the KDHE Project Manager. No waste water is to be stored on site for any reason.

3.4.3.2 Separate phase product recovered from monitoring wells must be containerized, transported, and disposed of in accordance with all local, state, and federal requirements.

3.4.4 Property Restoration

3.4.4.1 Any property damaged or destroyed during this monitoring program must be restored to its original condition within 30 calendar days after the damage or destruction occurred. All costs associated with the restoration are the responsibility of the Vendor unless the work is performed to restore the decommissioning of monitoring wells or other project related and pre-approved restoration.

3.4.4.2 If any professionally landscaped areas are disturbed during investigation activities, the Vendor must contract with a Landscape Professional to conduct the necessary repairs. Documentation of the contract will be required.

3.4.5 Work Notification Requirements

3.4.5.1 Notify KDHE personnel at least one week prior to sampling on 50% of the monitoring events. Notifications must be faxed, e-mailed or mailed to the attention of the KDHE Project Manager and the associated district office. Notifications must include the site name, KDHE site ID #, date to be sampled, approximate time the vendor will be on-site for sampling and the sampling technicians's cell phone number. The KDHE Project Manager and the designated District Office Representative shall be notified by telephone, fax or e-mail if there are any revisions to the original notification. Costs for the monitoring event may be denied if KDHE is not notified as specified in this RFP.

SECTION 4.0DELIVERABLES

4.1 WORK NOTIFICATION REQUIREMENTS

4.1.1 The Vendor will notify the O/O, the KDHE District Office Representative and the designated KDHE Project Manager by telephone or in writing at least two working days in advance of drilling and again immediately following the initiation of drilling activities. If a groundwater probe survey is to be performed, the same advance notification is required. The advance notice(s) will include the date and time the field activity is scheduled to begin. Schedule changes must be reported in the same manner as they occur. A Field Work Notification Form is included with this RFP and can be used by the Vendor (fax, mail, or e-mail) to notify KDHE of field work dates (ATTACHMENT J).

4.1.2 If slug out hydrologic tests are to be performed, the Vendor will notify the designated KDHE Project Manager, by telephone or in writing, at least two working days in advance of conducting the tests. The notice will include the date and time the tests will be performed.

4.1.3 The Vendor will notify the O/O and the designated KDHE Project Manager, by telephone or in writing, when all drilling activities and hydrologic tests have been completed. The notification will include the date field work was completed. This notification must be within five working days after the work is completed.

4.1.4 The Vendor will notify the O/O and the designated KDHE Project Manager, by telephone or in writing, at least two working days in advance of when groundwater sampling events are to occur. The notification will include the date and approximate time that field work will take place. ATTACHMENT J can be used for this notification.

4.1.5 The Vendor will notify the O/O, the current site tenant, and the owner and tenant of any property on which off-site monitoring wells were installed, prior to mobilizing to the site to conduct monitoring field work. This notification should include the date that sampling of the relevant well is scheduled to take place, and request that any hindrance to well access on that date be removed. Notification should be provided at least one week before the scheduled sampling date.

4.1.6 Schedule changes must be reported to the KDHE Project Manager and the KDHE District Office Representative by telephone or in writing immediately as they occur. Approval to proceed with any field activities mentioned in 4.1.1 - 4.1.5, after a schedule change has been reported, must be approved by the KDHE Project Manager.

4.2 DEADLINES AND NOTICE TO PROCEED

4.2.1 The Vendor will complete and submit two copies of the Field Work Plan Worksheet (see ATTACHMENT E) with all required maps and photos to KDHE after the contract between the O/O and Vendor has been signed by all parties. Incomplete Field Work Plans will be returned without review. Work plans will include, at a minimum, six photographs taken of the facility or site from different angles of view. Photographs will be color prints and be taken by an employee of the Vendor. The vendor employee who performs field activities for work plan preparation and/or prepares the work plan worksheet must be a Trained Professional.

The work plan prepared states specific equipment and procedures will be used while field work is being conducted, including, but not limited to, rig type, screening and sampling equipment, decontamination procedures, waste handling procedures and qualified field personnel. The specific equipment, procedures and personnel stated in the work plan must be used in the field. Changes to the approved work plan must be submitted in writing and approved by the KDHE Project Manager.

4.2.2 KDHE will review the Field Work Plan Worksheet and provide written comment, or if approved, written authorization for the Vendor to proceed, within ten (10) working days following the date KDHE receives the plan. Work Plans will not be reviewed until verification of the required insurance (see Section 2.9, Insurance) has been received by the KDHE Project Manager.

4.2.3 The Vendor may request from KDHE that written authorization to proceed be sent in the U.S. Mail to the Vendor's office at the address provided by the Vendor, or by facsimile to the Vendor's office at a number the Vendor provides. Unless otherwise requested by the Vendor, written Notice to Proceed will be sent by U.S. Mail to the contact person provided by the Vendor in the RFP.

4.2.4 The Vendor will proceed with the Field Investigation after KDHE has approved, in writing, the Field Work Plan.

4.2.5 The Vendor will submit two copies of the Final Report for each site within 160 days after the contract between the O/O and Vendor has been signed by all parties. Incomplete Final Reports will be returned without review. The submittal deadline will not be considered to have been met until a complete report demonstrating that the investigation goals have been met is received by KDHE. Specific sections of the Final Report will also be submitted in electronic form on a Compact Disk (CD).

4.2.6 The vendor will submit two copies of the first quarterly report within 45 days of notification that the monitoring phase is to be implemented. Subsequent monitoring reports will be submitted every 90 days following the first report submittal for the duration of the monitoring program.

4.3 PRE-CONTRACT SUBMITTALS

The Vendor is required to submit as a part of the proposal each item requested in the order and format provided below. Certain items (*) will remain on file with KDHE and, once submitted, re-submittal will be necessary **only** when changes are made. The Vendor must specifically state each item omitted from the submittal package and include an explanation.

4.3.1 A cover letter from the Vendor.

4.3.2 Completed Project Bid Proposal Sheets.

4.3.3 Copy of Insurance Certificate*

4.3.4 Resumes and OSHA safety training certification of personnel proposed for the project*

4.3.5 Complete list of equipment*

4.3.6 Drill Rig Specifications*

4.3.7 Quality Assurance and Quality Control (QA/QC) plan*

4.3.8 Workers Compensation Log & Summary of Occupational Injuries & Illness (OSHA form G200)*

4.3.9 List of all sub-contractors with a description of their duties and, if applicable, copies of their OSHA safety training certificates. If the sub-contractor is to serve as the Vendor's Field Geologist, Licensed Professional, Project Geologist, Sampling Technician or Trained Professional, a copy of their resume is to be submitted to KDHE indicating their qualifications as outlined in Section 1.3.2, 1.3.5, 1.3.8, 1.3.9, 1.3.11 and 1.3.12 respectively.

4.4 FIELD WORK PLAN SUBMITTALS

4.4.1 Submit two copies of the Field Work Plan Worksheet, maps, and photos. The Field Work Plan Worksheet is included in ATTACHMENT E. The Field Work Plan Worksheet will be submitted in the format described herein and shall contain all requested information. Additional information should be included as needed.

4.5 FINAL REPORT, ASSESSMENT PHASE

4.5.1 A Final Report will be completed for each facility. Each Final Report will be a summary of all work performed, and all data requested and gathered during all activities conducted under the assessment phase of this contract.

4.5.2 Each Final Report will include a cover page with the following information: report title; site name; site address; KDHE project code; KDHE facility I.D. number; section, township, and range to four quarters; report date, and the name of the person who prepared the report. Cover page must be stamped and signed by a Kansas Licensed Geologist or Licensed Professional.

4.5.3 Each Final Report will include a table of contents with the following information:

1) section titles (see 4.5.6 below) for sections 1-5,
2) titles and page numbers for tables 2.1-2.9,
3) titles for figures 1- 8,
4) titles for each appendix in Section 6, Documentation.

4.5.4 Each Final Report will include labeled tabs for each Section title (see 4.5.6 below) and each appendix.

4.5.5 Two copies of each Final Report will be submitted to the KDHE Project Manager and one copy will be submitted to the respective O/O. Specific sections of the Final Report will also be submitted in electronic form on a Compact Disc (CD) after final report approval or when requested by the KDHE Project Manager.

The vendor may wait until the Final Report has been reviewed and approved by KDHE before providing the O/O with a copy. If the Vendor provides the O/O with a copy prior to approval of the report, copies of any and all revisions and/or addenda must also be provided to the O/O.

4.5.6 **Final Report Format:**

Each Final Report will include all information outlined below in the format and order described. Figures and tables not applicable to the site should be so noted in the Table of Contents. Do not change the item numbers designated below. Items within tables that may not be applicable, such as free product thickness, should be stated in the table to be not applicable.

Section 1.0 Site Summary

The site summary section will include the following information.

1.1 General Summary: Include a detailed summary of all past work performed at the site. Identify any nuisance conditions associated with the release(s) from the site. Determine

if any drinking water wells or surface waters have been impacted by a release from the site. State if public water is being supplied to the site and surrounding areas.

1.2 Regional Geology: Review local and regional geologic and/or hydrogeologic maps, nearby site assessments and/or investigation reports and any other pertinent publications. Identify any aquifers and/or surface water bodies serving as sources of drinking water for the area. Identify and evaluate the use and/or potential use of the uppermost groundwater zone within 0.25 miles of the source of the release at the facility.

1.3 Land Use: Investigate and describe past, current, and potential future uses of the site. Identify potential source areas, migration pathways, and receptors. Indicate and describe all subsurface structures that are potential or current receptors of contaminated media. Determine past and current uses of adjacent properties to identify other potential sources of COC. If an off-site receptor is identified, assess the past, current and potential future land use. Future land use assumptions should be based on current use, existing zoning, and development trends of adjacent properties. Document any ordinances preventing or influencing the future installation of water wells at the site or in the surrounding area such as groundwater protection areas. Identify the current predominant land use of the area as residential, commercial, recreational, agricultural, or undeveloped. Identify sensitive receptors, such as surface water bodies, wildlife sanctuaries, and wetlands.

1.4 Source History: Locate current and/or former tank systems and other potential sources such as spills or overfill incidents, both on and off-site. Investigate and summarize any previous assessment work, such as tank removal data, previous site assessments, release investigations and/or remediation activities that may have been conducted on-site and on adjacent properties. List all previous business names and property use (commercial, industrial, residential) of the facility and whether fuel was dispensed at the facility by previous owners. List all previous owners of the facility with current address(es) and include the dates of ownership for each owner. Refer to Section 7.3.2 of ASTM Practice E1527-00. Standard Practice for Environmental Site Assessments: Phase 1 Environmental Site Assessment Process for guidance.

SECTION 2.0TABLES

Tables must be labeled with the numbers and titles provided below. Number each page of tables. Include in the table a column for each numbered item requested. Do not reference or include in this section, any discussion, tables, maps, photographs, drilling logs, or other documents included in this report. Abbreviations or material referenced from other publications should be explained at the bottom of the table.

Table 2.1 Summary of Work Completed

Include the following information for work completed:

1) total number of plugged borings,
2) total number of monitoring wells completed,
3) total number of groundwater survey probes conducted,

4) total footage drilled,
5) total monitoring well footage,
6) total boring footage plugged,
7) total number of groundwater samples analyzed by laboratory,
8) total number of soil samples analyzed by laboratory,
9) total number of product samples analyzed by laboratory,
10) total number of waste water samples analyzed by laboratory.

Samples collected for saturated and unsaturated zones tests, properties and data included in Tables 2.7 and 2.8 should not be included in the total number of soil samples analyzed by laboratory.

Table 2.2 Water Well Information

Include the following information for all wells located within a 1/4 mile radius of the site.

1) the well owner's name,
2) the Section, Township and Range of the well location to three quarters, or to four quarters for wells sampled or located during the investigation, or used as a public water supply,
3) the use; select the use from those found in Section 4 of the WWC-5 form that best describes the use of the well,
4) the distance between the well and contaminant plume; give an approximate distance if the well location is known to only three quarters,
5) the location of the well relative to the contaminant plume and groundwater flow direction.

The search for this information must include at least the following: 1) a water well records search conducted through the KDHE Bureau of Water (BOW), 2) a discussion with city and/or county personnel concerning the location of public and private water supplies for the area, and 3) a ground or house-to-house reconnaissance of the area within the contaminant plume(s) and a 500 foot radius surrounding the source of contamination. PWS wells should be designated with the same numbers assigned by the city, water district, or other well owner.

Table 2.3 Well Completion Information

Include the following information for each well installed or sampled:

1) boring and/or monitoring well ID number assigned by the consultant,
2) well ID number from KDHE numbered well lock,
3) the identification number from the KDHE well tagging Site I.D. form,
4) the location of the well tag,
5) the surveyed elevation of the well's vertical datum control point (survey pin or permanent mark on flush mount rim, see Section 3.3.11.5),
6) the surveyed elevation of the top of well casing,
7) the depth, to groundwater below ground surface (bgs) in feet,
8) static groundwater elevation prior to purging (or development if wells are sampled same the day as development and the wells are not purged),

9) static groundwater elevation prior to sampling,
10) the elevation of the air/product interface,
11) the thickness of the separate-phase product,
12) the date static water level was measured.

Groundwater levels must be measured under static conditions on the same day. If free-phase petroleum product is detected, groundwater elevations must be corrected using the specific gravity (see Section 6.1.18 of this RFP) determined during the product sample analysis. Explain at the bottom of the table how the measurements were corrected.

Table 2.4 Soil Field Screening and Laboratory Results

Include the following results for each field sample, including those not submitted for laboratory analysis, and each laboratory sample collected from a boring:

1) boring and/or monitoring well ID (see Table 2.3),
2) the depth at which each sample was collected,
3) the field screening results in parts per million (ppm),
4) the concentration of each specified constituent in parts per million (ppm) determined by laboratory analysis; state the petroleum product(s) identified,
5) the date each sample was collected,
6) the EPA test method and laboratory analytical sample detection limit for each analyte in each laboratory sample,
7) the field instrument used for each field sample,
8) tier 2 risked based screening levels.

Table 2.5 Groundwater Analytical Results

Present all results for each sample point. Private wells and PWS wells should be designated consistently throughout the report. Include the following information for each groundwater and petroleum product laboratory sample:

1) well ID number (see Table 2.3),
2) the concentration of each constituent, in parts per billion (ppb)*,
3) the product(s) identified, or approximate % of each product if a mixture, for any product sample(s),
4) the volume, in gallons, of water removed from each well during well development,
5) the volume, in gallons, of water purged from the well prior to sampling,
6) the date the well was purged,
7) the date each sample was collected,
8) the EPA test method and analytical sample detection limit for each analyte in each sample,
9) tier 2 risked based screening levels.

Constituents are Total BTEX, Benzene, Toluene, Ethylbenzene, Total Xylenes, 1,2 Dichloroethane (1,2 DCA), Methyl Tertbutyl Ether (MtBE), Naphthalene, Ethylene Dibromide (EDB), TPH GRO and TPH DRO. Other constituents detected from full VOC and/or PAH scans should also be included in the table.

Table 2.6 Probe Results

Include the following information for each groundwater survey probe sample:

1) the probe ID number,
2) the sample matrix (water or soil vapor),
3) the depth at which each sample was collected,
4) the analytical results, in parts per billion (ppb) for each specified constituent,
5) the date each sample was collected.

Table 2.7 Unsaturated Zone Hydrologic Tests and Properties

Table 2.7a Include the following information for each unsaturated zone hydrologic test conducted:

1) the well and/or boring ID number (see Table 2.3),
2) the depth at which each sample was collected, including interval,
3) the analysis method name and number (ASTM, EPA) for the Grain Size Analyses and/or the Permeameter tests,
4) the sample collection method,
5) the hydraulic conductivity value in centimeters per second (cm/sec),
6) the lithologic description of each sample.

Table 2.7b Include items 1 - 3 from Table 2.7a and the following information;

1) estimated porosity (cm^3/cm^3),
2 gravimetric water content (gm/gm) (Using ASTM Method D2216-98),
3) volumetric water content (cm^3/cm^3) (Using ASTM Method D2216-98),
4) dry bulk density (gm/cm^3) (Using ASTM Method D2937-00e1),
5) organic matter (% organic matter) (If ASTM Method D2974-00 is used),
6) total organic carbon (% organic carbon) (Walkley-Black Method/ASTM D2974-00)

Table 2.8 Saturated Zone Hydrologic Tests and Properties

Include the following information for each monitoring well used for the saturated zone tests:

1) the monitoring well ID number (see Table 2.3),
2) the depth at which each sample was collected, including interval,
3) the analysis method name and number (ASTM, EPA) for the Grain Size Analyses and/or the Permeameter tests,
4) the hydraulic conductivity value in centimeters per second (cm/sec) determined for each test,
5) the transmissivity value in $meters^2$/day calculated for each sample,
6) the storativity value,
7) hydraulic gradient (ft/ft) (show calculations),
8) known or estimated yield of uppermost aquifer within a 24 hour period. (provide source),
9) area specific annual rainfall in inches per year (provide source).

Table 2.9 Waste Handling Results

Include the following information for wastes handled:

1) the type of waste (soil or water) generated,
2) the quantity of waste generated for each type of waste,
3) the storage and disposal methods used for each type of waste,
4) results of any field analysis of wastes conducted during on-site treatment,
5) results of any laboratory analysis of wastes,
6) specific location where wastes were disposed or discharged**.**

SECTION 3.0MAPS

All maps must be drawn to scale and labeled with the titles provided. Do not reference or include in this section any discussion, tables, photographs, drilling logs, or other documents included in this or any other report.

The scale for figures 3 through 6 should be approximately 1 inch # 50 feet for smaller sites and 1 inch # 100 feet for larger sites. The scale for figures 4, 5, and 6 may be adjusted to enlarge the area of the plume if the plume is small, provided that sufficient site features are shown to identify the area mapped. Maps should be 8.5" X 11" or 11" X 17" whenever possible. If warranted, the KDHE Project Manager should be contacted for approval to use a scale or figure size other than specified herein. Include a north arrow, scale, and legend on all maps. Legends should include only those items that occur at the site.

Figures 2 through 6 should include wells and borings, with ID numbers, and only those labels necessary to describe information requested for that specific map. Private and PWS wells should be designated consistently throughout the report.

Figure 1 General Site Location

A map adapted from a USGS 7.5 minute quadrangle, depicting the site location and a one mile radius of the site. The one mile radius should be clearly marked. Highlight or mark the location of the site. Contours and other information should be clear and legible.

Figure 2 Area Base Map

Two area base maps will be included in the report. The maps will be enlarged such that the facility is located at or near the center of the map. Figure 2.1 will depict the site and a minimum 350 foot radius around the source(s) of contamination. Figure 2.2 will depict the site and a minimum 500 foot radius around the source(s) of contamination or the complete area of the investigation, whichever is greater. Figure 2.1 will have an approximate scale of 1" = 100'. Figure 2.2 will have an approximate scale of 1" = 125'. Maps should be on 8 ½" x 11" or 11" x 17" paper. If groundwater is less than 25 feet bgs, a door to door search for basements must be made within a 500 foot radius of the source of contamination.

The following should be included on both maps: 1) all groundwater probes, soil borings, and wells. 2) property boundaries and buildings 3) identify the general use (residential, park, undeveloped, industrial, commercial) of properties in this area. 4) business names 5) locations or former locations of all tanks, lines, buildings, roads and other fixed objects on the facility property 6) locations of all underground utility trenches within 100 feet of the contaminant plume(s). State the type and depth of each utility service. 7) basements if door to door search is required.

Figure 3 Groundwater Flow Map

A map, adapted from Figure 2, representing the exact location of the site benchmark(s) and each well relative to the site benchmark. Label each well with the well ID, the elevation of each well (casing), static groundwater elevation, labeled equipotential contours encompassing all water measurement points, and arrow(s) indicating predominant flow paths and direction. Use all points (except anomalous points) measured for the investigation when contouring. Anomalous data points should be noted on the map. Show flow line used for calculating hydraulic gradient.

Figure 4 Soil Contamination Maps

Develop, down to laboratory non-detect (ND) levels, Total Petroleum Hydrocarbon (TPH) soil contamination maps showing the extent of soil contamination. Figure 4.1 will be TPH GRO and Figure 4.2 will be for TPH DRO. Use Figure 2 as the template and show the locations of all borings. The estimated areal extent of soil contamination above the capillary fringe must be outlined.

Use the highest soil laboratory analysis from above the capillary fringe in each boring. Develop isocontours if the contaminant distribution is suitable. Label sample points with the boring/well ID number, the TPH concentration in ppm, and the depth at which each sample was collected. If more than one product was identified, the concentration of each product should be given for each sample point at which it was detected. If the constituent being mapped was not detected in any boring, submit a map showing all sample points labeled as above with the concentration stated as ND.

Figure 5 Groundwater Isoconcentration Maps

Develop, down to non-detect (ND) levels, all groundwater isoconcentration maps outlined below. Use Figure 2 as the template and show all monitoring wells and sampling points, with ID numbers, sampled during the investigation. Label sample points and isoconcentration lines with the concentration in ppb. If the constituent being mapped was detected in less than three sampling locations, submit a map showing the sample points labeled with the concentration in ppb but do not contour. Maps 5.7, 5.8 and 5.9 should only be submitted if the contaminant is detected in three or more sampling locations. Sample points shall be labeled with concentration in ppb.

5.1 Groundwater Probe Survey - Total BTEX in probes
5.2 Total BTEX in wells

5.3 Benzene in wells
5.4 1,2 Dichloroethane in wells
5.5 MtBE in wells
5.6 Naphthalene in wells
5.7 EDB in wells
5.8 TPH OA-1 in wells
5.9 TPH OA-2 in wells

Figure 6 Separate Phase Product Isopach Map

Develop a product isopach map, using Figure 2 as the template, any time separate phase product is detected. Each map shall include the location of all monitoring wells or sampling points. If more than one product is identified, specify the products and their approximate percent of the total product phase.

Figure 7 Wells within ¼ Mile*

The map will be enlarged such that the facility is located at or near the center of the map. The map will have a scale of approximately 1" = 300' and be on an 11" x17" page. All wells will be clearly marked and labeled as to the current use (eg: industrial, public drinking supply, monitoring). If the contaminant plume is expected to extend beyond ¼ mile from the facility, the map (scale) will be modified to include all wells potentially impacted by the release. Well descriptions may appear on an attached table. Generalized groundwater flow direction will be clearly indicated.

Figure 8 Land Use within ¼ mile*

Map will clearly indicate current land uses within a ¼ mile radius of the facility. The map will have a scale of approximately 1" = 300' and be on an 11" x17" page. The facility will be at or near the center of the map. If the contaminant plume is expected to extend a distance greater than ¼ mile, the scale of the map will be changed to include the areas potentially affected. At a minimum, the maps must include either residential or non residential. If a sensitive receptor such as a subsurface structure, school or hospital is present within this area, that structure must be indicated on the map.

* Maps must be CAD drawings or enhanced versions of the most recent aerial photographs of the specified area. Locations and names of all major streets must be included on the maps. Topographic maps will not be accepted.

SECTION 4.0DRILLING LOGS

Include schematics for each boring drilled and each monitoring well installed during the investigation. At a minimum, the following information must be included on each log:

1) the boring and monitoring well ID number,
2) the date the drilling was conducted,

3) the names of the Driller and Geologist,
4) the drilling method/type of drill rig, soil sampling equipment, and field screening analysis equipment used,
5) borehole and casing diameters,
6) field screening results plotted at the depth measured,
7) a continuous soil profile will be developed with detailed lithologic descriptions using the Unified Soil Classification System (USCS). The detailed lithological descriptions must correspond to the depths measured during drilling. The profile will also include the color, texture, sorting, size and shape of grains, and any other pertinent information,
8) observations such as fracturing or solution cavities, organic content, staining, odor, moisture changes (dry, moist, saturated), and any other pertinent features,
9) a monitoring well construction diagram that accurately depicts the depth of the screen, blank casing, filter pack, bentonite seal, grout seal, well-head completion, and the surveyed elevations of the top of the casing and the permanent datum control point (see Section 3.3.11.5 of this RFP) on the pad or flush mount rim,
10) for plugged borings, plugging material and interval of each material,
11) depth the saturated zone was encountered during drilling and elevation of static water level,
12) indicate where laboratory and hydrologic samples were collected, including interval.

The monitoring well construction diagram and the corresponding drilling log must be shown on the same page, and be drawn at the same vertical scale. Logs must be typed. Do not use abbreviations. Do not reference or include in this section any discussion, tables, photographs, maps, or other documents included in this or any other report.

SECTION 5.0PHOTOGRAPHS

5.1 All photographs shall be color print or color copies. Photographs should be taken from an appropriate distance and angle for the subject to be clearly visible and identifiable. Do not reference or include in this section any discussion, tables, drilling logs, maps, or other documents that are included in this report.

5.2 Each photograph shall illustrate the spatial relationships of the various components at the site.

5.3 Each photograph shall include a description of the scene, the direction the picture was taken from, and the date of the photo.

5.4 Include at a minimum the following photographs, two photographs per page.

5.4.1 Two photographs of the entire facility from two distinctively different directions.

5.4.2 Two photographs identifying the current and/or former tank basin(s), above ground tank location(s), or other system components that were identified as the source(s) or potential source(s) of contamination. Outline the areal extent of the tank basin(s) and line trench(es). Identify in the description any product recovery or remediation system components.

5.4.3 One photograph each of two different monitoring wells completed by the vendor as part of this investigation. Include the well number in the description. One of the photographs will have the cast iron cap removed to show the lockable waterproof cap, KDHE numbered well lock and attached State of Kansas Site ID Well tag.

5.4.4 Two photographs showing the scarified soils on site.

SECTION 6.0DOCUMENTATION

Include all information requested in the following format. Do not reference or include in this section any discussion, tables, photographs, maps, or other documents that are included in this report or any other report.

Appendix 1 KDHE Site Identification Forms

Include a copy of the completed KDHE Site Identification Form for each well installed or tagged.

Appendix 2 KDHE Water Well Records

Include a copy of the KDHE Water Well Record (form WWC-5) for each monitoring well installed.

Appendix 3 Unsaturated Zone Hydrologic Data

Include all raw data (laboratory test data, grain size distribution plots, etc.) and calculations used to determine the unsaturated zone hydrologic characteristics. Identify the variables and provide the calculated or assigned values. Include all information submitted by the laboratory on sheets provided by the laboratory.

Appendix 4 Saturated Zone Hydrologic Data

Include all raw data (slug test data, plots of graphical analyses, laboratory test data, grain size distribution plots, etc.) and calculations used to determine the saturated zone characteristics. Identify the variables and provide the calculated or assigned values. If values are calculated by a computer program, include a copy of the computer output and state the program used.

Appendix 5 Laboratory Data

Include all analytical laboratory reports and Chain of Custody documents. All lab reports must include the following QA/QC data for all samples:

- Calibration check against the true value or initial calibration every 20 samples. This should be a mid-range calibration.
- Surrogate % recovery for each soil and water sample.
- Matrix spike and duplicate for each constituent every 20 samples or each run, whichever is more frequent.

- Method blank and duplicate for each extraction.
- Trip blank for each shipping container.

Reporting limits for all samples must be the Practical Quantitation Limit (PQL) for that sample. Reporting limits set at the MCL is not acceptable. Reports for all OA-2 analyses must also include copies of the reference standard chromatographs used. Include results of free product analyses (including laboratory chromatographs) if product samples were collected.

Appendix 6 Field Notes

Field notes must be hand-written and signed by the individual who performed the work described therein. Each page must be signed as the notes are being taken. Include copies of the following:

1) the Field Geologist's notes from the groundwater survey, if a groundwater survey was conducted,
2) all drilling logs, soil sampling notes, and monitoring well completion notes,
3) groundwater sampling notes recording, for each well sampled, the water depth and total depth; the volume, in gallons, of water removed for well development (see Section 6.2.5 and ATTACHMENT H of this RFP) and the volume, in gallons, of water purged before sampling; the name, address, and telephone number of the well owner and the site tenant if any private wells are sampled,
4) the Field Geologist's notes from the slug tests, and
5) any and all other field notes recorded during the investigation.
6) Field notes must include the daily chronological events. This includes, time of day each boring/well was initiated, completed, sampled, static water level measured, triangulation calculations and all pertinent information relevant to the assessment. Field notes should not include a general summary of methods and procedures used during the assessment.

Appendix 7 Reports, Access Agreements and Lien Releases

Include copies of the following:

1) the RLS surveyor's report,
2) the KDHE BOW water well search report. and
3) all signed access agreements (see Section 3.3.9 of this RFP).
4) copy of the site specific Bureau of Water waiver to install flush mount wells
5) copy of the wastewater disposal waiver letter from the Bureau of Water
6) all signed lien releases
7) Documentation of property record search used to complete Source History in Section 1.0 of the Site Summary.

Appendix 8 Groundwater Probe Data

If a groundwater survey was conducted, include all groundwater survey analytical results. The groundwater survey report must bear the name of the company and/or the individual that conducted the work.

Appendix 9 Off-Site Waste Handling Documentation

Provide documentation of how wastes removed from the site were handled and/or treated, including the authorization for wastewater disposal.

Electronic Data

The following information must be supplied on a Compact Disc (CD) after the final report has been approved. The CD will contain the following information.

1) The following portions of the final report must be submitted in any word processing document.
4.5.2 - Cover Page
4.5.3 - Table of Contents
4.5.6 - Final Report Format, Section 1.0, Site Summary

2) The data included in Tables 2.1 through 2.8, under Section 2.0 Tables, in section 4.5.6, Final Report Format will be submitted in Excel or Quattro Pro spreadsheet or in Microsoft Access Database format.

3) Figures 2 through 6 under Section 3.0 Maps, in section 4.5.6, Final Report Format will be submitted in CAD files in a DXF interchange format (preferred) or as a JPG (Joint Photographic Experts Group format). The file must be named according to one of the following conventions. Site name, last five digits of project code followed by .dxf or . jpg. Example: ABCgasstation12375.dxf

4.6 MONITORING REPORTS

4.6.1 All monitoring reports will be submitted according to the most recent Monitoring RFP. This document can be acquired at http://www.kdhe.state.ks.us/tanks/rfp/index.html or by contacting Mr. Trevor Flynn at 785-296-0699.

SECTION 5.0 REIMBURSEMENT

5.1 REIMBURSEMENT GUIDELINES

5.1.1 All Vendor invoices must be submitted to the O/O for payment.

5.1.2 Total reimbursement will not exceed the lesser of the actual costs incurred for each line item or the total cost for each line item in the Project Bid Proposal Sheet unit pricing.

5.1.3 The Vendor will only receive payment for work conducted and accepted in accordance with the specifications outlined in this document.

5.1.4 Payment to the Vendor will be prorated in accordance with actual work performed (i.e. if only 50% of the scheduled drilling activities are required, 50% of the drilling activities will be reimbursed). The following categories will be prorated:

Assessment Phase - Drilling Activities (excluding mobilization), Surveying, Hydrologic Tests, On Site Waste Handling and Treatment, and Sampling and Analytical.

Monitoring Phase - Field Staff (if only 50% of the scheduled samples are required, 50% of the field hours will be reimbursed), On Site Waste Handling and Treatment, and Sampling and Analytical.

5.1.5 The Vendor may submit invoices for reimbursement at the following stages of the investigation phase:

Completion	**Invoice Amt.**	**Pay Amount**
Work Plan,	100%	90% of the approved invoiced amount. Work must be completed.
Drilling	100%	90% of the approved invoiced amount. Work must be completed.
Sampling, Analytical, Hydrologic Testing	100%	90% of the approved invoiced amount. Work must be completed.
Final Report	100%	90% of the approved invoiced amount. Work must be completed and the report received by KDHE. Balance of the Contract Value upon approval of the report

5.1.6 KDHE will review the Final Report within sixty (60) calendar days and submit written comment to the Vendor, or if approved, the remaining 10% will be released. If KDHE fails to review the Final Report and approve it or provide written comment within the sixty (60) calendar day time period, the remaining 10% will be released.

5.1.7 Written notification of the Final Report approval will include notice of KDHE's decision on whether or not the monitoring phase will be implemented. If the monitoring phase is implemented, the Vendor may submit invoices for reimbursement following submittal of the report for each monitoring event. Payment will be at 100% of the approved invoiced amount.

5.2 DOCUMENTATION REQUIREMENTS

5.2.1 Daily time sheet logs for all office and field activities must accompany all vendor invoices for services provided. Field time sheets must be signed by the Vendor on-site supervisor and the on-site O/O or O/O representative. Daily time sheet logs included in ATTACHMENT F should used for this purpose; the vendor's time records can be substituted provided they include all the information on the form in ATTACHMENT F and are signed by the supervisor of the staff person being billed.

5.2.2 Each line item must be invoiced in the same format (rates and units) as the Bid Proposal Sheets.

SECTION 6.0PROPOSAL AND WORK SPECIFIC DEFINITIONS

6.1 PROPOSAL DEFINITIONS

6.1.1 BORING PERMITS

This item shall include the cost charged by the local government entity for drilling or installing a soil boring or monitoring well on city property, city easements, or any other property. Costs for boring permits will not be reimbursed without a valid receipt from the entity issuing the permit.

6.1.2 DECONTAMINATION

This item shall include the per foot cost for all sampling and drilling decontamination equipment and supplies.

6.1.3 DRILL RIG /WITH CREW

This item shall include all costs associated with use of the drilling rig, drilling crew, and all drilling equipment. This should only include the driller and helper(s). Do not include any professional field staff responsible for collecting and conducting field analyses of drilling samples. This item must be bid on a footage basis. If additional footage is required, reimbursement will be on a per foot basis.

6.1.4 FIELD GEOLOGIST

This item shall include the cost for the Field Geologist as defined in Section 1.3.2 of this document. This item shall be bid on an hourly basis and for the number of hours necessary to perform the tasks specified for the complete assessment phase scope of work.

This item must include on page 1 of EXHIBIT 2 only the Field Geologist cost directly associated with on-site drilling activities. Do not include time for conducting the groundwater probe survey, as this is included in the Groundwater Survey cost. This item must include on page 2 of EXHIBIT 2 only the Field Geologist cost directly associated with hydrologic testing.

6.1.5 FIELD TEST EQUIPMENT

This item shall include the per day cost to use the listed field analytical equipment such as a photoionization detector, organic vapor analyzer, colorimetric detector tubes, interface probe, etc.

6.1.6 FIELD WORK PLAN

This item shall include all labor and equipment costs to properly complete and submit the Work Plan Worksheet with the required maps and photos. The Work Plan Worksheet is included as ATTACHMENT E.

6.1.7 FINAL REPORT (ASSESSMENT PHASE)

This item shall include all labor and equipment cost to properly complete and submit the Final Report. The Final Report requirements and format are included in SECTION 4.5.6 of this document.

6.1.8 HEATED HEADSPACE

This item shall reflect the per test cost for collecting groundwater samples from existing monitoring wells, and analyzing the samples using heated headspace or equivalent methodology, during the groundwater survey. The samples must be analyzed for the same constituents outlined in the Probe Survey, using the same detection limits.

6.1.9 LAB METHODS

This item shall include designation of the EPA methods (see ATTACHMENT C of this RFP) to be used for laboratory analysis of soil and water samples.

6.1.10 LABORATORY NAME

This item shall include the designation of the KDHE-approved laboratory that will be performing the analyses of water and soil samples.

6.1.11 MONITORING MOBILIZATION

This item shall include all costs to transport staff and equipment to conduct the monitoring. This item will be bid on a per event basis and is inclusive of all vehicle costs, incidental costs (i.e. tolls, maintenance expense, gas, mileage etc.) and staff travel time.

6.1.12 MONITORING WELLS

This item shall include the cost to complete permanent monitoring wells which will include the blank well casing and screen, the annular space gravel pack, the annular seal, and grout (see ATTACHMENT A). This cost shall be bid on a per foot basis. KDHE will not reimburse for improperly or illegally constructed wells, or wells which cannot be used for long term monitoring at the site (Pre approved temporary monitoring wells are an exception).

6.1.13 OTHER

This item shall include all costs not included in other items of the cost proposal sheet. If this category is used, the bidder must list each item and briefly explain its function.

6.1.14 OTHER STAFF (ASSESSMENT PHASE)

This item shall include the cost for other staff that are necessary to properly complete the tasks required in the categories listed. Provide the title of the individual who will perform the duties. This item shall be bid on an hourly basis.

6.1.15 PER DIEM

This item shall be a fixed price for one person to cover lodging and expenses. Per Diem will be approved only for each night an employee is required to remain on site overnight.

6.1.16 PROBE SURVEY

This item shall include the per probe cost for conducting the soil and/or groundwater probe survey. The per probe cost shall include all activity relative to each probe; i.e., mobilization, necessary equipment, probe installation to groundwater, groundwater, soil and/or soil vapor extraction, field analysis of the sample, removal of the probe, crew member(s) to conduct the survey, and Field Geologist to oversee the survey. The equipment used for analyzing samples during a field survey must detect and quantify concentrations for each specified compound (benzene, toluene, ethylbenzene, and xylene) with detection levels equal to or less than the smallest KDHE Tier 2 Risk-Based Screening Levels for each constituent. Any contamination detected, even if below KDHE Tier 2 Risked-Based Levels, must be documented and included in the probe survey report.

6.1.17 PROBE SURVEY REPORT

This item shall reflect the cost to produce and submit two copies of a map indicating probe point locations, associated field analytical data and proposed locations for soil borings and permanent monitoring well placement. This map will be reviewed by the KDHE Project Manager within seven (7) calendar days. The KDHE Project Manager will approve the proposed boring and permanent monitor well placement or request revisions to those placements.

6.1.18 PRODUCT SAMPLES

This item shall include all costs associated with the collection and analysis of the product sample (i.e. labor, equipment, shipping, etc.). The purpose of the product sample is to determine the type of petroleum product or mixture of products (kerosene, used motor oil, diesel, weathered/unweathered gasoline, fuel oil, jet fuel, etc.) present, including any not previously known to be present, that could affect selection of an appropriate remediation design and/or technology. The product sample analysis must include measurement of the specific gravity. Provide the per sample cost for analysis and associated costs; it is expected that at least two complementary analyses will be required to achieve this goal.

6.1.19 QUARTERLY SAMPLING REPORT

This item shall include all labor and equipment costs to properly complete and submit each Quarterly Sampling Report. The Quarterly Sampling Report requirements and format are included in Section 4.6.6. of this document. For purposes of this proposal, assume that all Groundwater Isoconcentration maps required for the assessment phase will be required at each monitoring event.

6.1.20 RIG MOBILIZATION

This item shall include all costs for moving drilling equipment, drilling personnel, and drilling supplies to and from the site, and to locations throughout the area to be drilled. Only one mobilization has been allowed. Costs for multiple rigs, if required, must be included.

6.1.21 SATURATED ZONE (Permeameter, Grain Size, Slug Out Test)

This item shall include the cost to conduct a minimum of two permeameter tests per site using ASTM Method D2434-68(2000). Each test must be performed on a soil sample collected from the saturated zone.

A grain size analysis utilizing ASTM method D 422-63(98) must be conducted on each sample prior to performing the permeameter tests. This information should be used to determine whether to conduct a constant-head permeameter test or a falling-head permeameter test on each sample. A constant-head permeameter test should be conducted on noncohesive sediments with hydraulic conductivities greater than approximately 10^{-3} centimeters per second. Constant head tests must be conducted in accordance with ASTM Standard Test Method D 2434-68 (2000). A falling-head permeameter test should be conducted on cohesive sediments with hydraulic conductivities lower than approximately 10^{-3} centimeters per second. Falling-head tests must be conducted in accordance with ASTM Standard Test Method D 5084-00-e1. If the appropriate test is not conducted, reimbursement for the incorrect test will be denied. If any hydrologic test other than a permeameter test is requested, it will be indicated on page 2 of Exhibit 2.

Under certain circumstances the KDHE Project Manager may request two grain size analysis be performed using ASTM method D 422-63(98). Grain size analysis will include hydrometer test if greater than 70 percent of the mass of the sediment passes through the #200 sieve. Estimated values for hydraulic conductivity, transmissivity and storativity must be provided using information from the grain size analyses.

On occasion two slug out tests may be requested. Slug-out tests must be conducted using a pneumatic or weighted slug, or by removing a known volume of water from the well. Wells must be properly developed and allowed to return to static conditions before conducting the slug test. Development water is not to be used as the slug.

Tests must be conducted in different wells. Do not introduce any water into the formation. The slug-out tests must be conducted in accordance with guidelines outlined in "EPA Method 9100 3.4 Single well tests."

Do not conduct the second slug test if the initial one fails unless directed otherwise by the KDHE Project Manager.

Laboratories which perform analysis using ASTM methods must be accredited for the specific method(s) by the Army Corp of Engineers or an approved equivalent accreditation entity.

Soil samples collected to determine the physical properties must be collected from a zone that is similar to the zone of probable petroleum migration but located in an area that has not been impacted by any released substance.

6.1.22 SOIL BORING PLUGGING

This item shall include all costs for labor, equipment and supplies to plug all soil borings in accordance with KDHE Regulations and Guidelines. This item must be bid on a per foot basis.

6.1.23 SOIL SAMPLES

This item shall include all costs associated with the collection and analysis of samples (i.e. labor, equipment, shipping, etc.). All samples shall be analyzed in accordance with the criteria provided in this document for the constituents outlined in EXHIBIT 2. Provide the per sample cost for collection and analysis for each constituent indicated.

6.1.24 SOIL WASTE HANDLING AND TREATMENT

This item shall include costs for handling and treating drill cuttings generated during the field investigation. Methods of handling and treatment of soils will be as follows. Scarification achieved by spreading hydrocarbon contaminated soils to a 6" thickness or less across the site and turning until the contamination level, based on field screening methods, falls below KDHE standards for soil remediation. Scarification of soils must be conducted at a location away from receptors such as sewer inlets, open boreholes, etc. If soil waste cannot be treated on-site, the plan for and method of treatment must be included in the work plan. Handling of soils in a manner other than that outlined in the work plan will not be reimbursed for unless approved by the KDHE Project Manager. All applied methods must comply with local, state, and federal laws. These handling and treatment methods are not approved for waste saturated with petroleum products. This item must be bid on a lump sum basis. No containerized soils/cuttings will remain on site following drilling activities.

6.1.25 STAFF (MONITORING)

This item shall include the cost for the Sampling Technician as defined in Section 1.3.11 of this document. This item shall be bid on an hourly basis and for the total number of hours necessary to sample and measure the wells specified for all four events in the monitoring phase scope of work. Do not include staff travel time, included in item 6.1.11, in this item

6.1.26 SUPPORT VEHICLE (ASSESSMENT PHASE)

This item shall include the cost for all vehicles necessary to transport all staff to conduct the investigation. This item will be bid on a per day basis per vehicle and is inclusive of all incidental costs i.e. tolls, maintenance expenses, fuel, etc.

6.1.27 SURVEYING

This item shall include the cost for surveying by a Registered Land Surveyor. This item shall be bid in two parts on a per monitoring well basis to accommodate the minimum and maximum scope of work. If less than four monitoring wells are installed, this item will not be performed.

6.1.28 UNSATURATED ZONE (Permeameter, Grain Size, Total Organic Carbon, Water Content, Bulk Density)

This item shall include the cost to conduct a minimum of two permeameter tests per site using ASTM Method D2434-68(2000). Each test must be conducted on different lithological soil samples collected in the area(s) of the unsaturated zone determined to be the most highly contaminated using field testing methods.

A grain size analysis utilizing ASTM method D 422-63(98) must be conducted on each sample prior to performing the permeameter tests. This information should be used to determine whether to conduct a constant-head permeameter test or a falling-head permeameter test on each sample. A constant-head permeameter test should be conducted on noncohesive sediments with hydraulic conductivities greater than approximately 10^{-3} centimeters per second. Constant head tests must be conducted in accordance with ASTM Standard Test Method D 2434-68 (2000). A falling-head permeameter test should be conducted on cohesive sediments with hydraulic conductivities lower than approximately 10^{-3} centimeters per second. Falling-head tests must be conducted in accordance with ASTM Standard Test Method D 5084-00-e1. If the appropriate test is not conducted, reimbursement for the incorrect test will be denied.

Under certain circumstances the KDHE Project Manager may request two grain size analysis be performed using ASTM method D 422-63(98). Grain size analysis will include hydrometer test if greater than 70 percent of the mass of the sediment passes through the #200 sieve. An estimated value for hydraulic conductivity, must be provided using information from the grain size analyses.

Total organic carbon will be determined using the Walkley-Black method or ASTM Method D2974-00. Water content will be determined ASTM Method D 2216-98. Bulk density will be determined using ASTM Method D 2937-00e1.

Laboratories which perform analysis using ASTM methods must be accredited for the specific method(s) by the Army Corp of Engineers or an approved equivalent accreditation entity.

Soil samples collected to determine the physical properties must be collected from a zone that is similar to the zone of probable petroleum migration but located in an area that has not been impacted by any released substance.

6.1.29 WASTEWATER HANDLING

This item shall include the cost to handle, treat and dispose of waste water generated during field activities. Waste water will include, but not be limited to, development, purge and decontamination water. Methods for handling and treating waste water will be as follows. Air stripping, granulated activated carbon or other treatment may be acceptable. The Vendor will properly dispose of waste water when the Vendor obtains approval from the appropriate authority and/or the KDHE Bureau of Water. All applied methods must comply with local, state, and federal laws. These handling and treatment methods are not approved for free product. No water is to be stored on site. This item must be bid on a lump sum basis per event.

6.1.30 WATER SAMPLES

This item shall include the total cost associated with the collection and analysis of water samples (i.e. mobilization, purging, labor, equipment, shipping, etc.). All samples shall be analyzed in accordance with the criteria provided in this document for the constituents outlined in EXHIBIT 2. This item must be bid on a per sample basis. If additional samples are required, reimbursement will be on a per sample basis.

6.1.31 WELL COMPLETION

This item shall include the cost for a monitoring well pad, flush or stick up protective locking cover, lock, well development, and well tagging requirements. All monitoring wells must be completed in accordance with regulations and KDHE guidelines (see ATTACHMENT A) and must be locked prior to demobilization. All wells must be developed to the extent that each well can be fully used for its intended purpose. This cost shall be bid on a per well basis.

6.2 WORK SPECIFIC DEFINITIONS

6.2.1 INITIAL SOIL BORING(S)

Unless directed otherwise by KDHE in the Site Specific Information (EXHIBIT 1), the initial soil boring(s) will be drilled at the location(s) nearest the reported source(s) of contamination and continue to groundwater. In locations where no groundwater is expected to be encountered the initial soil boring(s) will be advanced until one of the following criteria is met: 1) the hydrocarbon contamination level[1] of soil samples as detected using the appropriate field testing equipment falls below 50 meter units (or 50 ppm concentration relative to total petroleum hydrocarbons) and is consistently decreasing downward, or 2) the consultant is directed by KDHE to discontinue drilling.

6.2.2 NO GROUNDWATER CONTAMINATION

Unless directed otherwise by KDHE, a minimum of four (4) monitoring wells must be drilled and installed regardless of whether groundwater contamination is detected in the initial soil boring(s).

If groundwater is not encountered and drilling has been discontinued in accordance with 6.2.1, the remaining borings will be drilled to identify all potential sources of contamination, and to delineate and evaluate the degree of soil contamination. The borings will be placed to accomplish the Investigation Goals outlined in SECTION 3.3 of the Statement of Work. Only use the number of borings necessary to accomplish the investigation goals. Soil boring depth criteria for the remaining borings will be identical to the criteria established for the initial soil boring.

[1] Note that the contaminant may be diesel fuel and/or gasoline, therefore standard field testing methods will need to be augmented by close physical examination of samples. If diesel is physically detected in a sample, any criteria for discontinuing drilling based on a concentration value of 100 ppm or less hydrocarbons detected by PID, OVA or colorimetric tubes cannot be satisfied by such an instrument reading (if diesel or other petroleum products is physically detected in a sample, consider the concentration to be greater than 100 ppm hydrocarbons).

6.2.3 DISSOLVED PHASE ONLY

If soil contamination extends to groundwater in the initial boring(s) (see definition for initial soil boring(s)), or if groundwater contamination has been confirmed, the initial soil boring(s) will be completed as a monitoring well(s), and the number of soil borings outlined in the Site Specific Work Sheet in EXHIBIT 1 for this site condition may be drilled to define both soil and groundwater contamination. The number of soil borings to be completed as monitoring wells in this site condition is outlined in the Site Specific Work Sheet. The monitoring wells and soil borings will be placed to accomplish the Investigation Goals outlined in SECTION 3.3 of the Statement of Work. Plugged borings should be used primarily for the delineation of soil contamination. Only use the number of borings and wells necessary to accomplish the investigation goals. One of the allotted monitoring wells must be installed up gradient of the identified source(s).

6.2.4 FREE PHASE PRODUCT

The definition and procedures for this site condition are identical to the Dissolved Phase Only work specific definition (Section 6.2.3) with the exception that additional soil borings and monitoring wells may be used to delineate the free phase contaminant plume, and a product sample will be collected and analyzed. The number of additional soil borings and wells to be used for this site condition is outlined in the Site Specific Work Sheet.

If free product is not found, monitoring wells allocated for the free phase product scenario may be used for dissolved phase delineation if prior approval has been granted either verbally or in writing by the KDHE Project Manager. Approval must be obtained prior to demobilization from the site.

6.2.5 WELL DEVELOPMENT

After a monitoring well is constructed, it is necessary to remove any debris and mud that is introduced by the drilling process, and fine particles from the immediate vicinity of the well. This process is called well development, and it serves two primary purposes:

A. Water which has been exposed to the drilling and completion process is not representative of the water in the aquifer. This water is removed, so that a more representative sample may be obtained. Drilling fluids are also removed.

B. Fine particles are removed from the formation and gravel pack in order to permit faster flow of water into the well. This permits easier purging and sampling of the well, more accurate measurement of the Static Water Level (SWL), and prevents sand from accumulating in the well screen and from entering pumps or samples.

Adequate well development requires that water in the well be violently surged or agitated and then removed. The surging loosens mud and fine sand particles outside the well screen, so that they may be removed from the well. Surging of the water may be accomplished in several ways: the water in the well may be pumped rapidly and intermittently, it may be agitated with air pressure (air lift pumping), or it may be surged by the use of a bailer or surge block. Any air lift pumping must be accomplished by use of oil-free and contaminant-free air.

Well development should also include the removal of a quantity of water equal to between 5 and 10 times the volume of the fluid column in the well (5 to 10 well volumes). The well volume is calculated by using the diameter of the borehole and the depth of static water in the well. See ATTACHMENT H for calculation of well volume.

The criteria for adequate development of a well are:

A. The fluid flow into the well is relatively unrestricted, based on the nature of the formation. That is, the water level recovers at a characteristic rate for a particular formation following pumping or bailing of the well.

B. The quality of water removed from the well has reached a steady state value. This may be determined of several ways:

   - the water should no longer be muddy, (alternatively, the turbidity has reached a constant value); or
   - pH, dissolved oxygen, conductivity, and temperature measurements have reached a constant value. (No more than 10% deviation for three consecutive readings.)

ATTACHMENT A

KDHE MONITORING WELL DESIGN

STANDARD MONITORING WELL DESIGN

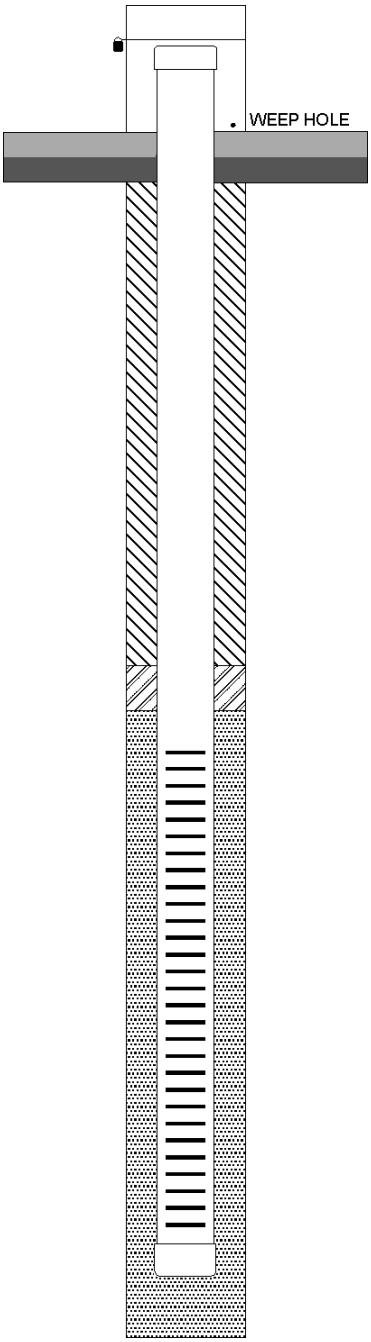

WELL HEAD PROTECTOR
Steel or PVC cover with water tight cap, set in the concrete pad. Should be equipped with a locking device to prevent tampering. Cover should provide adequate space to allow access to the well.

CONCRETE PAD
Should be a minimum of 2'x2'x4" thick to secure the protective cover, prevent pooling of water and vegetative growth around the well, and allow for placement of a surveyor pin.

IMPERVIOUS GROUT
The upper 20' of the well must be grouted with impervious grout as required by K.A.R. 28-30-2k and 6b (see next page for quotes)

SCREEN SEAL
A 2' layer of bentonite chips or pellets should be placed on the gravel pack to prevent infiltration of grout into the gravel pack.

GRAVEL PACK
The gravel pack should be sized to prevent infiltration of fines into the well. The source of the gravel pack material should be carefully determined to eliminate the possibility of contamination of the well during construction.

WELL CASING
Well casing shall terminate not less than one foot above ground surface. The following well casings are acceptable for monitoring well use.
2" I.D. PVC schedule 40 or thicker
4" I.D. PVC SDR 26 or thicker
5" I.D. PVC SDR 26 or thicker
Steel casing shall be 10 gauge or thicker

All casing materials must be connected without use of solvents, glues, or materials which would induce contamination into the well.
Some other casings are approved for well construction but are not as commonly used.
All casing materials must be selected so that incompatibility problems do not occur.

SCREEN
Wells must be equipped with manufactured well screen which provides adequate communication with the aquifer to provide a representative sample without allowing the sediments to enter the well.

CONTRACTOR LICENSING
All monitoring wells must be constructed by a licensed water well contractor as specified under K.A.R. 28-30-3. (See next page for quotes)

K.A.R. 28-30-2 (k) Grout

Grout means cement grout, neat cement grout, bentonite clay grout or other material approved by the department used to create a permanent impervious watertight bond between the casing and the undisturbed formation surrounding the casing or between two or more strings of casing.

(1) "Neat cement grout" means a mixture consisting of one 94 # bag of portland cement to 5-6 gallons of clean water.

(2) "Cement grout" means a mixture consisting of one 94 # bag of portland cement to an equal volume of sand having a diameter no larger than 0.080 inches (2 millimeters) to 5-6 gallons of clean water.

(3) "Bentonite clay grout" means a mixture consisting of water and comercial grouting or plugging sodium bentonite clay containing high solids such as that manufactured under the trade name of "volclay grout", or an equivalent as approved by the department.

(A) The mixture shall be as per the manufacturer's recommendations to achieve a weight of not less than 9.4 pounds per gallon of mix. Weighing agents may be added as per the manufacturer's recommendations.

(B) Sodium bentonite Pellets, tablets or granular sodium bentonite may also be used provided they meet the specifications listed in K.A.R. 28-30-2(k), (3), above.

(C) Sodium bentonite products that contain low solids, are designed for drilling purposes or that contain organic polymers shall not be used.

K.A.R. 28-30-6 (b) Grouting

(1) Constructed or reconstructed wells shall be sealed by grouting the annular space between the casing and the well bore from ground level to a minimum of 20 feet or to a minimum of five feet into the first clay or shale layer, if present, whichever is greater. If a pitless well adapter or unit is being installed, the grouting shall start below the junction of the pitless well adapter or unit where it attaaches to the well casing and shall continue a minimum of 20 feet below this junction or to a minimum of five feet into the first clay or shale layer whichever is greater.

(2) To facilitate grouting, the grouted interval of the well bore shall be drilled to a minimum diameter at least three inches greater than the maximum outside diameter of the well casing. If a pitless well adapter or unit is being installed on the well's casing, the well bore shall be a minimum diameter of at least three inches greater than the junction diameter of the well casing through the grouted interval below the junction of the pitless well adapter or unit where it attaches to the well casing.

(c) If groundwater is encountered at a depth less than the minimum grouting requirement, the grouting requirement may be modified to meet local conditions if approved by the department.

K.A.R. 28-30-3 Licensing

(a) Eligibility. To be eligible for a water well contractor's license an applicant shall:

(1) Have passed an examination conducted by the department; or

(2) Meet the conditions contained in subsection (c).

(b) Application fees.

(1) Each application shall be accompanied by an application fee of $ 10.00.

(2) Before issuance of a water well contractor's license, each contractor shall pay a license fee of $ 100.00 plus $ 25.00 for each drill rig operated by or for the contractor. These fees shall accompany the application and shall be by bank draft, check or money order payable to the Kansas Departmetnt of Health and Environment- water well lincensure.

(c) Reciprocity.

(1) Upon receipt of an application and payment of the required fees from a nonresident, the secretary may issue a license, providing the nonresident holds a valid license from another state and meets the minimum requirements for licensing as prescribed in K.S.A. 82a-1207, and any amendments thereto.

(2) If the nonresident applicant is incorporated, evidence shall be submitted to the Department of Health and Environment showing that the applicant meets the registration requirements of Kansas Secratary of State.

(3) Nonresident fees for a license shall be equal to the fee charged a Kansas contractor by the applicant's state of residence but shall not be less than $ 100.00. The application fee and drill rig license fee shall be the same as the Kansas resident fees.

FLUSH-MOUNT WELL CONSTRUCTION DETAIL

(Not to Scale)

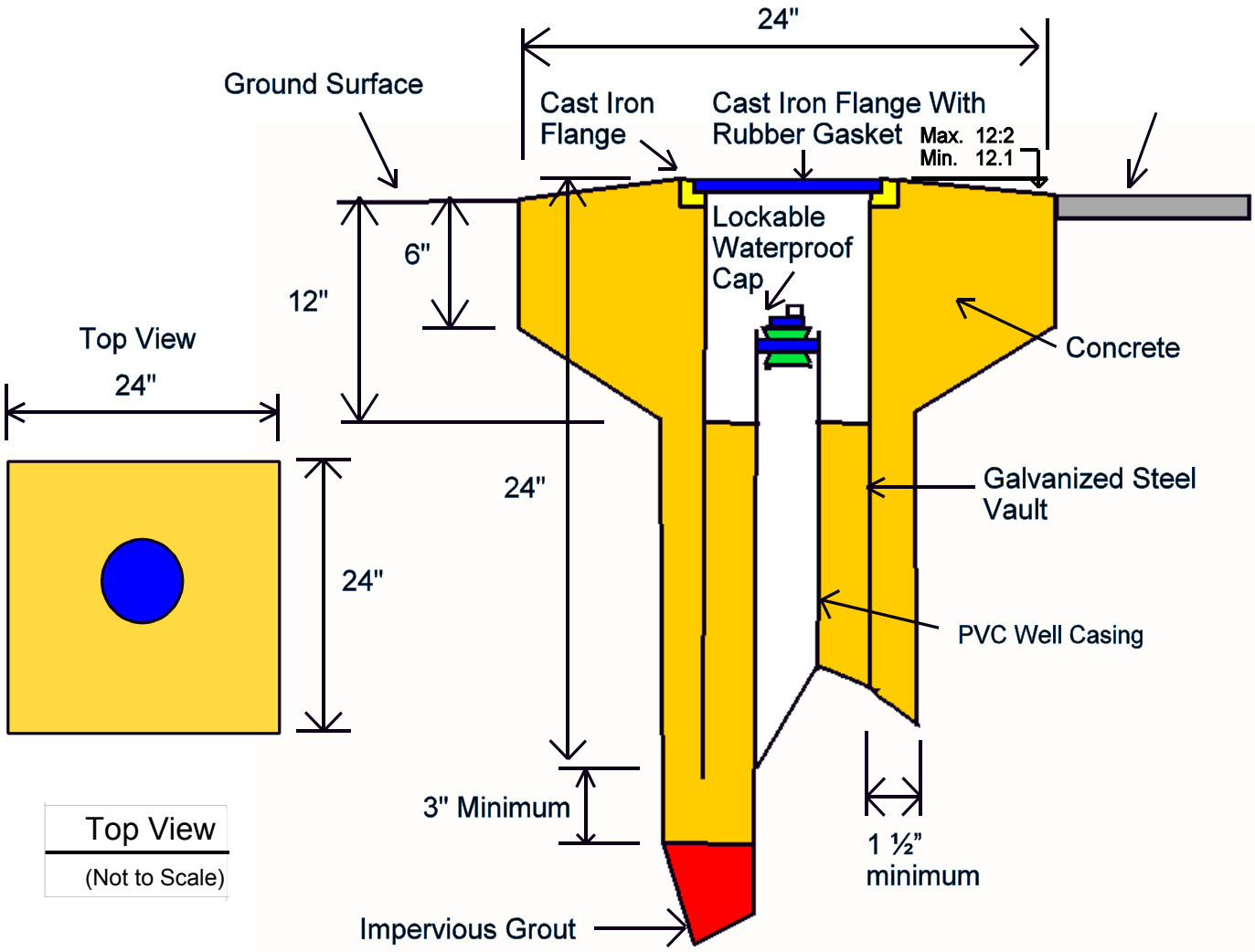

Top View
(Not to Scale)

Casing	2"	4"
Vault	6"	9"
Concrete Pad	24" x 24"	24" x 24"

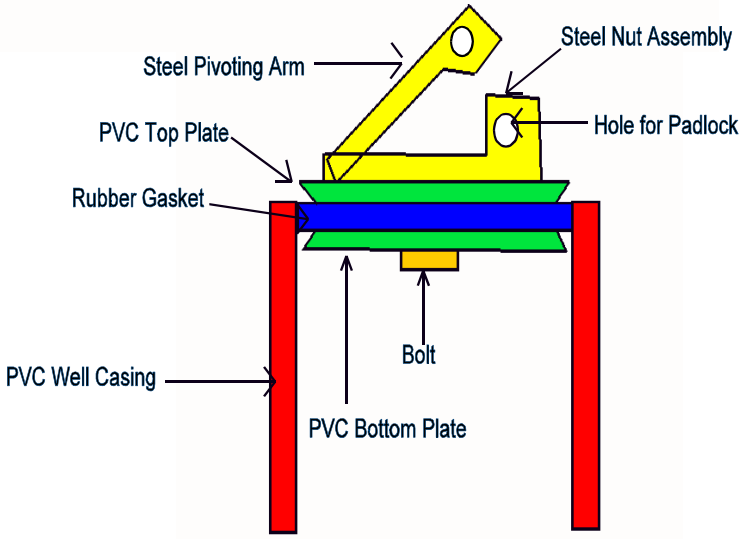

LOCKABLE WATERPROOF CAP

(Not to Scale)

Sept. 10, 1993

MONITORING WELL DESIGN
ADDITIONAL INSTRUCTIONS

FLUSH-MOUNT WELL HEAD COMPLETION:

K.A.R. 28-30-6 (e) does not allow well casing to be terminated less than one foot above finished ground surface. Because storage tank site investigations are often conducted in areas where completing monitoring well heads above grade is not practical, consideration must be given to completing flush-mount monitoring well heads.

If monitoring well must be completed with a flush-mount well head design, a waiver of K.A.R. 28-30-6 (e) must be requested in writing. The procedures for requesting a waiver of this regulation are described as follows:

1) Prior to the monitoring well installation, the written request must be submitted to the address indicated below.

2) The request must contain the following information:

   a. facility name and street address
   b. legal description of the property where the wells are proposed to be located.
   c. number of wells to be installed with flush-mount well heads
   d. reason(s) why the regulation should be waived
   e. approximate depth to groundwater in the local area
   f. the general geology or lithologies expected to be encountered in drilling
   g. specifications and/or diagrams of the vault proposed to be installed including the manufacturer's name and any other descriptive information such as a manufacturer's trade sheet.

3) Wait for approval of the waiver request before completing monitoring wells.

4) When waivers are approved and monitoring wells are installed with a flush-mount wellhead design, the well head completion must be indicated accordingly in the lithologic section of the WWC-5 water well record form. The name of the KDHE contact person that approved the waiver must also be provided in the lithologic section of the WWC-5 form.

Any waiver of regulations applies only to the wells and information indicated in the written request. A verbal request for waiver of regulations may be approved on any additional wells needed for the same area or site. The verbal request must be directed to the phone number below.

MONITORING WELL GROUTING REQUIREMENTS:

K.A.R. 28-30-6, part (b) requires that constructed or reconstructed wells be sealed by grouting the annular space between the casing and the well bore from ground level to a minimum of 20 feet or to a minimum of five feet into the first clay layer, whichever is greater. Part (c) of the same regulation specifies if groundwater is encountered at a depth less than the minimum grouting requirement, the grouting requirement may be modified to meet local conditions if approved by the department.

If modifications to the grouping requirements are necessary solely because of shallow groundwater, a waiver or the regulations is not needed.; however, the reason for modifying the grouping requirements must be indicated accordingly on the WWC-5 water well record form. In situations where grouping modifications are required for reasons other than shallow groundwater, a waiver of K.A.R. 28-30-6(b) must be obtained following the same procedures as described for flush-mount well heads above.

Submit requests for waivers and direct any questions on well design regulations to:

Kansas Department of Health & Environment
Bureau of Water, Geology Section
1000 SW Jackson, Suite 420
Topeka, Kansas 66612-1367
Phone: (785)296-5522

ATTACHMENT B

SOIL BORING PLUGGING CRITERIA

K.A.R. 28-30-7(d)

ARTICLE 30 - WATER WELL CONTRACTORS LICENSE; WATER WELL CONSTRUCTION AND ABANDONMENT

This article regulates the construction, reconstruction, treatment and plugging of water wells and sets forth procedures for the licensing of water well contractors as required by K.A.S. 82a-1201 to 82a-1215 and amendments thereto.

28-30-7 Plugging of abandoned wells, cased and uncased test holes.

(d) Plugging of abandoned holes. If the hole penetrates an aquifer containing water with more than 1,000 mg/l, total dissolved solids or is in an area determined by the department to be contaminated, the entire hole shall be plugged with an approved grouting material from the bottom of the hole, up to within three feet of the ground surface using a grout tremie pipe or similar method. From three feet below ground surface to ground surface the plugged hole shall be covered over with compacted surface silts or clays; otherwise, the hole shall be plugged in accordance with the following paragraphs.

(1) Plugging of abandoned cased test holes. The casing shall be removed if possible and the abandoned test hole shall be plugged with an approved grouting material from the bottom of the hole, up to within three feet of the ground surface, using a grout tremie pipe or similar method. From three feet below ground surface to ground surface the hole shall be covered over with compacted surface silts or clays. If the casing cannot be removed, in addition to plugging the hole with an approved grouting material the annular space shall also be grouted as described in K.A.R. 28-30-6 or as approved by the department.

(2) Abandoned uncased test holes, exploratory holes or any bore holes except seismic or oil field related exploratory and services holes regulated by the Kansas Corporation Commission under K.A.R. 82-3-115 through 82-3-117. A test hole or bore hole drilled, bored, cored, or augered shall be considered an abandoned hole immediately after the completion of all testing, sampling or other operations for which the hole was originally intended. The agency or contractor in charge of the exploratory or other operations for which the hole was originally intended is responsible for plugging the abandoned hole using the following applicable method, within three calendar days after the termination of testing or other operations.

(A) The entire hole shall be plugged with an approved grouting material from bottom of the hole, up to within three feet of the ground surface, using a grout tremie pipe or similar method.

(B) From three feet below ground surface to ground surface the plugged hole shall be covered over with compacted surface silts or clays.

(C) For bore holes of 25 feet or less, drill cuttings from the original hole may be used to plug the hole in lieu of grouting material, provided that an aquifer is not penetrated or the bore hole is not drilled in an area determined by the department to be a contaminated area.

WELL PLUGGING/ABANDONMENT REQUIREMENTS

The following requirements supplement section 28-30-7 (d) (1) of article 30 - Water Well Contractor's License: Water Well Construction and Abandonment, located on page 1 of Attachment B.

A) The following requirements will be mandatory for plugging monitoring wells that have **20 feet or greater of grout (including the bentonite plug)**:

1) The well head, concrete pad and protective cover (if above grade completion) must be removed.

2) The casing must be removed if possible. The well must then be filled with an approved plugging material. After the casing or casing void has been filled with an approved plugging material, the casing (if still in place) will be cut off to a level three (3) feet below ground surface. The remaining excavation may then be backfilled with native soils.

3) The property will be restored as near to the original condition subsequent to plugging.

B) The following requirements will be mandatory for plugging monitoring wells that have **less than 20 feet of grout (including bentonite plug)**:

1) The well head, concrete pad and protective cover (if above grade completion) must be removed.

2) Unless otherwise specified in the Site Specific (SSI) in Exhibit 1, the well must be drilled out to a minimum of twenty (20) feet or total depth, whichever is less. Over drilling must be performed using an augur with a minimum diameter equal to the original diameter of the soil boring.

3) The casing (if still present) must be removed and the boring filled with an approved plugging material to a level of three (3) feet below ground surface. The remaining excavation may then be backfilled with native soils.

4) The property will be restored as near to the original condition subsequent to plugging.

ATTACHMENT C

LABORATORY METHODS

APPROVED ANALYTICAL METHODS FOR ORGANIC COMPOUNDS

ANALYTE	SOLID AND HAZARDOUS WASTE METHODS		WATER METHODS	
	No.	PARAMETER	No.	PARAMETER
Benzene	8020*	Aromatic Volatile Organics	502.2	Volatile Org. Cmp., Purgeable Org. Cmp.
	8021*	Halogenated and Aromatic Volatiles	503.1	Volatile Aromatic & Unsat. Organic Cmp.
	8240	Volatiles	524.1	Purgeable Organic Compounds
	8260	Volatiles	524.2	Purgeable Organic Compounds
			602	Purgeable Aromatics
			624	Purgeables
			1624	Volatile Organic Compounds
BTEX	8020*	Aromatic Volatile Organics	502.2	Volatile Org. Cmp., Purgeable Org. Cmp.
	8021*	Halogenated and Aromatic Volatiles	503.1	Volatile Aromatic & Unsat. Organic Cmp.
	8240	Volatiles	524.1	Purgeable Organic Compounds
	8260	Volatiles	524	Purgeable Organic Compounds
1,2-DCA	8010*	Halogenated Volatile Organics	502.1	Volatile Halogenated Organic Compounds
	8021*	Haloginated and Aromatic Volatiles	502.2	Volatile Org. Cmp., Purgeable Org. Cmp.
	8240	Volatiles	504.1	Microextraction and GC
	8260	Volatiles	524.1	Purgeable Organic Compounds
	8261	Vaccum Distillation in Combination	524.2	Purgeable Organic Compounds
		with GC/MS	601	Halogenated Volatile Organics
			624	Purgeables
			1624	Volatile Organic Compounds
Ethylbenzene	8020*	Aromatic Volatile Organics	502.2	Volatile Org. Cmp., Purgeable Org. Cmp.
	8021*	Haloginated and Aromatic Volatiles	503.1	Volatile Aromatic & Unsat. Organic Cmp.
	8240	Volatiles	524.1	Purgeable Organic Compounds
	8260	Volatiles	524.2	Purgeable Organic Compounds
			602	Purgeable Aromatics
			624	Purgeables
			1624	Volatile Organic Compounds
MtBE	8020*	Aromatic Volatile Organics	503.1	Volatile Aromatic & Unsat. Organic Cmp.
	8240*	Halogenated and Aromatic Volatiles		
	8260	Volatiles		
Naphthalene	8021*	Halogenated and Aromatic Volatiles	502.2	Volatile Org. Cmp., Purgeable Org. Cmp.
	8100	Polynuclear Aromatic Hydrocarbons	503.1	Volatile Aromatic & Unsat. Organic Cmp.
	8250	Semivolatile Organic Compounds	524.2	Purgeable Organic Compounds
	8270	Semivolatile Organic Compounds	550	Polycyclic Aromatic Hydrocarbons
	8310	Polynuclear Aromatic Hydrocarbons	550.1	Polycyclic Aromatic Hydrocarbons
	8260	Volatiles	610	Polynuclear Aromatic Hydrocarbons
			625	Base/Neutrals & Acids
			1625	Semivolatile Organic Compounds
Toluene	8020*	Aromatic Volatile Organics	502.2	Volatile Org. Cmp., Purgeable Org. Cmp.
	8021*	Halogenated and Aromatic Volatiles	503.1	Volatile Aromatic & Unsat. Organic Cmp.
	8240	Volatiles	524.1	Purgeable Organic Compounds
	8260	Volatiles	524.2	Purgeable Organic Compounds
			602	Purgeable Aromatics
			624	Purgeables
			1624	Volatile Organic Compounds

APPROVED ANALYTICAL METHODS FOR ORGANIC COMPOUNDS

ANALYTE	SOLID AND HAZARDOUS WASTE METHODS		WATER METHODS	
	No.	PARAMETER	No.	PARAMETER
Xylene	8020*	Aromatic Volatile Organics	502.2	Volatile Org. Cmp., Purgeable Org. Cmp.
	8021*	Halogenated and Aromatic Volatiles	503.1	Volatile Aromatic & Unsat. Organic Cmp.
	8240	Volatiles	524.1	Purgeable Organic Compounds
	8260	Volatiles	524.2	Purgeable Organic Compounds
EDB	8260	Volatiles	504.1	Microextraction and GC
	8011	Micorextraction and GC with Electron Capture	555.1	Liquid-Liquid Extraction and GC with Electron Capture
	8021B	GC using Photoionization and/or Electrolytic Conductivity Detectors		
Polynuclear Aromatic Hydrocarbons	8310	Polynuclear Aromatic Hydrocarbons	610	Polynuclear Aromatic Hydrocarbons (High performance Liquid Chromatography)
	8270C	Semi Organic Compounds by GC/MS, Cap Column		
Lead	7420	AA Direct Aspiration	239.2	Atomic Absorption Spectrometry (Graphite Furnace)
	7421	Atomic Absorption, Furnace Technique	200.8	Inductively Coupled Plasma Mass Spectrometry
			200.9	Atomic Absorption Spectrometry-Stabalized Temperature (Graphite Furnace) Method

* Water samples must be prepared using method 5030 (purge & trap extraction) if this test method is used.

Air Sample Analysis:

40 CFR Ch. 1 (7-1-91 Edition) Part 60, Appendix A, Method 18 (Flexable Bag Procedure)

rev 8, 1/05

ATTACHMENT D

KDHE WELL TAGGING PROCEDURES

ADDITIONAL INSTRUCTIONS FOR THE SITE IDENTIFICATION FORM

A State of Kansas Site I.D. record must be developed for all wells installed or/and monitored at Leaking Underground/Aboveground St private or public wells). The Site I.D. record is used to uniquely identify individual sampling points at LUST/LAST (and other) projects f computerized data systems. To establish a Site I.D. record, a Site I.D. form must be completed and the identically numbered tag must the form is returned to KDHE. Specific instructions (and exceptions) for completing the Site I.D. form and affixing the tag are describe

Part 1: state of Kansas Site I.D. Form

The instructions for completing the Site I.D. form are provided in detail on the reverse side of the form itself. Please note the following

A) Each Site I.D. form is uniquely numbered and has an identically numbered Site I.D. tag attached to it. For this reason, AND FORMS.

B) A separate Site I.D. form must be completed for each monitoring well installed and each private or public well sampled been tagged (and the tag is readable), do not tag the well again. Also see the "Caution" statement in the tag installatio wells.

C) No two Site I.D. numbers are the same. EACH MONITORING WELL INSTALLED MUST HAVE A UNIQUE SITE I.D. GROUPS OF WELLS MAY BE ASSIGNED THE SAME PROJECT CODE.

D) Please write the Site I.D. number in the upper margin near the right edge of the Water Well Record form (form WWC-5 at a LUST/LAST site.

Specific directions for topics not addressed by the instructions on the Site I.D. form are listed below (refer to the attached example Site monitoring well installed at a hypothetical LUST site.

Item c: The person/company/entity responsible for plugging the well being tagged, should be placed in this field (if no this will often be the State of Kansas, but not always). It is possible that the property/facility owner name of ea project site could be the same, or it could be different for all (or only some) of the wells.

Item i: This item should be completed after conducting a legal survey as specified in the original scope of work. All lo monitoring well should be obtained from the survey data (e.g. legal description, distance from the southeast co

Item k: After entering the name of the individual who conducted the survey, enter "NA" "NA" in item kk. In item "y" (Co company the registered land surveyor works for (see attached example Site I.D. form).

Item p: Enter the name of the individual who completed the Site I.D. form in item (p), enter "NA" "NA" in item (pp). In i name of the company the person in item (p) is working for (see attached example Site I.D. form).

Item r: The program code for Trust Fund sites is "ET", for LUST sites, it is "EL". The letters must be circled as shown That information will be provided in the scope of work for the site.

Item s: Enter the KDHE project code assigned to the site (that information will be provided in the scope of work for the

The remainder of the Site I.D. form must be accurately completed by the contractor's project manager, geologist, or engineer primarily investigation. The form must be completed according to the instructions herein, and those on the back of the Site I.D. form, and as de Site I.D. form. Failure to submit the forms or submitting inaccurate data could restrict or delay reimbursement for work completed. If th regarding completion of the form, the KDHE contact person for questions on well tagging or completing the Site I.D. forms is Mr. Loyd forms must be completed and submitted to the address below within two weeks after tagging the well. Copies of the Site I.D. forms mu appendix of the final report. Any unused Site I.D. forms must be returned to the address below.

Kansas Department of Health & Environment
Geographic Data Services
ATTN: A.J. Thomas
1000 SW Jackson Street, Suite 010
Topeka, Kansas 66612

Part II: Affixing the Tag to a Well

The uniquely numbered tag to be permanently affixed to a well will be found attached to the corresponding Si
INTERCHANGE TAGS AND FORMS.

The tag is made of aluminum and measures approximately 2.5 X 0.75 X 0.02 inches. It can be easily moldec
surface to which it will be affixed. The method of installing the tag will depend on how a well head was comp
provided, however, installation hardware must be supplied by the contractor. Acceptable methods of tag inst
follows:

1) Above-grade well head completion: For monitoring wells that have casing terminating above gr
or PVC well head protector (standard monitoring well design), the Site I.D. tag is to be installed
protective cover approximately 3.0 inches below the hasp used in locking the protective cover c
secured to the protective cover by means of two one-way metal screws or pop-rivets. Do not us
the tag to the protective cover.

2) Flush-mounted monitoring well heads: Since flush-mount manholes vary in design, there is not
method for affixing the well tag, but, the tag must be installed inside the manhole in an area anc
tag readily visible and accessible. The tag may be affixed to the inside of the manhole cover or
means to the concrete inside the manhole. Do not use adhesives to affix the tag.

3) Private or public wells: The method for affixing a tag to a private or public water well must be d
the specific well head design, which will vary. Keep in mind the tag must remain visible and acc
permanently affixed to the well. Common methods of affixing tags to these types of wells are a
concrete pad at the base of the well, attaching the tag to the well house, or wiring the tag to the
Remember to obtain permission prior to sampling or tagging private or public wells.

Notes on tag installation:

CAUTION! State regulations prohibit perforation of a well casing. See K.A.R. 28-30-6(e) as stated below.

K.A.R. 28-30-6(e) provides in part: "...No opening shall be made through the well casing except for the instal
adapter so designed and fabricated to prevent soil, subsurface and surface water from entering the well."

A. Remember, the tag must be visible and must remain permanently affixed to the well sampled as
investigation. Copies of photographs depicting acceptable methods of tag installation have bee

B. When affixing a tag to any well that does not have a protective casing installed, state regulation
holes to be drilled into an existing well casing. An alternative method for affixing the tag must b

C. Prior to sampling or tagging any private or public water supply well, specific permission must be
appropriate authority.

D. If there are any questions on installing the tag or completing the Site I.D. form, contact Ms. A.J.
8078.

Amended Report ☐

State Of Kansas

Site I.D. Form

a. County: **b. Site I.D. number:**

c. Owner Name:

d. Owner Address: **City** **State** **Zip Code**

e. This site is located at (66 Characters max.)

f. Encoded Owner Name: ☐☐☐☐☐☐☐☐☐☐☐ **g. Well (site) Number** ☐☐☐

h. Encoding Scheme (Circle only one number):

1. **If city owned**, enter the first eleven letters of the city name (leave a blank space between words if more than one word is used).
2. **If County owned**, enter the first eleven letters of the county name ("Pottawatomi", for Pottawatomie) or abbreviate when it is necessary to show the type of site ("AL San Lndf", for Allen County Sanitary Landfill).
3. **If business owned**, print the first eleven letters of the business name (include RWDs, e.g., SN RWD1, for Shawnee Co. RWD 1).
4. **If owned by an individual**, print the first eight letters of the last name, a comma, and the first two letters of the first name.
5. **If none of the above apply**, encode the owner name in the most meaningful manner possible, and explain the procedure in item y.

i. This well (site) is in Sec. ____ , Twn. ____ , Rng. ____ (circle one) E / W. From the (circle one) NE / SW / SE / NW corner of this section, this site is _____ ft (circle one) N / S and _____ ft (circle one) E / W , and is in the ____ 1/4 of the ____ 1/4 of the ____ 1/4 of the ____ 1/4.

J. Measurement Method Used (circle only one number):

1. Legal Survey 2. Absolute Survey 3. GPS Survey 4. Technical Survey 5. Compass & Chain
6. Hand Wheel 7. USGS 7.5 Topomap 8. County Road Map 9. Other: _____

k. Measured By; _____ , _____ **of (kk.)** _____ **(Agency)** _____ **(Bureau)**
last name first init. abbreviate abbreviate

l. The tag is attached to the **, (ll.) using**

m. Water Source (Circle only one number):

1. Well 2. Spring 3. Pit 4. Lake / Pond 5. Stream / River
6. Ditch / Canal 7. Storm Runoff 8. Treated Water (Distribution System) 9. Waste Water

n. Use(s) of Water (Circle all that apply):

1. Domestic 2. Irrigation 3. Feedlot 4. Industrial 5. Public Water Supply
6. Oilfield Water Supply 7. Lawn and Garden Only 8. Air Conditioning 9. Dewatering 10. Monitoring Well Only
11. Injection Well 12. Artificial Recharge 13. Recreation 14. Other (Specify): _____

o. Type of Casing (Circle only one number):

1. Steel 2. PVC 3. RMP (SR) 4. ABS 5. Wrought Iron
6. Asbestos Cement 7. Fiberglass 8. Concrete Tile 9. Other (Specify, or print "UNK" if unknown): _____

p. Form Completed By: _____ , _____ **of (pp.)** _____ **(Agency)** _____ **(Bureau)**
last name first init. abbreviate abbreviate

q. Your Work Phone Number: (_____) - _____ - _____ **qq. Date:** _____ - _____ - _____
Area Code Prefix Number MM DD YYYY

r. Program Code:

EP ER EE EU EL ET EJ SC SG SN SW SE SP FK LM ES AR KC
PU PC PT PE PD PV PI WI WE PP HL HD HF HS WC RP GS US

s. Project Code: ☐☐☐☐☐☐☐☐☐☐☐☐☐☐☐☐☐☐

t. Optional "Well Number Codes": **Consultant Code** ___ , and / or (**S**)hallow, (**I**)ntermediate, or (**D**)eep ___ .

u. Well Depth (TOC to TD):_____.____ ft. **v. TOC is** ____.____ ft above / below ground elevation. **w. TOC Elevation**_____

x. DWR File Number: _____ **xx. Is this a replacement well?** (circle one) YES / NO

y. Comments: _____

REV NOV 98

AFTER YOU HAVE COMPLETED THIS FORM, PHOTO-COPY IT AND KEEP THE COPY FOR YOUR FILES. SEND THE ORIGINAL TO THE KANSAS DEPARTMENT OF HEALTH & ENVIRONMENT, OFFICE of INFORMATION SYSTEMS, SYSTEMS MANAGEMENT SECTION at Forbes Field (Bldg 740), Topeka, Ks. 66620.

Complete this form legibly using a soft lead pencil. PLEASE DO NOT USE INK (a typewriter may be used).NOTE : ALL OF THIS FORM SHOULD BE COMPLETED IF THE INFORMATION CAN BE REASONABLY ACQUIRED.

Check the amended report box only when amending an existing report.

a. Write the full name of the county this site is in, do not abbreviate or use numbers.

b. Copy the Site I.D. number from the tag when the Amended Report box is marked (first time applications will always have the Site I.D. number pre-printed on the form).

c. Write the name of the entity that owns this site (example: City of Attica). If this site (a river for example) doesn't have an owner, then use the entity name (example: Walnut River). 32 characters maximum may be used.

d. Write the owner address.

e. Write the street address where this well (site) is located. If the street address is unknown (or if the well/site is in a rural area), write the name of the nearest marked intersection and it's distance and direction from the well, then write the name of the nearest town. Do notwrite more than 60 characters.

f. Code the owner name using one of the five encoding schemes listed in Item h.

g. Write a three digit numerical well (site) number (use leading zeros when necessary). Do not use alpha characters (letters).

h. Circle the number that represents the coding scheme used in Item f.

i. Write the section, township, range, and circle either "E", or "W". Circle the section corner that measurements were made from, then write the number of feet (and circle the appropriate direction) for both required footage measurements. Write the 1/4 section descriptions(they can be calculated after measuring the section perimeter on a Topo Map). NOTE : COMPLETE THIS ITEM EVEN IF A GPS SURVEY IS PERFORMED.

j. Circle the number that represents the method most accurately describing how you calculated the footages given above.

1.Legal Survey = a survey performed and certified by a licensed surveyor.

2.Absolute Survey = the same as a legal survey except that an unlicensed person performed the survey.

3.GPS Survey = a survey made using satellite receivers to calculate latitude and longitude which will be added to this record later.

4.Technical Survey = measurements made using the same instruments that a legal survey would use, but utilizing perceived section lines instead of actually locating the section corner pin.

5.Compass and Chain = measurements made using these tools and perceived section lines.

6.Hand Wheel = see compass and chain.

7.USGS 7.5' Topo Map = Plot site on a 7.5' quadrangle map, measure the map scale, and convert to footage.

8.County Road Map = Plot site on a county road map, measure the map scale, and convert to footage.

9.Other = specify and explain any other method used (use comment section if more space is needed).

k. Write the last name, then the first initial, of the person who performed the survey.

kk. Write the agency name (abbreviated to 2 letters), then the bureau name (abbreviated to 4 or fewer letters), for the employer of the personindicated in Item k.NOTE : IF THIS SURVEY WAS PERFORMED BY A LICENSED WELL DRILLER OR HIS EMPLOYEE, LEAVE THE BUREAU NAME BLANK AND PUT THE WELL DRILLER'S LICENSE NUMBER IN THE AGENCY NAME FIELD.

l. Briefly describe where the tag is located, and (ll.) the fasteners used to attach it there.

m. Circle the number (only one number) that represents the best description of the source of this water.

n. Circle the number(s) that represent(s) the best general description(s) of the use of the water from this site.

o. Circle the number (only one number) that represents the best description of the type of casing that is in this well (if "Well" is the source).If the casing type is unknown, circle option number 9 and write "UNK" on the blank line.

p. Write the last name, then the first initial of the person who completed the blanks on this form.

pp. Follow the instructions given for Item kk.

q. Write the work phone number for the person who completed this form.

qq. Write the date the well (site) was tagged (use numbers, e.g. 06-09-91).

r. Circle the code that represents the program for whom you are visiting this well (site). NOTE : Contact your database administrator if a needed code is not on this list, DO NOT INVENT DIFFERENT CODES. The program codes are as follows :

Environmental Remediation (BER)
Science & Support (OSS)
Bureau of Water (BOW)
Waste Management (BWM)
EP=Pre-Remedial Projects
SC=Stream Monitoring Network
PU=Public Water Supply (PWS)
HL=Sanitary Landfills
ER=Remediation Sites
SG=Groundwater Network
PC=Chlorinated PWS
HD=Hazardous Waste Sites EE=Environment
Emergency (spills)
SN=Nonpoint Pollution

PT=PWS Test Sources
HF=Furley / Nies Project
EU="UST" Sites
SW=Wasteload Allocation
PE=PWS Point of Entry
HS=Special Projects
EL="LUST" Sites
SE=Effluent Monitoring
PD=PWS Distribution Systems
ET=Trust Fund Sites
SP=Special Projects
PV=Private Water Supply Source
Air and Radiation (BAR)
EJ=Joint or Special Projects

FK=Pollution (fish kill, spill, etc.)
PI=Underground Brine Injection
WC=Wolf Creek Project
LM=Lake Monitoring Network
WI=Waste Influent
RP=Special Projects
ES=Sanitarian Program
WE=Waste Effluent
Other Agencies Programs
PP=Pre-Treatment Program

AR=DWR Appropriation Rights
KC=Ks. Corporation Commission
GS=Ks. Geological Survey
US=U.S. Geological Surve

s. Write the existing program specific project code (eg. an alias) for this well (site) if known. If an alias has not been assigned to this site,and one should be developed, write the proposed alias. Information about "How to build the alias" should be centrally coordinated, so consult your section representative for more information on "what to enter", BEFORE MAKING AN ENTRY. These codes are for program staff use only and should not be used outside of the program area for which they are designed.

t. THIS FIELD IS OPTIONAL. Use it to provide the well number with supplemental significance. Example : Monitoring well number 001 can be coded (using this field) to show: it was installed by consultant "X" (write x in the first blank), and, it is a deep well (write D in thelast blank). The computer system will show that this is monitoring well number X001D.

u. THIS FIELD IS OPTIONAL. Write the well depth (can be reported to one 1/100 of a foot).

v. THIS FIELD IS OPTIONAL. Write the number of feet (can be reported to one 1/100 of a foot) that the casing extends above or below (circle one) ground level.

w. THIS FIELD IS OPTIONAL. Write the elevation to the top of the casing (can be reported to one 1/100 of a foot).

x. Write the Board of Agriculture, Division Of Water Resources, Application number, or, enter "UNK" if unknown, or "NONE" if you know that a DWR appropriation number does not exist.

xx. Circle either yes, or no, to indicate if this is a replacement well.

y. Give a general description of this site and its location. Describe any unique aspects of this site (such as the structure of the well house). Site descriptive statements that might enable another person to more easily locate or recognize this site, should be included in this field.

DO NOT INCLUDE SAMPLE ANALYSIS INFORMATION IN THIS FIELD! The laboratories and other departments in KDHE do notreceive a copy of this form.

ATTACHMENT E

FIELD WORK PLAN WORKSHEET

PETROLEUM STORAGE TANK RELEASE TRUST FUND
FIELD WORKPLAN WORKSHEET

Site Name: _____ KDHE Project Code: _____

Vendor: _____ Vendor Contact: _____

Instructions: This form ust be completed by providing the information requested below. Do not include any attachments with this worksheet other than those described herein.

I Site Information

Site Address: _____ (Street) _____ (City) Kansas _____ (County)

Legal Description: ____ 1/4 ____ 1/4 ____ 1/4 ____ 1/4 Section ____ Township ____ Range ____

II Investigation Information

Check the general methodologies to be used: ____ Groundwater survey ____ Soil Borings ____ Monitoring Wells

List the requested information where indicated:

1) Groundwater Survey:
Sample Extraction Equipment _____

Sample Analysis Equipment _____

Compounds for Analysis with Detection Limits (DL)

Benzene	DL= ____ ppb	Other:	_____	DL=	____ ppb
Toluene	DL= ____ ppb		_____	DL=	____ ppb
Ethylbenzene	DL= ____ ppb		_____	DL=	____ ppb
Xylenes	DL= ____ ppb		_____	DL=	____ ppb

2) Drilling: (list primary equipment under column "A", under column "B", list drilling equipment to be used if auger refusal is encountered)

		A	B
Drill Rig	Brand/Model		
	Tourque Rating		
Drill String	Type (Augers, etc)		
	O.D. / I.D.		
Borehole Size			
Sample Collection Equip			
Drilling Sample Frequency			

3) Field Screening Instrument

Device (Brand / Type / Spec) _____

Calibration Standard _____

Calibration Frequency _____

4) Monitoring Well Development

Method (bailer, pump, etc) _____

Minimum well volume to be with drawn (Drilling Scenario "A") _____

Minimum well volume to be with drawn (Drilling Scenario "B") _____

continued on back

5) Hydrogeologic Testing Methods: (list methods and number of tests)

Unsaturated Zone _____ Number of tests _____

_____ Number of tests _____

_____ Number of tests _____

_____ Number of tests _____

Saturated Zone _____ Number of tests _____

6) Laboratory Analytical:

Soil Samples Collection Equipment _____

Analytical Methods _____

Water Samples Collection Equipment _____

Analytical Methods _____

Laboratory to Conduct Analysis _____

7) Waste Handling Procedures - Briefly describe how soil and water waste will be handled, treated, or disposed of:

Soil _____

Water _____

8) Decontamination - Briefly describe decontamination equipment, methods and procedures to be employed:

_____

_____

_____

III Site Maps, Photos and Site Conceptual Exposure Model

Note: All maps and photos must include a scale, north arrow and legend.

1) Attach a copy of a U.S.G.S. 7.5 minute quadrangle, scale 1:24,000, which depicts the general site location and the 1 mile radius area surrounding the site. The site must be highlighted or outlined for delineation.

2) Prepare and submit with this worksheet three site maps in accordance with and containing the following information:

A One site map will be a detailed site map with a scale such that 1 inch is less than or equal to 50 feet for smaller sites and 1 inch is less than or equal to 100 feet for larger sites.

B The second site map will depict the site including a minimum 350' radius from the release with an approximate scale of 1" = 100'. The third site map will depict the site the site including a minimum 500' radius from the release with an approximate scale of 1" = 125'. Both maps will include the general use of surrounding properties identified; i.e., residential, industrial business (indicate what type - fast food, service stations, etc.). List owners names relative to off-site properties.

C Site property boundaries, buildings or other fixed objects, and street names.

D Tanks, lines, and pump islands, currently or formerly located at the site.

E General locations and depths of all utilities on and adjacent to the site from visual survey of site.

F If a Geoprobe Survey is requested: Proposed probe locations for at least the "Groundwater Contamination" scope of work. Include existing wells within 350' from the source. All wells should be designated in accordance with previous reports if available.

G If a Geoprobe Survey is not requested: Proposed boring and monitoring well locations instead of proposed geoprobe points must be indicated.

H Accessible easements within the specified area.

I Arrow depicting groundwater flow direction.

3) Include the most recent aerial photograph available showing the site location and the specified area; the maximum scale of the aerial photograpgh shall be 1 inch = 250 feet. The aerial photo must be an original print, a high quality color copy of an original print, or a blueline. Prominent features (buildings, storage tanks, pump islands, existing wells, etc) should be denoted on the aerial photograph.

4) Include current photographs as stated in 4.2.1 under Section 4.0, Deliverables in the LSA RFP.

IV Field Personnel / Health and Safety Plan

List below the consultant's personel and any subcontracting firms that will be involved in the investigation. Indicate each individual's name and position title (attach an additional sheet if necessary). If resumes documenting education, experience, and safety training certification have not been provided with the original bid package for all those listed, submit this information with this worksheet.

Name	Position Title	Name	Position Title

Indicate whether a Health and Safety Plan has been prepared for this investigation: Yes _____ No _____

ATTACHMENT F

TIME SHEETS

KDHE TRUST FUND TIME SHEET LOG
FOR FIELD ACTIVITIES

SITE NAME: _____
SITE ADDRESS: _____
KDHE SITE CODE: _____
CONSULTANT: _____
PROJECT MANAGER: _____

NOTE: This form is to be maintained during all field activities. All Workers must sign, date and list the time they arrive and depart from the site. This must be done each time a worker arrives or departs the site. A COPY OF THIS FORM MUST ACCOMPANY ALL REQUESTS FOR REIMBURSEMENT.

DATE	PRINT WORKERS NAME	WORKER'S SIGNATURE	JOB TITLE	TIME STARTED	TIME FINISHED	TOTAL TIME FOR DAY

I certify that the names and signatures above are those of the actual people who worked on the referenced site during the dates and times stated.

Signed: _____
Consultant Project Manager

Date: _____

I certify that the information on this sheet is true and accurate to the best of my knowledge.

Signed: _____
Owner/Operator or Authorized Representative

Date: _____

KDHE TRUST FUND TIME SHEET LOG
FOR OFFICE ACTIVITIES

SITE NAME: _____
SITE ADDRESS: _____
KDHE SITE CODE: _____
CONSULTANT: _____
PROJECT MANAGER: _____

NOTE: This form is to be maintained during all office activities. All Workers must sign, date and list the time they work on the site project. A separate from must be maintained for each site project. A COPY OF THIS FORM MUST ACCOMPANY ALL REQUESTS FOR REIMBURSEMENT.

DATE	PRINT WORKERS NAME	WORKER'S SIGNATURE	JOB TITLE	TIME STARTED	TIME FINISHED	TOTAL TIME FOR DAY

I certify that the names and signatures above are those of the actual people who worked on the referenced site during the dates and times stated.

Signed: _____
Consultant Project Manager

Date: _____

ATTACHMENT G

OWNER/OPERATOR STANDARD CONTRACT

AGREEMENT

This **AGREEMENT** entered into between _____

_____(OWNER/OPERATOR) hereinafter referred to as the O/O;

and _____ (VENDOR),

hereinafter referred to as the Vendor.

WHEREAS, the _____ (O/O) is in need of Underground Storage Tank consulting and testing services at

_____ and

WHEREAS, the O/O has requested bids from qualified firms to provide said services, and

WHEREAS, the Vendor is qualified to provide the required services.

1. The Vendor shall perform all services called for under Request for Proposal in accordance with the specifications called for in said RFP. A copy of said RFP is attached hereto and incorporated herein.

2. The O/O shall compensate the Vendor for its services under the terms and conditions of said RFP in the amount of $_____, with payment to be made upon successful completion of the Project.

3. The provisions found in the contractual Provisions attached hereto and executed by the parties to the AGREEMENT, are hereby incorporated in this AGREEMENT and made a part hereof.

IN WITNESS WHEREOF, we have hereunto set our hands below on the date specified.

_____	_____
Date	Owner/Operator
_____	_____
Date	Vendor

CONTRACTUAL PROVISIONS

Important: This form contain mandatory contract provisions and must be attached to or incorporated in all copies of any contractual agreement. If it is attached to the Vendors standard contract form, then that form must be altered to contain the following:

"The provisions found in the Contractual Provisions, form # O/O 101, 7/92, which is attached hereto and executed by the parties to this agreement, are hereby incorporated in this contract and made a part hereof."

The parties agree that the following provisions are hereby incorporated into the contract to which it is attached and made a part thereof.

4. TERMS HEREIN CONTROLLING PROVISIONS

It is expressly agreed that the terms of each and every provision in this attachment shall prevail and control over the terms of any other conflicting provision in any other document relating to and a part of the contract in which this attachment is incorporated.

5. AGREEMENT WITH KANSAS LAW

All contractual agreements shall be subject to, governed by, and construed to according to the laws of the State of Kansas.

6. ANTI-DISCRIMINATION CLAUSE

The Vendor should comply with the Kansas Act Against Discrimination (K.S.A. 44-1001 et seq.) and the Kansas Age Discrimination in Employment Act (K.S.A. 44-1111 et seq.) and to not discriminate against any person who performs work hereunder, because of race, religion, color, sex, physical handicap unrelated to such person's ability to engage in this work, national origin or ancestry, or age.

7. ACCEPTANCE OF CONTRACT

This contract shall not be considered accepted, approved or otherwise effective until the required bonds and insurance certificates are received by the O/O.

8. REPRESENTATIVE'S AUTHORITY TO CONTRACT

By signing this document, the representative of the Vendor hereby represents that he/she is duly authorized by the Vendor to execute this document on behalf of the Vendor and that the Vendor agrees to be bound by the provisions thereof.

9. RESPONSIBILITY FOR TAXES

The Owner/Operator will not be responsible for, nor indemnify a Vendor for, any federal, state or local taxes which may be imposed or levied upon the subject matter of this contract.

_____	_____
Date	Owner/Operator
_____	_____
Date	Vendor

ATTACHMENT H

BOREHOLE STORAGE VOLUME CALCULATIONS

PROCEDURE FOR CALCULATING WELL BORE STORAGE VOLUME

The following well specifications are needed to accurately determine the Well Bore Storage Volume (WBSV) and ultimately, the volume of water to be purged from the well during well development.

Total Depth (TD) of well: _____

Depth to Water (DTW) in the well: _____

Nominal Diameter of Casing/Screen: _____

Diameter of Borehole: _____

Depth to Top of Filter Pack: _____

Pore Volume of Filter Pack: _____
(assume a porosity of 25% if unknown)

Calculate the WBSV using the following mathematical formula:

$$\text{WBSV (gallons)} = \pi(r_1)^2h_1 + 0.25\,(\pi(r_2)^2h_2 - \pi(r_1)^2h_2)$$

Where: π (pi) = 3.1416
r_1 = radius of well casing/screen
h_1 = TD minus DTW
r_2 = radius of borehole
h_2 = TD minus Depth to Top of Filter Pack
0.25 = assumed porosity of Filter Pack
r_1, h_1, r_2, h_2 units = inches

Example:

TD = 50 feet
DTW = 30 feet
Nominal Diameter of Casing/Screen = 2 inches
Diameter of Borehole = 8 inches
Depth to Top of Filter Pack = 35 feet
Porosity (assumed) = 25%

$$\text{WBSV (gallons)} = \pi(r_1)^2h_1 + 0.25\,(\pi(r_2)^2h_2 - \pi(r_1)^2h_2)$$

$$\begin{aligned}
\text{WBSV} &= 3.1416\,(1'')^2(240'') + .025[3.1416(4'')^2(180'') - 3.1416(1'')^2(180'')] \\
&= 753.984 + .025[9047.808 - 565.488] \\
&= 753.984 + .025[8482.32] \\
&= 2874.564\ \text{in}^3\ /\ 1728\ \text{in}^3/\text{ft}^3 \\
&= 1.644\ \text{ft}^3 \times 7.4809\ \text{gallons/ft}^3 \\
&= 12.45\ \text{gallons}
\end{aligned}$$

Where: $\text{ft}^3 = 1728\ \text{in}^3$ and $\text{ft}^3 = 7.4809$ gallons

VOLUME OF WATER IN CASING OR HOLE

Diameter of Casing or Hole (in)	Gallons per foot of Depth	Cubic Feet per Foot of Depth	Liters per Meter of Depth	Cubic Meters per Meter of Depth
1	0.041	0.006	0.509	0.509×10^{-3}
1 1/2	0.092	0.012	1.142	1.142×10^{-3}
2	0.163	0.022	2.024	2.024×10^{-3}
2 1/2	0.255	0.034	3.167	3.167×10^{-3}
3	0.367	0.049	4.558	4.558×10^{-3}
3 1/2	0.500	0.067	6.209	6.209×10^{-3}
4	0.653	0.087	8.110	8.110×10^{-3}
4 1/2	0.083	0.110	10.26	10.26×10^{-3}
5	1.020	0.136	12.67	12.67×10^{-3}
5 1/2	1.234	0.165	15.33	15.33×10^{-3}
6	1.469	0.196	18.24	18.24×10^{-3}
7	2.000	0.267	24.84	24.84×10^{-3}
8	2.611	0.349	32.43	32.43×10^{-3}
9	3.305	0.442	41.04	41.04×10^{-3}
10	4.080	0.545	50.67	50.67×10^{-3}
11	4.937	0.660	61.31	61.31×10^{-3}
12	5.875	0.785	72.96	72.96×10^{-3}
14	8.000	1.069	99.35	99.35×10^{-3}
16	10.440	1.396	129.65	129.65×10^{-3}
18	13.220	1.767	164.18	164.18×10^{-3}
20	16.320	2.182	202.68	202.68×10^{-3}
22	19.750	2.640	245.28	245.28×10^{-3}
24	23.500	3.142	291.85	291.85×10^{-3}
26	27.580	3.687	342.52	342.52×10^{-3}
28	32.000	4.276	397.41	397.41×10^{-3}
30	36.720	4.909	456.02	456.02×10^{-3}
32	41.780	5.585	518.87	518.87×10^{-3}
34	47.160	6.305	585.68	585.68×10^{-3}
36	52.880	7.069	656.72	656.72×10^{-3}

1 Gallon = 3.785 Liters
1 Meter = 3.281 Feet
1 Gallon Water Weighs 8.33 lbs. = 3.785 Kilograms
1 Liter Water Weighs 1 Kilogram = 2.205 lbs.
1 Gallon per foot of depth = 12.419 liters per foot of depth
1 Gallon per meter of depth = 12.419×10^{-3} cubic meters per meter of depth

ATTACHMENT I

VENDOR FILE RESUMES

Attachment I

Geologist Vendor File Resume
KDHE - BER - Storage Tank Section

Applicant:_____for: Field Geologist_____ Project Geologist_____

Employers Name:_____Supervisors Name:_____

Application Type: L.S.A. only_____ L.S.A, SSA/RDP, RDP & SRP_____

Education:

College and/or University(s) attended:_____

_____

Degree(s):_____

_____

Semester Hrs. of Geologic Course Work:_____

Attachments Required:

College Transcript_____ O.S.H.A.(Hazmat) 40 hr. certificate_____ 8 hr. Refresher Certificate_____
Kansas Licensed Geologist Certificate_____ (Seal may be used - Requirement for Project Geologist)

Experience:

Bore Holes (Minimum requirement: Has overseen drilling activities and described and recorded the subsurface lithology during the drilling of 21 boreholes.)

Site Name:	Location:	No. of Boreholes:	Reference & Phone #'s

Soil Vapor Extraction/Air Sparge Tests - Not required for L.S.A. work. (Minimum requirement: Has performed a minimum of 3 successful SVE/AS tests with a duration of at least eight hours per test.)

Site Name:	Location:	Type of Test & Duration:	Reference & Phone #'s

Signature of Applicant:_____

revised 05/22/02 - dmc

ATTACHMENT J

FIELD WORK NOTIFICATION FORM

LSA FIELD WORK NOTIFICATION FORM - Mail, fax, or e-mail to the KDHE Project Manager and the KDHE District Office seven days prior to field work. District number follows the "U" or "A" in the project code. Circle the district office.

KDHE / BER / STORAGE TANK SECTION
1000 SW Jackson, Suite 410
Topeka, KS 66612
FAX: (785) 296-6190

KDHE SWDO #1
Attn.: Doug Doubek
302 W. McArtor Road
Dodge City, KS 67801
FAX: (620) 225-3731

KDHE SCDO #2
Attn.: Kyle Parker
130 South Market, 6th Floor
Wichita, KS 67202
FAX: (316) 337-6023

KDHE SEDO #3
Attn.: Bill Thornton
1500 West 7th
Chanute, KS 66720
FAX: (620) 431-1211

KDHE NEDO #4
Attn.: Dan Kellerman
800 West 24th Street
Lawrence, KS 66046
FAX: (785) 842-3537

KDHE NCDO #5
Attn.: Scott Lang
2501 Market Place, Suite D&E
Salina, KS 67401
FAX: (785) 827-1544

KDHE NWDO #6
Attn.: Bill Heimann
2301 E. 13th
Hays, KS 67601
FAX: (785) 625-4005

KDHE and KDHE DISTRICT OFFICE NOTIFICATION OF PLANNED FIELD ACTIVITIES

DATE: _____

KDHE Project Manager: _____

Site Name: _____ **Project Code:** _____

Address: _____ **City:** _____ **County:** _____

Consultant: _____
(company name, personnel expected)

Planned Date(s) of Activity(ies): _____
_____
_____
_____

COMMENTS:
_____
_____
_____
_____
_____
_____