PETROLEUM STORAGE TANK RELEASE TRUST FUND

SITE REMEDIATION PLAN

REQUEST FOR PROPOSAL

REVISION 10, 12/10

Kansas Department of Health and Environment
Bureau of Environmental Remediation
Storage Tank Section
1000 SW Jackson, Suite 410
Topeka, KS 66612-1367

TABLE OF CONTENTS

SECTION 1.0
PROPOSAL PROCESS INFORMATION 1

SECTION 2.0
CONTRACT INFORMATION 6

SECTION 3.0
STATEMENT OF WORK 10

SECTION 4.0
DELIVERABLES 24

SECTION 5.0
REIMBURSEMENT 28

SECTION 6.0
PROPOSAL DEFINITIONS 33

ATTACHMENTS
ATTACHMENT A . . . . . Owner/Operator Standard Contract
ATTACHMENT B . . . . . Certification of Completion
ATTACHMENT C . . . . . Off-Site Access Payment Schedule
ATTACHMENT D . . . . . KDHE Monitoring Well Design
ATTACHMENT E . . . . . KDHE Well Tagging Procedure
ATTACHMENT F . . . . . Remedial Implementation Schedule Worksheet
ATTACHMENT G . . . . . Soil Boring Plugging Criteria KAR 28-30-7(d)
ATTACHMENT H . . . . Domestic Well Contact Form
ATTACHMENT I . . . . . .QMR and Monthly Monitoring Report Examples
ATTACHMENT J . . . . . Final Remedial Report Outline
ATTACHMENT K . . . . . Monitoring/OMM Event Summary
ATTACHMENT L . . . . . Equipment Building Log-In Sheet
ATTACHMENT M . . . . . Operational Status Sheet
ATTACHMENT N . . . . . Electrical Hook-up & Supply
ATTACHMENT O . . . . . .Remedial Design/Implementation Site Remediation Plan
ATTACHMENT P . . . . . ReDIP Trailer & Equipment Specifications

EXHIBITS
EXHIBIT 1 . . . . . Site Specific Information
EXHIBIT 2 . . . . . Project Bid Proposal Sheets

SECTION 1.0-PROPOSAL PROCESS INFORMATION

1.1 PURPOSE- On behalf of the Owner/Operator (O/O), the Kansas Department of Health and Environment (KDHE) is soliciting bids from qualified Vendors to implement the enclosed Site Remediation Plan (SRP) to address site contamination associated with petroleum storage tanks.

1.2 OBJECTIVES

1.2.1 To provide information necessary for the preparation of competitive proposals by qualified Vendors.

1.2.2 To provide for a fair and objective evaluation of proposals.

1.2.3 To result in a contract between the O/O and Vendor to provide the services as described in SRP Sections 3.0 and 4.0 of this Request for Proposal (RFP).

1.3 DEFINITIONS

1.3.1 Field Geologist
This is the designated site representative for Vendor. This position works under the direct supervision of Vendor's designated Project Geologist. Minimum qualifications for this position are:

1) Has a Bachelor of Science Degree in Geology from an accredited four-year college or a related degree with a minimum of 30 semester hours of geologic course work.
2) Has overseen drilling activities and has described and recorded the subsurface lithology during the drilling of at least 21 boreholes.
3) Has performed a minimum of 3 successful soil vapor extraction /air sparge tests of at least eight hour duration per test.

1.3.2 KDHE Project Manager
This position is the KDHE staff geologist/environmental scientist designated to be the lead technical interface with Vendor.

1.3.3 Project Engineer
This is the person designated by Vendor to oversee the implementation of the SRP. This item shall be bid on an hourly basis. The minimum qualifications for this position are:

1) Currently a licensed Professional Engineer in the State of Kansas.

2) Has successfully implemented a minimum of five remedial systems that are similar to the type(s) specified in this SRP, and they are or have been successful in remediating the contamination.

The Project Engineer will be on-site during start-up.

1.3.4 Project Geologist

This position is either the designated site representative for Vendor, or the designated supervisor of Vendor's Field Geologist(s). This item shall be bid on an hourly basis. The Project Geologist for the project must be a Licensed Geologist in the State of Kansas and meet all minimum qualifications of a Field Geologist. This position is responsible for the preparation and certification of all geological information in reports and maps.

1.3.5 Owner/Operator

This term describes the person or corporation that entered into the Underground Fund Consent Agreement with the Kansas Department of Health and Environment. This party will contract with the successful Vendor to accomplish the remedial action.

1.3.6 Technician

Vendor representative qualified to perform certain on-site activities as specified in the SRP RFP. Minimum qualifications are:

1) OSHA 40-Hour Hazardous Material training and annual 8-Hour Refreshers
2) Knowledge of EPA/KDHE sampling protocol
3) Experience in collecting groundwater samples for laboratory analysis from at least 30 monitoring wells.

1.3.7 Vendor

This is any person (individual, partnership, association or corporation) who is seeking or is chosen to enter into a procurement contract with the O/O.

1.4 INQUIRIES

1.4.1 All inquires concerning this RFP must be submitted in writing to:

Petroleum Storage Tank Release Trust Fund
1000 SW Jackson, Suite 410
Topeka, KS 66612-1367
Attn: (Unit Name) Fax: (785) 296-6190

1.4.2 Answers to all written questions requiring clarification to this RFP will be distributed to all Prospective Vendors.

1.4.3 In all cases, no verbal communication will override written communications and only written communications are binding.

1.5 REVISIONS TO THE RFP- In the event it becomes necessary to revise any part of this RFP, revisions will be provided in writing to all Prospective Vendors.

1.6 SUBCONTRACTORS- If Vendor intends to subcontract any part of the work to be performed under this RFP, Vendor must include in its proposal a complete list of potential subcontractors and a description of the work to be subcontracted. Vendor is responsible for assuring subcontractors possess all local, state, and federal licenses and certifications required for the services they will provide.

1.7 SUBMISSION OF PROPOSAL- Two (2) sealed copies of the proposals must be received by the Petroleum Storage Tank Release Trust Fund no later than 3:00 p.m. on the date specified on the Project Bid Proposal Cover Sheet and the Project Bid Proposal Sheet(s). Proposals should be addressed to:

Petroleum Storage Tank Release Trust Fund
1000 SW Jackson, Suite 410
Topeka, KS 66612-1367
Attn: Storage Tank Section

The proposal must include costs for all tasks necessary to complete the specified scope of work in accordance with all requirements outlined in the RFP.

1.7.1 The outside of the envelope should be marked **"SEALED BID"** in bold lettering. The bid number(s) of the enclosed bid(s) must be displayed on the outside of the envelope. All bids sent in the same envelope must have the same bid deadline. Failure to properly mark the outside of the envelope may result in the bid(s) being disqualified.

1.7.2 Late proposals will not be opened. A letter notifying Vendor, and documentation that the proposal was received after the deadline, will be mailed to Vendor. The proposal will be stored in KDHE files for a period of one year beyond the closing date for the bid.

1.7.3 KDHE and/or the O/O will not pay for any information herein requested, nor are they liable for any costs incurred by Vendor to prepare or submit a proposal.

1.7.4 Proposals must be in duplicate and include the following completed documents in the order listed below:

1) Exhibit 2 Project Bid Summary Sheet (multiple site bids only).
2) Bid Proposal Cover Sheet with Vendor Information.
3) Exhibit 2 Project Bid Proposal Sheet(s). Vendor's name must appear at the top of each sheet in the designated place.
4) List of all proposed subcontractors, major equipment suppliers, and analytical laboratories.

For multiple site bids, keep the Bid Proposal Cover Sheet and Exhibit 2 Project Bid Proposal Sheet(s) together for each site.

Proposals must be neat and legible. Proposals that are not properly submitted and/or are not complete will be disqualified.

1.8 WITHDRAWAL OF BIDS- Vendor may withdraw a bid at any time prior to the scheduled closing time for receipt of proposals.

1.9 PROPOSAL OBLIGATIONS- The contents of the proposal and any clarification thereto submitted by the successful Vendor shall become part of the contractual obligation and will be incorporated by reference into the ensuing contract.

1.10 TERM OF PROPOSAL- All proposals shall be firm for a period of ninety (90) days after the proposal due date to allow time for evaluation of all proposals and to make an award.

1.11 DISPOSITION OF PROPOSALS- All proposals become the property of the State of Kansas upon receipt and will not be returned to Vendor. The State of Kansas shall have the right to use all ideas or adaptation of ideas contained in any proposal received in response to this RFP. Selection or rejection of the proposal will not affect this right.

1.12 NOTIFICATION OF APPROVED COSTS- After evaluation of the proposals all Vendors who submitted proposals will be notified in writing of the approved costs for the Project.

1.13 EVALUATION CRITERIA- Due to the variable nature of sites being remediated, bids will be reviewed to ensure that line item costs are equitably distributed across all required tasks. Prices must accurately reflect the actual cost to complete each segment of the project because additional scopes of work may be required. To avoid the potential problem of Vendors unfairly "loading" costs into certain categories to avoid cost proration, KDHE Trust Fund bid proposals will be evaluated on

a line item basis. KDHE will review individual line item rates with close scrutiny.

1.14 CONFLICT OR AMBIGUITIES- Vendors shall notify KDHE immediately if conflicts or ambiguities are found in the RFP. Failure to do so prior to the specified closing date may result in these items being resolved in a manner deemed to be in the State's best interest as judged by the KDHE Storage Tank staff.

1.15 PRE-CONTRACT SUBMITTALS- Prior to signing a contract, in order to be eligible for reimbursement, Vendor is required to submit each item requested in the order and format provided below. Certain items (*) will remain on file with KDHE and, once submitted, re-submittal will be necessary only when changes are made. Vendor must specifically state each item omitted from the submittal package and include an explanation.

1.15.1 A cover letter from Vendor itemizing submitted documentation

1.15.2 Copy of Insurance Certificate (specimen copy)

1.15.3 Standard Operating Procedures for the following technical Procedures

1.15.3.1 Drilling and decontamination procedures*

1.15.3.2 Procedures for field analysis of samples*

1.15.3.3 Laboratory sample collection and handling methods*

1.15.3.4 Well development procedures*

1.15.3.5 Waste handling and disposal methods*

1.15.3.6 All other technical procedures described herein or proposed by Vendor

1.15.4 Resumes with documentation and OSHA safety training certification of personnel proposed for the project (see Section 1.3 for detailed requirements)

1.15.5 Complete list of equipment*

1.15.6 Drill Rig Specifications

1.15.7 Quality Assurance and Quality Control (QA/QC) plan*

1.15.8 Field safety plan

1.15.9 Workers Compensation Log & Summary of Occupational Injuries & Illness (OSHA form G300A)

1.15.10 Completed W-9

SECTION 2.0-CONTRACT INFORMATION

2.1 PURPOSE- This section will outline the type of contract contemplated and will set forth contract clauses that need to be contained in any resultant contract.

2.2 CONTRACT DOCUMENT

2.2.1 The Contract between the O/O and Vendor shall consist of, at a minimum, the following:

1) This RFP and any amendments thereto,
2) Vendor's proposal submitted in response to the RFP, and
3) The Owner/Operator Standard Contract (see ATTACHMENT A) or equivalent.

2.2.2 For the purpose of contract uniformity, the Owner/Operator Standard Contract (ATTACHMENT A) in this RFP should be used.

2.2.3 In the event of any inconsistency or contradiction between this RFP and Vendor's proposal and/or contract form, the provisions of this RFP are controlling.

The O/O and Vendor are to enter into the contract within 14 days following the approval of the costs. A copy of the Owner/Operator Standard Contract or equivalent must be forwarded to KDHE as soon as it is signed by both parties.

2.3 RESPONSIBILITIES

2.3.1 The O/O is responsible for assuring that all work is conducted in accordance with KDHE specifications described in SECTION 3.0, 4.0 and 5.0.

2.3.2 The O/O and Vendor selected to perform this scope of work are responsible for maintaining the initial project costs approved by KDHE. Any change to the value of this contract will be in accordance with Vendor's proposed unit pricing and must be approved in writing by KDHE prior to Vendor commencing any additional work.

2.3.3 The O/O and Vendor are responsible for securing and complying with any and all federal, State of Kansas or local permits and regulations regarding the Scope of Work defined in this RFP.

2.3.4 Vendor is responsible for bidding the project as specified in the approved Remedial Design Plan (RDP). Any ambiguities, errors, or omissions in the design and/or narrative should be brought to the attention of the KDHE Project Manager immediately for clarification and amendments if necessary.

2.4 ERRORS IN PREPARATION- Vendor is responsible for any mathematical error or incorrect extension of any calculations in Vendor's price quotes. In case of discrepancies, Vendor unit cost will be multiplied by the units provided and the resultant unit price will be used in the evaluation. If there is an error in the proposal, it will be disqualified if there is a five percent or less difference between it and the next lowest qualified proposal. If the percent difference is greater than five percent, the corrected amount will be considered Vendor's submission and subject to approval.

2.5 CONTRACT AMENDMENTS- Modification, amendment or any extension to a contract resulting from this RFP must be in writing. The O/O must receive prior written approval from KDHE for the changes.

2.6 COMPLIANCE WITH LAW- Vendor agrees to comply with all applicable federal, state, and local laws, rules, regulations and ordinances; and all provisions required thereby to be included herein, are hereby incorporated by reference. Vendor agrees to indemnify and hold the O/O and KDHE harmless from any loss, damage, or liability resulting from the violation on the part of Vendor of such laws, rules, regulations, or ordinances.

2.7 SEVERABILITY- The invalidity in whole or part of any provision of the contract shall not void or affect the validity of any other provision.

2.8 ASSIGNMENT, TRANSFER, CONVEYANCE, SUBCONTRACT, AND DISPOSAL- Vendor shall not assign, transfer, convey, subcontract, or dispose of any contract resulting from this RFP, or its rights, title, interest, or power to execute such assignments to any other person, company, corporation, or entity without the written consent of the O/O and KDHE.

2.9 INSURANCE- Vendor shall maintain, at its expense during the term of the contract, the following insurance covering the services to be performed under this contract:

2.9.1 Workmen's compensation-statutory.

2.9.2 Employers liability insurance in the minimum amount of $500,000.00 per occurrence with a $1,000,000.00 aggregate.

2.9.3 Comprehensive general liability insurance of $1,000,000.00 per occurrence with a $1,000,000.00 aggregate.

2.9.4 Vehicle liability (property damage and bodily injury combined) $500,000.00 per occurrence.

2.9.5 Professional liability insurance of $1,000,000.00 per occurrence with a $1,000,000.00 aggregate.

2.9.6 The successful Vendor will provide the O/O, within twenty (20) working days of the contract signing, a certificate of insurance (Accord Form 25-S) naming the O/O as the certificate holder. The cancellation clause of the Accord Form will read as follows: "Should any of the above described policies be canceled before the expiration date thereof, the issuing company will endeavor to mail 10 days written notice to the certificate holder named to the left, but failure to mail such notice shall impose no obligation or liability of any kind upon the company, its agents or representatives." A copy of this document must be provided to KDHE within the same 20 working day time period.

2.10 INDEMNIFICATION- Neither the O/O nor KDHE shall be liable for any damage or compensation payable at law in respect or in consequence of any accident or injury to any worker or other person in the employment of Vendor or any subcontractor, save and except an accident or injury resulting from a willful negligent act or default of the O/O or KDHE.

Vendor shall indemnify and keep indemnified the O/O and KDHE against all such damages and compensation, save and except as aforesaid, and against all claims, proceedings, costs, charges, and expenses whatsoever in respect thereof or in relation thereto.

2.11 LIEN RELEASE- A lien release from all Subcontractors and Equipment Vendors must be provided as an attachment to the Final Remedial Report (FRR).

2.12 COMMUNICATION AND NOTICES- Any written notice to Vendor shall be deemed sufficient when deposited in the United States mail, postage prepaid, and addressed to Vendor at its address listed on the signature page of the contract or at such address as Vendor may have requested in writing or which is hand carried and presented to an authorized employee of Vendor at its address as listed on the signature page of the contract.

2.13 AUDIT TRAIL- Vendor shall retain documentation of all expenditures incurred in performing the activities required by the contract for purposes of maintaining an audit trail and shall produce such documentation to KDHE and/or O/O upon written request.

2.14 TERMINATION

2.14.1 Termination for cause-The O/O or Vendor may terminate the contract resulting from this RFP at any time when either Party fails to carry out its obligations under the provisions of this RFP or to make substantial progress under the terms specified in the RFP and the resulting proposal and contract.

2.14.2 The O/O shall provide Vendor with written notice of conditions adversely affecting performance. If after such notice Vendor fails to remedy the conditions contained in the notice within ten (10) days the O/O may issue Vendor an order to stop work immediately and exercise their right to terminate the contract.

2.14.3 Vendor shall provide the O/O and KDHE with written notice of conditions adversely affecting performance. If after such notice the O/O fails to remedy the conditions contained in the notice within ten (10) days Vendor may exercise their right to terminate the contract.

2.14.4 The O/O shall be obligated only for the services performed in accordance with the RFP specifications prior to the date of termination notice.

2.15 WAIVER- In the event of breach of contract or any provision thereof, the failure of the O/O to exercise any of its rights or remedies under this contract shall not be construed as a waiver of any such provision of the contract breached or as an acquiescence in the breach. The remedies herein reserved shall be cumulative and additional to any other remedies at law.

2.16 CONTRACT RENEWAL- When the current Operation, Maintenance, and Monitoring (OM&M) period has expired, the O/O, with KDHE approval, has the option of renewing the contract for a period of time not to exceed two years.

2.16.1 Upon completion of the current contract, line item prices may either remain at the current rate or may be adjusted based on industry and other changes. :

2.16.2 OM&M Progress Evaluation: Once a project has been in OM&M status for two years, KDHE will conduct an in-depth evaluation of the current operating system. Based upon these findings, a determination will be made to 1) continue OM&M with the current consultant, 2) put the project

out for a new OM&M bid, or 3) put the project out for bid as a different scope of work. If the project is put out for a new OM&M bid, the current Vendor may not be eligible to be awarded the contract on the new bid.

SECTION 3.0-STATEMENT OF WORK

3.1 GENERAL INFORMATION

3.1.1 The following information is provided to assist the O/O in obtaining proposals for the scope of work necessary to accomplish the goals outlined herein.

3.1.2 Vendor shall not modify the scope of work without specific written approval from KDHE. If Vendor should discover problems in the SRP at any time during the project that will prevent the remedial action from being successful, Vendor must immediately inform the KDHE Project Manager of those problems. Any modifications to the proposal must be approved in writing by KDHE prior to initiation of work.

3.1.3 Vendor is responsible for insuring that work performed under this contract complies with all applicable standard operating procedures (SOP's) as included in the most recent version of the KDHE-Division of Environment Quality Management Plan (QMP) or directed by the KDHE Project Manager if it is determined by the KDHE that more rigorous operating procedures are warranted. The most recent version of the KDHE-Division of Environment Quality Management Plan (QMP) can be obtained from KDHE or from the KDHE website:

http://www.kdheks.gov/environment

3.1.4 Vendor is responsible for upkeep and cleaning of both the remedial building/trailer/system/compound and the surrounding property to the system. This includes but is not limited to; maintaining a clean trailer, free of trash and dirt accumulation; trash, weed and grass control in the area surrounding the remedial compound; elimination of pooling water in the areas surrounding the compound; maintenance of security/privacy fencing and gates; proper gravel placement if necessary; and an overall neat general appearance. Failure to comply with this requirement could result in denial/reduction of incentive payments.

3.2 SITE SPECIFIC INFORMATION

3.2.1 Review the site specific information for each site in EXHIBIT 1. Conduct the work described as outlined in this document.

3.2.2 Specific questions regarding the SRP contained in EXHIBIT 1 should be submitted in writing to the KDHE Project Manager. Inquiries may be faxed and must reference the specific project. In all cases, no verbal communication will override written communications and only written communications are binding.

3.3 SITE REMEDIATION PLAN EXPECTATIONS

3.3.1 With the establishment of a performance-based payment plan (see SRP Section 5.0-Reimbursement), KDHE expects remedial systems to be successfully operating at least 85% of the two-year operation and maintenance period outlined in this contract. The use of incentives and disincentives is expected to increase the number of operational systems by placing more responsibility on Vendor to satisfactorily maintain those systems. Prospective Vendors must include all costs necessary to accomplish the remediation plan expectations and site goals.

3.3.2 Implement the SRP as described in EXHIBIT 1 of this bid package according to the requirements of this document. The SRP RFP will hold precedence over the specifications as stated in the approved RDP. Any item(s) that are not listed as part of the bid package in EXHIBIT 1, but are required in the SRP RFP, must be accounted for and included as a deliverable.

3.3.3 The Prospective Vendors shall develop a bid for constructing the remedial system contained in the RDP and provide for operational and maintenance costs for the first two years of operation. This includes a full two-year warranty on all equipment. Vendor is responsible for performing all of the operation and maintenance described in EXHIBIT 1 within the Total Project Cost. If determined to be necessary, approval for additional work will be based on line item costs detailed in the Project Bid Proposal Sheets.

Prospective Vendors must include all costs necessary to accomplish the remediation plan expectations. Vendor must implement the remediation plan as designed, within the approved cost for the site on a line item basis.

3.3.4 Remedial equipment and enclosure provided by Vendor must be certified by a National Recognized Testing Laboratory (NRTL).

3.3.5 The contractor will supply the KDHE staff with any necessary software and contact information to obtain remote access to the remedial system.

3.3.6 A signed electrical inspection sheet by a licensed electrician will be included as per Final Remedial Report-Section 6.0-Documentation-Appendix 11.

3.4 REMEDIAL EQUIPMENT SUBSTITUTIONS

3.4.1 All equipment will be bid as specified in the approved RDP. Equipment substitutions will only be considered after the bid has been awarded and will be included with the engineering review.

3.4.2 Equipment substitutions must be approved by the KDHE Project Manager.

3.4.3 The proposed equipment must meet or exceed the performance requirements as set forth by the approved RDP.

3.4.4 KDHE reserves the right to require Vendor to install the equipment specified in the approved RDP if an agreement on the proposed equipment substitution(s) cannot be reached.

3.4.5 Totally enclosed fan cooled (TEFC) will not be an allowable substitution for approved designs with Explosion-proof (XP) equipment.

3.4.6 Failure to bid the equipment in the approved RDP design will result in the bid to be considered a non-responsive bid and will not be considered for approval.

3.4.7 All remedial equipment installed at the site must be new from the manufacturer and represent the most recent make of the equipment specified in EXHIBIT 1 (or approved equivalent); the installation of used, refurbished or out-of-date equipment is not acceptable (see section 5.2.2.4).

3.4.8 Equipment substitutions will be considered during the engineering review. The Project Engineer must submit a list of equipment substitutions, along with all associated equipment specifications, calculations and capital and operating costs. All data related to the proposed substitution must be submitted to the KDHE Project Manager within the specified time frame for review by KDHE. Failure to supply the necessary documentation will result in denial of the proposed substitution and specified equipment will be required.

3.4.9 KDHE will provide a line item in the bid if an engineering evaluation of the remedial design is applicable for the project. The RDP Project Engineer is not allowed engineering hours for RDP review and is expected to install the approved design without modifications, unless approved by KDHE. The hours are to allow the installation engineer an opportunity to review the design for errors and omissions, make equipment substitutions, and make suggestions to enhance the operation of the system. All recommendations must be approved prior to installation.

3.4.10 Equipment substitutions and remedial system modifications will be included in the Certificate of Completion. The Certificate of Completion must be submitted to the KDHE Project Manager prior to the remedial system start-up (Attachment B).

3.5 PROPERTY ACCESS

3.5.1 Vendor is responsible for contacting facility managers, lessee, and tenant, and/or current property owner, all on-site, and off-site property owners to obtain access to construct, operate and monitor the remediation system. Contact will be verbal and in writing. Written permission will be obtained from each owner of the property where access is necessary and must be submitted to KDHE Project Manager prior to any field activities. A copy of the access agreement, and a copy of the site base map with the location of all proposed remedial wells, borings, trenching, and the remedial trailer/job box, signed by both the O/O of the facility, as well as the owner of the property must be submitted to the KDHE Project Manager prior to any construction activities.

3.5.2 Vendor must contact the O/O and tenant (if different) prior to mobilizing for any field activity.

3.5.3 For off-site access, Vendor must utilize city and utility easements instead of private property when practicable. Written permission to drill in city and utility easements must be obtained prior to equipment mobilization. In such cases, Vendor must obtain written permission from both the property owner and the entity granting the easement. Copies of all signed access agreements must be included in the SRP Implementation Schedule Worksheet.

3.5.4 Vendor is expected to act in a professional and respectful manner to any local and agency authorities, utility companies, and the public when requesting access.

3.5.5 A compensation amount may be payable to off-site owners (see Off-Site Access Payment Schedule-ATTACHMENT C); this amount will be eligible for reimbursement from the Trust Fund. The payment may also be used to lease on-site property for remedial equipment, payable to current property owners who were not a party to the Underground Fund Consent Agreement.

3.5.6 If authorization for property access is denied, contact the KDHE Project Manager immediately.

3.6 DRILLING EQUIPMENT AND METHODS

3.6.1 It is the full responsibility of Vendor to evaluate the site-specific geology and other relevant information and determine the drilling method(s) necessary to meet the requirements of the contract at this site.

If changing the drilling method is necessary, Vendor will submit in writing to the KDHE Project Manager a description of the proposed change a minimum of one week prior to mobilizing. The request must be submitted under separate letter from Vendor. KDHE will review the information and provide Vendor with a written response authorizing or denying the proposed change. All costs associated with the change will be the responsibility of Vendor.

In some cases, wells must be completed by rotary or pier rig auger drilling methods. The Prospective Vendor must factor into the bid all costs related to well completion and disposal of drilling fluids and drill cutting wastes, etc. All mobilization costs related to performing multiple drilling methods for the installation of the wells must be included.

3.6.2 Vendor must receive written approval from the KDHE Project Manager before drilling activities can begin.

3.6.3 All wells will be drilled and constructed by a KDHE licensed water well contractor as per the approved design specifications, unless changed by Vendor and approved by KDHE prior to mobilizing to the site (see Attachment D and Attachment E).

3.6.4 A Field Geologist will be on-site and oversee all drilling activities. The Field Geologist will evaluate and record the description of the sediments, to include soil texture, grain size and shape, sorting, color, odor, staining, relative moisture (i.e. dry, moist, wet). Include field screening for contaminant distribution and other pertinent information related to the geology of the site and contamination detected during drilling activities.

3.6.5 Vendor will be responsible, at their costs, for replacing wells that are constructed incorrectly, inadequately developed, and or improperly located.

3.6.6 The selected drilling methods and equipment must be capable of completing the wells to the depth required without causing the migration or dilution of contamination.

3.6.7 The minimum borehole diameter of any well constructed for a SRP project must be eight (8) inches, or four (4) inches larger than the outside diameter of the casing, whichever is larger.

3.6.8 For hollow stem auger drilling, the drill rig capacity must follow:

If Static Water Level (SWL) < 40 ft., a minimum of 3,000 ft-lbs torque is required.
If SWL 40 ≥ 70 ft., a minimum of 5,500 ft-lbs of torque is required.
If SWL 70 ≥ 100 ft., a minimum of 7,000 ft-lbs of torque is required.
If SWL > 100 ft., a minimum of 10,000 ft-lbs of torque is required.

3.6.9 All air sparge wells will be drilled by rotary drilling or hollow stem auger method unless otherwise approved by the KDHE Project Manager. The top of the screened interval shall be a minimum of five feet below the seasonal low static water table and a minimum of five feet below the depth of soil contamination. After the gravel pack is set in place, a two-foot bentonite seal using coated time-release bentonite pellets shall be placed above the gravel pack. The pellets shall be poured into the annulus between the drill stem or auger and the riser at a slow rate to ensure bridging does not take place. A tape measure with a weight on it will be used to ensure proper placement of the pellets.

3.6.10 Bentonite drilling mud will NOT be allowed for any remedial well. Native mud is the preferred fluid of rotary drilling however; polymer drilling materials will be acceptable providing they are both biodegradable and non-polluting. Vendor must explain in the Remedial Implementation Schedule the drilling fluid to be used and the procedures they will use in developing these wells.

3.7 WELLS AND GROUNDWATER SAMPLING REQUIREMENTS

3.7.1 All drilling/sampling information will be recorded in the field notes.

3.7.2 The Project Geologist will stamp and sign the FRR verifying that all the above drilling and sampling procedures were followed as specified in both the SRP and the approved RDP.

3.7.3 All SVE wells will be completed as four-inch wells unless otherwise approved by the KDHE Project Manager.

3.7.4 All wells must be securely covered until completed. Vendor will be responsible for replacing wells damaged prior to completion.

3.7.5 All well completions will meet or exceed the design specification as stated in Remedial Implementation Schedule Worksheet (ATTACHMENT F) with the following exceptions:

3.7.5.1 For wells with the top of the screened interval completed above the water table, the screen seal will be a two-foot layer of

hydrated bentonite (granular, chips, or pellets). The seal will be hydrated with at least one gallon of water for every six (6) inches and completed in six- (6) inch lifts. For wells with the top of the screened interval completed below the water table, the screen seal will be a two-foot layer of coated bentonite above the gravel pack. In either case the pellets shall be poured into the annulus between the auger and the riser at a slow rate to ensure bridging will not take place. A tape measure with a weight on it will be used to ensure proper placement of the pellets.

3.7.5.2 Wells where the screen seal is less than or equal to 40 feet bgs will be grouted with hydrated bentonite as described above, or with a flowable bentonite or cement bentonite grout via tremie.

3.7.5.3 All wells deeper than 40 feet bgs will be grouted by a flowable bentonite grout or cement bentonite. All grouting will be completed by pumping grout through a tremie pipe with a diameter smaller than the well casing and from the screen seal up. Hydrated bentonite (granular, chips or pellets) are NOT considered grout in wells deeper than 40 ft bgs.

3.7.5.4 It is the responsibility of Vendor to ensure the weight and consistency of the grout is designed for the application, lithology, and depth of the well. Deeper wells must be grouted in lifts.

3.7.5.5 Any changes to this design must be approved by the KDHE Project Manager in writing, once justification has been supplied to cause a variance from the original design. Flush-mounted wells require a variance from the KDHE Bureau of Water.

3.7.6 All monitoring well completions less than 75 feet total depth shall be constructed using a minimum of two (2) inch inside diameter (I.D.) casing and screen unless otherwise specified in the site-specific information. Monitoring well completions at a depth of 75 feet or deeper shall be constructed using a minimum of four (4) inch I.D. casing and screen.

3.7.7 Although an estimated or approximate depth to groundwater has been provided, Vendor will be fully responsible for determining the actual depth to groundwater and completing the well(s) to the appropriate depth and in the appropriate lithology according to their intended purpose. It is the responsibility of the Field Geologist to complete and screen all wells properly. Any questions concerning well completion or any deviation in depth to groundwater and or lithology must be brought to the attention of the KDHE Project Manager prior to well installation. Vendor will replace wells at Vendor's expense if wells are not properly located, screened, constructed or completed.

3.7.8 All wells that intersect groundwater must be properly developed no sooner than 24 hours after installation and no later than 14 days after installation. Development of the well may be accomplished by the Mechanical Surging (Bailer or Surge Block) Method, or the Surge-Pumping Method. Wells that are completed in fine sand and silt sediments should be developed by a compatible method so that fine-grained materials will not accumulate into the filter pack. Well development must include documentation that a minimum of 5-10 well volumes and all silts, clays, or sediment created during the drilling process inside the casing have been removed. Vendor is solely responsible for proper development of all wells. Failure of Vendor to remove all the sediment inside the well will result in the denial of the appropriate footage charges and/or the complete well charges. Vendor would then be responsible for replacing the well at Vendor's expense.

3.7.9 On newly completed SVE and AS wells, Vendor must wait a minimum of 72 hours prior to system start-up or pilot testing activities.

3.7.10 All monitoring wells must be properly developed and purged prior to sampling according to the most recent Bureau of Environmental Remediation Standard Operating Procedure (BER SOP). If wells are not sampled within 24 hours following development, three casing volumes must be purged prior to sampling. Groundwater must be allowed to return to static conditions before sampling. Static water level is defined as the level at which water stands in a well that is not being affected by withdrawal. It is expressed as the distance from the top of casing to the water level in the well.

3.7.11 In low-yield wells, Vendor must allow the groundwater to return as close as possible to static conditions before taking a groundwater sample for analysis. If static conditions are not attained or if three well volumes of water cannot be purged before groundwater samples are taken, Vendor must document the reasons and include as part of the field notes and on Table 2.4, Groundwater Analytical Results in the Final Remedial Report.

3.7.12 All well completion information will be recorded in the field notes and provided to KDHE.

3.7.13 All well abandonments and soil borings not completed as wells must follow KAR 28-30-7(d), included in ATTACHMENT G.

3.7.14 Digital Photographs must be submitted in the appropriate document of all newly installed and abandoned wells. Photographs should include the horizon for orientation purposes.

3.7.15 Contact information for all domestic well sampled during remedial activities must be provided to the KDHE Project Manager. A contact form is provided in Attachment H. A new form must be submitted to the KDHE Project Manager each time the contact information changes.

3.8 FIELD AND LABORATORY SOIL SAMPLE COLLECTION AND ANALYSIS

3.8.1 A heated headspace analysis will be conducted on all discrete samples collected in the field, see SRP Section 3.8.2. The analysis will be conducted using a photoionization detector, organic vapor analysis device, colorimetric tubes or other field testing equipment approved by KDHE for hydrocarbon analysis. Field instrumentation must be calibrated according to the manufacturer's recommendations for each piece of equipment at the recommended frequency. At a minimum, each piece of equipment must be calibrated daily. Field personnel must know how to properly calibrate each piece of field equipment used. Calibration records must be included in the field notes.

3.8.2 Each discrete soil sample collected for field analysis will be prepared as follows: fill a clean quart jar or new freezer zipper type bag half full of the discrete sample to be analyzed, seal the jar and let it stand until the sample reaches 70ºF for a minimum of 15 minutes (allowing volatilization to occur) and a maximum of 60 minutes prior to testing.

3.8.3 Soil samples will be submitted for laboratory analysis as specified in Site Remediation Plan Implementation Schedule Worksheet (ATTACHMENT F).

3.8.4 All laboratory analysis will be performed by a laboratory certified by KDHE for the specific analysis and laboratory method as outlined in the SRP RFP bid sheets.

3.8.5 All samples designated for laboratory analysis will immediately, upon collection, be containerized and sealed in a laboratory approved sample container for the constituent of concern, and will be properly preserved and transported to the laboratory. Reimbursement will be denied for any samples that have exceeded holding time prior to analysis.

3.8.6 All borings advanced to a total depth of 60 feet or less, in which remedial wells (i.e. SVE/AS wells) will be installed, will be continuously sampled with split spoon samplers, Shelby tubes, and/or continuous samplers. Sand catchers will be used when necessary to maximize recovery in sand units. All sampling methods and boring logs shall be performed in accordance with the latest ASTM Standards. Each lithologic/soil stratigraphic unit will be fully described on the drilling log and include at

a minimum; soil texture, grain size and shape, sorting, color, odor, staining, relative moisture (i.e. dry, moist, wet), field screened for contaminate distribution, and other pertinent information. Special care shall be taken to identify thin lenses of low permeability constituents that will affect treatment technologies. If the stratigraphic unit is consistent throughout the sample collected, a composite field sample is sufficient for the field screening. Changes of lithology/soil stratigraphy within the samples shall be field screened discretely.

For borings with a total depth of greater than 60 feet, the upper 60 feet will be continuously sampled and logged as described above, unless otherwise approved by the KDHE Project Manager. From 60 feet below ground surface to total depth of the boring, discrete soil / sediment samples will be collected every five feet for logging and headspace analysis.

3.8.7 During the discrete soil sampling process, duplicate soil samples will be collected from each discrete soil sample interval. One of the samples will be placed in the appropriate sample container for analysis in the field using the heated head space technique, see SRP Section 3.8.2. The other sample will be placed in the appropriate sample container for laboratory analysis if required.

3.9 WASTE DISPOSAL

3.9.1 All soil waste and waste water generated during the installation of the remedial system will be treated and disposed of in accordance with all local, state, and federal statutes and regulations. The costs related to such disposal must be included within this bid.

3.9.2 Any remedial project requiring landfarming activities will refer to the landfarming requirements as outlined in Sections 3.3.4 - Disposal of Contaminated Soils and 3.3.5 - Landfarm Treatment of Contaminated Soils in the "Contaminated Soil Excavation and Treatment Criteria RFP".

3.10 TRENCHING AND PIPING

3.10.1 All trenching and piping activities must adhere to the specifications in the approved RDP. Photo documentation will be required for all activities referenced in the section. Photos must include wide angle and close-ups of piping installations.

3.10.2 All remedial lines will be installed on compacted sand backfill with a minimum of six (6) inches below the pipes. Sand will also be placed in two 6-inch layers above the pipes totaling a minimum of twelve (12) inches above the highest horizontal pipe. The sand backfill shall be compacted with a mechanical compactor. After the pipes have been

embedded and compacted, the remainder of the excavation shall be backfilled using sand, river gravel, crushed rock, or native soil. The remaining backfill shall be compacted as per stated above. All remedial piping, trenching and new well completions must remain in good condition for the life of the project. Vendor will be responsible for the repair or replacement of all failed trenching or new well completions for the life of the project, at Vendor's expense.

3.10.3 If the system is being installed at a facility that is currently in operation, Vendor will furnish protective covering for the trench system for continued vehicular and pedestrian traffic flow to minimize impacts to the business. When in the process of installation, adequate barricades shall be provided. For areas not subject to traffic, the trenching should be suitably barricaded to prevent inadvertent access to the trench by pedestrians. Vendor must adhere to all OSHA regulations pertaining to trenching and protective covering.

3.10.4 Prior to filling and compaction, a piping survey will be conducted using a theodolite or level, or comparable equipment, to guarantee the slope of the piping is sufficient to allow condensates to drain back into the well. The survey will consist of (at a minimum) two points of each end of each line of the system for those runs less than 50 ft. in length. For runs greater than 50 ft., an additional survey point located equidistant between the two end points must be included. A trenching/piping map including a profile for piping and slope verification will be included in the FRR.

3.10.5 All trenching information including slope measurements and pipe pressure testing values will be recorded in the field notes and provided to KDHE in the FRR.

3.10.6 All trenching, piping, compaction, pressure testing, and the resulting survey must be completed under the guidance of the Project Engineer. Subsequent drawings must be signed, dated, and stamped by the Project Engineer.

3.10.7 Pressure testing of all underground AS/SVE system components include, but are not limited to, pipe, elbows, tees, etc. shall be subjected to a positive pressure test prior to the replacement of the trench final cover. Pressure testing of all SVE/AS lines will be conducted prior and post backfilling of trenches and/or excavated areas. Pipe segments shall be left exposed for pressure testing unless Vendor determines partial backfilling is required for safety. The test will require both ends of the line segment to be sealed before pressurizing to the lesser of 20 psig or one and a half times the system design pressure using a portable air compressor or air tank. The duration of each pressure test shall be at least 10 minutes. The source of pressure should be isolated before conducting each pressure test.

Pressure shall be measured every minute with a suitable pressure device calibrated to within plus or minus 10 percent of the original test pressure over the duration of the test, then the segment will be determined to have passed. Partially covered line segments failing the above pressure test protocol will need to be uncovered to expose the piping and joints for inspection prior to re-testing. Joints shall be tested by means of soap and water or an equivalent nonflammable solution in order to identify areas of leakage for repair. Final backfilling activities should not commence until all AS/SVE flow lines in the trench have passed the pressure test and the slope of each SVE line has been verified. All system testing shall be done with due regard for the safety of employees and the public.

3.11 REMEDIAL SITE SURVEY

3.11.1 The Remedial Site Survey will include information from the Full Site Survey in the RDP including building locations, parking lots, streets, property boundaries, pump islands, former and existing tank basins, and wells. New information will include the locations of the remedial system, trenches, top of casing and pad elevations, locations of all new SVE/AS/other remedial/monitoring wells, and information related to the remedial system. Well elevations and locations will be measured to within 0.01 ft. All other features and locations will be measured to within 0.1 ft. This survey will be conducted by a Kansas Registered Land Surveyor (RLS).

3.12 PROPERTY RESTORATION

3.12.1 Photographs submitted in digital format must be taken to photo-document the site conditions prior to starting any field activity at the location. After construction is completed, another series of photographs must be taken to document all site restoration. Photographs will be made of on-site parking surfaces, drive ways, curbs/sidewalks, grass areas, buildings/foundations, and all secondary containment structures, foundations and retaining walls located within 50 feet of any drilling, trenching, or excavation activities. A detailed log must be generated and available to KDHE for verification of utility locates and contacts which were made prior to any activities.

3.12.2 Any property damaged or destroyed during implementation of the project must be repaired to its original condition within 30 calendar days after the damage or destruction has occurred. All damaged property (i.e. marked utilities, marked product lines, marked electrical supplies, etc.) will be repaired or replaced at Vendor's expense. Failure to restore the property to (at least) original condition within 30 calendar days will result in denial of incentive payments until restoration is complete. Failure to restore the property could result in disqualification from KDHE Trust Fund work.

3.12.3 Vendor must notify KDHE District and Topeka offices immediately and describe the situation and affected utility or other.

3.12.4 Utilities damaged by Vendor, or their subcontractors, will be repaired by Vendor. All repairs must be made by a qualified, bonded, and licensed professional, and must be completed in a period agreeable to the affected party and the utility. Losses including business costs, hours of operation, equipment malfunctions, decrease in staff hours, etc. will be the responsibility of Vendor.

3.12.5 If any landscaped areas are disturbed during construction activities, restoration must be completed by a Landscaping Professional. Documentation of the restoration will be required.

3.13 REMEDIAL SYSTEM START-UP REQUIREMENTS

The following information will be included in the FRR for each component of the remedial system placed into service during start-up (Section 1.8). Oxygen injection system startup requirements will be discussed as an Addendum to the bid.

3.13.1 SVE System Start-up Requirements

It is important no baseline data be collected until observation well vacuum response data is indicative of equilibrium conditions. At start up for soil vapor extraction (SVE) system(s), record the following data:

3.13.1.1 Field effluent concentrations in parts per million by volume (ppm_v) at the manifold for each SVE well and effluent concentrations from the entire system.

3.13.1.2 Air flow rate in standard cubic feet per minute (scfm) at the manifold for each SVE well and for the total system.

3.13.1.3 Vacuum measurements in inches of water column (in. H_2O) at the manifold and at the well head for each SVE well.

3.13.1.4 Vacuum measurements (in. H_2O) from observation wells. System vacuum influence will be determined by recording vacuum responses at all properly screened wells located within estimated Radius of Influence (ROI) determined during pilot testing.

3.13.1.5 Vacuum measurements from observation and SVE wells while the SVE system is operating alone.

3.13.1.6 Vacuum measurements from observation and SVE wells

while the SVE system is operating in conjunction with the air sparge system.

3.13.2 AS System Start-up Requirements

At start up for AS system(s), record the following data:

3.13.2.1 Calculate the pressure in pounds per square inch (psi) necessary to displace the water column in each air sparge well to the top of the screened interval (**the minimum theoretical injection pressure.**) This pressure calculation is an estimation only.

3.13.2.2 Air Sparge line integrity and actual injection pressure for each air sparge well must be determined by the following method:

3.13.2.2.1 Start sparge system with one bank of the split air sparge manifold at design operating pressures and flow rates. Record pressures from each line at the manifold and at the wellhead with the digital manometer.

3.13.2.2.2 Isolate one line of the bank by closing the valve at the manometer. Record the line pressure at the manifold when the pressure in the line stabilizes.

3.13.2.2.3 Observe the closed line pressure during a period of two minutes. Record the pressure in 30-second intervals during the two-minute test (**shut-in test**) using the digital manometer.

3.13.2.2.4 Slowly open the valve and record the pressure when measurable airflow resumes (injection pressure).

3.13.2.2.5 With the digital manometer, measure and record pressure at the wellhead.

3.13.2.2.6 Repeat this test for each line on this bank of the manifold.

3.13.2.2.7 Switch to the other bank of the manifold and repeat the process for each line on that bank.

3.13.2.2.8 Record pressure (psi) and flow (scfm) measurements at the manifold for each air sparge well within each bank while the bank is operating at optimal flow. Collect wellhead pressures for each sparge well while operating at optimal flow.

3.13.2.11 Perform the following analyses:

3.13.2.11.1 Note any airflow prior to injection pressure for each line.

3.13.2.11.2 Compare the minimum theoretical injection pressure to the observed stable pressure from the shut-in test (shut-in pressure) on each well. A continual drop in line pressure below the minimum theoretical injection pressure indicates that the line is leaking.

3.13.2.11.3 Compare shut-in pressure to actual injection pressure. The injection pressure must be equal to or greater than the theoretical pressure.

3.13.2.11.4 For each sparge line, plot pressure versus time for each two-minute shut-in test. A pressure loss of greater than 10% during the test for any individual line will be considered a failure and must be brought to the attention of the KDHE Project Manager for further evaluation and possible remedy.

3.13.2.11.5 Compare manifold versus wellhead pressure readings.

Dissolved oxygen (DO) measurements will be collected at all on-site monitoring wells that intersect the water table.

3.13.3 Vendor must demonstrate that the interlock between the SVE blower and the air sparge compressor is operational.

SECTION 4.0-DELIVERABLES

4.1 WORK NOTIFICATION REQUIREMENTS

4.1.1 Vendor will notify the O/O, the KDHE Project Manager, and the appropriate KDHE District Office personnel, by telephone or in writing, three days prior to initiation of any work outside the routine monthly/quarterly OM&M. The notice will include the date and time work is to begin and a schedule of implementation. Failure to provide adequate notification to all necessary parties may result in denial of payment for work performed.

4.1.2 Vendor will notify the KDHE Project Manager and the appropriate KDHE District Office personnel, by telephone or in writing, 72 hours in advance of the initial start up of the remedial system. The notice will include the date and time start up will take place.

4.1.3 Vendor will notify the KDHE Project Manager and the appropriate KDHE District Office personnel, by telephone or in writing, 72 hours in advance of quarterly OM & M event.

4.2 DEADLINES AND NOTICE TO PROCEED

4.2.1 The RDP Project Engineer is not allowed engineering hours for SRP review and is expected to install the approved design without modifications.

4.2.2 Vendor will sign the contract with the O/O within two weeks after the bid approval date. An Engineering Review must be submitted within two weeks after the contract has been signed. Vendor will complete and submit two copies of the SRP Implementation Schedule Worksheet (ATTACHMENT F) to KDHE within 30 days after the contract is signed between Vendor and the O/O, or within 15 days after the Engineering Review is submitted.

4.2.3 The schedule must include a complete list of all subcontractors, major equipment suppliers (defined as equipment items costing $1,000.00 or more), and all laboratories performing analytical services. Any variation from this list must be pre-approved in writing by KDHE.

4.2.4 KDHE will review the SRP Implementation Schedule Worksheet (ATTACHMENT F) and provide written comment, or if approved, written authorization for Vendor to proceed within fourteen (14) days following the date KDHE receives the schedule.

4.2.5 Vendor will proceed with field activities after KDHE has approved, in writing, the SRP Implementation Schedule Worksheet (ATTACHMENT F).

Extensions to the implementation schedule may be allowed due to extreme weather conditions, property access or permitting problems. Extensions must be requested in writing prior to any due dates for consideration.

4.2.6 Vendor must have the remedial system(s) installed within 90 days of the SRP Implementation Schedule Worksheet (ATTACHMENT F) approval and the system must be fully operational within 120 days of KDHE SRP Implementation Schedule Worksheet approval date.

4.2.7 All system start-ups will be conducted during normal KDHE business hours and with concurrence of the KDHE Project Manager.

4.2.8 Vendor will submit two copies of the FRR to KDHE for review within sixty (60) days of system start-up. Following submittal of any changes and subsequent approval of the FRR by the KDHE Project Manager, a final copy will be sent by Vendor to the O/O(s).

4.2.9 The initial monthly scheduled visit due date will start 30 days after the official start-up date, with a report due within 15 days of the monthly site visit. Subsequent monthly reports will be due every 30 days thereafter, except for those months that require a QMR. Vendor is to maintain a schedule which allows them to complete their site visits within six (6) days of the scheduled site visit. Reimbursement will be denied for monthly data submittal reports not received within 15 days of the site visit. There is no grace period. Failure to comply with the monthly data submittal will result in denial of payment for the applicable monthly report.

KDHE will allow some flexibility in establishing the monthly site visit date, to coordinate with Vendor's existing sampling and remedial system operation schedule in the area. Any such variance must be requested and approved by the KDHE Project Manager within the first 60 days of operation.

4.2.10 Vendor will submit Quarterly Monitoring Reports (QMRs) to the KDHE Project Manager within 45 days after the end of the quarterly reporting period. See QMR (ATTACHMENT I) for report format, which is available to Vendor on disk as a Quattro Pro or Excel document.

4.2.11 Quarterly monitoring report costs will be denied for reports received 1 to 30 days late. All costs associated with an event will be denied if the report is received more than 30 days late. All reports received after the due date will affect Vendor's eligibility for future Trust Fund work. If a report is not received, Vendor will jeopardize their eligibility and be in violation of their contract with the O/O.

4.4 SRP SUBMITTALS

4.4.1 Submit two copies of the Engineering Review, if applicable.

4.4.2 Submit two copies of the Remedial Implementation Schedule Worksheet on the form supplied in ATTACHMENT F. Additional information should be included as needed.

4.4.3 FINAL REMEDIAL REPORT

4.4.3.1 Submit two BOUND copies of the FRR to KDHE for review. Following submittal of any changes and subsequent approval of

the FRR by the KDHE Project Manager, a final copy will be sent by Vendor to the O/O(s). The FRR will be a comprehensive description of all work performed, data requested, and information gathered during all activities conducted under this RFP.

4.4.3.2 Incomplete reports will not be accepted by KDHE; a received date will not be recorded.

4.4.3.3 The FRR is not considered a QMR, nor can a QMR be included with the FRR. All QMRs must be under separate cover.

4.4.3.4 All engineering drawings submitted to KDHE will be stamped, signed and dated by the Project Engineer as per KAR-66-6-1 et seq.

4.4.3.4.1 The FRR will include all information outlined in the format and order as described in Attachment J.

4.4.3.4.2 Telemetry system software, if applicable, must accompany the Final Remedial Report.

4.4.4 Vendor must submit Monthly reports as described in Section 4.2.9. Vendor must use the format provided in ATTACHMENT I.

4.4.5 QUARTERLY OPERATION/MAINTENANCE AND MONITORING REPORTS (QMR)

4.4.5.1 The QMRs are designed to contain the operational information collected during Vendor's site visits. Vendor is responsible for making necessary adjustments to the operating system for optimization. Vendor is required to record operational data upon arriving at the site, make necessary adjustments for barometric, geologic, mechanical variations, etc., and record post-adjustment data

4.4.5.2 A blank QMR is provided in ATTACHMENT I, and is available to all Vendors on disk as a Quattro Pro or Excel document. THIS FORMAT MUST BE USED FOR ALL QMRs. Two hard copies of each QMR must be submitted to KDHE within 45 days after the end of the quarterly reporting period. Vendor will submit one copy to the O/O. The QMRs must be bound.

4.4.5.3 Provide a brief write-up of system operation during the quarterly period. Include any problem experienced with the systems, faulty equipment, and steps taken by Vendor to rectify these problems. Vendor is responsible for reviewing collected data and making recommendations to improve or continue optimization of the system(s).

4.4.5.4 Quarterly Isocentration Maps: Included with each QMR will be isoconcentration maps of Total BTEX, Benzene, MtBE, 1,2-DCA and Naphthalene as well as any other chemicals of concern as listed in EXHIBIT 1 of the SRP RFP.

4.4.5.5 Composite Historical Contamination Trend Map: This should be an ongoing composite map of quarterly snapshots of the above referenced contamination plumes. These should be, at a minimum, 3 X 4-inch reduction of the isoconcentration maps from FRR-Section 3.0-Maps-Figure 3and placed on 11 X 17-inch paper.

SECTION 5.0-REIMBURSEMENT

5.1 Reimbursement Guidelines

5.1.1 All Requests for Reimbursement must include the following:

5.1.1.1 Completed Request for Reimbursement forms signed by the O/O or their authorized representative. (Must be original signatures - copies not accepted.) Request for Reimbursement forms must be complete, clean and accurate.

5.1.1.2 If the Request for Reimbursement is being submitted by Vendor as "Attorney in Fact" for O/O, then the following must occur:

5.1.1.2.1 A copy of the "Attorney in Fact" agreement must either be on file with KDHE, or included with the request.

5.1.1.2.2. The Request for Reimbursement form must be marked to indicate it is being submitted as "Attorney in Fact" for O/O.

5.1.1.2.3. The Request for Reimbursement form must shown the correct remittance address.

5.1.1.3 Vendor invoices must be in the same format as the Bid Proposal Sheets.

5.1.1.4 Completed Monitoring/OMM Event Summary sheets for all monthly and quarterly activities. See Monitoring/OMM Event Summary-ATTACHMENT K.

5.1.2 Total reimbursement will not exceed the lesser of the actual costs incurred or the total cost for each line item in the Project Bid Proposal Sheet unit pricing.

5.1.3 Vendor will only receive payment for work conducted and accepted in accordance with the specifications outlined in this document.

5.1.4 Payment to Vendor will be prorated in accordance with actual work performed (i.e. if only 50% of the scheduled drilling activities are required

then 50% of the drilling activities will be reimbursed). The following categories will be prorated: Drilling Activities, Waste Handling and Treatment, Sampling and Analytical, Permits, Non-Lump Sum items on Project Bid Proposal Sheets (i.e., trenching, etc.).

Costs for equipment not required in the remedial design will be reimbursed by the following guidelines: 1) Vendor will obtain three bids for KDHE approval, 2) KDHE will reimburse lowest bid cost plus 10%, and 3) labor costs for installation will be reimbursed with prior approval in writing by KDHE.

5.1.5 Vendor may submit invoices for reimbursement at the following stages of the Project:

Implementation schedule	Work must be completed.
Drilling	Work must be completed.
Start-up	Work must be completed.
Final Remedial Report	Work must be completed.

Once the implementation has been completed KDHE will require that bills be grouped by the applicant so that no more than one Request for Reimbursement is submitted each month to cover all on-going expenses such as utilities, sewer charges and consulting fees for the site.

5.2 Remediation System Performance Payments

5.2.1 Amount Withheld

5.2.1.1 Upon approval of the bid amount, 20% of all costs, including equipment and labor, for each of the following categories will be held back (whichever technology is applicable to the project):

5.2.1.1.1 Implementation schedule
5.2.1.1.2 Drilling Activities
5.2.1.1.3 SVE system installation
5.2.1.1.4 AS system installation
5.2.1.1.5 Bioventing system installation
5.2.1.1.6 Free product recovery system installation
5.2.1.1.7 Off-gas treatment system installation
5.2.1.1.8 Any treatment system installation not listed above
5.2.1.1.9 Start-up
5.2.1.1.10 FRR

5.2.1.2 Twenty percent will be released from each category when:

5.2.1.2.1 Vendor provides adequate documentation to the KDHE Project Manager showing that the system has been successfully operating for 90 days. Hour meters and telemetry systems must be fully operational before the system is considered successfully operational. The system must operate at optimal design parameters, or at maximum efficiency as dictated by current site conditions at start-up and agreed upon by the KDHE Project Manager.

5.2.1.2.2 All required signatures and documentation including the FRR has been submitted and approved. The As-Built report must include release of liens from all subcontractors, major equipment suppliers and analytical laboratories.

5.2.2 Incentive Payments

5.2.2.1 Upon approval of the bid amount, an additional sum for the amount of 10% of the total project cost will be encumbered and set aside.

5.2.2.2 This amount will be divided into eight equal payments, to be paid at the end of each quarterly monitoring period during the initial two year operation and maintenance period.

5.2.2.3 Incentive payments are intended for active remediation systems only. Incentives will not be paid for excavations, public water treatment systems, Time and Materials projects, or other enhanced natural attenuation projects.

5.2.2.4 If any unapproved deviation from the design is found in use on the site, no incentive payments will be made for the life of the project, until corrected by Vendor and approved by KDHE.

5.2.2.5 Payment for each quarterly monitoring period will be based on the following criteria:

5.2.2.5.1 Operational time for the remedial equipment

5.2.2.5.1.1 QMR-ATTACHMENT I will be used to document operating hours for each piece of equipment. Hour meters and telemetry systems must be completely installed and operational for the system to be considered operational. Any operating time omissions will result in nonpayment of the report for that quarter.

5.2.2.5.1.2 Equipment Building Log-In Sheet-ATTACHMENT L is a log sheet to be posted on a clipboard inside the remedial equipment building. Anyone entering the building must sign in

and provide appropriate information. A copy of this sheet will be submitted with the QMR, Attachment I.

5.2.2.5.1.3 ATTACHMENT M is an operational status sheet to be faxed to the KDHE Project Manager within 48 hours when there is any change in the operational status of a remedial system.

5.2.2.5.1.4 It is the responsibility of Vendor to provide adequate documentation as to the uptime of the system and successful system operation. This should include, but is not limited to, hour meters, flow totalizers, sign-in sheets, remote telemetry system data logger information, data from bypass valves, electrical usage, dissolved oxygen measurements, both manifold and wellhead measurements for SVE and AS, and correspondence with the KDHE Project Manager.

5.2.2.5.2 Operation of the remedial equipment at optimal performance

5.2.2.5.2.1 QMR-ATTACHMENT I will be used for quarterly reporting purposes. Any operational data omissions (flow rates, etc.) or analytical data omissions may result in nonpayment for that quarter.

5.2.2.5.2.2 Any deviation from expected performance due to changing site conditions or other valid reason must be agreed upon by the KDHE Project Manager for the system to be considered operational.

5.2.2.5.2.3 An exception to the operation of the remedial equipment at optimal performance may be made if a technology has been temporarily shut down pending confirmation that remedial goals have been achieved. This will only be allowed with prior written approval from the KDHE Project Manager.

5.2.2.5.2.4 If sufficient pressure is not applied to overcome hydrostatic head and produce air flow into the aquifer, the entire AS system will be considered not operational and no incentive payments will be released.

5.2.2.5.2.5 Projects that involve more than one remedial technology (i.e. SVE, air sparging, free product recovery, etc.) or more than one system at a site will be paid out based on the technology that operates the least.

5.2.2.5.3 Area surrounding system and the equipment enclosure must be maintained, as referenced in 3.1.4.

5.2.2.5.4 Documented completion of remediation prior to end of two-year period will result in full incentive payment of remaining quarters, if remaining SRP requirements have been satisfied.

5.2.2.6 Quarterly incentive payment plan

When a quarterly incentive payment has been approved, the payment will be included with the reimbursement for Vendor's invoice from the next quarterly OM&M event.

5.2.2.6.1 Remedial system operating 85% or more during that quarter at optimal performance

Payment = 100%

5.2.2.6.2 Remedial system operating 85% or more during that quarter at reduced performance

Payment = 90%

5.2.2.6.3 Remedial system operating 50% or more, but less than 85% during that quarter at optimal performance

Payment = 50% - 85% (actual percent operational)

5.2.2.6.4 Remedial system operating 50% or more, but less than 85% during that quarter at reduced performance

Payment = 50% - 85% (actual percent operational) minus 10%

5.2.2.6.5 Remedial system operating less than 50% during a quarter at any capacity:

No quarterly incentive payment

5.2.2.6.6 Late QMR

Payment = 10% reduction per full week past deadline (used in conjunction with any of the above scenarios)

5.2.2.6.7 Up to 25% reduction for not maintaining a clean site/compound.

5.3 Disqualification

The following conditions may result in disqualification and removal from the project (See KDHE Policy and Procedure Manual for disqualification and reinstatement guidelines)**:**

5.3.1 Remedial system operating less than 50% of the time at any capacity for more than one quarter without Vendor providing written justification and obtaining KDHE Project Manager approval.

5.3.2 FRR 60 days beyond established deadline.

5.3.3 QMR 60 days beyond established deadline.

5.3.4 Remedial system start-up 60 days beyond established start-up deadline.

5.3.5 Using any unapproved used equipment on the project.

5.4 Documentation Requirements

5.4.1 It is the responsibility of Vendor to provide adequate documentation as to the uptime of the system and successful system operation. Hour meter readings are essential documentation for verifying operational up-time of equipment. Hour meters must be wired correctly to record actual time of operation of each piece of equipment. KDHE will no longer solely allow time charts, flow totalizers, sign-in sheets, telemetry system information, data from bypass valves, electric usage, etc. to verify equipment uptime for purposes of Incentive Payments. Failure to provide actual hour meter readings, or hour meters that are wired incorrectly, will result in denials of incentive payments for the quarter and could result in disqualification from future SRP work.

5.4.2 Vendor invoices must be submitted in the same format as the Bid Proposal Sheets.

5.4.3 Failure to adequately provide proper documentation will result in denial of the incentive payment for that quarter.

SECTION 6.0-PROPOSAL DEFINITIONS

6.1 **ADDITIONAL CLAY (SUPPLY)-** This line item includes additional clay needed to complete the clay cap as specified in the RDP. This line item includes all costs associated with supplying, the clay. This line item will be reimbursed by the cubic yard (in situ) on a cost plus ten percent basis.

6.2 **ADDITIONAL CLAY (PLACE, COMPACT)-** This line item includes additional clay needed to complete the clay cap as specified in the RDP. This line

item includes all costs associated with placement and compaction of the clay. This line item will be bid on a per cubic yard basis (in situ).

6.3 **AIR SPARGE TEST WELL CONVERSION-** This line item includes all labor, materials, and equipment associated with connecting an existing air sparge pilot test well to the air sparge system. This line item will be bid on a per well basis.

6.4 **BORING PERMITS-** This item shall include the cost charged by the local government entity for drilling or installing a soil boring or monitoring well on city property, city easements, or any other property. This item will be bid on a per boring/well basis.

6.5 **COMPOSITE HISTORICAL CONTAMINATION MAPS-** This item shall include all costs to generate and include in the QMR a compilation of historical quarterly isoconcentration maps of requested analyte(s). This map will be a time series of historical quarterly maps. These maps will be three by four-inch minimum size and printed on 8 X 11-inch paper, to 11 X 17-inch paper as necessary.

6.6 **CONCRETE/ASPHALT SAWING-** This line item consists of equipment, materials, and labor for sawing concrete and/or asphalt. This line item will be bid on a per linear foot basis. NOTE: Trenching line item includes concrete/asphalt sawing (see Trenching definition).

6.7 **CONCRETE/ASPHALT DISPOSAL-** This line item consists of all costs associated with loading, transportation, and disposal of waste concrete/asphalt generated during excavation activities. This does not include waste materials generated during trenching. Disposal ticket with weight will be required for reimbursement. This line item will be bid on a per ton basis.

6.8 **CONCRETE/ASPHALT REPLACEMENT-** This line item consists of equipment, materials, and labor for replacing concrete and/or asphalt. Replacement material must be equivalent or better in material grade, structural reinforcement, and thickness of the original surface. This line item will be bid on a per square foot basis. NOTE: Trenching line item includes concrete/asphalt replacement (see Trenching definition).

6.9 **CONTAMINATED SOIL EXCAVATION-** This line item includes all costs associated with excavating and loading contaminated soil for transportation to the land farm site. This line item will be bid on a per cubic yard basis (in situ).

6.10 **CONTAMINATED SOIL TRANSPORT-** This line item includes all costs associated with transporting contaminated soil to the land farm site and offloading the soil. This line item will be bid on a per cubic yard basis (in situ).

6.11 **DATA SUBMITTAL-** This line item includes the cost to submit monthly visit data to the KDHE Project Manager within 15 days of being collected. This line item will be bid on a per each basis. Reimbursement will be denied for data submitted later than 15 days of the site visit.

6.12 **DECONTAMINATION-** This item shall include the per foot cost for decontamination of all sampling and drilling equipment as described in the KDHE SOP, BER-05.

6.13 **DIRECT PUSH EC LOG RIG MOB-** This line item shall include all costs for transporting direct push EC equipment, personnel, and supplies to and from the site and locations around the site. Direct Push EC Log Rig Mob costs must be included for EC Log Rig work listed in the bid sheets. This line item will be bid on a per mob basis.

6.14 **DIRECT PUSH EC LOG RIG W/CREW-** This line item shall include all labor, equipment, materials, hole plugging material, and decontamination necessary to advance the electric conductivity probe with direct push equipment and generate electric conductivity logs for the footage indicated on the bid.

6.15 **DIRECT PUSH RIG MOB-** This line item shall include all costs for transporting direct push drilling equipment, drilling personnel, and drilling supplies to and from the site and locations around the site. Direct Push Rig Mob costs must be included for all direct push work listed in the bid sheets. This line item will be bid on a per mob basis.

6.16 **DIRECT PUSH RIG W/CREW-** This item shall include all costs associated with use of the direct push rig, crew, and all equipment. This should only include the operator and helper(s). Do not include any professional field staff responsible for collecting and conducting field analyses of samples. This item must be bid on a per foot basis.

6.17 **DRILL RIG/WITH CREW-** This item shall include all costs associated with use of the drilling rig, drilling crew, and all drilling equipment. This should only include the driller and helper(s). Do not include any professional field staff responsible for collecting and conducting field analyses of drilling samples. This item must be bid on a per foot basis.

6.18 **DRILL RIG MOBILIZATION-** This line item shall include all costs for transporting drilling equipment, drilling personnel, and drilling supplies to and from the site and locations around the site. Rig mob costs must be included for all drilling listed in the bid sheets. This line item will be bid on a per mob basis.

6.19 **ELECTRICAL HOOK-UP-** Includes all equipment, supplies, and labor costs to install and hook-up the electrical meter to the remedial system control panel to make the remediation system(s) operational. The work must be performed in

accordance with EXHIBIT 1. The local electrical utility service installation charges will be handled by direct billing to KDHE and directed to the attention of KDHE Contractual Services Unit (see Attachment N).

6.20 **ELECTRIC METER AND PRIMARY ELECTRICAL SUPPLY AND ESTABLISHING COMMUNICATIONS TO A REMEDIAL SYSTEM-** Please see Attachment N to this RFP for definition and directions.

6.21 **ELECTRICAL INSPECTION-** To ensure compliance with the National Electric Code, some municipalities may require an electrical inspection. This item will be bid on a Lump Sum basis.

6.22 **ENGINEERING REVIEW-** This line item must include costs for the Project Engineer to review the RDP, as per SRP Section 3.0-Statement of Work-Section 3.4.9. The goal of the review is to identify errors in the remedial design that will prevent successful operation of the remedial system and recommend equipment substitutions. The engineering review must be stamped and signed by the SRP Project Engineer per KAR-66-6-1 et seq. This line item will be bid on an hourly basis. This line item will not be allowed if the RDP Project Engineer is the SRP Project Engineer.

6.23 **EXCAPS™-** This line item includes the purchase and installation of 2-inch and 4-inch ExCAPS™ on SVE wells and observation wells. These caps are used to measure pressure readings with a digital manometer. This item will be bid on a per each basis.

6.24 **EXCAVATION AREA RESURFACING-** This line item includes all costs associated with resurfacing the excavated area. The resurfacing must be equivalent or better in material grade, structural reinforcement, and thickness than the original surface. Vendor will be responsible for repair or replacement of all failed or subsided resurfacing for the life of the project, at Vendor's expense. This line item will be bid on a square foot basis.

6.25 **EXCAVATION EQUIPMENT MOBILIZATION-** This line item includes all costs related to mobilizing all equipment and materials necessary to conduct the scope of work associated with excavation activities as outlined in the Remedial Design Plan. This line item will be bid on a lump sum basis.

6.26 **FIELD GEOLOGIST-** This is the designated site representative for Vendor. This position works under the direct supervision of Vendor's designated Professional Geologist. Minimum qualifications for this position are:

1) Has a Bachelor of Science Degree in Geology from an accredited four-year college or a related degree with a minimum of 30 semester hours of geologic course work.

2) Has overseen drilling activities and has described and recorded the subsurface lithology during the drilling of at least 21 boreholes.

3) Has performed a minimum of 3 successful soil vapor extraction /air sparge tests of at least eight hours duration per test.

6.27 **FIELD NOTES**- These are a complete and accurate account of all field activities that relate to work conducted on a Trust Fund site. The notes are to be kept in a bound, hard covered notebook with waterproof, resin-impregnated paper. Field notes are a legal document and must be treated as such with a new page for each day work is conducted. All entries must be legible, and errors should be lined out with a single line with no erasing. The notes should include but not be limited to date, time, site name/project number, weather conditions, drill crew/field staff/support personnel, and contacts on and off site. A complete description of all field activities must be recorded: field equipment calibration, drilling and excavations with drill rig size/type and/or equipment used, amounts and types of material used, depths reached, sediments, field readings, all amounts of material used for completions; pilot testing: distance from each extraction or injection well to each observation well, and other information detailed under SVE or AS testing; trenching/piping installation: description of soils removed, bedding material, and piping elevation survey information; and all information needed for complete record keeping. Hand drawn maps/charts should be included when necessary. At the end of the work day, a diagonal line will be drawn through any remaining space on the page and the keeper of the field notes shall sign and date the page. Field notes must be made available upon request by KDHE personnel, and included within Appendix 5-Field Notes of the FRR .

6.28 **FIELD STAFF**- All field staff required to complete the remedial implementation must be listed by title within the bid proposal sheets. Line items within this category will be bid on a per hour basis.

6.29 **FIELD STAFF (GROUNDWATER SAMPLING)-** This category will include all labor associated with well gauging, proper well purging, collection and preservation of groundwater samples that will be submitted for laboratory analysis, and preparation of groundwater samples for shipping. Labor listed in this category will be bid on a per well basis.

6.30 **FIELD STAFF (SYSTEM)-** This category will include all staff time required to operate, maintain and monitor the remedial system. This work will include, but is not limited to, maintaining remedial equipment per manufacturer's specifications, removing water that may collect in remedial lines/equipment, recording required system operational data, cleaning and/or replacing filters, cleaning and/or replacing malfunctioning flow meters and pressure gauges, and keeping the enclosure and enclosure compound clean and free of vegetation. Labor for personnel listed in this category will be bid on a per hour basis.

6.31 **FIELD TEST EQUIPMENT**- This item shall include the per day costs to use the listed field analytical equipment such as a photoionization detector, organic vapor analyzer, colorimetric detector tubes, interface probe, etc.

6.32 **FINAL REMEDIAL REPORT (FRR)**- This item shall include all labor and equipment costs to properly complete and submit the FRR. The FRR requirements and format are included in SRP Attachment J - Final Remedial Report of this document.

6.33 **HAZARDOUS SUBSTANCE**- This shall have the meaning ascribed to such term by Section 101 of the Comprehensive Environmental Response, Compensation and Liability Act (CERCLA) of 1980 of the United States as in effect on January 1, 1992.

6.34 **KDHE PROJECT MANAGER**- This is the KDHE staff geologist/environmental scientist designated to be the lead technical interface with Vendor.

6.35 **LABORATORY ANALYTICAL METHODS**- This item shall include designation of the EPA methods to be used for laboratory analysis of air, soil, and water samples.

6.36 **LABORATORY NAME**- The name of the KDHE-approved laboratory that will be performing the analyses of air, water, and soil samples.

6.37 **LANDFARMING ACTIVITIES-** Costs associated with line items included under this category must account for all mobilizations, equipment, materials, and labor related to constructing the land farm cell(s), spreading, and turning the contaminated soil as specified in the Remedial Design Plan for the number of events indicated on the bid proposal sheets.

6.38 **LANDFARM CELL CONSTRUCTION-** This line item includes all mobilizations, equipment, labor, and materials associated with constructing the land farm cell(s) as specified in the Remedial Design Plan to accommodate the volume of contaminated soil listed in the Project Bid Proposal Sheets. Utilities must be located prior to land farm construction. No land farm should be built over underground utilities or on utility right-of-ways. This line item will be bid on a lump sum basis.

6.39 **LANDFARM CONFIRMATORY SOIL SAMPLING-** Costs associated with line items included under this category must account for all mobilization, lab costs, equipment, materials, and labor related to collecting confirmation samples and associated lab analyses of the land farmed soils and specified in the Remedial Design Plan. This work will be performed during scheduled monthly and quarterly OMM events.

6.40 **LANDFARM FIELD SCREENING-** Costs associated with line items included under this category must account for all mobilization, equipment, materials, and labor related to conducting field screening of the land farmed soils and specified in the Remedial Design Plan for the number of events indicated on the bid proposal sheets. This work will be performed during scheduled monthly and quarterly OMM events.

6.41 **LANDFARM RESTORATION-** Costs associated with line items included under this category must account for all mobilization, equipment, materials, and labor related to restoring the land farm site to pre-land farm conditions.

6.42 **LANDFARM RESTORATION MOBILIZATION-** This line item shall include all costs associated with mobilizing equipment and personnel required for land farm restoration. This line item will be bid as a lump sum.

6.43 **LANDSCAPED AREAS**- Any area located within the remedial project that has either been previously landscaped or where grass and vegetation have been maintained. These areas will require a professional landscaping company to restore to the original condition.

6.44 **LANDSCAPING PROFESSIONAL**- An individual or company that performs landscaping as a primary line of business, and possesses a tax ID number and liability insurance. The landscaping professional cannot be an employee of Vendor.

6.45 **MISCELLANEOUS**- Required items not listed in the bid sheets. Vendor is responsible to ensure all required equipment, labor, and materials necessary to implement this scope of work are included in the bid. Required items omitted from the bid sheet will be provided at Vendor's expense.

6.46 **MOBILIZATION**- This item shall include all costs of mobilizing staff and equipment from their duty station to the site for the required work. All staff time and vehicle expense must be included within this category where this term is used within the bid sheets. This item will be bid on a per mob basis.

6.47 **MONTHLY MAINTENANCE AND MONITORING**- Items under this category must account for all work required as stated in the approved RDP and any site-specific information.

6.48 **MW TO SVE CONVERSION**- This item must include all labor, equipment, and materials required to convert the wellhead of each monitoring well to an SVE well. The configuration of the SVE wellhead is shown in EXHIBIT 1.

6.49 **NRTL CERTIFICATION-** This line item includes costs to obtain certification of the remedial system by a National Recognized Testing Laboratory (NRTL). The required certification is to ensure that the electrical panel, electrical system,

and remedial trailer components meet NEC Class I Division II requirements and to ensure that the remedial trailer is designed and constructed in a manner that facilitates safe operation. All trailer certifications must be shop certified. Field certification of the panel only is not allowed. For more information on NRTL certification visit www.osha.gov/dts/otpca/**nrtl**/. This item will be bid as a lump sum. KDHE will not reimburse costs for remedial systems that were designed as NRTL certified trailers and are not NRTL certified.

6.50 **NON-CONTAMINATED SOIL AND STOCKPILE-** This line item includes all costs associated with excavating clean soil and stockpiling soil on site for reuse. This line item will be bid per cubic yard (in-situ).

6.51 **NON-CONTAMINATED SOIL PLACEMENT AND COMPACTION-** This line item includes all costs associated with replacing and compacting clean excavated soil. This line item will be bid per cubic yard (in-situ).

6.52 **OFF-GAS TREATMENT SYSTEM**- The off-gas treatment system must meet the specifications provided within the design contained in EXHIBIT 1. This must include the cost of equipment purchase and repair or replacement of the off-gas treatment system or other components of the off-gas treatment system upon failure for a period of two years after start-up.

6.53 **ON-SITE SUPERVISION**- The on-site supervision must ensure that the remedial system is installed as designed. This category must include the Project Engineer and all other staff who will provide labor and oversight during the implementation of the project. Provide the titles of the individuals who will perform the duties. This item is bid on an hourly basis. Project Engineer must oversee all aspects of the installation.

6.54 **PER DIEM**- This item covers lodging and expenses and is bid on a per day basis. Per Diem will be approved only for each night an employee is required to remain overnight for project work.

6.55 **PERMITS AND EASEMENTS**- This item includes all labor, mobilization, equipment, supplies, and other costs necessary to obtain all the listed permits and easements to construct and operate the remedial system.

6.56 **PIPE, PVC-** This line item will include costs for providing PVC pipe of the indicated diameter and thickness as specified in the RDP. This line item will be bid on a per foot basis.

6.57 **PRIVACY FENCE-** This line item shall include all costs associated with providing the privacy fence for the remedial trailer as specified in the Remedial Design Plan contained in Exhibit 1. This line item will be bid as a lump sum.

6.58 **PRODUCT DISPOSAL**- This item shall include all labor, equipment, and supply costs that are necessary to handle and dispose of separate phase petroleum product generated during remedial activities. All applied methods must comply with local, state, and federal laws.

6.59 **PROJECT ENGINEER**- This is the person designated by Vendor to oversee the implementation of the SRP. The minimum qualifications for this position are:

1) Currently a licensed Professional Engineer in the State of Kansas.
2) Has successfully implemented a minimum of five remedial systems that are similar to the type(s) specified in this SRP, and they are or have been successful in remediating the contamination.

The Project Engineer will be on site during start-up.

6.60 **PROJECT GEOLOGIST**- This position is either the designated site representative for Vendor, or the designated supervisor of Vendor's Field Geologist(s). This item shall be bid on an hourly basis. The Project Geologist for the project must be a Licensed Geologist in the State of Kansas and meet all minimum qualifications of a Field Geologist. This position is responsible for the preparation and certification of all geological information in reports and maps.

6.61 **PROPERTY RESTORATION**- This item includes all costs of restoring the site to conditions prior to installation of the remedial system, including re-seeding, installing sod, grading, and other required restoration. This work may require a Landscaping Professional.

6.62 **PUBLIC MEETING/NOTIFICATION**- This includes all costs necessary to organize a public meeting including advertising, local notification, and room rental (if necessary) prior to system start-up.

6.63 **QUARTERLY REPORT**- Includes all the staff time and supplies required to prepare the QMR defined in Section 4.4.5-QMR's.

6.64 **REMEDIAL EQUIPMENT ENCLOSURE**- This line item includes all costs related to supplying the remedial system and enclosure shown in EXHIBIT 1. This includes NRTL certification and transportation. Property taxes will be a separate reimbursable expense. Liability insurance will be the responsibility of Vendor during transportation. The remedial equipment enclosure must be set on the site in accordance with all applicable codes and regulations. All remedial system enclosures walls and ceilings will be insulated including plywood or similar covering for protection and support. This line item will be bid on a lump sum basis.

6.65 **REMEDIAL SCHEDULE/PLAN**- This item shall include all labor and equipment costs to properly complete and submit the Remedial Implementation

Schedule Worksheet. The deadlines and proposal submittals for the Remedial Schedule are included in SRP Section 4.0-Deliverables-Section 4.2 and 4.3 respectively.

6.66 **REMEDIAL SITE SURVEY**- The Remedial Site Survey will include information from the Full Site Survey in the RDP including building locations, parking lots, streets, property boundaries, pump islands, former and existing tank basins, and wells. New information will include the locations of the remedial system, trenches, top of casing and pad elevations, locations of all new SVE/AS/other remedial/monitoring wells, and information related to the remedial system. Well elevations and locations will be measured to within 0.01 ft. All other features and locations will be measured to within 0.1 ft. This survey will be conducted by a Kansas Registered Land Surveyor (RLS).

6.67 **REMEDIAL TRAILER, COMPLETE**- This line item includes all costs related to supplying the trailer-enclosed remedial system shown in EXHIBIT 1. This includes registration, securing title, licensing, NRTL certification and transportation. It is the responsibility of Vendor to ensure the O/O secures the title and tag for the trailer. Property taxes will be a separate reimbursable expense. Liability insurance will be the responsibility of Vendor while in tow. The remedial trailer must be set on the site in accordance with all applicable codes and regulations. All remedial trailer walls and ceilings are to be factory insulated including plywood or similar covering for protection and support. This line item will be bid on a lump sum basis.

6.68 **SAND/GRAVEL BACKFILL (SUPPLY)-** This line item includes all costs associated with supplying sand/gravel backfill as specified in the Remedial Design Plan. This line item will be bid per cubic yard (in-situ).

6.69 **SAND/GRAVEL BACKFILL (PLACE, COMPACT)-** This line item includes all costs associated with placing and compacting sand/gravel backfill as specified in the Remedial Design Plan. This line item will be bid per cubic yard (in-situ).

6.70 **SOIL SAMPLES**- This item shall include total cost associated with the collection and analysis of samples taken (i.e., labor, equipment, shipping, etc.). All samples shall be analyzed in accordance with the criteria provided in this document for the constituents outlined in the bid sheet. Provide the per sample cost for analysis of each constituent indicated.

6.71 **SOIL WASTE**- This item shall include costs for handling, treatment and disposal of all soil waste (both clean and contaminated) generated during trenching and drilling activities. Soil waste handling and treatment must comply with local, state, and federal laws. It is the responsibility of Vendor to secure a location for disposal of soil waste.

6.72 **SPREAD SOIL-** This line item includes all equipment, materials, and labor necessary to distribute the volume of contaminated soil listed in the Project Bid

Proposal Sheets in the land farm cell to the thickness indicated in the Remedial Design Plan specifications. This line item will be bid on a per cubic yard basis.

6.73 **SVE TEST WELL CONVERSION**- This line item includes all labor, materials, and equipment associated with connecting an existing soil vapor extraction pilot test well to the soil vapor extraction system. This line item will be bid on a per well basis.

6.74 **TECHNICIAN-** Vendor representative qualified to perform certain on-site activities as specified in the SRP RFP. Minimum qualifications are:

1) OSHA 40-Hour Hazardous Material training and annual 8-Hour Refreshers
2) Knowledge of EPA/KDHE sampling protocol
3) Experience in collecting groundwater samples for laboratory analysis from at least 30 monitoring wells.

6.75 **TRACTOR, ROTAVATOR AND OPERATOR-** This line item must include all mobilization, labor, materials, equipment mobilizations, and equipment associated with periodic tilling of land farmed soil with a rotary tiller. This line item will be bid on a per event basis.

6.76 **TRENCHING-** This line item includes all labor, equipment and materials (with the exception of the pipe) involved with installing underground equipment to the appropriate depths as specified in the SRP. This line item includes saw cutting of concrete/asphalt, removal and disposal of concrete/asphalt, soil excavation, pipe installation, backfilling and compaction and concrete/asphalt replacement.

6.77 **VENDOR**- This is any person (individual, partnership, association or corporation) who is seeking or is chosen to enter into a procurement contract with the O/O.

6.78 **WATER SAMPLES-** This line item shall include costs for water sampling materials (e.g. bailers, line, plastic sheeting, gloves, sample containers, etc.), water sample shipping, and analytical costs associated with groundwater samples. All samples shall be analyzed in accordance with the criteria provided in this document for the constituents outlined in the bid sheet. The Chain of Custody for each sampling event is required to be submitted with corresponding Request for Reimbursements. This line item will be bid on a per sample basis.

6.79 **WASTE WATER**- This item shall include all labor, equipment, and supply costs that are necessary to handle, treat (i.e. air stripping, carbon, etc.) and dispose of waste water generated. This only applies to waste water that requires treatment prior to discharge. All applied methods must comply with local, state, and federal laws.

6.80 **WELLS-** This line item shall include costs for labor, blank well casing, well screen, annular space gravel pack, annular seal, and grout for all wells installed. Do not include wellhead completion. This line item will be bid on a per foot basis. KDHE will not reimburse for improperly constructed wells or wells that cannot be used for the intended purpose.

6.81 **WELL COMPLETION**- This item shall include the cost for a well pad, flush or stick up protective locking cover, well development, and well tagging for all wells. All wells must be completed in accordance with regulations and KDHE guidelines. All wells must be developed to the extent that each well can be fully used for their intended purpose. This cost shall be bid on a per well basis.

6.82 **WELL GAUGING-** This line item includes costs to access monitoring wells, measure depth to free product and /or groundwater and total depth of the well, record data, and re-secure well cover. During system start-up activities, this will include all SVE, air sparge, and monitoring wells. During monthly activities, this will include the two designated up-gradient and down gradient monitoring wells that are used to estimate water levels in remedial wells. During quarterly activities, this line item is for monitoring wells from which water samples cannot be collected. This line item will be bid on a per well basis.

6.83 **WELL PLUGGING**- This item shall include all labor, equipment, and materials necessary to plug wells, sizes specified per line item, in accordance with KAR 28-30-7(d) included as ATTACHMENT G or current KDHE-approved procedures. This item will be reimbursed on the actual footage plugged.

6.84 **WELLHEAD PRESSURE PORT-** This line item includes the purchase and installation of well head threaded plugs with quick connects from which air sparge pressure readings can be collected with a digital manometer. This item will be bid on a per each basis.

ATTACHMENT A

OWNER/OPERATOR STANDARD CONTRACT

CONTRACT

This **CONTRACT** is entered into between _____ hereinafter referred to as the Owner/Operator; and _____ hereinafter referred to as the Vendor.

WHEREAS, the Owner/Operator is in need of Storage Tank consulting and testing services at KDHE project name_____, KDHE project code ____-_____-_____, site address_____, the Owner/Operator has requested bids from qualified firms to provide said services, and the Vendor is qualified to provide the required services, the Owner/Operator and Vendor agree as follows:

1. The Vendor shall perform all services called for under the Request for Proposal (RFP) in accordance with the specifications called for in said RFP.
2. The Owner/Operator shall compensate the Vendor for its services under the terms and conditions of said RFP in the amount of $_____, with payment to be made upon successful completion of the services required by the RFP which is incorporated herein.
3. It is expressly agreed that the terms of each and every provision in this Contract shall prevail and control over the terms of any other conflicting provision in any other document relating to the subject matter of this Contract or to which this Contract is attached.
4. This Contract shall be subject to, governed by, and construed according to the laws of the State of Kansas.
5. The Vendor shall comply with the Kansas Act Against Discrimination (K.S.A. 44-1001 et seq.) and the Kansas Age Discrimination in Employment Act (K.S.A. 44-1111 et seq.) and shall not discriminate against any person who performs work pursuant to this Contract, because of race, religion, color, sex, physical handicap unrelated to such person's ability to engage in this work, national origin or ancestry, or age.
6. This Contract shall not be considered accepted, approved or otherwise effective until the Owner/Operator receives the required insurance certificates.
7. By signing this Contract, the respective representatives of the Owner/Operator and Vendor hereby represent that they are duly authorized to execute this Contract on behalf of the party they represent and that their principal agrees to be bound by the provisions herein.
8. The Owner/Operator will not be responsible for, nor indemnify a Vendor for, any federal, state or local taxes that may be imposed or levied upon the subject matter of this Contract.

_____	_____
Owner/Operator	Date
_____	_____
Vendor	Date

ATTACHMENT B

CERTIFICATION OF COMPLETION

The following Certification of Completion is provided to satisfy the requirements outlined in Section 1.7 of the Final Remedial Report Outline and Section 3.4 of the SRP RFP REV. 10, 11/10 document.

Owner and/or Operator Certification

I, _____ hereby state and certify that, to the best of my knowledge and belief, the remedial design system has been implemented in accordance with the KDHE approved remedial design plan (RDP) and the remedial system installation is satisfactory to me.

_____ _____
(Signature) (Date)

_____ _____
(Printed Name) (Title)

Professional Engineer Certification

I certify that I have personally examined and am familiar with the engineering information presented in the KDHE approved RDP, equipment substitutions listed in Exhibit 2 Project Bid Proposal Sheets of the SRP document, project specification testing requirements, any and all modifications made during installation upon completion of a thorough inspection of the system. Based on my inquiry of those individual(s) responsible for the remedial system installation or those persons directly responsible for gathering installation verification testing results (e.g. soil compaction, air tightness piping, pipe survey, other testing requirements), the information submitted is to the best of my knowledge and belief, true, accurate, and complete. Therefore, I am satisfied that the installation of the remedial system at , Kansas has been performed in accordance with the KDHE approved RDP or have provided a complete list of discrepancies from the approved RDP implemented under my oversight. Attached are copies of remedial system verification testing results required by the approved RDP specifications.

_____ _____
(Signature) (Date)

_____
(Printed Name)

_____
(Kansas Professional Engineer License No.)

_____

_____
(Business Address) (Seal)

_____
(Telephone Number)

ATTACHMENT C

OFF-SITE ACCESS PAYMENT SCHEDULE

OFF-SITE ACCESS AGREEMENT
AND PAYMENT SCHEDULE

KDHE PROJECT NAME: _____

KDHE PROJECT CODE: _____

OWNER(S) OF PROPERTY: _____

ADDRESS OF PROPERTY: _____

The owner(s) of the above described property grant to _____ (owner/operator of KDHE project), the right and privilege to enter on the above described property for the purpose of conducting remedial activities which will include the following:

____	drilling and plugging of soil borings/groundwater survey probes;	___ X $	50.00	= $_____
____	drilling and construction of groundwater monitoring wells;	___ X $	250.00	= $_____
____	drilling and construction of groundwater reinjection wells, and any necessary piping;	___ X $	500.00	= $_____
____	installation of any necessary piping.	___ X $	100.00	= $_____

This property access agreement shall terminate upon the accomplishment of the above stated purpose(s).

All well completions will meet or exceed the KDHE Standard Monitoring Well Design; any changes to this design will require obtaining a variance from the appropriate local and state regulatory authority. Soil borings not completed as monitoring wells will be plugged in accordance with all state regulations and guidelines as outlined in K.A.R. 28-30-7(d) Article 30-Water Well Contractor's License: "Water Well Construction and Abandonment".
A compensation amount for a total of $_____ will be payable to the owner upon completion of the above stated activities and after the proper invoices have been submitted by the vendor. This amount will be eligible for reimbursement from the Petroleum Storage Tank Release Trust Fund (Trust Fund) administered by the KDHE. This compensation is being provided to alleviate any inconvenience to the property owner and to secure property access for the collection of groundwater and/or air samples from the wells for the duration of the project. Subsequent to all remedial activities, the property will be restored, as nearly as reasonably possible, to the condition it was in at the time this consent agreement was executed.

Upon completion of the project, a compensation amount of $100.00 per well for a total of $_____ will be payable to the owner to allow property access to properly abandon all wells installed during remedial activities. All wells will be plugged and abandoned in accordance with K.A.R. 28-30-7(d).

Prior to termination of this property access agreement, all materials and equipment shall be removed from the property and the property will be restored, as nearly as reasonably possible, to the condition it was in at the time this property access agreement was executed. Piping/lines will either be properly plugged and left in place, or will be removed from the property.

_____
Property Owner Signature Date

WITNESSES:

_____
Date

_____
Date

ATTACHMENT D

KDHE MONITORING WELL DESIGN

STANDARD MONITORING WELL DESIGN

WELL HEAD PROTECTOR
Steel or PVC cover with water tight cap, set in the concrete pad. Should be equipped with a locking device to prevent tampering. Cover should provide adequate space to allow access to the well.

CONCRETE PAD
Should be a minimum of 2'x2'x4" thick to secure the protective cover, prevent pooling of water and vegetative growth around the well, and allow for placement of a surveyor pin.

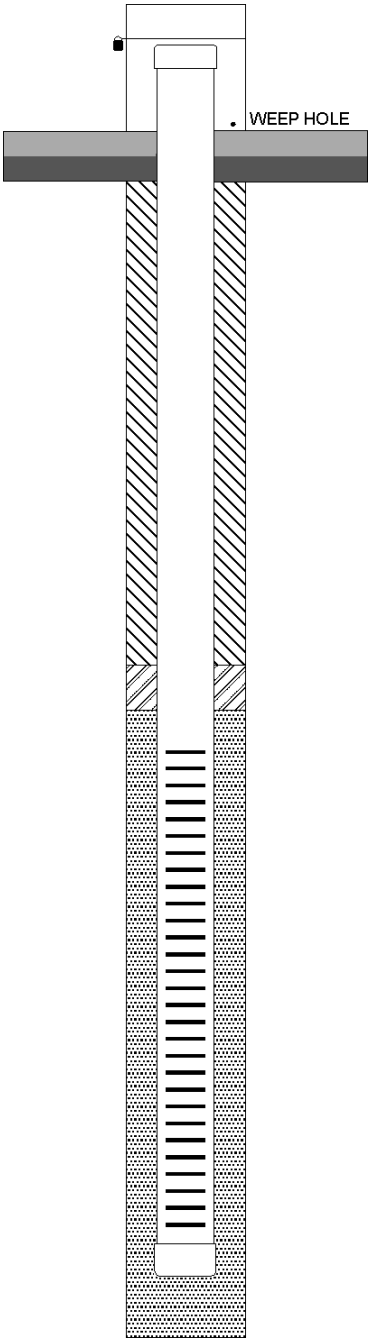

IMPERVIOUS GROUT
The upper 20' of the well must be grouted with impervious grout as required by K.A.R. 28-30-2k and 6b (see next page for quotes)

SCREEN SEAL
A 2' layer of bentonite chips or pellets should be placed on the gravel pack to prevent infiltration of grout into the gravel pack.

GRAVEL PACK
The gravel pack should be sized to prevent infiltration of fines into the well. The source of the gravel pack material should be carefully determined to eliminate the possibility of contamination of the well during construction.

WELL CASING
Well casing shall terminate not less than one foot above ground surface. The following well casings are acceptable for monitoring well use.
2" I.D. PVC schedule 40 or thicker
4" I.D. PVC SDR 26 or thicker
5" I.D. PVC SDR 26 or thicker
Steel casing shall be 10 gauge or thicker

All casing materials must be connected without use of solvents, glues, or materials which would induce contamination into the well.
Some other casings are approved for well construction but are not as commonly used.
All casing materials must be selected so that incompatibility problems do not occur.

SCREEN
Wells must be equipped with manufactured well screen which provides adequate communication with the aquifer to provide a representative sample without allowing the sediments to enter the well.

CONTRACTOR LICENSING
All monitoring wells must be constructed by a licensed water well contractor as specified under K.A.R. 28-30-3. (See next page for quotes)

K.A.R. 28-30-2 (k) Grout

Grout means cement grout, neat cement grout, bentonite clay grout or other material approved by the department used to create a permanent impervious watertight bond between the casing and the undisturbed formation surrounding the casing or between two or more strings of casing.

(1) "Neat cement grout" means a mixture consisting of one 94 # bag of portland cement to 5-6 gallons of clean water.

(2) "Cement grout" means a mixture consisting of one 94 # bag of portland cement to an equal volume of sand having a diameter no larger than 0.080 inches (2 millimeters) to 5-6 gallons of clean water.

(3) "Bentonite clay grout" means a mixture consisting of water and comercial grouting or plugging sodium bentonite clay containing high solids such as that manufactured under the trade name of "volclay grout", or an equivalent as approved by the department.

(A) The mixture shall be as per the manufacturer's recommendations to achieve a weight of not less than 9.4 pounds per gallon of mix. Weighing agents may be added as per the manufacturer's recommendations.

(B) Sodium bentonite Pellets, tablets or granular sodium bentonite may also be used provided they meet the specifications listed in K.A.R. 28-30-2(k), (3), above.

(C) Sodium bentonite products that contain low solids, are designed for drilling purposes or that contain organic polymers shall not be used.

K.A.R. 28-30-6 (b) Grouting

(1) Constructed or reconstructed wells shall be sealed by grouting the annular space between the casing and the well bore from ground level to a minimum of 20 feet or to a minimum of five feet into the first clay or shale layer, if present, whichever is greater. If a pitless well adapter or unit is being installed, the grouting shall start below the junction of the pitless well adapter or unit where it attaaches to the well casing and shall continue a minimum of 20 feet below this junction or to a minimum of five feet into the first clay or shale layer whichever is greater.

(2) To facilitate grouting, the grouted interval of the well bore shall be drilled to a minimum diameter at least three inches greater than the maximum outside diameter of the well casing. If a pitless well adapter or unit is being installed on the well's casing, the well bore shall be a minimum diameter of at least three inches greater than the junction diameter of the well casing through the grouted interval below the junction of the pitless well adapter or unit where it attaches to the well casing.

(c) If groundwater is encountered at a depth less than the minimum grouting requirement, the grouting requirement may be modified to meet local conditions if approved by the department.

K.A.R. 28-30-3 Licensing

(a) Eligibility. To be eligible for a water well contractor's license an applicant shall:

(1) Have passed an examination conducted by the department; or

(2) Meet the conditions contained in subsection (c).

(b) Application fees.

(1) Each application shall be accompanied by an application fee of $ 10.00.

(2) Before issuance of a water well contractor's license, each contractor shall pay a license fee of $ 100.00 plus $ 25.00 for each drill rig operated by or for the contractor. These fees shall accompany the application and shall be by bank draft, check or money order payable to the Kansas Departmetnt of Health and Environment- water well lincensure.

(c) Reciprocity.

(1) Upon receipt of an application and payment of the required fees from a nonresident, the secretary may issue a license, providing the nonresident holds a valid license from another state and meets the minimum requirements for licensing as prescribed in K.S.A. 82a-1207, and any amendments thereto.

(2) If the nonresident applicant is incorporated, evidence shall be submitted to the Department of Health and Environment showing that the applicant meets the registration requirements of Kansas Secratary of State.

(3) Nonresident fees for a license shall be equal to the fee charged a Kansas contractor by the applicant's state of residence but shall not be less than $ 100.00. The application fee and drill rig license fee shall be the same as the Kansas resident fees.

FLUSH-MOUNT WELL CONSTRUCTION DETAIL

(Not to Scale)

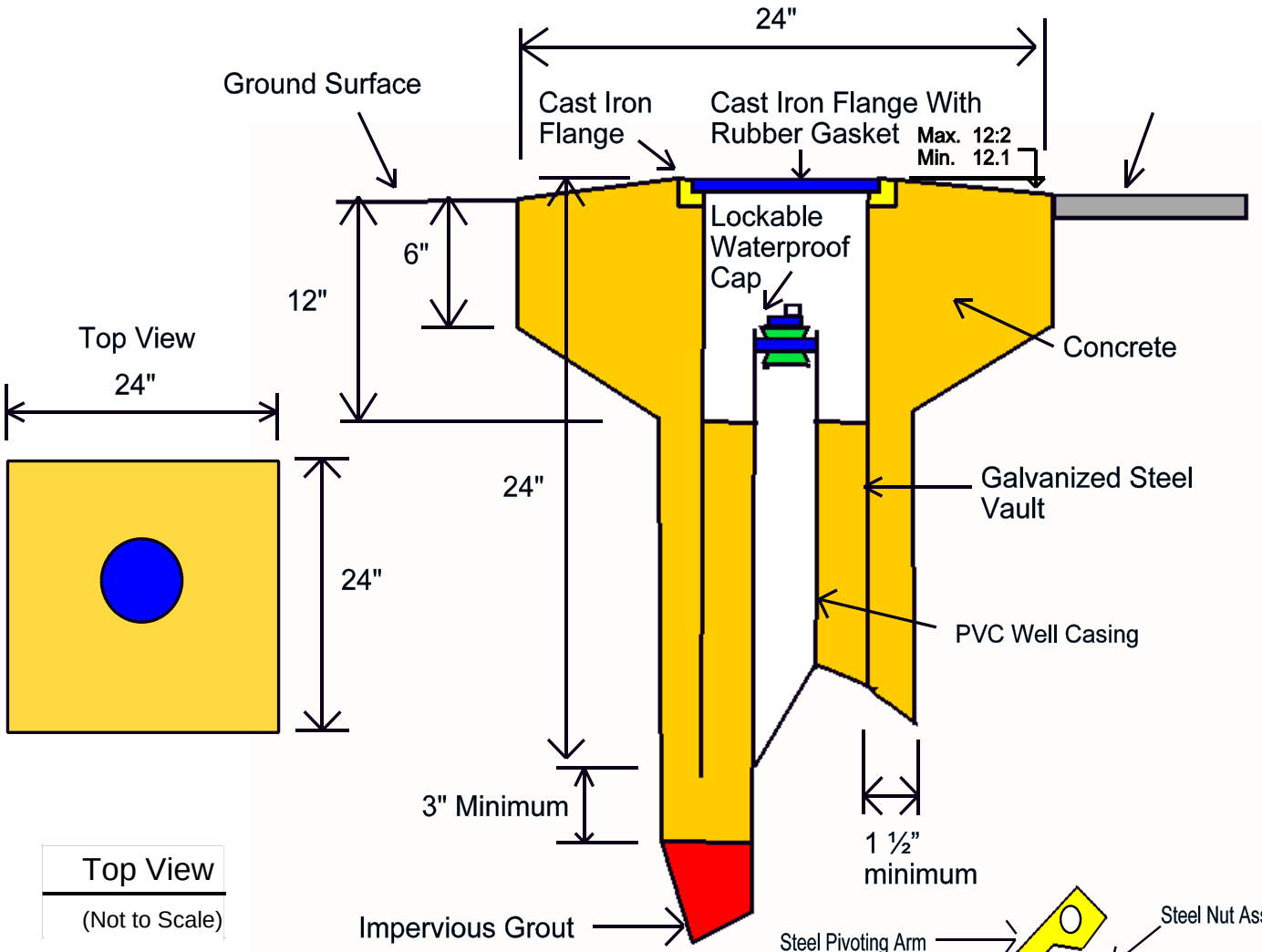

Top View

(Not to Scale)

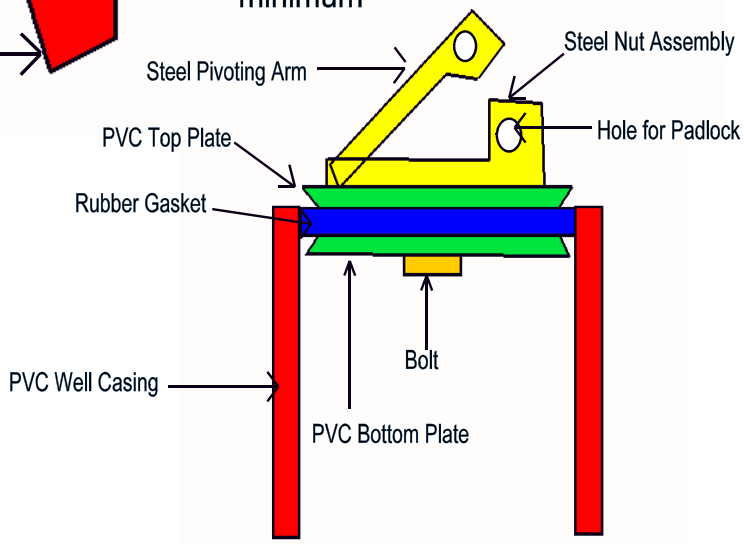

Casing	2"	4"
Vault	6"	9"
Concrete Pad	24" x 24"	24" x 24"

LOCKABLE WATERPROOF CAP

(Not to Scale)

MONITORING WELL DESIGN
ADDITIONAL INSTRUCTIONS

FLUSH-MOUNT WELL HEAD COMPLETION:

K.A.R. 28-30-6 (e) does not allow well casing to be terminated less than one foot above finished ground surface. Because storage tank site investigations are often conducted in areas where completing monitoring well heads above grade is not practical, consideration must be given to completing flush-mount monitoring well heads.

If monitoring well must be completed with a flush-mount well head design, a waiver of K.A.R. 28-30-6 (e) must be requested in writing. The procedures for requesting a waiver of this regulation are described as follows:

1) Prior to the monitoring well installation, the written request must be submitted to the address indicated below.

2) The request must contain the following information:

   a. facility name and street address
   b. legal description of the property where the wells are proposed to be located.
   c. number of wells to be installed with flush-mount well heads
   d. reason(s) why the regulation should be waived
   e. approximate depth to groundwater in the local area
   f. the general geology or lithologies expected to be encountered in drilling
   g. specifications and/or diagrams of the vault proposed to be installed including the manufacturer's name and any other descriptive information such as a manufacturer's trade sheet.

3) Wait for approval of the waiver request before completing monitoring wells.

4) When waivers are approved and monitoring wells are installed with a flush-mount wellhead design, the well head completion must be indicated accordingly in the lithologic section of the WWC-5 water well record form. The name of the KDHE contact person that approved the waiver must also be provided in the lithologic section of the WWC-5 form.

Any waiver of regulations applies only to the wells and information indicated in the written request. A verbal request for waiver of regulations may be approved on any additional wells needed for the same area or site. The verbal request must be directed to the phone number below.

MONITORING WELL GROUTING REQUIREMENTS:

K.A.R. 28-30-6, part (b) requires that constructed or reconstructed wells be sealed by grouting the annular space between the casing and the well bore from ground level to a minimum of 20 feet or to a minimum of five feet into the first clay layer, whichever is greater. Part (c) of the same regulation specifies if groundwater is encountered at a depth less than the minimum grouting requirement, the grouting requirement may be modified to meet local conditions if approved by the department. A waiver of K.A.R. 28-30-6(b) must be obtained following the same procedures as described for flush-mount well heads above.

Submit requests for waivers and direct any questions on well design regulations to:

Kansas Department of Health & Environment
Bureau of Water, Geology Section
1000 SW Jackson, Suite 420
Topeka, Kansas 66612-1367
Phone: (785)296-5522

ATTACHMENT E

KDHE WELL TAGGING PROCEDURE

INSTRUCTIONS FOR THE KDHE/BER WELL TAG FORM

A KDHE/BER well tag record must be developed for all wells installed or/and monitored at Leaking Underground/Aboveground Storage Tank sites (including existing private or public wells). The well tag record is used to uniquely identify individual sampling points at LUST/LAST (and other) projects. To establish a well tag record, a KDHE/BER Well Tag form must be completed and a numbered tag must be permanently affixed to the well, then the form is to be returned to KDHE. Specific instructions (and exceptions) for completing the KDHE/BER Well Tag form and affixing the tag are described below.

Part 1: KDHE/BER Well Tag Form

1) A separate KDHE/BER Well Tag form must be completed for each KDHE project code.

2) No two well tag numbers are the same. EACH MONITORING WELL INSTALLED MUST HAVE A UNIQUE WELL TAG NUMBER ATTACHED, additionally, GROUPS OF WELLS MAY BE ASSIGNED THE SAME PROJECT CODE.

3) If any existing well has already been tagged (and the tag is readable), do not tag the well again. Also see the "Caution" statement in the tag installation notes on affixing tags to existing wells.

4) Write the well tag number in the upper margin near the right edge of the Water Well Record form (form WWC-5) for each monitoring well installed at a LUST/LAST site.

5) The form must be completed according to the instructions herein. Failure to submit the forms or submitting inaccurate data could restrict or delay reimbursement for work completed. The forms must be completed and submitted to the address below within two weeks after tagging the well. Copies of the KDHE/BER Well Tag forms must be included in the appropriate appendix of the final report. Any unused well tags must be returned to the address below.

Kansas Department of Health & Environment
Bureau of Environmental Remediation
1000 SW Jackson, Suite 410
Topeka, KS 66612-1367

Part II: Affixing the Tag to a Well

The tag is made of brass and measures approximately 0.75 X 2.5 X 0.02 inches. It can be easily molded to the shape of the surface to which it will be affixed. The method of installing the tag will depend on how a well head was completed. Note the tags are provided, however, installation hardware must be supplied by the contractor. Acceptable methods of tag installation are discussed as follows:

1) Above-grade well head completion: For monitoring wells that have casing terminating above grade with exterior steel or PVC well head protector (standard monitoring well design), the well tag is to be installed on the exterior of the protective cover approximately 3.0 inches below the hasp used in locking the protective cover cap. The tag must be secured to the protective cover by means of two one-way metal screws or pop-rivets. Do not use adhesives to affix the tag to the protective cover.

2) Flush-mounted monitoring well heads: Since flush-mount manholes vary in design, there is not an entirely standard method for affixing the well tag, but, the tag must be installed inside the manhole in an area and manner leaving the tag readily visible and accessible. The tag may be affixed to the inside of the manhole cover or anchored by some means to the concrete inside the manhole. Do not use adhesives to affix the tag.

3) Private or public wells: The method for affixing a tag to a private or public water well must be determined according to the specific well head design, which will vary. Keep in mind the tag must remain visible and accessible after it is permanently affixed to the well. Common methods of affixing tags to these types of wells are anchoring the tag to the concrete pad at the base of the well, attaching the tag to the well house, or wiring the tag to the well casing. Remember to obtain permission prior to sampling or tagging private or public wells.

Notes on tag installation:

CAUTION! State regulations prohibit perforation of a well casing. See K.A.R. 28-30-6(e) as stated below.

K.A.R. 28-30-6(e) provides in part: "...No opening shall be made through the well casing except for the installation of a pitless adapter so designed and fabricated to prevent soil, subsurface and surface water from entering the well."

A. Remember, the tag must be visible and must remain permanently affixed to the well sampled as part of the investigation.

B. When affixing a tag to any well that does not have a protective casing installed, state regulations will not allow any holes to be drilled into an existing well casing. An alternative method for affixing the tag must be used.

C. Prior to sampling or tagging any private or public water supply well, specific permission must be obtained form the appropriate authority.

D. If there are any questions on installing the tag or completing the KDHE/BER Well Tag form, contact the KDHE project manager.

State of Kansas
KDHE/BER Well Tag Form

KDHE Project Code: | | | - | | | | - | | | | | |

Well Tag Number	Well Number

After completing this form, photocopy it and keep the copy for your files. Send the original to the address below.

Kansas Department of Health & Environment
Bureau of Environmental Remediation
1000 SW Jackson, Suite 410
Topeka, KS 66612-1367

ATTACHMENT F

REMEDIAL IMPLEMENTATION SCHEDULE WORKSHEET

PETROLEUM STORAGE TANK RELEASE TRUST FUND
REMEDIAL IMPLEMENTATION SCHEDULE WORKSHEET

Site Name: _____ **KDHE Project Code:** _____

Consulting Firm: _____ **Consultant Contact:** _____

INSTRUCTIONS: This form must be completed by providing the information requested below; complete only the sections applicable to actual work that will be conducted. Do not include any attachments with the worksheet other than those described herein.

I. Site Information

A) Site Address:_____,_____,_____
Street **City, Zip** **County**

B) Legal Description:_____1/4_____1/4_____1/4 Section_____, Township_____South, Range_____East/West
(Circle One)

II. Equipment, Methods, and Staff

A) Drilling: Drilling: If only one type of drilling method is to be used, complete only column "A", if more than one type of drilling method is proposed, complete both columns "A" and "B".

		A	B
Drill Rig:	Brand/Model	_____	_____
	Torque Rating	_____	_____
Drill String:	Type (Augers, etc.)	_____	_____
	O.D./I.D.	_____	_____
Borehole size:		_____	_____
Sample Collection Equipment		_____	_____
Drilling Sample Frequency		_____	_____

B) Field Screening:
Field Screening Intervals _____
Device (Brand/Type/Specs) _____
Calib. Standard & Frequency _____

C) Well Development:
Method (bailer, pump, etc.) _____
Minimum well volume to be withdrawn (Drilling Scenario A) _____
Minimum well volume to be withdrawn (Drilling Scenario B) _____

D) Laboratory Analytical:
Soil Samples: Collection Equipment _____
Analytical Methods _____
Water Samples: Collection Equipment _____
Analytical Methods _____

E) Waste Handling Procedures: Briefly describe how soil and water waste generated during drilling, development and sampling activities will be handled, treated, and disposed:
Soil: _____
Water: _____

F) Decontamination: Briefly describe decontamination equipment, methods, and procedures to be employed.
_____
_____
_____
_____

G) Field Personnel:

List below the consultant's personnel and any subcontracting firms that will be involved in the field work. Indicate each individual's name, company, position title, and general duties. If resumes documenting education, experience, and safety training certification have not been provided with the original bid package for all those listed, submit the information with this worksheet. Attach additional sheets if necessary.

Name	Company	Position	Title	Duties

III. Well Completion Information

Provide the following information for each well type to be installed (attach additional sheets if necessary).

Well Type	**SVE**	**Air Sparge**	**Monitoring**	**Other (list)**
Total Well Depth				
Casing/Screen Size and Material				
Screen Slot size				
Screened Interval (depths)				
Grout Material				
Filter Pack Material and Size				
Drilling Scenario (A or B)				

IV. Schedule of Activities

A. Date the contract with the owner or operator was signed._____

B. Public meeting/notification date:_____ Time: _____

Location: _____

City Contact Person: _____ Phone: _____

C. Drilling to commence and conclude. Initiation date_____Completion date_____

D. Trenching and line installation. Initiation date _____Completion date _____

E. Equipment and structure installation schedule

Equipment Description	Initiation Date	Completion Date

F. Proposed start-up date: _____

G. Date system will be fully operational: _____

ATTACHMENT G

SOIL BORING PLUGGING CRITERIA

ARTICLE 30 – WATER WELL CONTRACTORS LICENSE; WATER WELL CONSTRUCTION AND ABANDONMENT

This article regulates the construction, reconstruction, treatment and plugging of water wells and sets forth procedures for the licensing of water well contractors as required by K.S.A. 82a-1201 to 82a-1215 and amendments thereto.

Kansas Administrative Regulation (K.A.R.) 28-30-7(d)(2)(A) states,

"The entire hole shall be plugged with an approved grouting material from bottom of the hole, up to within three feet of the ground surface, using a grout tremie pipe or similar method."

Refer to K.A.R. 28-30-2(k) and (t) for definitions of grout and tremie pipe.

WELL PLUGGING/ABANDONMENT REQUIREMENTS

The following requirements supplement section K.A.R. 28-30-7(d)(2)(A) of Article 30.

A) The following requirements will be mandatory for plugging monitoring wells that have **20 feet or greater of grout (including the bentonite plug)**:

1) The well head, concrete pad and protective cover (if above grade completion) must be removed.
2) The well must be filled with an approved plugging material. After the casing or casing void has been filled with an approved plugging material, the casing shall be cut off to a level three (3) feet below ground surface. The remaining excavation may then be backfilled with native soils.
3) The property will be restored as near to the original condition subsequent to plugging.

B) The following requirements will be mandatory for plugging monitoring wells that have **less than 20 feet of grout (including the bentonite plug) and was given an approved waiver request for the original installation of the monitoring well by the Bureau of Water, Kansas Department of Health and Environment**:

1) The well head, concrete pad and protective cover (if above grade completion) must be removed.
2) The well must be filled with an approved plugging material. After the casing or casing void has been filled with an approved plugging material, the casing shall be cut off to a level three (3) feet below ground surface. The remaining excavation may then be backfilled with native soils.
3) The property will be restored as near to the original condition subsequent to plugging.

ATTACHMENT H

DOMESTIC WELL CONTACT FORM

DOMESTIC WELL CONTACT FORM

DATE: _____

SITE NAME: _____

KDHE SITE CODE: _____

CONSULTANT: _____

PROJECT MANAGER: _____

Form must be included in the first monitoring report
and faxed or e-mailed to Mr. Brett Tavener at:
btavener@kdheks.gov
Fax: (785) 296-6190

Well I.D.	Well Owner's Name	Well Owner's Address# (including zip)	Well Owner's Phone Number	Well Usage*	Treatment**	Direction from Plume

* Describe the well usage (lawn and garden watering, drinking water, other, etc.)
** Describe treatment if any on the well (reverse osmosis, carbon vessels,U.V., etc.)
# If physical address is different than the owners mailing address, please use another line to provide both the mailing address and physical address.

Note: Form is to be filled out each time the contact information for a domestic well has changed. The form is to be forwarded to the KDHE project manager if changes are made.

ATTACHMENT I

QMR and MONTHLY MONITORING REPORT EXAMPLES

Petroleum Storage Tank Release Fund
Quarterly Monitoring Report

Facility Name:_____

Facility Address:_____

Vendor:_____

Reporting Period:_____ through_____

Days in Reporting Period:_____

KDHE Project Code:_____

KDHE Project Manager:_____

Vendor Project Manager:_____

Number of Days System Not Operating:_____

Section 1 - Summary of Remedial Action

Groundwater (check/complete all that apply):

_____ Pump & Treat:

_____ Total Fluids Pumps (Electric) _____ Dual Phase Pumps (Electric)
_____ Total Fluids Pumps (Pneumatic) _____ Dual Phase Pumps (Pneumatic)
_____ With Off-gas Treatment _____ Without Off-gas Treatment

Water Treatment System:

_____ Granular Activated Carbon _____ Air Stripper Tower
_____ Other (Specify) _____ Tray Stripper

_____ Air Sparge System:

Recovery Trench(es): yes or no (circle one) Length, Width, Depth (ft) _____
Number of Groundwater Recovery Wells: _____ Number of Air Sparge Wells: _____

_____ Public Water Supply (PWS) Treatment System:

_____ Granular Activated Carbon _____ Air Stripper Tower
_____ Other (Specify) _____ Tray Stripper

Startup Dates:

_____ GW Pump & Treat _____ PWS Treatment System
_____ Air Sparge System _____ Off-gas Treatment

Disposal Method of Treated Water:

_____ Sanitary Sewer _____ Reinjection
_____ NPDES _____ Other (Specify)

Soil (check/complete all that apply):

_____ Soil Vapor Extraction (SVE) System:

_____ With Off-gas Treatment _____ Without Off-gas Treatment
Number of SVE Wells: _____

Startup Dates:

_____ SVE System _____ Off-gas Treatment

COMMENTS: _____

Section 1 (continued) - Summary of Remedial Action

Major Equipment on Site (if applicable):

	Brand/Model	Type	Capacity	Warranty Expiration Date
Skimmer Pumps:				
Groundwater Pumps:				
Pre-treatment/Filter:				
Air Stripper:				
Transfer Pumps:				
Air Compressor:				
SVE Vacuum Pump:				
Air Sparge Blower Pump:				
Oil/H2O Separator:				
Knockout Tank:				
Vapor Phase Carbon:				
Water Phase Carbon:				
PWS Treatment Equipment:				
Telemetry:				
Off-gas Treatment Equipment:				

Enclosure Type: Building _____ Skid _____ Fence _____
Other: _____

Section 2 - Groundwater/Soil Vapor Extraction/Air Sparge Information

	GPM		
Design Flow Rate for Groundwater Extraction System:		Pump Operation:	
Actual Average Flow Rate During 1st Month of Operation:		Continuous	
Actual Average System Pumping Rate Since Startup:		Cycling	
Quarterly Average Pumping Rate:			
Design Flow Rate for Soil Vapor Extraction System:		Blower Operation:	
Actual Average Flow Rate During 1st Month of Operation:		Continuous	
Actual Average System Pumping Rate Since Startup:		Cycling	
Quarterly Average Pumping Rate:			
Design Flow Rate for Air Sparge System:		Blower Operation:	
Actual Average Flow Rate During 1st Month of Operation:		Continuous	
Actual Average System Pumping Rate Since Startup:		Cycling	
Quarterly Average Pumping Rate:			

Facility Name:_____ Quarterly Monitoring Report
KDHE Project #:_____

Section 3 - System Down Time Summary (Current Reporting Period Only)		
Dates		Explanation for Down Time (Indicate Corrective Measures Taken)
From	To	

Section 4 - History of Major Maintenance/Repair Activities Since Start-up		
Date of Maintenance/Repair	Description of Work Performed	Performed By:

Section 5 - History of Air Stripper/Granular Activated Carbon Changes Since Start-up		
Date of Maintenance/Repair	Description of Work Performed	Performed By:

Section 6 - Well Inventory Table (Onsite and Offsite Wells)				
Well Number	Date Installed	Diameter (inches)	Screened Interval (ft)	Total Depth (ft)

Facility Name:_____
KDHE Project #:_____

Quarterly Monitoring Report

Section 7 - Groundwater Elevations								
Date	**Well Number**	**KDHE Well Number**	**Casing Elevation (units)**	**Water Level (ft bls)**	**Groundwater Elevation**	**Free Product Thickness (ft)**	**Free Product Elevation (units)**	**Total Depth (ft bls)**

Facility Name:_____ Quarterly Monitoring Report
KDHE Project #:_____

Section 8 - Free Product Information

Is Free Product Present at the Site? Yes _____ No _____
If Yes, when was free product discovered at the site?

Recovery Method	This Quarter (Gallons)	Year to Date (Gallons)	Inception to Date (Gallons)
Passive			
Bailing			
Automated			
Other (Dewatering, excavation, etc.)			
Total Free Product recovered:			

Indicate Significant Recovery Events:_____

Free Product Gauged (Feet)

Year							
Well Number							
Diameter (inches)							
January							
February							
March							
April							
May							
June							
July							
August							
September							
October							
November							
December							

Summary of Free Product Recovery (total gallons including all methods) - Cummulative By Year

Year	Total Volume Recovered
Total (Gallons)	

Facility Name:_____
KDHE Project #:_____

Quarterly Monitoring Report

Section 9 - Groundwater Operational Parameters						
Date	Meter Reading (Previous)	Meter Reading (Current)	Total Flow (Gallons)	Days in Period (Days)	Gallons per Minute (GPM)	Total Flow to Date (Gallons)

Facility Name:_____
KDHE Project #:_____

Quarterly Monitoring Report

Section 10 - Monitoring Well Laboratory Analytical Data

Date	Constituent	Benzene	Toluene	Ethylbenzene	Xylenes	Total BTEX	1,2-DCA	MtBE	Naphthalene	EDB	Lead (filtered)	Lead (unfiltered)	Volume Purged (Gallons)
	Lab Method												
	Detection Limit												
	Kansas Risk #												
	Well Number												

If the constituent concentration is less than the detection limit, a < symbol followed by the detection limit should be used.
All concentrations should be in parts per billion (ppb).

Section 11 - Air Sparge Well Information					
Record of water level (feet) in the monitoring wells measured monthly.					
Well Number	Date	Date	Date	Date	Date

Section 12 - Groundwater Trends
Indicate below any patters/trends in groundwater fluctuations and discuss hydrologic features that may contribute to such fluctuations (i.e., irrigation ditches, ponds, wells, etc.)

Facility Name:_____ Quarterly Monitoring Report
KDHE Project #:_____

Section 13 - SVE Unit Field and Laboratory Analytical Results

SVE Unit:_____

Date		Benzene	Toluene	Ethylbenzene	Xylene	BTEX	TPH	O2 Readings (mg/m^3)	CO2 Readings (mg/m^3)	SVE Effluent Readings (ppm)
	Method									
	Detection Limit									

Units are parts per million by volume (ppm_v) unless otherwise noted.

Facility Name:_____ Quarterly Monitoring Report
KDHE Project #:_____

Section 14 - SVE Well Field and Laboratory Analytical Results

SVE Well:_____

Date		Benzene	Toluene	Ethylbenzene	Xylene	BTEX	TPH	O2 Readings (mg/m^3)	CO2 Readings (mg/m^3)	SVE Effluent Readings
	Method									
	Detection Limit									

Units are parts per million by volume (ppm_v) unless otherwise noted.

Facility Name:_____ Quarterly Monitoring Report
KDHE Project #:_____

Section 15 - Air Sparge Wells/System Operation

AS Well:_____

					Operation Time	
Parameter	Pressure	Wellhead Pressure	Flow Rate	Dilution Air	Continuous	Cycling
Date	(psi)	(psi)	(scfm)	(% Open)	(Hours)	(Hours)

Complete AS System (if applicable):_____

					Operation Time	
Parameter	Pressure	Wellhead Pressure	Flow Rate	Dilution Air	Continuous	Cycling
Date	(psi)	(psi)	(scfm)	(% Open)	(Hours)	(Hours)

Facility Name:_____
KDHE Project #:_____

Quarterly Monitoring Report

Section 16 - SVE Well/Unit Vacuum Extraction Flow Rates & Totalizer/Analyzer Readings

Date						
Well #/Unit #						
SVE Manifold Vacuum ("H2O)						
SVE Wellhead Vacuum ("H2O)						
SVE Direct Read Flow Rate (scfm)						
Total System Vacuum ("H2O)						
Before Filter ("H2O)						
After Filter ("H2O)						
Knockout Tank ("H2O)						
Knockout Totalizer (gallons)						
Flow Analyzer (scfm)						
Dilution Air (% Open)						

Section 17 - Operation, Maintenance, and Monitoring Costs vs. Time

Date			
Quarter Cost			
Cummulative Cost			

Please also provide a chart of OM&M Costs (in dollars) versus the Date (Quarter and Cummulative Cost).

Section 18 - Permits & Applications

Permit/Application Type	Permit/Application Number	Original Application Date	Renewal Date
KDOT Right of Way			
NPDES (BOW)			
Groundwater Withdrawal (DWR)			
Construction			
Electrical			
Easements			
Class V Injection Well (BOW)			
Air			
Other			

Facility Name:_____
KDHE Project #:_____

Quarterly Monitoring Report

Section 19 - System Operation Time (hours)

Date	SVE A	SVE B	SVE C	AS A	AS B	AS C	Off-gas unit
Total Potential Operational Hours for Quarter							
Total Actual Operational Hours for Quarter							
Percent Operational							
Total Operational Hours for Year							

Section 20 - SVE Off-gas Treatment Operation

				Dilution Valve Position	
Date	Inlet Temperature (ºF)	Discharge Temperature (ºF)	Flow Rate (scfm)	Manual (% Open)	Automatic (% Open)

	Sampling			
	Inlet		Discharge	
	PID/HNU	Analytical	PID/HNU	Analytical
Date	(ppm_v)	(ppm_v)	(ppm_v)	(ppm_v)

PETROLEUM STORAGE TANK RELEASE FUND
MONTHLY OPERATION MONITORING & MAINTENANCE REPORT

Facility Name: _____
Facility Address: _____
Consultant: _____
Reporting Period: _____ thru _____
Days in Reporting Period: _____

KDHE Project Code: _____
KDHE Project Mgr.: _____
Inspector: _____
Inspection Date: _____
Inspection Time: _____

GROUNDWATER/VAPOR EXTRACTION/INJECTION INFORMATION

Design Flow Rate for Groundwater Extraction System:	NA	GPM		
Reporting Period Pumping Rate:	NA	GPM		
Pump Operation:	NA	Continual		Cycling
Design Parameters for Vapor Extraction System:		SCFM		"H20
Reporting Period Parameters:		SCFM		"H20
Blower Operation:		Continual		Cycling
Hour Meter Reading:		Previous		Present
Design Parameters for Air Sparge System:		SCFM		PSI
Reporting Period Parameters:		SCFM		PSI
Blower Operation:		Continual		Cycling
Hour Meter Reading:		Previous		Present

SYSTEM DOWN TIME SUMMARY

Dates		Explanation for Down Time (Indicate Corrective Measures Taken)
From	To	

REMEDIATION SYSTEM(S) MAINTENANCE RECORD

Date of Changes	Description of Work Performed	Performed by:

GROUNDWATER ELEVATIONS*

Well I.D. No.	KDHE Site I.D.	TOC Elevation	Depth to Water (TOC)	Water Level Elevation	Free Phase Prod. Elev.	Free Phase Prod. Thick.

* Measure the static water level (SWL) consistently from one monitoring well inside & one outside affected remedial area.

SVE UNIT FIELD DATA

SVE UNIT	Vac. ("H20)	Anenometer (fpm) /Flowrate (scfm)	Diff. Pres. ("H2O) /Flowrate (scfm)	Direct Read Flowrate (scfm)	Dilution Valve % Open	Pre/Post-Filter Vacuum ("H20)	O2 Readings (mg/m^3)	CO2 Readings (mg/l)	Field Readings (ppm)
Pre-adj.									
Post-adj.									

SVE WELL FIELD DATA

SVE WELL	Vac. @ Manifold ("H2O)	Anenometer (fpm) /Flowrate (scfm)	Diff. Pres. ("H2O) /Flowrate (scfm)	Direct Read Flowrate (scfm)	Vac. @ Wellhead ("H2O)	Pres. @ Wellhead? ("H2O)	O2 Readings (mg/m^3)	CO2 Readings (mg/l)	Field Readings (ppm)

AIR SPARGE UNIT FIELD DATA

Air Sparge UNIT	Pressure (psi)	Flow Rate (scfm)	Bleed Off % Open	Sparge Air Temp.
Pre-adj.				
Post-adj.				

AIR SPARGE WELL FIELD DATA

Air Sparge Well	Pres. @ Manifold /Pres. @ Wellhead (psi)	Direct Read Flowrate (scfm)	Operation Time	
			Continual (Hours)	Cycling (Hours)

Notes/Comments:

ATTACHMENT J

FINAL REMEDIAL REPORT OUTLINE

ATTACHMENT J

Cover Page: The report shall include a cover page with the following information: report title; site name; site address; KDHE project code; section, township, and range to four quarters; report date and the name of the person who prepared the report. Report must be stamped, dated, and signed by the Project Engineer and the Project Geologist as per KAR-66-6-1 et seq.

Table of Contents: The report shall include a table of contents with the following information: 1) section titles and page numbers of all sections; 2) tables and page numbers; and 3) a list of each Drawing, Figure, and Appendix.

The report shall include a labeled tab for each of the Section Titles and each Appendix.

SECTION 1.0-DISCUSSION-

This discussion should be as concise and brief as possible. Use the Section titles and subtitles provided, and number each page. Do not reference or include in this section, any tables, maps, photographs, drilling logs, or other documents that will be included in this report.

1.1 Report Summary

1) Provide a brief summary of the report contents.

2) Provide a brief summary of work conducted during the implementation process.

3) Describe all permits required and obtained for implementing the SRP.

1.2 Discussion of Contamination

1) Discuss and compare the results of all laboratory analyses collected to date. Include current and past analyses.

2) Based on all laboratory data collected to date, discuss the migration of contamination and any impact or potential impact to sensitive environments or public and private water supplies. Discuss how the remedial implementation will mitigate these existing or potential impacts.

1.3 Soil Contamination

1) Describe in detail the installation of the remedial system(s) utilized to address soil contamination. Include detailed discussion of well installation, soil removal, etc.

2) Discuss in detail any modifications to, or variances from, the remedial design which were necessary for installation of the remedial system(s). (Remember all variances must be approved by KDHE in writing).

3) Discuss in detail the system test conducted, identifying and explaining operational adjustments made for optimum system performance.

4) Discuss actual system operation and effectiveness as compared to expected parameters used for the remedial design.

5) Describe the observed performance of the remedial system/method. Describe and discuss handling, treatment, or disposal of by-products generated by the remedial method implemented; e.g., vapor and fluid effluent from the remedial process. Discuss the remedial system's effectiveness relative to meeting any established (permit) discharge requirements for effluent waste streams.

1.4 Groundwater Contamination

1) Describe in detail the installation of the remedial system(s) intended to address groundwater contamination.

2) Discuss in detail any modifications to, or variances from, the remedial design which were necessary for installation of the remedial system(s). (Remember all variances must be approved by KDHE in writing).

3) Discuss in detail the system test conducted, identifying, and explaining operational adjustments made for optimum system performance.

4) Discuss actual system operation and effectiveness as compared to expected parameters used for the remedial design.

5) Describe the observed performance of the remedial system/method. Describe and discuss handling, treatment, or disposal of by-products generated by the remedial method implemented; e.g., vapor and fluid effluent from the remedial process. Discuss the remedial system's effectiveness relative to meeting any established (permit) discharge requirements for effluent waste streams.

1.5 Free Product Recovery (If applicable)

1) Discuss in detail the installation and implementation of the free product recovery system.

2) Describe any modifications to the remedial design for the free product recovery system necessary for installation. All variances must be approved by KDHE in writing.

3) Discuss the observed effectiveness of the free product recovery system and provide the rate of free product recovery.

4) Describe how the free product is handled, stored on-site, and the method and frequency of free product disposal.

1.6 Remedial System(s) Modification-

Provide a complete list of RDP modifications. Discuss each modification in detail.

1.7 Certificate of Completion

The Project Engineer must include a completed Certification of Completion (ATTACHMENT B of the SRP RFP) verifying the remedial system has been implemented in accordance with the approved RDP, including any modifications. The Certification of Completion must be signed by the owner and signed and stamped by the Project Engineer. A copy must be included in Appendix 10. The Certification of Completion must be submitted to the KDHE Project Manager prior to the remedial system start-up.

1.8 Remedial System Start-up

1) Discuss in detail the final start-up of the remedial system(s) installed.

Include a summary of collected data in tabular form and a brief discussion of system adjustments (i.e. flow-balancing, flow, pressure measurements, vapor concentration measurements, etc.) made to optimize contaminant removal. Also include a table containing air sparge line integrity test data.

2) Prepare a Vacuum Response map based on observation and SVE well vacuum data collected while the SVE and air sparge systems were operating. Data must be illustrated using isopressure contours.

3) Discuss any anomalous measurements with either of the systems.

1.9 Operation, Maintenance and Monitoring (OM&M)

1) Describe in detail all operation, maintenance, and monitoring activities that will be required to allow continuous operation of the remedial systems at this site. Include all activities to be conducted daily, weekly, monthly, etc.

2) Discuss the schedule established for conducting operation and maintenance activities and indicate who will be conducting each segment of the work.

3) Describe any OM&M requirements for the remedial systems not performed by Vendor, and indicate who will be responsible for this task. Describe the training provided for each individual.

SECTION 2.0-TABLES-

The tables must be labeled with the numbers and titles provided below. Number each page of tables. Include in the table a column for each numbered item requested. Do not reference or include in this section, any discussion, maps, photographs, drilling logs, or other documents included in this report. Abbreviations or material referenced from other publications should be explained at the bottom of the table.

Table 2.1 **Summary of Work Completed-** Include the following information for work completed during this phase of site work only. Provide this information in the same categories as listed on the Project Bid Proposal Sheets.

1) Total number of borings installed, including footage drilled and footage plugged.

2) Total number of monitoring wells installed, including footage drilled.

3) Total number of SVE wells installed, including footage drilled.

4) Total number of AS wells installed, including footage drilled.

5) Total number of any other wells installed, specifying type, including footage drilled.

6) Total footage drilled.

7) Total number of groundwater samples submitted for laboratory analysis.

8) Total number of soil samples field screened.

9) Total number of soil samples submitted for laboratory analysis.

10) Total number of air samples submitted for laboratory analysis.

Table 2.2 **Well Completion Information**- Include the following information for each well installed during this RFP.

1) Well number (assigned by the consultant).

2) The identification number from the KDHE Well Tagging Form (Attachment E of the SRP RFP).

3) The surveyed elevation of the well's vertical datum control point (survey pin) and the elevation of the top of casing.

4) Date of well installation.

5) Volume of water removed during well development.

6) Total depth of boring (ft. below ground surface).

7) Casing material, diameter, and wall thickness.

8) Total depth of casing in feet (ft. below top of casing within 0.10 inch)

9) Screened interval, slot size, gravel pack, and well seal in feet (ft. below top of casing within 0.10 inch)

Table 2.3 **Soil Field Screening and Laboratory Results**- Include the following information for each soil sample collected to date at the site. **Include all historical samples collected and analyzed.** Present all results for each sample point in chronological order. Do not include information relative to soil remediation in this section.

1) Boring and/or well number

2) The soil sample depth interval (from/to ft. below ground surface to 0.1-foot).

3) The field instrument used for field screening each sample.

4) The field screening results in parts per million (ppm) for every sample, including samples not sent for laboratory analysis.

5) The date each sample was collected.

6) The field and/or laboratory analytical method.

7) The analytical results of each constituent in parts per million; when not detected, record the analytical reporting limit (e.g., <0.001)

Table 2.4 **Groundwater Level Information** The groundwater levels in all wells must be measured on the same day, and measurements must be corrected for petroleum products detected. If product is detected, explain at the bottom of the table how the measurements were corrected.

1) Well number (assigned by the consultant).

2) The identification number from the KDHE Well Tagging Form (Attachment E of the SRP RFP).

3) The surveyed elevation of the well's vertical datum control point (survey pin) and the elevation of the top of casing.

4) Provide water level elevation, screened intervals, and the depth to groundwater (in feet) in all monitoring wells under static conditions and 30 days after start-up of the remedial system.

5) Provide the elevation and thickness of separate-phase product under static conditions and 30 days after start-up of the remedial system.

6) The dates the measurements specified in items 3, 4, and 5 above were obtained.

Table 2.5 **Groundwater Analytical Results –** Include the following information for each groundwater sample collected from observation, monitoring wells, public water supply, and private (domestic) wells associated with this site and submitted for laboratory analysis to date. Include all historical samples collected and analyzed. Present all results for each sample point in chronological order.

1) Well number.

2) The concentrations of each analyte specified in the site-specific bid documents, and total BTEX, in micrograms per liter (µg/L); when not detected, record the analytical reporting limit (e.g., <0.001).

3) The volume of water purged from the well prior to sampling

4) Sampling method and equipment used.

5) The date the well was purged and sampled.

6) The laboratory analytical method.

Table 2.6 **Waste Handling/ Disposal Results- Results from analyses necessary to meet local, state or federal discharge requirements must be included in this section**. Include the following information for wastes handled:

1) The type of wastes generated (soil, water, etc.)

2) The quantity of waste generated for each type of waste.

3) The storage methods used for each type of waste.

4) The field analyses results of the wastes during the on-site treatment process.

5) The analytical method (e.g. EPA 8260; PID; Draeger Tube, etc.)

6) The analytical results of each constituent detected in soil in parts per million (ppm) and in water in micrograms per liter (µg/L); when not detected, record the analytical reporting limit (e.g., <0.001).

SECTION 3.0-MAPS-

The maps listed below must be prepared as applicable to the remedial methods employed. All maps must be drawn to scale and labeled with the titles provided. Do not reference, or include in this section, any discussion, tables, photographs, drilling logs, or other documents included in this or any other report. The scale must not exceed 1 inch = 50 feet for smaller sites and 1 inch = 100 feet for larger sites. Include a north arrow, scale, and legend on all maps.

Figure 1 **Site Base Map**- A map derived from the Remedial Site Survey, including layout of the remedial system. Label the location of all remedial excavation work, injection wells, SVE Wells, recovery wells, and monitoring wells. Include the location of all buildings, source areas including former/existing USTs and dispensers, roads, property boundaries, and any other major structures in the area of the contaminant plume. Also include a map with an enlarged view of the system wells giving a clear description of the well names.

Figure 2 **Groundwater Flow Map/Static Conditions**- A map, adapted from Figure 1, representing under static conditions the groundwater elevation

within each well, using the most recent data collected, labeled equipotential contours, and arrow(s) indicating predominant flow paths and direction.

Figure 3 **Groundwater Isoconcentration Maps**- Develop all groundwater isoconcentration maps for the constituents outlined below using the most recent analytical data using Figure 1 as the base map. Sample points shall be labeled with concentrations in ppb. Each isoconcentration map shall include the location of all monitoring wells and sampling points. Isoconcentration lines shall be labeled with concentrations in ppb. Develop isoconcentration maps only if the constituent is detected in three or more wells.

3.1 Total Benzene, Toluene, Ethylbenzene, Xylenes (BTEX)

3.2 Benzene

3.3 Methyl tert-Butyl Ether (MtBE)

3.4 1,2 Dichloroethane (1,2-DCA)

3.5 Polynuclear Aromatic Hydrocarbons (PAHs), if specified in the RDP or SRP bid documents

3.6 Naphthalene

3.7 Ethylene Dibromide (EDB) using EPA Method 8011

Figure 4 **Free Product Isopach Map/Static Conditions**- If free product is detected, develop an isopach map depicting, under static conditions (pre start-up), product thickness utilizing Figure 1 as the base map. Each isopach map shall include the location of all monitoring wells or sampling points.

Figure 5 **Soil Remedial Map**- If contaminated soils are being remediated off-site, provide a detailed map depicting the layout of the soil remediation area. Include nearby permanent structures such as buildings and roads, and other important features such as potential receptors. Also, include all sampling locations.

Figure 6 **System Start-up Vacuum Response Map** – Prepare a Vacuum Response map based on observation and SVE well vacuum data collected while the SVE and air sparge systems were operating. Data must be illustrated using isopressure contours

SECTION 4.0-DRILLING LOGS-

Include schematics for each boring or well drilled during this phase of the work. Do not make reference to, or include in this section, any discussion, tables, photographs, maps, or other documents included in this or any other report. Well completion schematics must be included on the relative drilling logs; groundwater recovery well completion schematics may be provided separately from the drilling log.

At a minimum, the following information must be included on each log:

1) The well number.

2) Date the drilling was conducted.

3) Name of the Driller and Geologist.

4) Description of the sediments, including soil texture, grain size and shape, sorting, color, odor, staining, relative moisture (i.e. dry, moist, wet). Include field screening for contaminant distribution and other pertinent information such as fracturing or solution cavities, and organic content.

5) Field screening results corresponding to depths measured.

6) Depth the saturated zone was encountered and elevation of static water level.

7) The measured intervals of the following: well screen, blank casing, sump, filter pack, bentonite seal and, grout seal. Also include details of well-head completion and the surveyed elevations of the top of the casing and the pad.

8) Provide the type of drill rig, drilling method, soil sampling equipment, and soil analyses equipment utilized.

9) Specific type and amounts of well construction material used, such as: casing type and diameter, screen slot size, filter pack particle size, method of placement, and amount of water used.

SECTION 5.0-SRP/AS-BUILT DRAWINGS-

The plan drawings listed in items 5.1.1 through 5.1.5, inclusive, must be submitted with the report as specified. Provide the following information regarding the remedial systems as constructed. All engineering drawings submitted to KDHE will be stamped, signed and dated by the Project Engineer as per KAR-66-6-1 et seq.

5.1 As-built Drawings/Plans

5.1.1 Site Plan- Provide a site plan derived from the Remedial Site Survey drawn to scale with a north arrow that depicts the location of all fixed objects on the facility property, the former and current UST basin(s), schematics of all remedial equipment and lines, and any other items pertinent to remedial implementation. Identify all major components of the remedial system and fixed objects on the facility property.

5.1.2 Process and Instrumentation Diagrams (P&ID)- Provide P&ID for all remedial equipment. Identify (type and size) and label all components.

5.1.3 Equipment Drawings- Provide detailed drawings, drawn to scale, of all buildings or security systems for the remedial equipment, and drawings to scale of the remedial equipment.

5.1.4 Well Drawings- Provide detailed drawings of all well completions. Include the subsurface completion of the well, the well head completion, and piping extending from the well to the remedial systems.

5.1.5 Equipment Documentation- Provide completed copies of all equipment manuals which are supplied with or available for the equipment installed at the remediation site. A table containing model numbers, serial numbers, equipment type, and manufacturer name of all remediation system equipment installed must be supplied. The table will also contain the contact information to obtain access to the telemetry system. The use of each input shall be clearly described in the Final Remedial Report.

SECTION 6.0-DOCUMENTATION-

Include all information requested in the following format. Do not reference or include in this section, any discussion, tables, maps, or other documents that are included in this report or any other report.

Appendix 1-Documentary Photographs: Include at least 24 digital photographs depicting the site before any construction activities, during construction of the remedial systems, the site after system installation and property restoration, key components of the remedial systems such as vapor extraction equipment, equipment housing or containment, soil treatment locations, etc. The photographs must provide a general perspective of activities conducted during implementation and the site appearance after construction is completed. Each photo must be labeled and correlated to an index which contains a brief description of the subject and directional orientation of the view. Additionally, include with the FRR these digital photographs on a recordable compact disk.

Appendix 2- BER Well Tag Form: Include a copy of the completed Form.

Appendix 3-KDHE Water Well Records: Include copies of the KDHE Water Well Records (form WWC-5) for each well installed.

Appendix 4-Laboratory Data: Include all analytical laboratory reports and chain of custody documents.

Appendix 5-Field Notes: Field notes must be hand-written and signed by the individual who performed the work described therein. Each page must be signed and dated as the notes are being taken according to Proposal Definitions 6.27

Appendix 6-Off-Site Waste Handling Documentation: Provide documentation indicating how wastes removed from the site were characterized, handled and treated.

Appendix 7-Site Remediation Permits: Provide copies of all permits required for implementation of the SRP.

Appendix 8-Lien Release: Provide copies of Lien Releases for all subcontractors and major equipment Vendors. (Notarized Affidavits of Payment are acceptable.) Releases must be included for approval of the FRR.

Appendix 9-Trenching/Compaction Test/Slope Verification Map/Pipe Tightness Test: Provide copies of all verification related to trenching and piping as required by the approved RDP and SRP.

Appendix 10-Engineering Certification: The Project Engineer must include the Certification of Completion (ATTACHMENT B) verifying that the remedial system has been implemented in accordance with the approved RDP. This must include the complete list of RDP modifications. The Project Engineer is responsible for overseeing staff involved in all aspects of the on-site construction activities and is required to be present during remedial system start-up. The Certification of Completion must be signed by the owner and signed and stamped by the Project Engineer. Construction related testing requirements contained in the RDP specifications must be included as attachments to the Certification of Completion.

Appendix 11-Electrical Inspection Sheet: Provide electrical inspection sheet with signature of licensed electrician conducting the inspection.

ATTACHMENT K

MONITORING/OMM EVENT SUMMARY SHEET

Kansas Petroleum Storage Tank Release Trust Fun
Monitoring/OM&M Event Summary

Page_____of__

Site Name: _____ Vendor: _____

Project Code: _____ Sampling Tech: _____

Date Sampled: _____ Event #: _____

Event Frequency: Annual_____Semi-Annual_____Quarterly_____Monthly_____

Well #	Sampled (x)	Not Sampled		
		FP	Dry	Other (explain)
Total No.				

Signed: _____

This form is to be completed in the field and MUST accompany ALL invoices for Monitoring & OM&M work.

ATTACHMENT L

EQUIPMENT BUILDING LOG-IN SHEET

Site Address: _____

Project Name: _____

Project Code: _____

EQUIPMENT BUILDING LOG-IN SHEET

ANYONE ENTERING THIS BUILDING FOR ANY REASON MUST MAKE A LOG ENTRY

(*If you do not know where the hour meters are located or how to read them, you make leave this space blank.)

Printed Name Company/Agency	Date	Status ON/OFF	*Hour Meter Reading for each Piece of Equipment	Reason for Visit	Comments
			1. 2. 3. 4.		
			1. 2. 3. 4.		
			1. 2. 3. 4.		
			1. 2. 3. 4.		
			1. 2. 3. 4.		
			1. 2. 3. 4.		
			1. 2. 3. 4.		
			1. 2. 3. 4.		

ATTACHMENT M

OPERATIONAL STATUS SHEET

REMEDIAL SYSTEM OPERATION STATUS
Petroleum Storage Tank Release Trust Fund

Date: _____

To: Kansas Department of Health and Environment

Fax: (785) 296-1690

Attention: _____

Phone: _____

From: _____

Phone: _____

KDHE Project Name: _____

KDHE Project Code: _____

SYSTEM STATUS:

	OPERATIONAL YES (Date)	OPERATIONAL NO (Date)	Problem/Solution
Groundwater Treatment System			
Soil Vapor Extraction System			
Air Sparge System			
Product Recovery System			

Date and Time Implementation Vendor will be on-site to determine problem: _____

Date system is expected to be operational: _____

ATTACHMENT N

ELECTRICAL HOOK-UP & SUPPLY

ELECTRICAL METER AND PRIMARY ELECTRICAL SUPPLY
and
ESTABLISHING COMMUNICATIONS TO A REMEDIAL SYSTEM

The line item on the bid sheet for Electrical Meter and Primary Electrical Supply will include Vendor's labor to provide required information to the power company (see attached form), arrange for installation of the electrical service, and for setting up billing between the electric utility and KDHE**. The utility's charge for setting power pole(s) (if required) and electric meter will be invoiced directly to KDHE by the electric utility.**

The electrical meter will be installed as close as possible to the remedial trailer. Prior to bidding, it is Vendor's responsibility to evaluate site conditions which may affect power pole location. It is Vendor's responsibility to ensure that the electrical meter is connected to a power supply of the appropriate phase and voltage required to operate the remedial system.

The form (located on the following page) must be completed to the extent that the electric utility can install the appropriate power and meter at the correct location. Information from the completed form will be submitted to the electric utility by Vendor. After contacting the electric utility, Vendor will contact the KDHE Project Manager via email or fax supplying names and phone numbers of contacts at the utility. KDHE will then contact electric utility to authorize the service requested by Vendor.

All utility bills must be addressed to:

KDHE – BER – STS
ATTN: CS UNIT
1000 SW JACKSON ST., STE. 410
TOPEKA, KS 66612-1367

ESTABLISH ELECTRIC SERVICE
TRUSTFUND REMEDIATION PROJECT
for
Kansas Department of Health and Environment

Date:	
Name of Electric Utility:	
Department:	Engineering Department / Billing Department
Address:	
City/ZIP Code:	
Contact/Phone Number:	
Trust Fund Project Name:	
KDHE Project Code:	
Address:	
City/ZIP Code:	
Detailed description of where the electric service should be located:	
Electrical Service Requirements	
Phase:	
Voltage:	
On site contact for electric service:	
Date service needed:	
Special instructions to facilitate electrical hook up:	

Procedure for Establishing Communications to a Remedial System

KDHE must have to following information:

1. Type of service required: land line for phone; cell phone; special cable hook-up, etc.

2. Site name and site code.

3. Site address where unit is located. (City & street number.)

4. Accurate description of the location of the trailer or shed on the site property.

5. Location of the control panel on the trailer or shed.

6. Will a jack need to be installed in the control panel?

7. Name and phone number of an on-site contact person who is available during normal working hours and knows where the communications line is to be installed. (This is usually the owner/operator or their on-site representative.)

8. Any special instructions the communications company may need to complete the installation.

Please Note: Many of the firms supplying internet based telemetry systems will provide the Vendor with a telemetry services agreement or registration form. The Vendor will need to complete the part of the form pertinent to them and then submit the form to KDHE for completion.

Fax or e-mail the above information to the following people (e-mail is preferred):

David Caldwell	dcaldwell@kdheks.gov	fax: 785-296-6190
Barbara Jordan	bjordan@kdheks.gov	fax: 785-296-6190
Kim Silver	ksilver@kdheks.gov	fax: 785-296-6190

Allow at least 10 working days for the installation to be completed.

ATTACHMENT O

REMEDIAL DESIGN/IMPLEMENTATION SITE REMEDIATION PLAN

ATTACHMENT O
ReDI SRP

Remedial Design/Install Site Remediation Plan (ReDI SRP) differs significantly from the typical Site Remediation Plan (SRP) projects in that there has not been a site specific remedial design developed. ReDI SRP bid packages include the Remedial Design Implementation Plan (ReDIP) Trailer and Equipment Specifications (Attachment P to the SRP RFP) which is a pre-designed remedial system that is presumed sufficient to address site contaminants. Implementing this pre-designed system allows actual clean up to begin sooner.

Electric Conductivity logging, soil boring, and SVE pilot test well installation are included in the scope of work. For ReDI SRP projects, pilot testing for soil vapor extraction well design and placement is conducted as part of a brief investigation prior to system installation. Data from this work are used in the design of the remedial well field. Proposed SVE and air sparge well locations will be presented in the Remedial System Layout drawing included with the Letter Report. **Pilot testing of air sparge wells occurs during start-up of the remedial system and is not part of the abbreviated design phase. Field Geologist, Project Geologist, or Project Engineer will conduct SVE and air sparge pilot testing.**

As a cost and time saving measure, ReDI SRP bids are developed for sites that have similar depositional conditions to other remedial sites where a moderately sized SVE and air sparge remedial system has been effective. If SVE pilot testing indicates that soil vapor extraction will not be effective, contact the KDHE Project Manager immediately so that alternative SVE designs can be considered.

It is the responsibility of Vendor to obtain all permits required to operate the remedial system.

ReDI SRP's are a modified SRP Rev. 10 Request for Proposal (RFP). The ReDI SRP's are subject to the requirements of the SRP Rev. 10 guidance document. Attachment O outlines areas in which the ReDI SRP deviates from SRP Rev. 10, 12/10. Attachment P includes the Remedial Design Implementation Plan Trailer and Equipment Specification. The ReDI SRP bid sheets reflect the required scope of work.

ATTACHMENT O

REMEDIAL DESIGN/IMPLEMENATION SITE REMEDIATION PLAN (ReDI SRP)

1.0 PROJECT CANCELLATION

1.0.1 Sites are routed to the ReDI SRP process because available information suggests that SVE and air sparging technologies will be successful. KDHE's evaluation of these sites, prior to bid solicitation, is based on soil boring information contained in the Site Assessment Report. Occasionally, geologic descriptions contained in the drilling logs of these reports are not of sufficient detail to indicate small clay seams that may prevent an SVE/air sparge system from operating safely and effectively. ReDI SRP projects will be cancelled if it is determined that a low permeability sedimentary deposit(s) is present that will prevent adequate capture of air from the sparge system. Data collected from direct push site assessments (soil core and electric conductivity logs) will be submitted to KDHE for review prior to Vendor ordering the remedial trailer or system components. This review is intended to prevent the ordering of equipment that cannot be used.

2.0 REMEDIAL DESIGN/IMPLEMENTATION SITE REMEDIATION PLAN (ReDI SRP)

2.0.1 ReDI SRP Goals

2.0.1.1 Implement the ReDI SRP as described in EXHIBIT 1 of this bid package according to the requirements of this document.

2.0.1.2 Prospective Vendors shall develop a bid for the additional site assessment, all equipment as specified by the Remedial Design Implementation Plan (ReDIP) Trailer and Equipment Specifications (Attachment P to the SRP RFP), utility hookup, SVE pilot testing, design, installation of wells and trenching, and provide for operational and maintenance costs for the first two years of operation. A full two year warrantee on all equipment is required. All piping and trenching will be bid on a per linear foot basis. Concrete/asphalt replacement (that not associated with trenching) will be bid on a square foot basis. An estimate for both trenching and concrete replacement has been provided on the bid sheets (EXHIBIT 2). Vendor is responsible for performing all of the operation and maintenance described in EXHIBIT 1 and the SRP RFP (and Attachments) within the total project cost. If determined necessary, approval for additional work will be based on line item costs detailed in the Project Bid Proposal Sheets.

Prospective Vendors must include all costs necessary to accomplish the remediation plan expectations and site goals. The successful Vendor must implement the remediation plan as designed, within the approved cost for the site on a line item basis.

Vendor is responsible for meeting the Remediation Plan Expectations and ReDI SRP Goals outlined in this RFP.

2.0.2 Remedial Equipment Substitutions

2.0.2.1 The equipment specifications provided with this document have been pre-engineered and are intended to be sufficient for normal operation and maintenance in the areas chosen for this project. All equipment will be pre-manufactured or made of pre-manufactured components and the entire system must be NRTL certified. For all applications, the equipment substitutions will be limited to "or equal" specifications in manufacture only. Failure to provide equipment that meets or exceeds the design specifications is unacceptable. In such instances Vendor will be required to adhere to the original design at Vendor's cost.

Engineering hours are given in the ReDI SRP bid sheets to allow Project Engineer an opportunity to review the design for errors and omissions, make limited equipment substitutions if necessary (see above), conduct limited SVE test(s), select remedial well locations, locate piping routes, determine trailer location, determine screened intervals of remedial wells, and make suggestions to enhance the operation of the system. All recommendations shall be pre-approved by KDHE in writing, prior to installation. Failure to secure proper approval for equipment substitutions will result in Vendor having to replace said equipment with the specified equipment or denial of payments for the equipment.

2.0.3 Drilling

2.0.3.1 Prior to drilling and installation of any wells, a direct push site assessment will be conducted. The assessment will utilize both direct push continuous core sampling and direct push electric conductivity logging. Locations for the direct push survey will be selected to both investigate potential source areas and give an overall geologic assessment of the site. The continuous core direct push survey will be conducted first. Each core will be described, sampled, and logged by Field Geologist. All sampling methods and boring logs shall be performed in accordance with the latest ASTM Standards. Each lithologic/soil stratigraphic unit will be fully described on the boring log and include at a minimum; soil texture, grain size and shape, sorting, color, odor, staining, relative moisture (i.e. dry, moist, wet), field screened for volatile organic contaminants, and other pertinent information. A composite sample from each continuous sample sleeve will be field screened; however, changes in sediments/texture within the samples will be field screened discretely. An electric conductivity (EC) log will be generated to verify sedimentary descriptions prior to selecting well location, screen depths, and intervals, and to identify depositional units that could pose a problem for the successful operation of the selected remedial technologies. A discrete sample will be taken to confirm the composition of any fine-grained sediment indicated by the EC probe in the saturated zone. The conductivity log

will then be compared to the lithologic description generated from the continuous sampling. Any suspected anomaly between the logs must be brought to the attention of the KDHE Project Manager. Information regarding the direct push electric logging is located in Appendix O-1. A separate mobilization for the direct push survey is provided so all logging will be completed and submitted to the KDHE Project Manager prior to mobilization of the drill rig.

2.0.4 Soil Vapor Extraction Test

2.0.4.1 For most applications, an existing monitoring well will be used as an extraction well. If existing monitoring wells are not available, the Vendor will install all necessary wells to conduct an SVE test. In all cases, a soil vapor extraction (SVE) test well will have a minimum inside casing diameter (ID) of 4 inches, with the screen sized appropriately for site conditions be used.

2.0.4.2 If specified in Site Specific Information (see Exhibit 1), install soil vapor extraction observation well(s) with an I.D. of four inches or larger.

2.0.4.3 The SVE test should be conducted for a period of time necessary to collect sufficient data for the design. Where possible, several extraction wells and air flow rates / vacuum combinations should be utilized during the test.

2.0.4.4 Determine the following unsaturated zone characteristics: permeability of soils to air, vapor flow rate, zone of remediation (horizontal and vertical pressure gradients), effluent contaminant levels, and the feasibility of in situ soil remediation techniques at the site.

2.0.4.5 Flow measurements must be taken in the field using an in-line flow meter, pitot tube, or other similar flow measuring device. This measurement should be taken in line, up stream of any vacuum relief valve, sample port, etc. All flow measurements must be reported in scfm.

2.0.4.6 Flow rates must be measured between the SVE test well and the SVE blower, upstream of the dilution valve. The bypass air (dilution) air flow rate will be measured and included in the report.

2.0.4.7 Vendor must insure that the manometers/vacuum gauges are calibrated to atmospheric conditions prior to the start. A background magnehelic must be open to the atmosphere to measure any changes in barometric pressure during the duration of the test. Any deviation of ambient barometric pressure changes during the test must be reported in the field notes, corrected in the tables, and in the text.

2.0.4.8 If SVE test well(s) and/or observation wells are installed, the well gravel pack and screen must be sized and located to insure the characteristics of the unsaturated zone are determined during the test. The SVE wells will be grouted with neat cement or other grout approved by the KDHE Project Manager .

2.0.4.9 If SVE test well(s) and/or observation wells are installed, at least one test well shall be installed in the area determined to have the highest level of soil contamination.

2.0.4.10 The SVE test shall be conducted in such a manner that all unsaturated zone characteristics are fully determined. All data will be presented in Letter Report.

2.0.4.11 The SVE pilot test will be conducted by the Field Geologist, Project Geologist, or the Project Engineer.

2.0.5 Site Surveys

2.0.5.1 A **Full Site Survey** will be conducted after approval of the Part 1 of the ReDI SRP Field Work Plan and will be completed for submittal with the Letter Report. The Full Site Survey will give an accurate depiction of site structures and location of utilities for design purposes and will subsequently be used as the base map for all future site maps. At a minimum, the Full Site Survey will include all buildings and structures; limits and types of pavements; locations of curbs, driveways, and sidewalks; pump islands or joints associated with the removal of former petroleum facilities; all above ground and underground utilities including meters, poles, vaults, etc; limits of landscaping; all existing wells located on the site; and establishment of a permanent benchmark on the site. The Full Site Survey shall show the property lines as indicated in the public records or available surveys. The Full Site Survey must be conducted by a Registered Land Surveyor (RLS) in the State of Kansas.

2.0.5.2 A **Remedial Site Survey** will be performed prior to system start-up.

3.0 ENGINEERING CERTIFICATION

The ReDI SRP Project Engineer must submit to the KDHE Project Manager by registered mail a completed Certification of Completion (Attachment B to the SRP RFP) verifying that the remedial system has been implemented in accordance with the ReDI SRP RFP. This shall include a complete list of modifications as approved by the KDHE Project Manager. The ReDI SRP Project Engineer is responsible for overseeing staff involved in all aspects of the onsite construction activities and is required to be present during remedial system start-up. The Certification of Completion must be signed by the owner and signed and stamped by the Project Engineer. A copy of the Certificate of Completion must be included in Appendix 10 of the Final Remedial Report.

4.0 DEADLINES AND NOTICE TO PROCEED

4.0.1 Vendor will sign the contract with the O/O **within 14 days after the bid approval date**. Vendor will complete and submit Part 1 of the ReDI SRP Field Work Plan Worksheet (Appendix O-2) to KDHE **within 14 days after the contract is signed between the Vendor and the O/O**.

4.0.2 The ReDI SRP Work Plan Worksheet must include site information, drilling information, remedial well design information, equipment methods, and a complete list of all field personnel including subcontractors, (i.e. geologists, engineer, technicians, drillers, installers, electricians, surveyor, laboratory used), and a schedule of activities.

4.0.3 KDHE will review the ReDI SRP Work Plan Worksheet (Appendix O-2) and provide written comment, or if approved, written authorization for Vendor to proceed within ten (10) days following the date KDHE receives the schedule.

4.0.4 Vendor may request from KDHE that written authorization to proceed be sent in the U.S. Mail to Vendor's office at the address provided by Vendor, or facsimile to Vendor's office at a number Vendor provides. Unless otherwise requested by Vendor, a written Notice to Proceed will be sent by U.S. Mail to the contact person provided by Vendor in the RFP.

4.0.5 Vendor should submit two copies of Letter Report **within 60 days of bid approval.**

4.0.5 Vendor will submit the Letter Report prior to any field activities associated with the installation of the remedial system. Format for Letter Report is found in Appendix O-3. KDHE Project Managers will have ten (10) days to review and approve the letter report or forward comments to Vendor concerning deficiencies in the Letter Report. If KDHE Project Manager exceeds this review period, the remedial system start-up will be extended, at Vendor’s request, by the number of working days the review letter was overdue to Vendor.

4.0.6 Vendor must have the remedial system startup occur **within 150 days of contract signing.**

4.0.7 Vendor will submit two copies of the Final Remedial Report to KDHE **within 60 days of system start-up.** Vendor will submit one copy to the O/O by Certified Mail.

Extensions to the implementation schedule may be allowed due to extreme weather conditions, property access or permitting problems. Extensions must be requested in writing prior to any due dates for consideration.

4.0.8 Vendor will submit, in digital format on CD, Quarterly Reports to the KDHE Project Manager **within 45 days after the end of the quarterly reporting period.** A digital Quarterly Report will consist of the Quattro Pro spreadsheet (supplied by KDHE) with appropriately entered data, isoconcentration maps for groundwater contaminants detected any well, a groundwater flow map, all field notes, a copy of the Remedial System Log-in

sheets, and laboratory reports. The entire quarterly report will be submitted in digital format on CD. The spreadsheet portion of the report will be submitted as a .wb2 document while the other portions of the report will be submitted as .pdf documents.

Included with the electronic format, a hard copy of the Quarterly Report will be sent via US Mail that includes: 1) printed copy of the Quattro Pro spreadsheet, 2) Remedial Site Map, 3) required Isoconcentration maps, 4) Composite Historical Isoconcentration Maps, 5) Field Notes.

All Vendors will be required to obtain a version of Quattro Pro fully compatible with the spreadsheet. The spreadsheet was developed using Corel Quattro Pro (Program release 8.0.0.709). The spreadsheet is designed to manipulate data in a manner that automatically calculates, graphs, and archives important remedial system operational parameters. The spreadsheet is also designed to aid in identifying operational problems. Instructions imbedded in the spreadsheet document instruct the user on data entry and archiving.

No portion of the digital report submitted to KDHE can be password protected or protected in any manner which will prevent data from being accessed and manipulated by KDHE.

4.0.9 Monthly reports: The initial monthly scheduled visit due date will start 30 days after the official start-up date, with a report due within 15 days. Subsequent monthly reports will be due every 30 days thereafter, except for those months that require a Quarterly Report. Vendor is to maintain a schedule which allows them to complete their site visits within six (6) days of the scheduled site visit. Reimbursement will be denied for monthly data submittal reports not received within 15 days of the field activity date. There is no grace period. Failure to comply with the monthly data submittal will result in denial of payment for the report. If the report is not received before the Quarterly Report, the incentive payment for that quarter will be denied.

KDHE will allow some flexibility in establishing the sampling date, to coordinate with Vendor's existing sampling and remedial system operation schedule in the area. Any such variance from start-up date must be requested and approved by KDHE Project Manager within the first 60 days of operation.

Monthly report (Appendix O-4) will be submitted via US Mail or email. The Monthly Report should be generated using the Quattro Pro Quarterly Report. Monthly data is entered on this spreadsheet in the required monthly report format.

4.0.10 System Start-up: All system startups will be conducted during normal KDHE business hours and with concurrence of KDHE Project Manager.

5.0 REMEDIAL DESIGN/INSTALL PLAN FIELD WORKPLAN

Submit one copy of the ReDI SRP Field Work Plan Worksheet on the forms supplied in APPENDIX O-2. The Work Plan Worksheet has been divided into two parts; Part 1 includes the necessary information for the additional assessment/pilot testing and will be submitted prior to any field activities; Part 2 includes the necessary information for the remedial implementation phase and will be submitted with the Letter Report. Additional information should be included as needed.

6.0 LETTER REPORT

6.0.1 The Letter Report summarizes all assessment activities to date. It is intended to be a brief report outlining work that was completed to identify/confirm the source areas, the results of the pilot tests, all boring logs, EC logs, Part 2 of the Field Work Plan Worksheet, and a layout of the proposed remedial system. Additional materials (i.e. WWC-5, analytical, etc.), that were produced but not requested in this report, will be included in Final Remedial Report.

6.0.2 The report shall include a cover page with the following information: report title; site name; site address; KDHE project code; section, township, and range to four quarters; report date and the name of the person who prepared the report. Report must be stamped and signed by Project Engineer and Project Geologist. The format for Letter Report is found in Appendix O-3.

7.0 QUARTERLY OPERATION/MAINTENANCE AND MONITORING REPORTS

7.0.1 A Quattro Pro spreadsheet report format will be provided upon request. This report format is unique to ReDI SRP. **THIS FORMAT MUST BE USED ON ALL REPORTS**. One hard copy and two digital copies on CD of each quarterly report must be submitted to the appropriate KDHE personnel within 45 days after the end of the quarterly reporting period. The hard copy quarterly report will consist of a printed copy of the Quattro Pro report, isoconcentration maps (Total BTEX, Benzene, MtBE, Naphthalene, 1,2-DCA), historical isoconcentration maps (a 3 in. x 4 in. reduction of the isoconcentration maps printed on 11 in. x 17 in. paper), Site Base Map showing remedial system, groundwater flow map (include labeled equipotential contours and an arrow indicating the predominant groundwater flow direction), field notes, laboratory reports, and a copy of the trailer sign-in sheets. The digital copies will consist of the entire Quarterly Report, all isoconcentraion maps, historical isoconcentration maps, Site Base Map showing remedial system, groundwater flow map (include labeled equipotential contours and an arrow indicating the predominant groundwater flow direction), field notes, laboratory reports, and a copy of the trailer sign in sheet. One CD will be sent to the KDHE Project Manager and one CD will be sent to the KDHE District Representative.

ATTACHMENT O
APPENDIX O-1

DIRECT PUSH METHOD OF ELECTRICAL CONDUCTIVITY LOGGING AND SOIL SAMPLING

DIRECT PUSH METHOD OF ELECTRICAL CONDUCTIVITY LOGGING AND SOIL SAMPLING

APPENDIX O-1

This attachment outlines the recommended procedure for conducting electrical conductivity logging and soil sampling using direct push methods to advance the probe into the subsurface soils. This procedure should be used in conjunction with conventional drilling methods on underground storage tank Remedial Design Plans performed for KDHE where alluvial deposits are anticipated.

GENERAL

The contractor must have available a Geoprobe, Earthprobe, or similar direct-push vehicle capable of collecting continuous soil cores or discrete soil samples to the depth indicated in the approved Site Work Plan. Soil conductivity logs will be accomplished using a direct-push EC Probe. The operator should be a licensed water well driller in the State of Kansas and personnel should be OSHA certified in accordance with OSHA 29 CFR 1910.120.

All drilling and well construction activities are to be performed in accordance and consistent with ASTM Standards D6282-98 (Guide for Direct Push Soil Sampling for Environmental Site Characterizations), D6001 (Guide for Direct-Push Water Sampling for Geoenvironmental Investigations), D5753 (Guide for planning and Conducting Borehole Geophysical Logging) and applicable KDHE requirements and BER Standard Operating Procedures.

The contractor and the Kansas Department of Health and Environment project manager prior to the work will, mutually agree upon, any deviation from these standards necessitated by field conditions and/or other circumstances, in writing.

ELECTRICAL CONDUCTIVITY (EC) PROBE METHODS

Electrical conductivity logging of in-situ soils can be a useful tool to map subsurface lithologic conditions on sites where samples may be difficult to obtain through traditional drilling methods. Obtaining correct lithology and representative samples in formations with heaving sands and saturated soils are imperative. EC logs allow indirect observation of subsurface lithology in a relatively undisturbed state. Environmental remediation system designers can use EC in prevention of setting remedial wells into and below aquatards, which, restrict air injection and recovery well systems. In general, fine-grained sediments exhibit higher electrical conductivities than medium and course grained sediments. EC is an extremely useful tool when properly applied and calibrated with discrete sampling and in conjunction with traditional soil sampling and monitoring wells.

A continuous full depth EC log will be generated for each proposed location. Due to differences in vertical resolution and depths of current penetration, both Wenner and dipole array logs may be performed on each site in accordance with the approved work plan. Dipole-array probes provide better vertical resolution of lithology. However, the electrical current does not penetrate the

formation to as great a horizontal depth as a Wenner Array. It is possible for dipole array probes to not extend beyond the borehole smear zone. Therefore it is recommended that logs utilizing both arrays be used on a site.

The EC probe shall be configured so that either a Dipole Array or Wenner Array can be selected. Separate probes for each array are acceptable as long as both are available on-site and can be changed quickly between probes to prevent delays. The EC probe shall be advanced into the soil using a hydraulic direct-push machine with percussive impact. No drilling or open borehole shall be required once surface pavement is penetrated. Probe locations and sample depths will be performed in accordance with the approved work plan.

The probe shall be tapered to allow continuous contact between the soil and the probe electrodes. An electrical current will be sent through the formation between at least two electrical contacts integrated on the probe. The probe will be connected to the real-time data logger with a direct readout screen so that the operator and geologist can graphically see results in the field. The data logger will also save data in spreadsheet compatible format for downloading to a computer. The on screen readout shall chart the soil electrical conductivity at the depth encountered as well as the penetration speed of the probe. EC readings will be recorded in milli-Siemens per meter (mS/m). Probe shall be advanced at a rate approved by the manufacturer for optimum resolution.

Printouts of the spreadsheet data and graphical EC logs shall be incorporated into the RDR Report under the Boring Log Section. Soil conductivity logs shall be correlated with the conventional drill logs and direct push sampling. EC-log data should be included into cross sections where appropriate.

DISCRETE (PISTON) SAMPLING

Following Completion of the EC probe(s), the KDHE project manager and/or site geologist will determine elevations for discrete sampling using a piston-type sampler. The piston sampler is designed to collect discrete (interval specific) samples in difficult sampling conditions, such as flowing/heaving sands and swelling clays. The system also works well in soils below groundwater. The piston sampler is driven to the desired sampling depth where sampling is to begin. An internal rod attached to the inner drive tip is removed. The sampler is pushed and the sample is retrieved. Pilot holes will be allowed when appropriate. This method prevents flowing or caving materials from entering or plugging the sampler prior to reaching sample depth.

Discrete samples will be required to confirm lithology below the water table. In practice, when a fine-grained (Silt/Clay) soil layer is indicated in the EC log, a discrete sample will be taken to identify composition and lithology.

CONTINUOUS SAMPLED - DIRECT PUSH PROBES

Continuous sampled, direct push soil probes will be conducted in conjunction with EC logging to confirm site lithology. Continuous sampling shall not be conducted on the same probe hole as the EC logging. Continuous samplers will be constructed to attach to the drill rods and the tube sampler will be sturdy enough to be driven by percussion into soils encountered. A core catcher shall be used on every sampling event to prevent loss of sample. Continuous samplers shall be capable of collecting a minimum 4-foot sample. Sample diameters of at least 1.5 inches are desirable, however, alternate sizes may be used if approved by the KDHE Project Manager. A clear, contaminant-resistance liner shall be used within the sample tube to hold core samples until opened for logging. The enclosed core sample will be carefully transported to the appropriate area

where the geologist will open the liner, describe sample. Headspace analysis shall be performed by PID / FID in accordance with the site work plan. All lithology shall be submitted in written boring log form to KDHE.

Soil Probes are to be continuously sampled per the approved work plan. If the geologist and/or the KDHE project manager determine that; continuous sampling cannot not be performed in onsite, saturated soils, discrete samples may be taken to confirm lithology. Depths of discrete samples will be based upon other site borings and prior EC logging. A minimum of one (1) discrete sample per five of depth will be obtained unless the KDHE project manager approves alternate sampling regime.

PROBE HOLE PLUGGING

All soil probes shall be properly grouted. All waste materials shall be disposed of in accordance with local, state and federal regulations.

SAFETY

This document does not purport to address any safety concerns associated with its use. It is the responsibility of the Vendor to establish appropriate safety and health practices and determine the applicability of regulatory requirements prior to use.

ATTACHMENT O
APPENDIX O-2

ReDI SRP Field Work Plan Worksheet
Part 1 and Part 2

PETROLEUM STORAGE TANK RELEASE TRUST FUND
REMEDIAL DESIGN/IMPLEMENTATION (ReDI SRP) FIELD WORKPLAN WORKSHEET

Site Name: _____ **KDHE Project Code:** _____

Vendor: _____ **Vendor Contact:** _____

Instructions: This form must be completed by providing the information requested below. Do not include any attachments with this worksheet other than those described herein.

I. SITE INFORMATION

Site Address: _____ Kansas _____
(Street) **(City)** **(County)**

Legal Description: _____ 1/4 _____ 1/4 _____ 1/4 _____ 1/4 Section _____ Township _____ Range _____ E / W

II. DRILLING and METHODS

A) Specify technology that will be used to obtain continuous samples, if required. : _____ Drill Rig _____ Direct Push

B) Direct Push Survey:

	Brand/Model	**Depth Range**
Direct Push Rig, include maximum depth specification	_____	_____
Conductivity Probe, include peripherals	_____	_____
	_____	_____

C) Drilling: If only one type of drilling method and auger diameter is to be used, complete only column **"A"**. If more than one type of drilling method and/or auger diameter is proposed, complete columns **"A", "B" and "C"**. Install SVE test well and any required observation wells, if necessary.

		A	**B**	**C**
Drill Rig:	Brand/Model	_____	_____	_____
	Torque Rating	_____	_____	_____
Drill String:	Type (Augers, etc.)	_____	_____	_____
	O.D./I.D.	_____	_____	_____
Borehole Size:		_____	_____	_____
Sample Collection Equipment		_____	_____	_____
Drilling Sample Frequency		_____	_____	_____

D) Field Screening:

Field Screening Intervals	_____	_____	_____
Device (Brand/Type/Spec)	_____	_____	_____
Calibration Sample Frequency	_____	_____	_____

E) Well Development:

Method (Bailer, pump, etc.) _____
Minimum well volume to be withdrawn (Drilling Scenario "A") _____
Minimum well volume to be withdrawn (Drilling Scenario "B") _____
Minimum well volume to be withdrawn (Drilling Scenario "C") _____

Materials to be used _____
Procedure _____
Completion _____

F) Laboratory Analytical:

Soil Samples:	Collection Equipment	_____
	Analytical Methods	_____
Water Samples:	Collection Equipment	_____
	Analytical Methods	_____
*Air Samples:	Collection Equipment	_____
	Analytical Methods	_____

*Air samples to be taken during SVE testing.

G) **Waste Handling Procedures:** Briefly describe how soil and water waste generated during drilling, development, and sampling activities will be handled, treated, and disposed.
Soil: _____
Water: _____

H) **Decontamination:** Briefly describe decontamination equipment, methods, and procedures to be employed.
_____
_____
_____
_____

III. WELL INSTALLATION AND UNSATURATED ZONE TESTING

1. **Soil Vapor Extraction (SVE) Test** Provide the requested information as indicated.

A) **SVE Wells:** _____ Number of extraction/observation wells to be installed.
_____ Number of existing well(s) to be used for extraction. Identify well(s): _____

Provide the following information for each extraction and observation well (OBS). Include information for existing wells to be used. Adjustments (i.e. SI, TD...) to SVE well(s) may follow Direct Push EC Logging activities. Attach additional sheets, if necessary.

Well (Label and Denote SVE and/or OBS)	Well #	Well #	Well#
Well Total Depth (TD)			
Casing/Screen Size & Material			
Screen Slot Size			
Screened Interval (SI)			
Grout Material			
Filter Pack Material and Size			
Drilling Scenario (A, B, or C or Direct Push)			

B) **Testing Equipment:**
Extraction (e.g. Blower):
Brand/Model _____
Specifications _____
Flow Rate (for VEW):
Brand/Model _____
Specifications _____
Vacuum Monitoring (for VEW and VOBW):
Brand/Model _____
Specifications _____

C) **Test Parameters:**
Duration of Test _____
Proposed Test Vacuum(s) (inches H_2O) _____
Vacuum Measurement Frequency (VEWs and VOBW's) _____
Flow Rate Measurement Frequency and Location (VEWs) _____

D) **Test Analytical:**
Field Analysis:
Sampling Frequency _____
Device (Brand/Type/Specifications) _____
Calibration Standard & Frequency _____

E) **Laboratory Analysis:** (One air sample to be taken during SVE testing. This laboratory analysis will be submitted with the Air Permit Application.)
Laboratory to Conduct Analysis _____

IV. SITE MAP

The supplied map (see Site Specific Information, Exhibit 1), shall be submitted with the **ReDIP Part 1 Workplan Worksheet** and will include hand-drawn proposed EC probe and continuous core sampling locations. These two types of locations will be differentiated on the map.

V. FIELD PERSONNEL

List below the consultant's personnel and any subcontracting firms that will be involved in the field work. Indicate each individual's name, company, position, title, and general duties. If resume documenting, education, experience, and safety training certification have not been provided with the original bid package for all those listed, submit the information with this worksheet. Attach additional sheets if necessary.

Name	Company	Position	Title	Duties
		Proj. Geologist		
		Field Geologist		
		Proj. Engineer		
		Env. Technician		
		Driller		Direct Push EC Logging
		Driller		Drilling/Well Installation
		Surveyor		Full Site Survey

PETROLEUM STORAGE TANK RELEASE TRUST FUND
REMEDIAL DESIGN / IMPLEMENTATION (ReDI SRP) FIELD WORK PLAN WORKSHEET

Site Name: _____ **KDHE Project Code:** _____

Vendor: _____ **Vendor Contact:** _____

Instructions: This form must be completed by providing the information requested below. Do not include any attachments with this worksheet other than those described herein.

I. SITE INFORMATION

Site Address:
Site Address: _____ Kansas _____
(Street) **(City)** **(County)**

Legal Description:
_____ 1/4 _____ 1/4 _____ 1/4 _____ 1/4 Section _____ Township _____ Range _____ E / W

II. DRILLING and METHODS

A)

Drilling: If only one type of drilling method and auger diameter is to be used, complete only column "A", if more than one type of drilling method and/or auger diameter is proposed, complete columns "A", "B" and "C". Install SVE test well and any required monitoring wells.

		A	B	C
Drill Rig:	Brand/Model			
	Torque Rating			
Drill String:	Type (Augers, etc.)			
	O.D./I.D.			
Borehole Size:				
Sample Collection Equipment				
Drilling Sample Frequency				

D)

Field Screening:

Field Screening Intervals			
Device (Brand/Type/Spec)			
Calibration Sample Frequency			

E)

Well Development:

Method (Bailer, pump, etc.) _____
Minimum well volume to be withdrawn (Drilling Scenario "A") _____
Minimum well volume to be withdrawn (Drilling Scenario "B") _____
Minimum well volume to be withdrawn (Drilling Scenario "C") _____

Materials to be used _____
Procedure _____
Completion _____

F)

Laboratory Analytical:

Soil Samples:	Collection Equipment	
	Analytical Methods	
Water Samples:	Collection Equipment	
	Analytical Methods	
*Air Samples:	Collection Equipment	
	Analytical Methods	

G)

Waste Handling Procedures: Briefly describe how soil and water waste generated during drilling, development, and sampling activities will be handled, treated, and disposed.
Soil: _____
Water: _____

H)

Decontamination: Briefly describe decontamination equipment, methods, and procedures to be employed.

_____
_____
_____
_____

*Air samples to be taken at system start up.

III. WELL INSTALLATION

SVE Wells: _____ Number of SVE wells to be installed.

AS Wells: _____ Number of AS wells to be installed.

MW Wells: _____ Number of MW wells to be installed.

Provide the following information for a typical SVE well, Air Sparge well and Monitoring well:

	Typical SVE Well	Typical Air Sparge Well	Typical Monitoring Well
Well (Label and Denote SVE)			
Well Total Depth (TD)			
Screen Slot Size			
Screened Interval (SI)			
Grout Material			
Filter Pack Material and Size			
Drilling Scenario (A, B, or C)			

V. FIELD PERSONNEL

List below the consultant's personnel and any subcontracting firms that will be involved in the field work. Indicate each individual's name, company, position, title, and general duties. If resume documenting, education, experience, and safety training certification have not been provided with the original bid package for all those listed, submit the information with this worksheet. Attach additional sheets if necessary.

Name	Company	Position	Title	Duties
		Proj. Geologist		
		Field Geologist		
		Proj. Engineer		
		Env. Technician		
		Driller		Drilling/Well Installation
		Electrician		Electrical Hookup
		Surveyor		Well Survey

ATTACHMENT O
APPENDIX O-3

LETTER REPORT FORMAT

APPENDIX O-3
LETTER REPORT

Report Format

The Letter Report will include all information outlined below in the format and order described. The discussions should be concise. Use the Section titles and subtitles provided, and number each page.

SECTION 1.0: DISCUSSION

Provide a brief discussion of the work conducted at the site to date. Use the section titles and subtitles provided. Each page must be numbered.

Figure 1 Preliminary Site Base Map

A map generated from the full site survey which includes the area of the contaminant plume as detected during this phase of work. Include and label the location of all direct push probes, conductivity probes, soil borings, and wells. Include the location of all buildings, roads, underground and aboveground utilities, underground and aboveground storage tanks, pump islands, product lines, site surface conditions, and any other major structures in the area of the contaminant plume.

SECTION 2.0 DIRECT PUSH PROBE RESULTS

a) Include copies of each of the geologic logs generated from the direct push continuous core borings. Include geologic description and field screening results.

b) Include a copy of each of the conductivity probes.

SECTION 3.0 UNSATURATED ZONE TEST RESULTS

3.1 Soil Vapor Extraction Test

Provide a brief write-up of how the test was conducted.

Table 1: Soil Vapor Extraction Test Results

1) Vacuum readings at blower and at observation wells.

2) The field analyses of the SVE effluent over time in ppmv.

3) Airflow rate during test.

4) The permeability of soils to air.

5) Blower size/type used in test

6) Radius of Influence

Table 2: Soil Field Screening Results

Create a Field Screening Table for all wells and borings installed at this site.

Concentrations should be reported in parts per million (ppmv).

Table 3: Remedial Well Screened Interval Table

Create a screened interval table for each remedial well.

Figure 2: Zone of Remedial Influence Base Map

Use Figure 1 as a template to develop a map that depicts the proposed location of all SVE wells and the areal zone of influence of each.

Figure 3: Remedial System Layout

Use the Figure 1 as a template to develop a map that depicts the proposed location of all remedial wells, trenching, and remedial trailer location.

SECTION 4.0: DOCUMENTATION

Include all information requested in the following format. Do not reference or include in this section, any discussion, tables, photographs, maps, or other documents that are included in this report or any other report.

Appendix 1 Field Notes

Include copies of all notes and drilling logs maintained in the field. Include a copy of the complete surveyor's report in this appendix. Significant additional information is required, please review information located in this appendix.

Appendix 2: Access Agreement/Base Map

Provide a copy of the access agreement signed by both the Owner/Operator and the property manager (if different). Include a remedial base map of the project signed by the Owner/Operator and the facility manager (if different) with the proposed well locations, trenching locations, and location of the remedial trailer.

Appendix 3: Permits/ Completed Permit Applications / Permit Waivers

Provide copies of all permits required to operate the remedial system. Permits include, but are not limited to:

- Underground Injection Control (UIC)
- Construction Permit (Air)
- Flush Mount Well Waiver

ATTACHMENT O
APPENDIX O-4
Quattro-Pro Monthly Report Format

CD to be provided by KDHE Project Manager Upon Request

ATTACHMENT P

REDIP TRAILER & EQUIPMENT SPECIFICATIONS

REMEDIAL DESIGN IMPLEMENTATION PLAN (ReDIP) TRAILER & EQUIPMENT SPECIFICATIONS

Prepared for:

Kansas Department of Health and Environment
1000 SW Jackson, Suite 410
Topeka, KS 66612-1367

November 29, 2006

Prepared by:

Bluestem Environmental Engineering, Inc.
110 South Pearl Street
Paola, Kansas 66071
(913) 296-9393

TABLE OF CONTENTS

SECTION 1 CONSTRUCTION SPECIFICATIONS
1.1 Summary of Work and Special Conditions 1
1.2 Site Work 3
1.3 Well Installation.....3
1.4 Piping and Trenching.....4
1.5 Electrical 6
1.6 Equipment.....8
1.7 Remedial Plans.....18
1.8 Cut Sheets .....Appendix A

SECTION 1.0
CONSTRUCTION SPECIFICATIONS

1.1 Summary of Work and Special Conditions

1.1.1 These Remedial Design Installation Plan (ReDIP) specifications have been prepared for KDHE to assist the Owner/Operator in the purchase and installation of standardized soil vapor extraction (SVE) and in-situ air sparge (IAS) remediation systems. Sites identified for remediation were selected to fit a profile of river alluvium with relatively shallow depth to groundwater, and sediment permeability well within the optimal operational range for the remedial technologies that have been selected.

1.1.2 All systems will include six SVE manifold legs and twelve IAS manifold legs. The SVE and IAS manifolds will be constructed such that additional SVE and IAS legs can be installed onto the systems, if necessary

1.1.3 The standardized SVE/IAS system has been designed for sites that have three phase, 208-240 volt electrical service available.

1.1.4 The entire remediation system and enclosure shall be rated for use in Class I, Division 2, Group D environments and shall be certified by a Nationally Recognized Testing Laboratory (NRTL) firm. http://www.osha.gov/dts/otpca/nrtl/ Field certification of the control panel only or shop certification of control panel only is not considered an equivalent, and will not be approved.

1.1.5 A Programmable Logic Controllers (PLC) unit and sensors/switches shall be included.

1.1.6 Additional site characterization will be necessary to confirm the feasability of the selected remedial technologies, identify all source areas, and determine remedial well and screen placement. This characterization will be conducted with both direct push probe continuous sampling and electro conductivity (EC) logging. Prior to preparing the ReDIP Work Plan, the contractor shall review all available site data to determine the best location for the direct push survey. The contractor shall select a number of locations, sufficient to characterize the area of remediation, where the soil profile will be logged. The locations of the proposed direct push probes will be shown on the site base map included with the work plan.

1.1.7 Following review, modification (if necessary), and approval of the ReDIP Work Plan, work on the site can be initiated. Following approval of the work plan, the necessary environmental and construction permits or permit waivers, shall be obtained from the appropriate KDHE agency. See Section 1.1.15 for UIC permit application information.

1.1.8 The continuous core probes will be advanced to groundwater and the conductivity probes will be advanced to a depth 15 feet below the current groundwater elevation or until refusal. On occasion, a discrete soil sample from the saturated zone may be requested by the KDHE project manager to confirm the composition of a stratigraphic unit identified by the EC logging. Soil samples from the continuous core direct push probe will be logged and described. At least one composite sample from each core segment will be field analyzed. The

log from the core description will be correlated with the electro EC log. Copies of the geologic log and EC logs will be included with the Letter Report.

1.1.9 It will be the responsibility of the contractor to correctly interpret the EC logs and determine appropriate screened intervals for the remedial wells.

1.1.10 The full site survey should be scheduled to be completed for submittal with the Letter Report. The full site survey must be prepared by a Kansas-licensed land surveyor. The full site survey, at a minimum, shall include the location of all buildings and structures; limits and types of pavements; locations of curbs, driveways, and sidewalks; expansions joints in concrete pavements; pump islands, evidence of former pump islands, trenching, tank basins, and/or joints associated with the removal of former petroleum facilities; all above ground and underground utilities including meters, poles, vaults etc.; limits of landscaping; all existing wells located on the site; and the establishment of a permanent benchmark on the site. The full site survey shall show the property lines as indicated in the public records or available surveys. The full site survey will be included in the ReDIP Letter Report and shall be used as the format for all future base maps.

1.1.11 The contractor shall conduct short term pilot testing. In most cases, existing monitoring wells will be used as the extraction wells with other monitoring wells used as observation wells. In instances where an existing monitoring well is not available for use as an SVE extraction well, it will be necessary to install an extraction well and observation wells. Direct push probes may be completed as observation wells if necessary.

1.1.12 Pilot testing shall be performed in accordance with the testing requirements provided in the ReDIP RFP. Multiple short duration step tests should be conducted in order to assess the feasibility of soil vapor extraction across the source area(s). Pilot testing shall be conducted, by a field geologist or engineer overseen by the appropriate personnel (if necessary). Testing should be performed whenever possible on wells located in all source areas, any areas of significantly differing geology, and any sensitive areas where it is expected that air sparge remediation vapors could be a problem. Radius of influence (ROI) measurements (vacuum and formation flow rate) shall be collected from all available wells within the ROI area during each test. During the pilot testing, field graphs of extraction flow rate versus applied well head vacuum and radius of influence shall be prepared and used to determine if SVE is a viable remedial option at the site. If the pilot testing indicates that the subsurface conditions are not conducive to SVE, the contractor shall discuss the data with the KDHE project manager prior to demobilizing from the site. Pilot testing shall be conducted using a pilot test unit capable of extracting air from SVE wells over a range of 100 scfm at 60 inches of well head water column (“WC) to 250 scfm at 20”WC. All extraction flow rates shall be measured using a variable area flow meter. SVE extraction and all observation well head vacuum measurements can be collected using either an appropriately scaled manometer. Outlying well head measurements shall be collected. Field PID readings shall be collected on a minimum of one SVE off gas sample from each extraction well. The off gas air sample shall be collected from the well head using a vacuum pump or other vacuum device and prior to the moisture separator or dilution air valve.

1.1.13 Following completion of the full site survey, site data review, and SVE pilot testing, the contractor shall prepare the Letter Report for submittal to KDHE

1.1.14 The Letter Report shall include the results of the SVE pilot testing, the recommended remediation system layout shown on the new site plan; a table of the planned drilling (well ID, diameter, total depth, screen interval, and slot size); copies of permits based on the recommended layout; location of three phase electrical power; location of additional monitor wells recommended for remediation monitoring,

1.1.15 UIC permit application must not be submitted to the KDHE Bureau of Water prior to submitting the Letter Report.

1.2 Site Work

1.2.1 The contractor shall prepare a Site Safety Plan before beginning any work at the site, and all employees and subcontractors must be aware of the provisions of the plan. The contractor shall also be responsible for taking measures to ensure the safety of the public. This includes but is not limited to barricades, and signing.

1.2.2 The contractor will notify the Owner/Operator's representative, or current property owner and/or tenant, a minimum of one week prior to all construction. The contractor will also notify the KDHE project manager and appropriate KDHE personnel.

1.2.3 The contractor shall cooperate with the Owner/Operator's representative and other contractors in performing the work involved in the entire project.

1.3 Well Installation

1.3.1 The work in this section includes furnishing all labor, equipment, and materials required to drill 2-inch diameter IAS wells and 4-inch diameter soil vent wells. All work shall be performed in accordance with the drawings and specifications set forth in this document as well as with articles 12 and 30 of the KAR covering well installation.

1.3.2 The wells shall be installed in the locations shown in the drawings.

1.3.3 Should these locations need to be modified for any reason, the contractor must obtain permission from the Owner/Operators representative and KDHE project manager.

1.3.4 The IAS boreholes shall be drilled using hollow stem auger techniques and shall have a diameter of at least 8 inches. Approximate well depths, screen intervals, and screen slot sizes are shown on the drawings.

1.3.5 The wells shall be constructed with a coarse sand pack around the screened portion extending approximately two feet above the top of the screen. Coated bentonite pellets shall be placed on top of the filter pack and shall extend to the static water level, per KDHE ReDIP guideline 3.4.4.5, and a bentonite grout shall extend to just below grade. In no case shall cement grout be used.

1.3.6 The contractor shall ensure that all equipment is properly decontaminated before mobilization to the site and during drilling.

1.4 Piping and Trenching

1.4.1 All existing utilities may not be shown on the site maps, and the locations of the utilities shown are approximate. The contractor shall be responsible for locating, identifying and relocating and/or repairing all utility lines.

1.4.2 The contractor shall make all efforts to minimize impact on the site, and the owner's business while installing all portions of the remediation system. The contractor shall comply with all local, city, county, state, and federal regulations and codes, and obtain any permits related to this installation. All work and repairs shall be made in a timely and workmanlike fashion.

1.4.3 The contractor shall be responsible for cleanup and disposal of all waste materials generated during construction. Waste materials may be disposed onsite only if approved by the current property owner.

1.4.4 Trenches for piping, where required, shall be not less than 12 inches wide. The trenches shall be excavated such that the SVE line slopes downward from the remediation trailer to the well vault at a minimum slope of 1 inch per 20 feet of pipe. The SVE pipe shall be placed in the bottom of the trench on a minimum of 4 inches of fine to medium sand. If rock or boulders are present in the bottom of the trench, a minimum of 6 inches of embedding material shall be used. SVE pipes shall be separated from the trench walls and adjacent pipes by a minimum of 2 inches. IAS pipes may be place along side or above the SVE piping. IAS pipe shall be separated from the trench walls and adjacent pipes by a minimum of 2 inches. A minimum of 4 inches of sand shall be placed between the SVE pipe and overlying IAS pipes. After all pipes have been embedded in sand backfill to a minimum of 6 inches above the pipes, the sand backfill shall be compacted with a mechanical compacter capable of compacting the sand backfill to a minimum of 90% of the maximum standard Proctor density. After the pipes have been embedded and compacted, the remainder of the excavation shall be backfilled using flowable fill.

1.4.5 Flowable fill will be used as an alternative to sand for backfilling trenches. The contractor shall first bed the pipes in a sand material as detail in section 1.4.4. Once the pipes are properly bedded flowable fill will be used to complete backfilling of the trench. Prior to placing the flowable fill, the contractor shall first ensure that the pipes can support the weight of the fill during placement. Secondly, the contractor shall plan the rate and staging of the pours to prevent the pipes from becoming buoyant during placement of the fill. The flowable fill shall comply with the Kansas Department of Transportation Special Provisions to the Standard Specifications, 1990 Edition, Section 800 (90P-188-R2).

1.4.6 Backfilling shall not commence until the lines have been pressure tested, as detailed in Section 1.4.14 and the final slope of the SVE lines has been verified. The elevation of the top of the SVE pipelines shall be measured at the well head, at each change in direction, and at every joint in between. A map illustrating the final layout of the pipelines with final SVE

pipeline elevations shall be sealed by the project engineer and submitted to KDHE in the Summary Report.

1.4.7 All Polyvinyl Chloride (PVC) pipe shall be made in accordance with, and shall conform to, ASTM 1784, Type 1, Grade 1 for PVC compounds; ASTM D1785 and ASTM D2241 for PVC pipe; commercial standard CS-256 for PVC pipe; and ASTM D2466 for PVC pressure fittings.

1.4.8 All pipe shall be manufactured and tested in the United States, and be suited for a working pressure of 150 psi at 73° F.

1.4.9 Upon request, the manufacturer shall certify in writing that the pipe and couplings furnished comply with all specifications set forth above.

1.4.10 The piping shall be pressure tested in accordance with the provisions of the KDHE ReDIP Guidance document current at the time of the ReDIP bid.

1.4.11 All pipe shall be properly bedded in clean sand for its entire length. The interior of all pipe shall be thoroughly cleaned of all foreign materials before being lowered into the trench and shall be kept clean during laying operations. Pipe shall not be laid in water or when trench or weather conditions are unsuitable for such work. In all cases, water must be kept out of the trenches until the material in the joints has hardened.

1.4.12 Installation of all PVC pipe shall be in accordance with ASTM D2774. All joints shall be socket-type fitting and shall be solvent cemented in conformance with ASTM D2855. The PVC primer shall meet requirements of ASTM F656. The solvent cement shall meet the requirements of ASTM D2564.

1.4.13 All materials shall be handled, cut, and laid in a manner such that the material shall not be damaged or become damaged. All pipes shall be inspected for defects or damage before bedding in the sand backfill.

1.4.14 Each IAS/SVE buried pipeline shall be subjected to a positive pressure test both prior to backfilling and after backfilling. Whenever possible this should be done prior to replacement of any pavement. Pressure testing shall include but not be limited to, the pipe and all fittings between the remediation trailer and the well. Pipe segments shall be left exposed for pressure testing, unless the installation contractor determines partial backfilling is required for safety or to keep the site operational. Both ends of the pipe will be sealed and the pipe will be pressurized to the lesser of 20 psig or one and one half times the system design pressure. The pressure source shall be isolated from the pipeline by means of a valve or disconnect. The duration of the test shall be a minimum of ten minutes. If after 10 minutes the pressure loss does not exceed 10 percent of the starting value, the test shall be successful. If the final value exceeds 10 percent, the line shall be retested and each joint shall be examined for leaks using a solution of soapy water or a commercial leak test solution. On active sites it may be necessary to test the pipelines in segments to keep the site operational. If the pipe line is tested in segments the pressure loss, in any segment, should not exceed 5 percent of the starting pressure. Upon completion of installation the full length of the pipeline shall be

pressure tested. The pipeline will be successful if the pressure loss does not exceed 10 percent of the starting value.

1.4.15 The contractor shall be responsible for all settling of backfill, or pavement which may occur within the lifetime of this project.

1.4.16 All driveways, roadways, parking lots, yards, fences, and other property shall be restored to original condition.

1.4.17 Yards shall be graded and seeded with the same type of grass as original ground cover.

1.4.18 Grading, surfacing, and other types of property restoration shall be completed in a timely manner and to the satisfaction of the Owner/Operator's representative.

1.5 Electrical

1.5.1 The control panel will be located outside of the trailer in a non-hazardous area, but will interface with equipment located in a Class 1, Division 2, Group D area. All electric components of the remediation system located inside of the trailer shall meet or exceed Class 1, Division 2, Group D requirements and shall be third party inspected by a NRTL lab or be UL approved for this environment. All equipment shall be classified for use in Class 1, Division 2, Group D environments and shall be third party inspected by a NRTL lab or be UL approved for this environment. All work shall meet the current National Electric Code and shall comply with all city, county, state, federal and utility company rules, regulations and ordinances applicable for the location and type of equipment to be installed. The trailer, equipment and components in its entirety will meet NRTL certification.

1.5.2 Prior to ordering equipment, the contractor shall obtain all electrical permits and inspections required for the installation of electrical service to the remediation trailer. For 230 volt, 3 phase power, the contractor will indicate whether it is "DELTA" or "Y" service.

1.5.3 The thermal overloads on the SVE and IAS motor starters shall be sized appropriately for the motor sizes installed when the trailer is purchased.

1.5.4 The contractor shall have a metered electrical service established and installed in close vicinity of the remediation trailer. The service shall supply 120% of the maximum electric demand of all equipment installed at the site, or 150 amps, whichever is greater. The source of electricity shall be shown on the site survey.

1.5.5 All electrical boxes shall be NEMA type enclosures, and shall be appropriate for their location and function.

1.5.6 On the front of the trailer shall be mounted a 200 amp NEMA 3R load center, that includes a 150-amp (or larger) master circuit breaker, and the individual branch circuit breakers as indicated on Drawing 3 of the ReDIP Design Drawings.

1.5.7 All controls shall be located within a NEMA 4 enclosure with minimum dimensions of 36” x 36” x 12”. The control panel shall be located on the front of the trailer. The exterior door shall include a locking mechanism to prevent access by unauthorized individuals.

1.5.8 All HOA switches and hour meters shall be located on an interior swing panel of the control panel. The swing panel shall be locked using an electrical interlock that restricts access to the panel while the system is energized.

1.5.9 Programmable logic controllers will be used in the control circuitry.

1.5.10 Electrical equipment, wiring and conduits shall be constructed in a neat and orderly manner. All wiring shall be located in wire channels.

1.5.11 All wiring shall be contained in conduits appropriate to Class 1, Division 2, Group D locations.

1.5.12 All equipment shall be protected by appropriately rated circuit breakers. All equipment shall be grounded as required by the National Electric Code and utility company requirements.

1.5.13 Conductors shall generally be stranded copper with 600 volt-rated insulation. Branch circuit wiring shall be a minimum size of # 12 type “THWN” stranded copper, unless noted otherwise. Low voltage control wire shall be type “THWN” # 16 gauge minimum stranded copper unless noted otherwise. All connections to service equipment shall be solderless lugs or terminal strips. All splices, taps, and connectors to equipment shall be solderless butt connections or wire nuts as permitted by code.

1.5.14 Branch circuits shall be protected by circuit breakers. Circuits shall be quick-make, quick-break on manual and automatic operation. Circuit breakers shall have a positive trip indication, as well as clear “Off” and “On” indicators.

1.5.15 All exterior electrical outlets shall be either Ground Fault Circuit Interrupt (GFCI), or protected by a GFCI circuit breaker. All GFCI receptacles or circuit breakers shall have a test position and a manual reset.

1.5.16 The electric service shall be separate from the Owner / Operator facility. The electrical service is to be setup by the contractor, but the billing(s) must be set up as follows:

Site Name: Site Code
KDHE-STS-D. Caldwell
1000 SW Jackson, Suite 410
Topeka, KS 66612-1367

1.5.17 The local telephone, cell, or cable service shall be set up through David Caldwell.

1.6 Equipment

1.6.1 The intent of the ReDIP program is to purchase, install, and operate SVE/IAS remediation trailers at UST sites that fit the profile of relatively shallow river alluvium throughout Kansas.

The intent of this ReDIP standard design provided in these specifications is to allow KDHE to purchase similar SVE/IAS trailers from multiple vendors, with the layout, equipment, and controls similar and interchangeable. These trailers may be used on multiple sites.

1.6.2 Specific equipment has been identified in this section which meets the performance specifications. Equipment substitutions proposed by the contractor shall meet or surpass the specifications. Proposed equipment substitutions shall be provided by the contractor to KDHE together with cut sheets of the proposed equipment. Any substitutions must be approved in writing by KDHE prior to construction of the trailer. All substitutions must still be NRTL certified.

1.6.3 SVE Equipment Requirements

1. The SVE blower shall be a regenerative blower with an explosion proof motor with permanently sealed ball bearings capable of operating on 3-phase electric system with voltages between 208 and 240 volts. The blower shall be constructed of a vacuum impregnated, cast aluminum housing, cover, impeller and manifold. The blower shall have a decibel level (3 feet from the blower) of 87 or less. The blower air temp rise in the operating ranges shown in the following graph shall be less than 70°C and the motor winding temperature rise shall be less than 50°C. A Rotron Model EN858BD72WL meets the specifications.

2. A vacuum relief valve to protect the blower shall be installed between the blower and the in-line filter. The relief valve shall be of mechanical type and be field adjustable. A Rotron Model 523230 vacuum relief valve meets the vacuum relief valve specifications, or equivalent.

3. An in-line filter with a minimum of 8 square feet of surface area shall be installed between the moisture separator and the vacuum relief valve. Either a Solberg model CSL-335P-400 with Solberg model 335 filter or a Rotron model 516465 with model 515135 filter element meets the filter specifications. There shall be a 0-20 inches of water column Dwyer magnahelic gage located across the filter assembly to monitor the condition of the filter. A vacuum differential pressure switch shall be located across the inlet and outlet of the filter. The position of the switch shall be monitored by the PLC

4. A moisture separator, using cyclonic separation to remove the entrained water shall be installed between the SVE manifold and the in-line filter. The moisture separator shall consist of a heavy gauge, cold rolled, steel drum or cylinder with a minimum liquid storage capacity of 40 gallons. The interior of the separator shall have either an epoxy powder coated interior lining or a corrosion resistant epoxy-phenolic lining. The coating must be applied after welding. The headloss through the separator shall be less than 1 ½ inches of water column at a flow rate of 350 cfm. The exterior portion of the separator shall either be epoxy painted or epoxy powder coated. The lid of the moisture separator shall be reinforced with steel to prevent deformation. The separator shall have a minimum of two welded or plastic bulkhead fittings in the side wall of the separator. One fitting shall be located within two inches of the bottom of the separator sidewall to

serve as a water drain and shall have a minimum diameter of 1 inch. The second fitting shall be located in at the midpoint of the sidewall for an explosion-proof float switch and shall have a minimum diameter of 2 inches. The SPDT float switch shall be located horizontally in a 2 inch steel tee such that the ball of the float switch is not located inside of the separator wall. A Rotron model MS500BS separator and a Dwyer Flotect model L6EPB-B-S-3-0 switch, or equivalents, meet the specifications.

5. A fresh air dilution intake shall be installed on the manifold to control the applied vacuum to the SVE wells. The dilution valve system shall include a 3-inch diameter brass ball valve or 3-inch cast wafer butterfly valve and an intake filter. The filter shall remove particles 5 microns or larger. A total of three additional filters shall be provided with the remediation system. A Fuji model F- 89 filter/silencer meets the specifications or equivalent.

6. The SVE wells will be connected to the remediation system by means of a manifold distribution system constructed of 4-inch diameter schedule 40 PVC pipe header with 2-inch schedule 40 PVC pipe legs which will in turn be expanded to connect to the 3-inch buried horizontal piping. The 2-inch pipe section shall be no longer than is required for the proper installation of the variable area flowmeters. To allow the most room for possible future expansion, and to ease any possible future modifications of the manifold, 4x2 PVC clamp on saddles (Spears model 466-420 or similar) will be used to connect the 2-inch diameter schedule 40 PVC pipe legs to the header. The manifold shall also be constructed with an appropriate number of unions or Fernco couplers to allow removal and replacement of components. Each leg should be constructed such that at any time it can simply be fully removed from the header and replaced. Each leg of the manifold will have a self sealing, or quick connect sample port in the 3” elbow exiting the trailer.

7. The flow meter located in each leg shall be a variable area flow meter with a 2-inch NPT fitting with a minimum/maximum range that correlates with the 25 to 250 scfm of the Key Instruments variable area flow meter. The flowmeter shall be installed according to the manufacture’s recommended specifications. A Key Instruments model 5A81 flow meter, or equivalent, meets the specifications.

8. The control valve shall be a forged brass ball valve with a temperature rating of -40 to 370 degrees F and a pressure rating of 600 psi WOG. A Dynaquip VMH2.A9 2 valve meets the specifications or equivalent.

9. Each manifold leg shall include a self-sealing, or quick connect, sample port for collecting vacuum measurements and air samples installed in the 3-inch elbow exiting the trailer. A Petersen Pete’s Plug model 31-100 meets the self-sealing sample port specification or equivalent. The Pete’s Plug pressure gauge adapter Petersen model 31-500 adapter meets the specification. All Sample ports throughout the system should be of the same type and size. Each remediation system shall be supplied with three pressure gauge adapters.

10. A vacuum differential pressure switch (see PLC section) shall be located in the manifold, prior to the moisture separator. The position of the switch shall be logged by the PLC.

11. The SVE discharge stack shall be constructed of 3- inch diameter schedule 40 steel pipe. The exterior portion of the 3-inch steel stack shall be constructed as shown on the ReDIP Design Drawings. The stack shall discharge a minimum of 25 feet above grade. The stack shall be braced at the top of the trailer as shown on the ReDIP Design Drawings to prevent excessive sway. A sample port consistent with the other sample ports shall be installed in the stack.

12. A Dwyer model 477-5-FM digital manometer (0-553" W.C. and 0-20 psig) and a Dwyer model 2002 (0-2" W.C.) magnahelic gauge shall be purchased by the contractor for dedication to the site. The equipment shall be stored onsite and kept in good maintenance and readily available for use. Each gauge shall be equipped with tubing and the appropriate fittings for the sample ports.

13. The SVE system shall either automatically drain or automatically pump out the contents of the moisture separator upon reaching the high fluid level in the separator.

1.6.4 IAS Equipment Requirements

1. The IAS compressor shall be a rotary vane compressor with an explosion proof motor with permanently sealed ball bearings and capable of operating on 3-phase electric system with voltages between 208 and 240 volts. The compressor shall be rated for continuous duty and shall be capable of generating 60 icfm @12 psi. The blower shall be housed in a sound attenuating enclosure and noise levels associated with the compressor shall be less than 79 decibels. The compressor shall have an integral air cooler and pressure regulator built into the unit and shall have internal air filters on the inlet and discharge sides of the compressor. Each trailer system shall be supplied with two additional sets of carbon vanes and two additional sets of internal filters (3 per compressor) for each compressor. A Becker Model KDT 3.100 (10 HP EXP motor) or a Rietschle DTA100 (10 HP EXP motor) meets these requirements. Aftermarket vanes and filters are not an acceptable substitute. Note: Becker and Rietschle compressor are normally supplied with TEFC motors. The Becker and Rietschle compressors with EXP motors are a special order unit. Substitutions of alternative equipment must be approved by KDHE prior to construction. All requests for substitution must include the manufactures specification sheets, a cost itemization summary that includes costs for all items related to the substitution (compressor, silencers, after coolers, pipe fittings, electrical, etc.) and all costs related to operation of the equipment (filters, oil, grease, labor, etc.), and a short written summary discussing the purpose of the substitution, the benefits of, and the deficiencies of the new equipment.

2. The air sparge compressor will be outfitted with an external air intake filter. The filter housing shall be steel, with a baked enamel finish. The intake filter shall be a Solberg model CSL-851-200HC, or equivalent.

3. A wye-pattern check valve shall be located on the compressor discharge line to prevent backflow through the compressor. The check valve shall have a bronze body, seat bonnet, and hinge assembly and shall be rated for 125 psi steam pressures. A Nibco wye-

pattern check valve with 1½-inch FMPT connections, or equivalent, meets the specifications

4. Two pressure relief valves shall be installed between the compressor and the electrically actuated control valves to prevent dead-heading of the compressor. Each relief valve shall be all brass with a stainless steel spring and a nylon poppet and nitrile seals. Each valve shall have ¾-inch MPT and shall be field adjustable and rated for a flow rate of 54 scfm. A Control Devices model VR-75 valve, or equivalent, meets the specifications.

5. The compressed air shall be diverted from one bank of the IAS manifold to the other by means of two electrically actuated control valves. The valves shall have a flow coefficient (Cv) value, for air at the actual operating conditions, greater than 19. The valves shall also be slow opening taking a minimum of 10 seconds to fully open. Two, 1½-inch diameter, electrically actuated two piece brass ball valves shall be used to direct the compressor air flow from one set of manifolds to the other. The valve body, end cap and stem shall be constructed of brass; the ball shall be chrome/nickel platted brass; and the seat and stem seal shall be PTFE. The valve shall be rated for pressures up to 600 psi WOG and temperatures up to 300 degrees F. The valve actuator shall be power by 115V, 60 Hz, single phase electricity. The actuator shall open and close the valve in 10 seconds or greater. The electric actuator shall be housed in an NEMA 7 rated enclosure. A Nibco TM-585-70-66 ball valve with a Nibco series 300 electric actuator or an Apollo AR series ball valve with CS series electric actuator does meet these specifications. Both actuators carry a CSA approval.

6. A pressure switch and a 0-30 psig liquid filled pressure gauge shall be located between the electric actuated control valve and each manifold. The position of the pressure switch shall be logged or displayed by the telemetry or PLC system.

7. A 1½-inch diameter, ¼-turn brass bypass ball valve shall be located at the end of each sparge manifold. The control valve shall be a two-piece, screwed, forged brass ball valve with a temperature rating of -40 to 370 degrees F and a pressure rating of 600 psi WOG. The valve body shall be forged brass; the stem shall be nickel plated brass; the ball shall be chrome plated brass; the washers and stem seals shall be PTFE; and the ball seat shall be glass reinforced PTFE. A Dynaquip VMH2.A9 1 1/2 valve, or equivalent, meets the specifications.

8. The bypass ball valve shall terminate with an exhaust silencer to reduce the air discharge sound levels to below OSHA levels. The silencer shall be constructed of a 40 micron, porous, sintered bronze element directly bonded to nickel plated steel pipe thread fitting. The silencer shall be rated for a 300 psi pressure. A Dayton pneumatic exhaust muffler (Grainger part # 6F601), or equivalent, meets the specification.

9. The wells shall be controlled by means of a manifold distribution system constructed of 1½-inch steel pipe, except where indicated otherwise. The manifold shall be constructed with sufficient unions to allow components to be replaced. Each leg of the manifold will consist of the following components:

- A ½-inch diameter, ¼-turn brass ball valve
- A variable area flow meter;
- A self-sealing sample port;
- A 0-30 psig liquid filled pressure gauge
- All other necessary fittings and unions.

10. The control valve for each sparge leg shall be a two-piece, screwed, forged brass ball valve with a temperature rating of -40 to 370 degrees F and a pressure rating of 600 psi WOG. A Dynaquip VMH2.A9 1/2 valve, or equivalent, meets the specifications.

11. The variable area flow meter for each sparge leg shall have a range of 1 to 12 scfm. The body shall be permanently marked with the flow scale in scfm units. The float and support rod shall be 316 stainless steel. The meter shall be rated for temperatures of 180 degrees F at a pressure of 30 psig or greater. The pressure drop through the meter shall be less than 2 psi at the maximum flow. A Blue-White model F-45376GHN-8 meter or equivalent meets the specifications.

1.6.5 Remediation Trailer

1. The trailer shall house the blower, the moisture separator, the SVE and IAS manifolds, and all gauges and controls related to these components. The equipment shall be enclosed in a trailer of sufficient size to allow easy access for operation and maintenance. The trailer shall have the following minimum interior dimensions; length = 16.25 feet, width = 7.5 feet, height = 6.33 feet. The trailer shall have double rear; side hinged doors and shall not have a side access door. The trailer shall have an all-steel frame and shall have 0.030 smooth aluminum walls and roof. The trailer shall have a tandem axle rated for 3500 pounds, electric brakes, and 14” bias ply tires. The trailer shall have a Gross Weight Vehicle Rating of at least 7000 pounds and shall have a payload capacity of 4500 pounds or greater. The floor shall consist of two layer of ¾-inch plywood and shall be supported on 6” I beam supports spaced at 24 inches or less along the length of the trailer. The trailer shall be factory insulated with R5 styrofoam insulation in the walls and R5 FG insulation in the ceiling. The ceiling and doors shall be finished with wood paneling and the walls shall be finished with 3/8-inch thick plywood. The trailer shall bear a National Association of Trailer Manufacturers (NATM) decal signifying the trailer manufacturer has complied with established industry standards and with U.S. DOT federal motor vehicle safety standards (FMVSS). A Pace Model JT816TA2 trailer with options meets the specifications, or equivalent.

2. The trailer will include a minimum 3600 watt EXP convection heater to prevent equipment from freezing in the event that the SVE blower or sparge compressor shuts down. The heater shall have a T2A temperature rating and the housing shall be constructed of heavy gauge steel with an epoxy paint finish and the top of the enclosure shall be sloped to prevent objects from being placed on the heater that would obstruct the air flow. The heating element shall have a capacity of 12,280 Btu per hour and shall be a finned tubular element with high grade resistance wire in MGO centered in a sheath with 1-1/8-inch diameter fins. The heater shall be mounted a minimum of 8 inches above the

floor to allow proper air circulation. A Qmark model ICG36041 hazardous location electric convection heater meets the specifications, or equivalent.

3. The trailer shall be vented using a 16-inch diameter hazardous location exhaust fan with a ¼ Hp motor. The fan shall be constructed with a heavy duty steel frame and shall have four spark resistant cast aluminum fan blades capable of moving 2500 cfm of air. The fan and the aluminum fan housing shall be mounted to the trailer steel wall supports. The fan shall be provided with the necessary OSHA compliant intake guard installed on the interior of the trailer. A 16-inch shutter style exhaust louver shall be installed on the exterior of the trailer. A Dayton model 3XK37 fan meets the specifications, or equivalent.

4. Two, 70 watt, wall-mount, explosion-proof lights shall be located in the trailer. One light shall be located on the SVE wall of the trailer and the second light shall be located on the front wall of the trailer. The lights shall be constructed of epoxy coated aluminum. The lights shall have a 70 watt, high pressure sodium HID lamp with an initial light output of 6400 lumens and a rated life of 24000 hours. An Appleton model MW7075-120 light meets the specifications, or equivalent.

5. When the trailer has been positioned onsite it shall be placed on jack stands and the tires shall be removed and stored in the trailer. The jack stands shall in turn be placed upon a 12-inch square concrete or metal base sufficient to prevent settling of the jack stand. The trailer shall be anchored to the ground with trailer anchors and tie down straps sufficient to meet local code requirements.

6. The trailer-enclosed system shall be situated on the site as indicated in the approved site drawing provided with the letter report.

1.6.6 Controls

1.6.6. Programmable Logic Controller

1. The layout of the control panel shall follow a logical flow process with like equipment grouped together and utilize a Programmable Logic Controller (PLC) with Operator Interface and Off Site Software for remote access. The specifications for the control enclosure are provided in Section 1.5 of these specifications.
   a. PLC Shall be capable and include the following:
      i. Internal DC power supply
      ii. Built in clock and calendar
      iii. Two communication ports
      iv. A minimum of 36 Inputs or Outputs that can be Digital or Analog.
   b. Operator Interface shall be mounted on Control Panel Inner Door. Interface will have a minimum of a (2) two line display to allow user to control and view system status including:
      i. Start or Stop system
      ii. Reset Alarm
      iii. View current Alarms
      iv. View Hours of operation for each motor

v. Change digital input Timers
vi. View all analog input numerically

2. Motor Starters for the SVE and IAS motors shall be 50 Amp, 3 pole, IEC motor starters rated for 30 million operations. The starter shall include one normally open and one normally closed auxiliary contactor. The contactor shall be capable of accepting thermal overloads units with amp ratings as low as 23 amps. A Telemecanique model LC1D50G7 contactor meets the specification, or equivalent.

3. Each motor starter shall be provided with an appropriately rated thermal overload designed for the motor starter for both the blower and compressor initially supplied with the trailer.

4. Definite Purpose Contactors shall be provided for the heater circuit and the light and convenience outlet circuits. The contactors should be 120 volt, single phase, 2 pole, 30 amp, double break units. Square D model 8910DPA32V02 contactors meet the specifications, or equivalent.

5. Power to the exhaust fan shall be controlled using a 25 amp, single pole, normally open power control relay. An Omron model G4B112T1FDUSRP power relay meets the specification, or equivalent.

6. Temperature sensors for starting and stopping the heater and exhaust fan shall be located inside of the trailer enclosure and shall be rated for hazardous locations. The thermostat shall have a control range of 50 to 90 degrees F and a bi-metal actuator. A Columbus model EPETD8DJ thermostat meets the specification, or equivalent.

7. A transient voltage surge protector and noise filter shall be provided in the control panel to protect the control circuitry. The suppressor shall be a 120 volt, single phase unit rated for 15 amps. The suppressor shall have a 40kA surge rating, a short circuit current rating of 22,000 A maximum, and provide up to -75 dB noise attenuation. The unit shall include an LED status indicator. A Square D model TVS120LC15 suppressor/filter meets the specifications.

8. Timers shall be provided in the PLC to allow the operator to manually set times for the sparge ball valves and for the moisture separator auto-drain. These times shall be adjustable from an Operator Interface mounted on the front of the Inner Swing panel in the control panel.

   a. The sparge ball valves will be switched with repeat cycle timer PLC logic shall allow the operator to set the repeat cycle to ranges between 1 minute and 9999 minutes. Each valve can also be set to always ON or OFF.
   b. The auto-drain system PLC Logic shall shut down the SVE blower when the water level in the moisture separator reaches the high level mark. The PLC Logic timer shall restart the SVE blower, at an operator determined time interval, after the float switch returns to the normal position.

9. DC power as required shall be provided by a separate DC power supply which includes an integrated overload, short circuit, overvoltage and undervoltage protection. The power unit shall operate on 110 VAC and shall output a minimum of 1.3 amps, 24 VDC power. A Square D model ABL7RM2401 DC power supply, or equivalent, meets the specifications. If the PLC system provides sufficient DC power to operate the required sensors the DC power supply may be omitted.

10. Equipment operation switches shall be provided for the SVE motor, for the IAS motor, and for the trailer lights. The motor switches shall be HOA switches (Hand, Off, Auto) which control the motor starter contactors and the light switch shall be an On/Off switch which controls power to the EXP lights and the exterior convenience outlet. All switches shall be located on the exterior side of the swing panel to allow observation with entering the energized portion of the control panel.

11. At a minimum, pilot lights shall be provided to indicate system power (yellow), one each for operation of the SVE and IAS motors (green) and the interior light (green). All lights shall be located on the exterior side of the swing panel to allow observation without entering the energized portion of the control panel.

12. The PLC shall record and datalog daily and display hour meters for the SVE and IAS motors. Operator Interface shall show hrs of operation from 1 to 99,999,999 hrs. PLC Hour meters/datalog storage shall not be field resetable. All motor starters will be wired such that in any alarm including starter overload run time hours are not recorded.

13. Two differential vacuum switches shall be connected to the PLC to monitor performance of the SVE system. One switch shall be connected to the manifold piping to indicate an alarm when the line vacuum in the manifold drops below 5 inches of water column (“WC) and the second vacuum switch shall be located across the inline filter to indicate an alarm when the pressure differential across the filter exceeds 10 “WC. The SPDT switch shall be encased in a NEMA 1 enclosure and shall have temperature limits of 0 to 140 degrees F or greater, a pressure limit of 45 “WC continuous, and a range of 4 to 20 “WC. The switch power requirements shall be 24 VDC. The Dwyer 1950 series pressure switch, or equivalent, meets the specifications.

14. Two differential pressure switches shall be connected to the PLC to monitor performance of the IAS system. One switch shall be connected to each leg of the IAS manifold, after the ball valve to indicate an alarm when the line pressure in the manifold drops below 4 psi. The SPDT switch shall be encased in a NEMA 1 enclosure and shall have temperature limits of -40 to 140 degrees F or greater, a pressure limit of 35 psi continuous, and a range of 3 to 15 psi. The switch power requirements shall be 24 VDC. The Dwyer 1950 series pressure switch, or equivalent, meets the specification.

15. An amperage sensor, located on one of the three power legs from both the SVE and IAS motors, shall be connected to the PLC to display the amperage draw of each

motor. The current sensor shall incorporate the current transformer and signal conditioner into a single package. The input power shall be 12-30 VDC and the output signal shall be 4-20 mA or 0-5V. The unit shall have jumper selectable ranges of 10, 20 and 50 amps with an accuracy of 1% FS or less. The Love model CT40-100 current transformer meets the specifications, or equivalent.

16. Each switch in the hazardous area shall be routed through an intrinsic safety isolator to provide a non-sparkable current to the switch located in the Class 1 Div 2 (hazardous) area. The dual channel, SPDT, isolators shall utilize galvanic isolation to isolate the hazardous and non-hazardous areas. The DIN mounted isolator shall be powered by an 18-35 VDC power supply and shall output an 8 VDC current to the switch located in the hazardous area. A Stahl model 9251/02-40 isolator, or equivalent, meets the specifications.

17. Remote PLC Access: The PLC can be accessed via a Remote Access System that allows full remote control of each system real time.

    a. System display to consist of a PID view, with remote control of each motor and valve.

    b. System alarms can be reset; system can be started or stopped via this interface.

    c. System display shall include hour meter readings for each motor, amperage of each motor, position of each switch, status of each alarm.

    d. The PLC shall be capable of storing a daily summary report for 60 days which can be downloaded on demand. Information to be stored in a comma delimited format which can be easily uploaded to an Excel spreadsheet. The daily summary report shall contain the following information:
    - hourmeter value for SVE motor
    - hourmeter value for Sparge motor
    - system operating alarm status
    - motor amperage values

    e. The PLC shall store the alarm history for the last 20 alarms, display these alarms on the offsite system and allow the user to screen capture the display.

    f. The system shall contain a Setup Screen to view and reset timer values for the valves and moisture separator discharge.

    g. The system shall deliver:

    1. A daily E-Mail will be sent to multiple recipients reporting system status, hourmeter values, analogue values etc.
    2. An immediate Alarm notification of any and all alarms sent via email to multiple recipients.

h. The remote system shall be equipped for access via an internet connection with no dedicated phone line required at the operators location, using one of the following on-site communication options:

- unlimited dial up access to ISP via site phone line
- DSL connection via site phone line
- Cable modem connection
- Cellular modem connection (where service available)

i. The user will have the option of loading site specific software on their PC for access over the internet or accessing the site via a remote Server via internet browser.

1.7 Remedial Plans

Drawing 1	*SVE Process & Instrumentation Diagram*
Drawing 2	*IAS Process & Instrumentation Diagram*
Drawing 3	*Electric Line Diagrams*
Drawing 4A	*Electric Logic and Telemetry Diagrams*
Drawing 4B	*Electric Logic and Telemetry Diagrams*
Drawing 4C	*Electric Logic and Telemetry Diagrams*
Drawing 5	*Remediation Trailer Plan View*
Drawing 6	*SVE Elevation (Trailer left side)*
Drawing 7	*IAS Elevation (Trailer right side)*
Drawing 8	*Stack Construction Detail*
Drawing 9	*Pipe and Trench Detail*

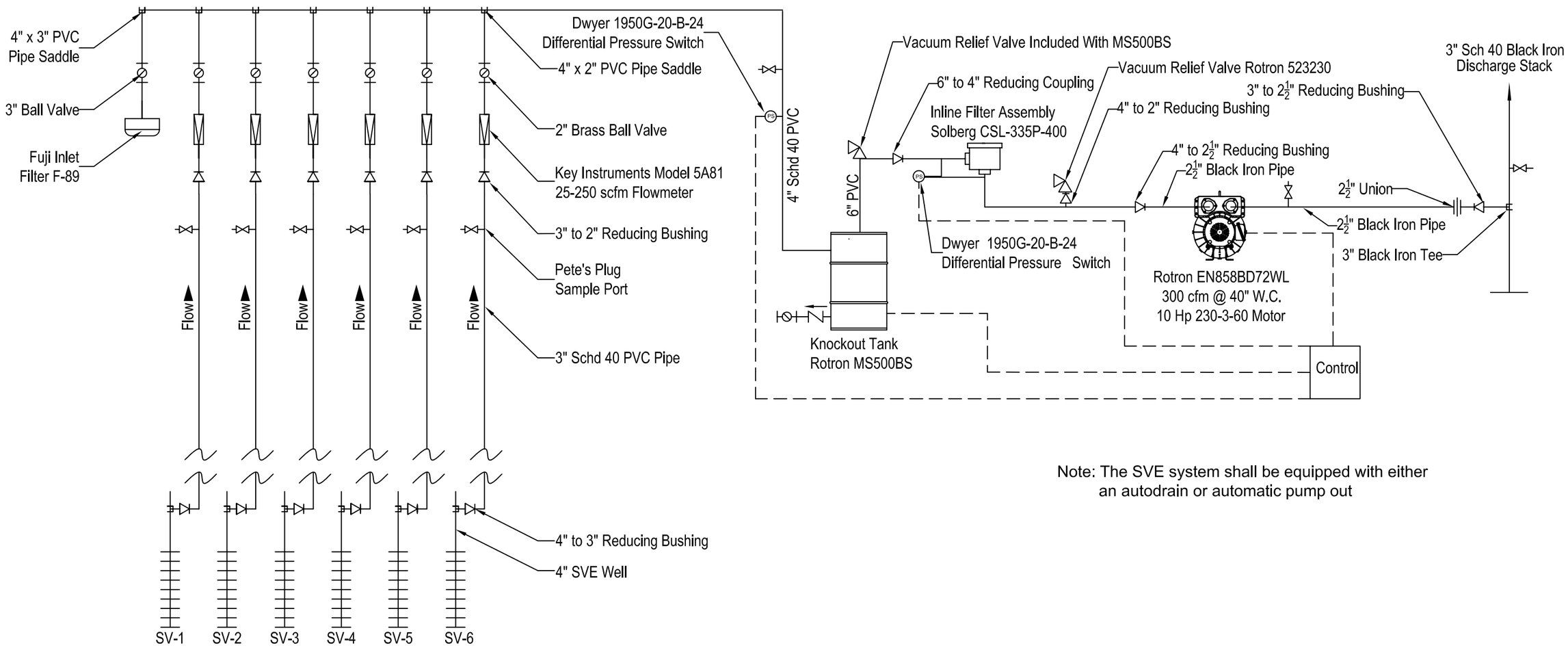

Note: The SVE system shall be equipped with either an autodrain or automatic pump out

Bluestem Environmental Engineering

Drawing 1
SVE Process & Instrumentation Diagram
RDIP Remedial Trailer Design Package

Drawn By: SGE II	Date: 11/28/06	Rev: 0	Rev. Date: NA
Reviewed By: Sidney Edelbrock II, P.E.	KDHE Code:		
Scale: Not To Scale	File: RDIP Drawings.dwg		

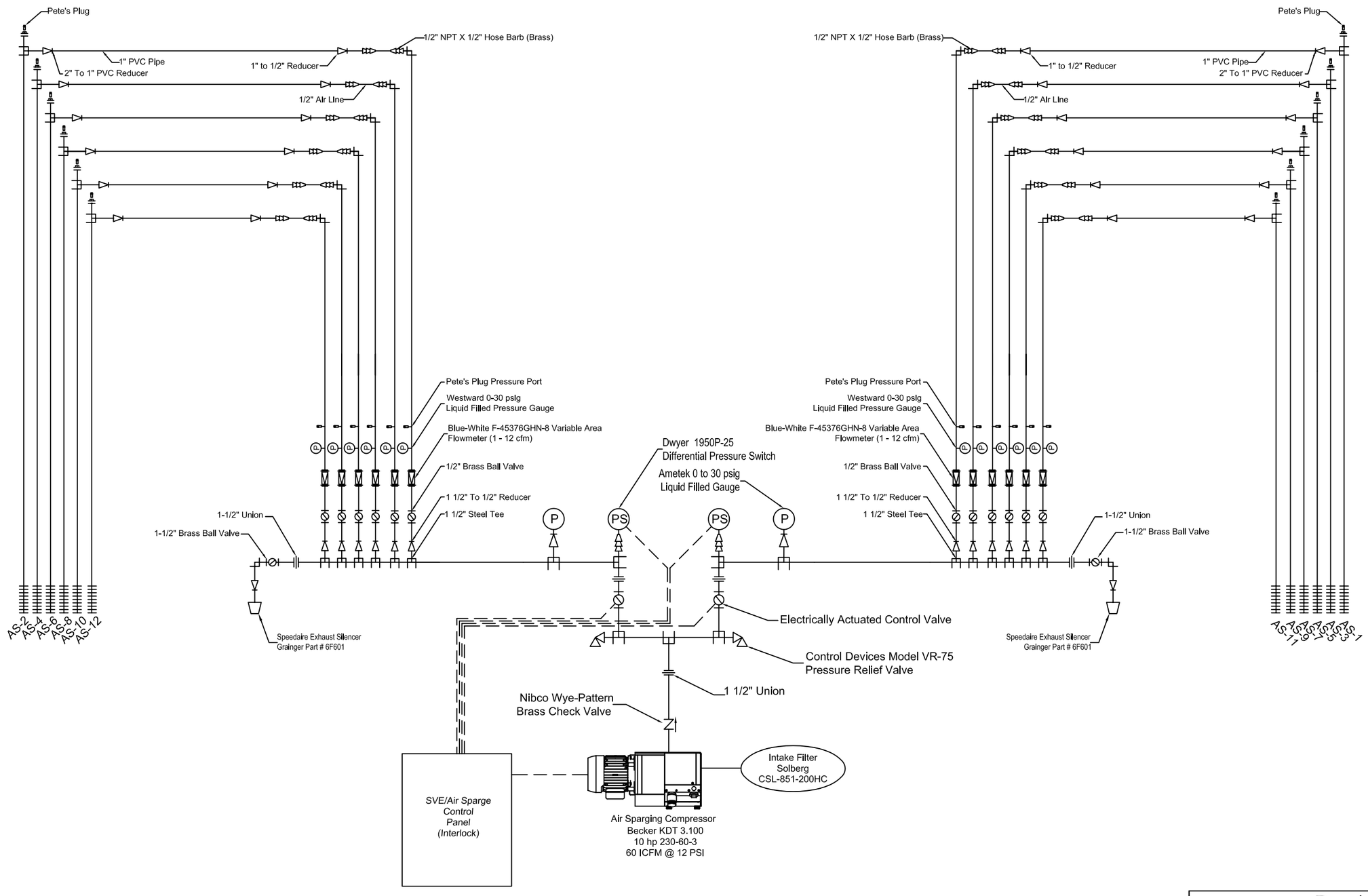

Bluestem Environmental Engineering

Drawing 2
IAS Process & Instrumentation Diagram
RDIP Remedial Trailer Design Package

Drawn By: SGE II	Date: 04/21/04	Rev: 0	Rev. Date: NA
Reviewed By: Sidney Edelbrock II, P.E.	KDHE Code:		
Scale: Not To Scale	File: RDIP Drawings.dwg		

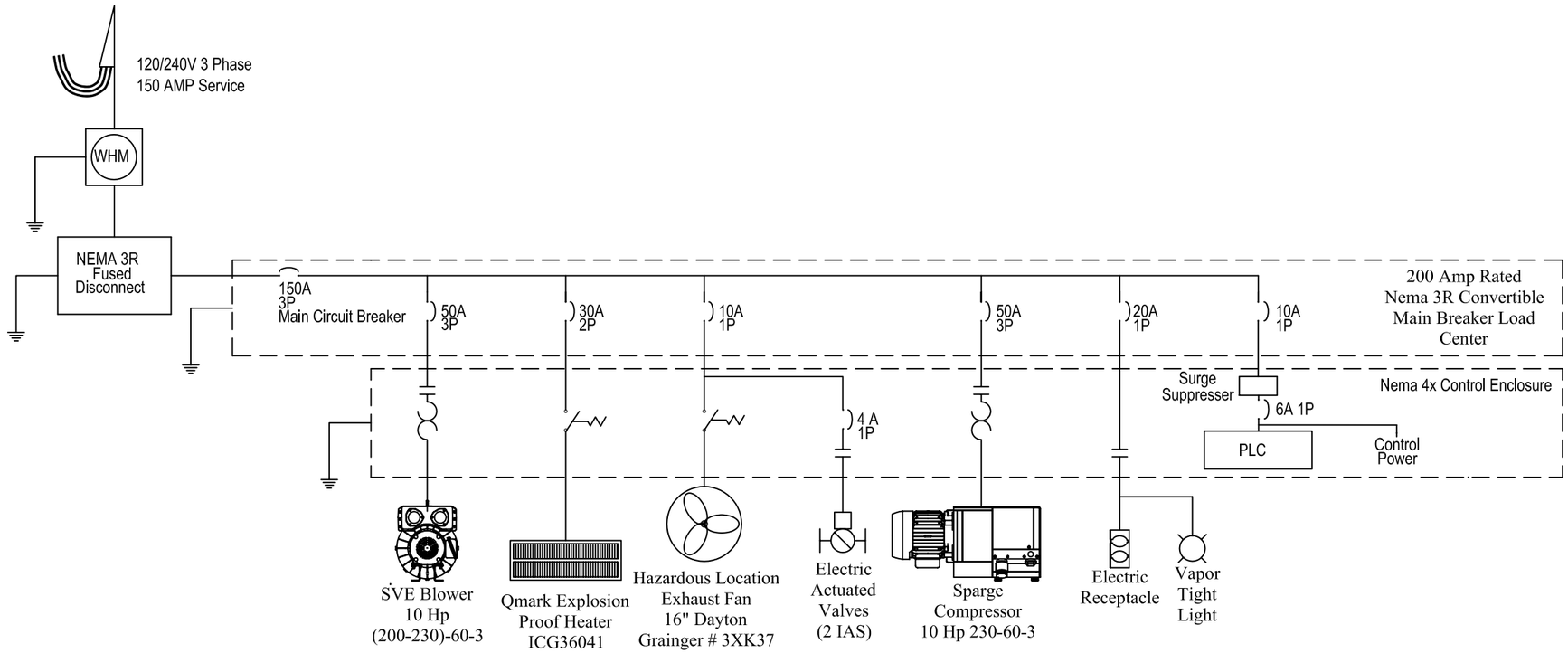

Control Panel, 120/240 Volt, 3 Phase, 150 Amp

Pole No.	Breaker Trip	Wire Size	Control Amps L1	Control Amps L2	Control Amps L3	Service	Pole No.	Breaker Trip	Wire Size	Control Amps L1	Control Amps L2	Control Amps L3	Service
1	50A	8	24			SVE Blower	2	10A	16	5			Control Power
3	50A	8		24		SVE Blower	4	30A	10		15		Heater
5	50A	8			24	SVE Blower	6	30A	10			15	Heater
7	50A	8	24			IAS Blower	8	10A	14	6			Fan / Ball Valves
9	50A	8		24		IAS Blower	10						
11	50A	8			24	IAS Blower	12						
13							14	20A	12	15			Receptacle / Light
15							16						
17							18						
			48	48	48	Sub Total				26	15	15	
						Total Connected Amps				74	63	63	

Bluestem Environmental Engineering

Drawing 3
Electrical Line Diagram
RDIP Remedial Trailer Design Package

Drawn By: SGE II	Date: 04/21/06	Rev: 0	Rev. Date: NA
Reviewed By: Sidney Edelbrock II, P.E.	KDHE Code:		
Scale: Not To Scale	File: RDIP Drawings.dwg		

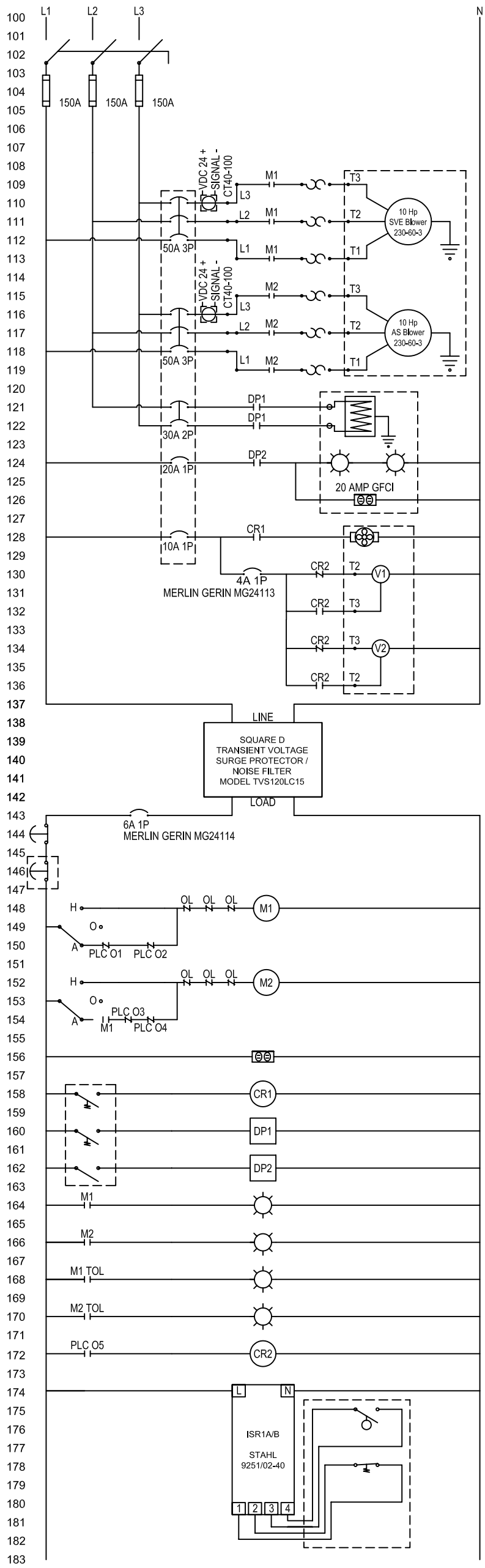

SVE MOTOR STARTER

IAS MOTOR STARTER

TRAILER HAZARDOUS LOCATION HEATER

INTERIOR HPS HAZARDOUS LOCATION TRAILER LIGHTS
APPELTON MW7075-120

EXTERIOR ELECTRIC RECEPTACLE

TRAILER VENT FAN

IAS ZONE 1 ELECTRICALLY ACTUATED CONTROL VALVES

IAS ZONE 2 ELECTRICALLY ACTUATED CONTROL VALVES

CONTROL PANEL EMERGENCY STOP

TRAILER INTERIOR EMERGENCY STOP

SOIL VENT

INSITU AIR SPARGE

15 AMP RECEPTACLE

TRAILER FAN THERMOSTAT AND POWER CONTROL RELAY OMRON MODEL G4B112T1FDUSRP120

TRAILER HEATER THERMOSTAT AND DEFINITE PURPOSE CONTACTOR 30AMP DOUBLE POLE SQUARE D MODEL 8910DPA32V02

TRAILER LIGHT SWITCH AND DEFINITE PURPOSE CONTACTOR 30AMP DOUBLE POLE SQUARE D MODEL 8910DPA32V02

SVE MOTOR OPERATING PILOT LIGHT

IAS MOTOR OPERATING PILOT LIGHT

SVE THERMAL OVERLOAD TRIP INDICATING PILOT LIGHT

IAS THERMAL OVERLOAD TRIP INDICATING PILOT LIGHT

IAS THERMAL OVERLOAD TRIP INDICATING PILOT LIGHT

STAHL INTRINSIC SAFETY ISOLATOR
CONNECTED TO THE CONDENSATE TRAPS FLOTECT L6EPB-B-S-3-0 FLOAT SWITCH AND SVE MOTOR J THERMOSTAT

Drawing 4A
Electrical Logic and Telemetry Diagrams
RDIP Remedial Trailer Design Package

Drawn By: SGE II	Date: 11/28/06	Rev: 0	Rev. Date: NA
Reviewed By: Sidney Edelbrock II, P.E.	KDHE Code:		
Scale: Not To Scale	File: RDIP Drawings.dwg		

Bluestem Environmental Engineering

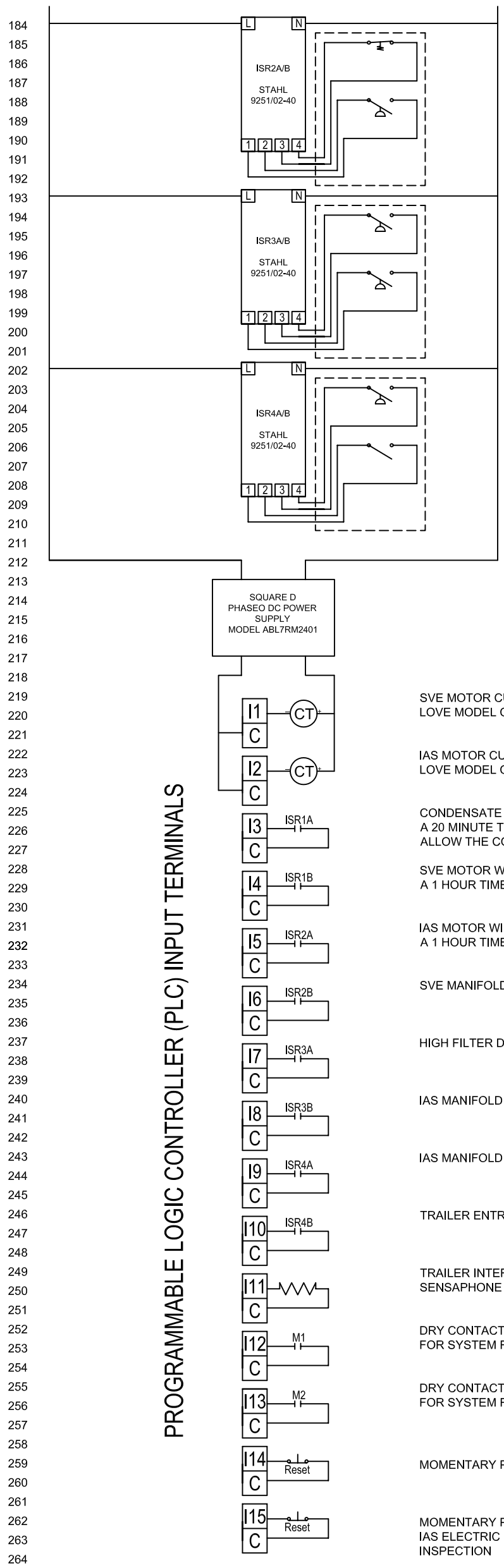

PROGRAMMABLE LOGIC CONTROLLER (PLC) INPUT TERMINALS

STAHL INTRINSIC SAFETY ISOLATOR
CONNECTED TO IAS MOTOR J THERMOSTAT (IF INCLUDED) AND DWYER MODEL 1950G-20-B-24 (4-20 "W.C.) DIFFERENTIAL PRESSURE SWITCH

STAHL INTRINSIC SAFETY ISOLATOR
WITH DWYER MODEL 1950G-20-B-24 (4-20 "W.C.) DIFFERENTIAL PRESSURE SWITCH AND MODEL 1950P-25 (4-25 PSIG) DIFFERENTIAL PRESSURE SWITCH ATTACHED

STAHL INTRINSIC SAFETY ISOLATOR
WITH DWYER MODEL 1950P-25 (4-25 PSIG) DIFFERENTIAL PRESSURE SWITCH AND MAGNETIC REED ENTRY SWITCH ATTACHED

SVE MOTOR CURRENT TRANSDUCER
LOVE MODEL CT40-100

IAS MOTOR CURRENT TRANSDUCER
LOVE MODEL CT40-100

CONDENSATE TRAP HIGH LEVEL ALARM STARTS
A 20 MINUTE TIMED DELAY OF THE SVE MOTOR TO ALLOW THE CONDENSATE TANK TO GRAVITY DRAIN

SVE MOTOR WINDING TEMPERATURE ALARM STARTS
A 1 HOUR TIME DELAY TO ALLOW THE MOTOR TO COOL

IAS MOTOR WINDING TEMPERATURE ALARM STARTS
A 1 HOUR TIME DELAY TO ALLOW THE MOTOR TO COOL

SVE MANIFOLD LOW VACUUM ALARM

HIGH FILTER DIFFERENTIAL PRESSURE ALARM

IAS MANIFOLD ZONE 1 PRESSURE LOSS ALARM

IAS MANIFOLD ZONE 2 PRESSURE LOSS ALARM

TRAILER ENTRY ALARM

TRAILER INTERNAL TEMPERATURE SENSOR
SENSAPHONE MODEL FGD-0102

DRY CONTACT TO SVE MOTOR CONTACTOR AUXILIARY FOR SYSTEM RUN TIME ACCUMULATION

DRY CONTACT TO IAS MOTOR CONTACTOR AUXILIARY FOR SYSTEM RUN TIME ACCUMULATION

MOMENTARY PUSH BUTTON MANUAL ALARM RESET

MOMENTARY PUSH BUTTON TO MANUALLY CYCLE THE IAS ELECTRIC CONTROL VALVES FOR ONSITE INSPECTION

Drawing 4B
Electrical Logic and Telemetry Diagrams
RDIP Remedial Trailer Design Package

Drawn By: SGE II	Date: 11/28/06	Rev: 0	Rev. Date: NA
Reviewed By: Sidney Edelbrock II, P.E.	KDHE Code:		
Scale: Not To Scale	File: RDIP Drawings.dwg		

Bluestem Environmental Engineering

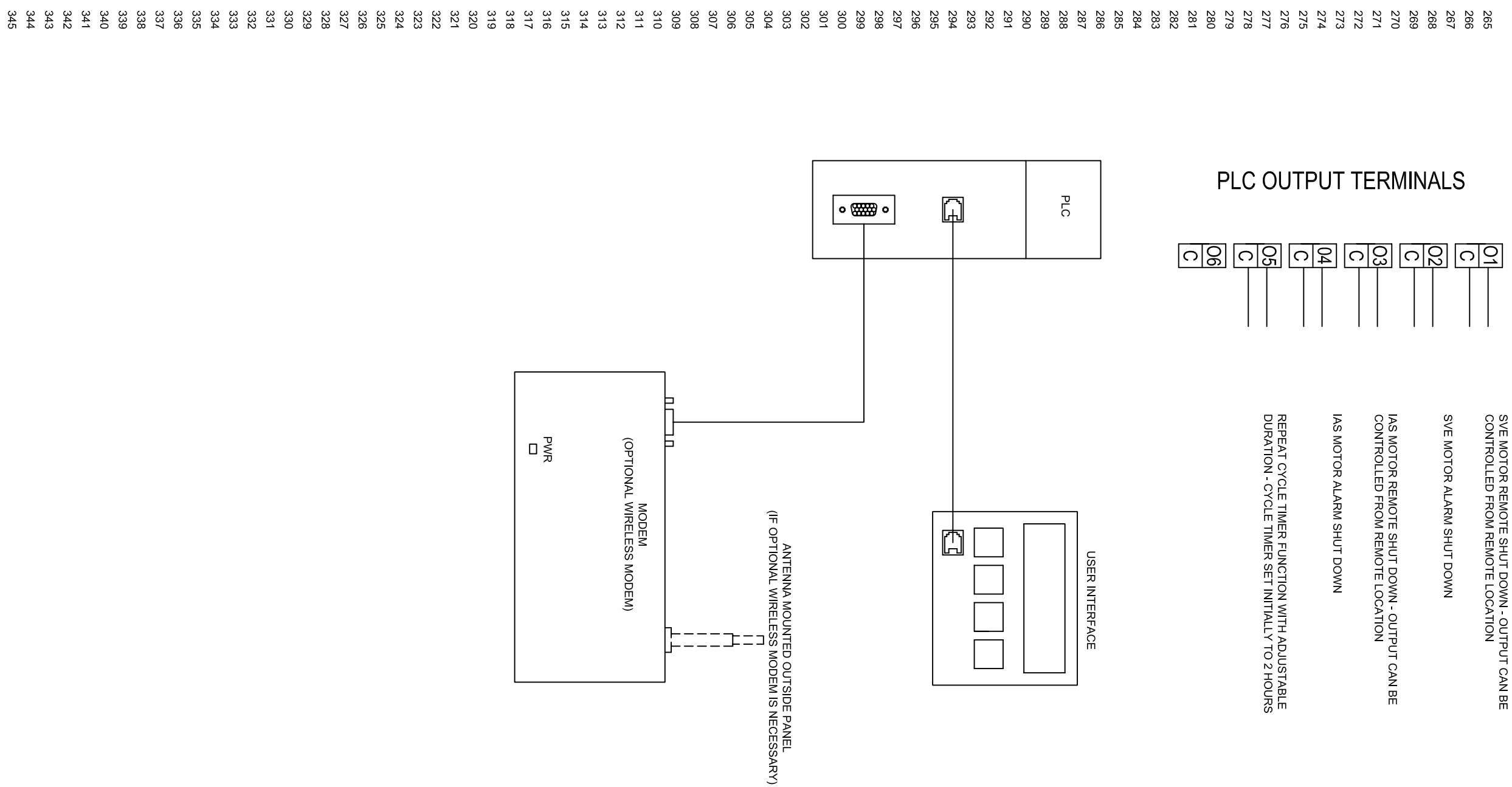

Bluestem Environmental Engineering

Drawing 4C Electrical Logic and Telemetry Diagrams RDIP Remedial Trailer Design Package			
Drawn By: SGE II	Date: 11/28/06	Rev: 0	Rev. Date: NA
Reviewed By: Sidney Edelbrock II, P.E.	KDHE Code:		
Scale: Not To Scale	File: RDIP Drawings.dwg		

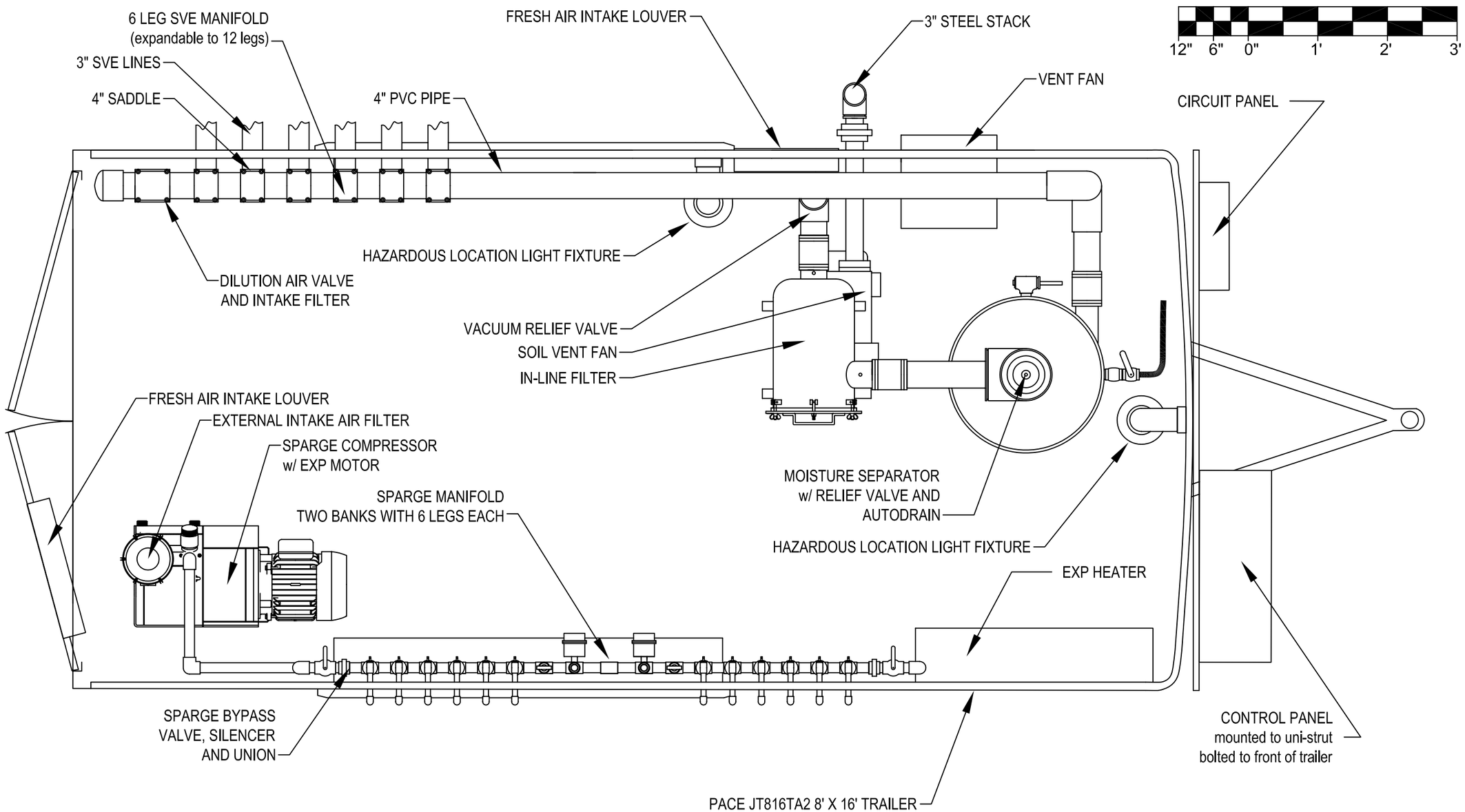

Bluestem Environmental Engineering

Drawing 5
Remediation Trailer Plan View
RDIP Remedial Trailer Design Package

Drawn By: SGEII	Date: 11/28/06	Rev: 0	Rev. Date: NA
Reviewed By: Sidney Edelbrock II, P.E.	KDHE Code:		
Scale: 1 inch = 1.5 feet	File: RDIP Drawings.dwg		

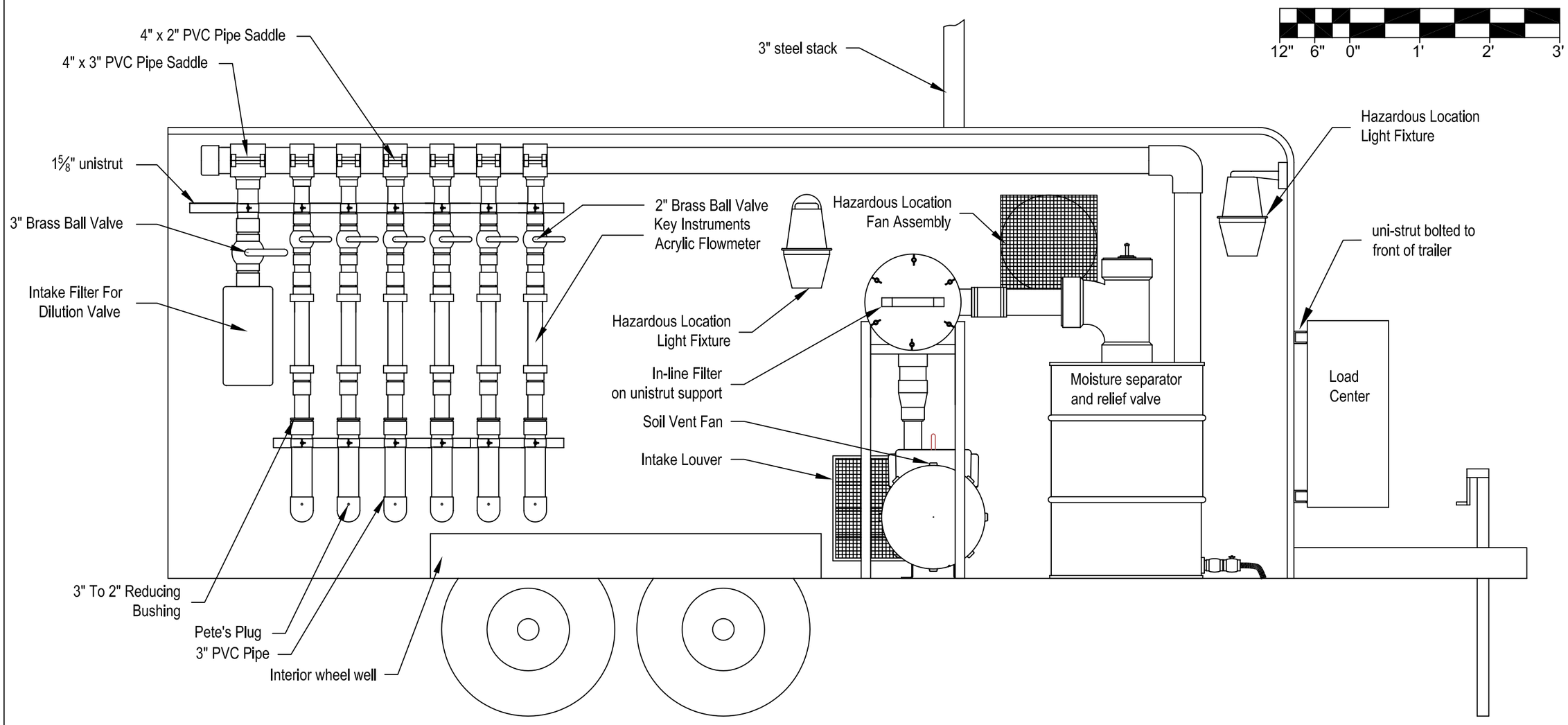

Bluestem Environmental Engineering

Drawing 6
SVE Elevation (Trailer Left Side)
RDIP Remedial Trailer Design Package

Drawn By: SGEII	Date: 11/28/06	Rev: 0	Rev. Date: NA
Reviewed By: Sidney Edelbrock II, P.E.	KDHE Code:		
Scale: 1 inch = 1.5 foot	File: RDIP Drawings.dwg		

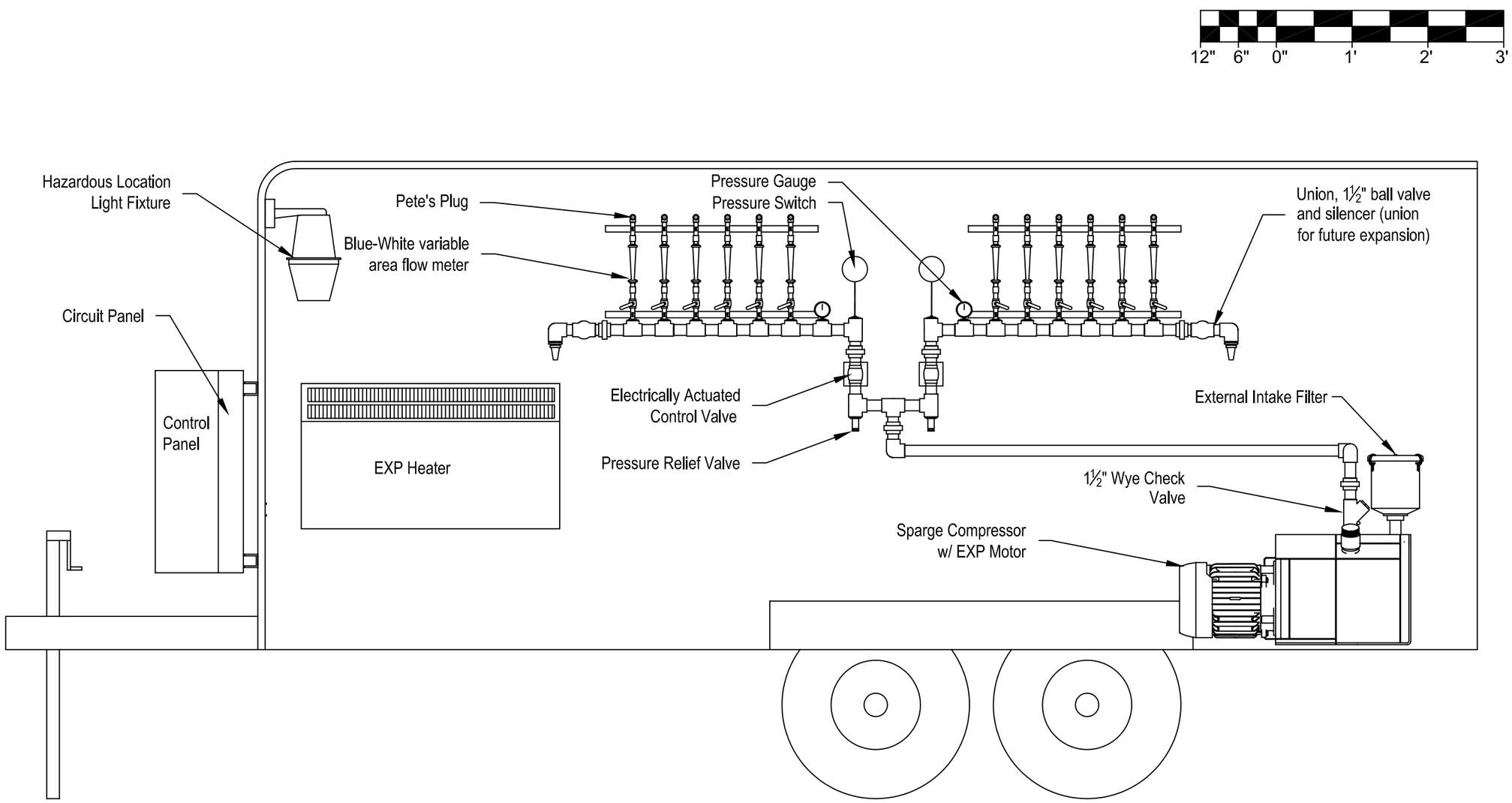

Bluestem Environmental Engineering

Drawing 7
IAS Elevation (Trailer Right Side)
RDIP Remedial Trailer Design Package

Drawn By: SGEII	Date: 04/21/06	Rev: 0	Rev. Date: NA
Reviewed By: Sidney Edelbrock II, P.E.	KDHE Code:		
Scale: 1 inch = 1.5 feet	File: RDIP Drawings.dwg		

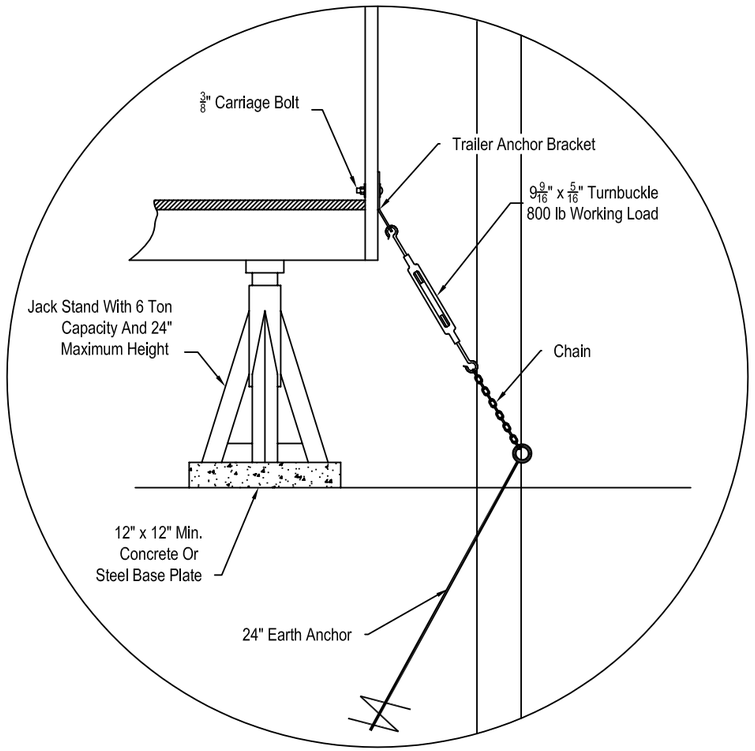

View Of Trailer Anchor At A Scale Of 1" = 1'

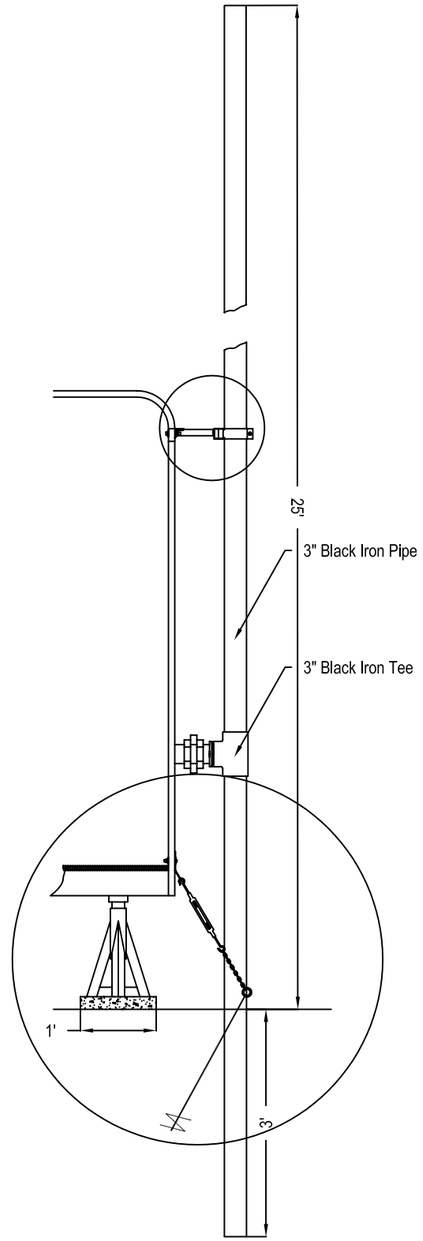

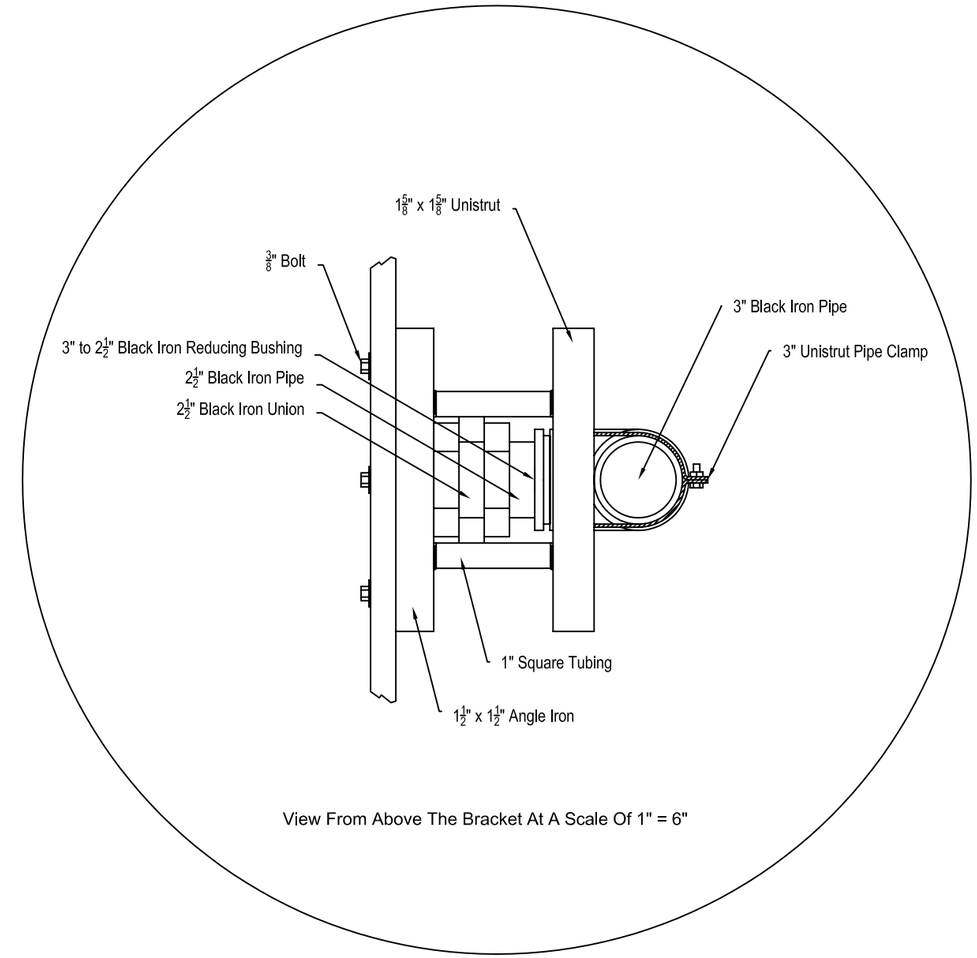

View From Above The Bracket At A Scale Of 1" = 6"

Bluestem Environmental Engineering

Drawing 8 Stack Construction Detail RDIP Remedial Trailer Design Package			
Drawn By: SGEII	Date: 10/27/06	Rev: 0	Rev. Date: NA
Reviewed By: Sidney G. Edelbrock II, P.E.	KDHE Code:		
Scale: 1 inch = 2 foot	File: RDIP Drawings.dwg		

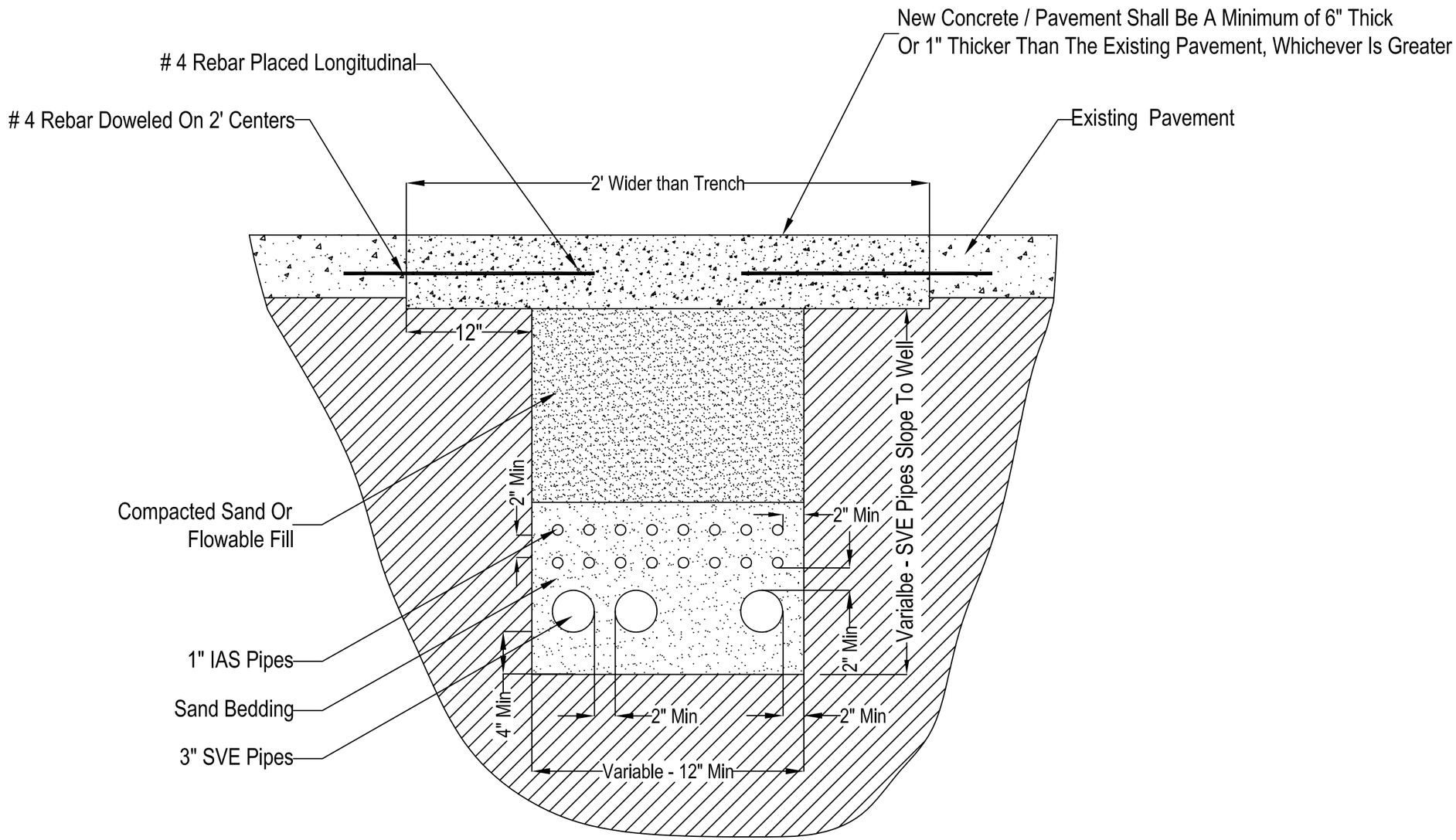

Bluestem Environmental Engineering

Drawing 9 Pipe And Trench Detail RDIP Remedial Trailer Design Package				
Drawn By: SGE II	Date: 10/27/06	Rev: 0	Date: 9/6/01	
Reviewed By: Sidney G Edelbrock II, P.E.	KDHE Code:			
Scale: Not To Scale	File: Prel RDIP Drawings.dwg			

EN 858 & CP 858
Sealed Regenerative Blower w/Explosion-Proof Motor

FEATURES
- Manufactured in the USA – ISO 9001 compliant
- Maximum flow: 400 SCFM
- Maximum pressure: 120 IWG
- Maximum vacuum: 98 IWG
- Standard motor: 10 HP, explosion-proof
- Cast aluminum blower housing, cover, impeller & manifold; cast iron flanges (threaded); teflon lip seal
- UL & CSA approved motor with permanently sealed ball bearings for explosive gas atmospheres Class I Group D minimum
- Sealed blower assembly
- Quiet operation within OSHA standards

MOTOR OPTIONS
- International voltage & frequency (Hz)
- Chemical duty, high efficiency, inverter duty or industry-specific designs
- Various horsepowers for application-specific needs

BLOWER OPTIONS
- Corrosion resistant surface treatments & sealing options
- Remote drive (motorless) models
- Slip-on or face flanges for application-specific needs

ACCESSORIES (See Catalog Accessory Section)
- Flowmeters reading in SCFM
- Filters & moisture separators
- Pressure gauges, vacuum gauges & relief valves
- Switches – air flow, pressure, vacuum or temperature
- External mufflers for additional silencing
- Air knives (used on blow-off applications)
- Variable frequency drive package

BLOWER PERFORMANCE AT STANDARD CONDITIONS

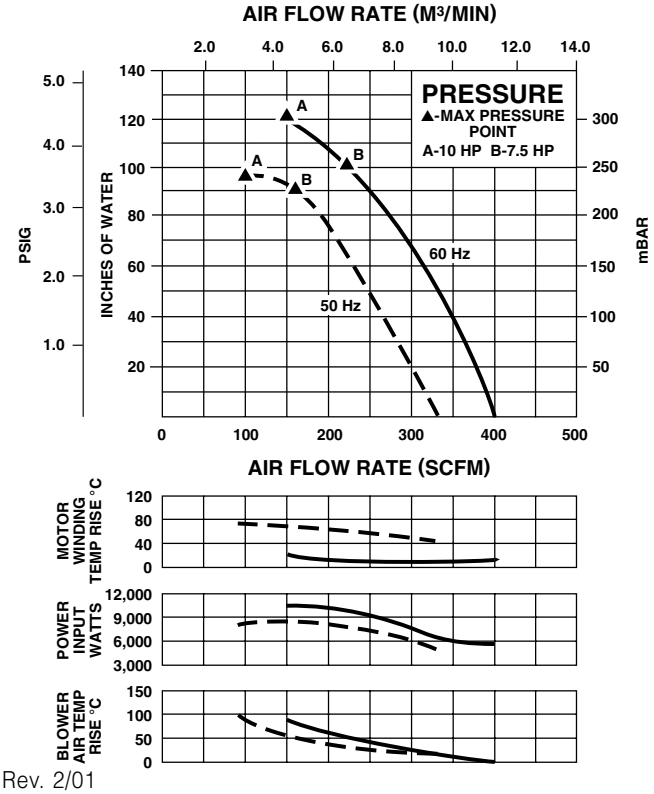

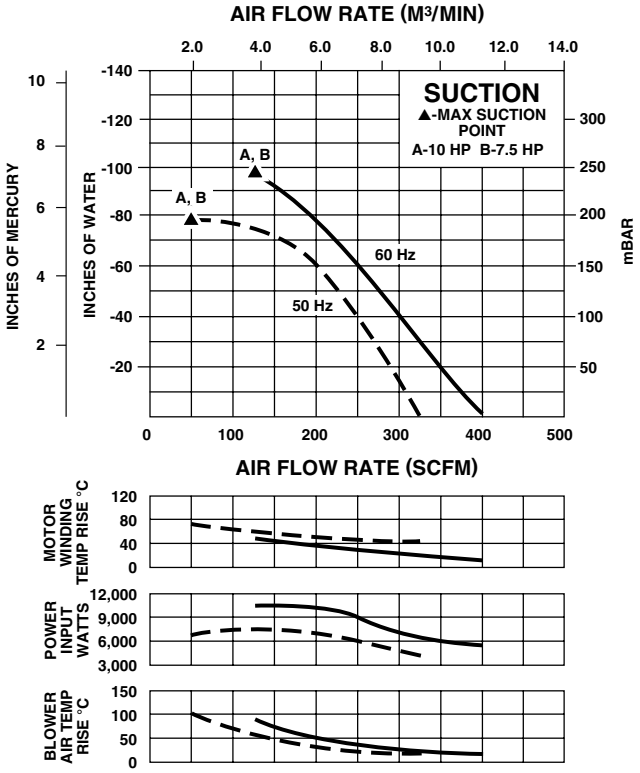

Rev. 2/01

EN 858 & CP 858
Sealed Regenerative Blower w/Explosion-Proof Motor

Scale CAD drawing available upon request.

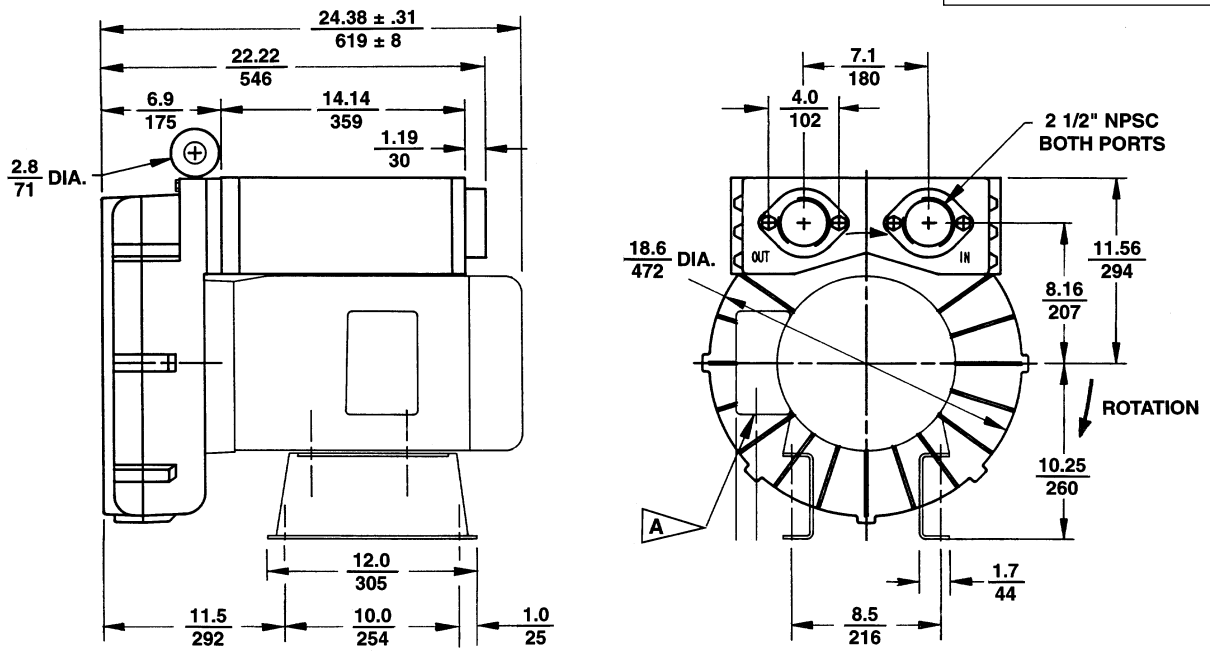

DIMENSIONS: IN / MM
TOLERANCES: .XX ± .1 / 2.5
(UNLESS OTHERWISE NOTED)

A 0.75" NPT CONDUIT CONNECTION AT 12 O'CLOCK POSITION

SPECIFICATIONS

MODEL	EN858BD72WL		EN858BD86WL	EN858BA72WL		CP858FZ72WLR
Part No.	038744		038745	080070		038980
Motor Enclosure – Shaft Material	Explosion-proof – **CS**		Explosion-proof – **CS**	Explosion-proof – **CS**		Chem XP – **SS**
Horsepower	10.0		10.0	7.5		Same as EN858BD72WL – 038744 except add Chemical Processing (CP) features from catalog inside front cover
Phase – Frequency [1]	Three - 60 Hz		Three - 60 Hz	Three - 60 Hz		
Voltage [1]	230	460	575	230	460	
Motor Nameplate Amps	24	12	9.6	17	8.5	
Max. Blower Amps [3]	29	14.5	11.6	26	13	
Inrush Amps	162	81	93	126	63	
Starter Size	2	1	1	1	1	
Service Factor	1.0		1.0	1.0		
Thermal Protection [2]	Class B - Pilot Duty		Class B - Pilot Duty	Class B - Pilot Duty		
XP Motor Class – Group	I-D, II-F&G		I-D, II-F&G	I-D, II-F&G		
Shipping Weight	332 lb (151 kg)		332 lb (151 kg)	320 lb (145 kg)		

[1] Rotron motors are designed to handle a broad range of world voltages and power supply variations. Our dual voltage 3 phase motors are factory tested and certified to operate on both: **208-230/415-460 VAC-3 ph-60 Hz** and **190-208/380-415 VAC-3 ph-50 Hz**. Our dual voltage 1 phase motors are factory tested and certified to operate on both: **104-115/208-230 VAC-1 ph-60 Hz** and **100-110/200-220 VAC-1 ph-50 Hz**. All voltages above can handle a ±10% voltage fluctuation. Special wound motors can be ordered for voltages outside our certified range.

[2] Maximum operating temperature: Motor winding temperature (winding rise plus ambient) should not exceed 140°C for Class F rated motors or 120°C for Class B rated motors. Blower outlet air temperature should not exceed 140°C (air temperature rise plus inlet temperature). Performance curve maximum pressure and suction points are based on a 40°C inlet and ambient temperature. Consult factory for inlet or ambient temperatures above 40°C.

[3] Maximum blower amps corresponds to the performance point at which the motor or blower temperature rise with a 40°C inlet and/or ambient temperature reaches the maximum operating temperature.

Specifications subject to change without notice. Please consult your Local Field Sales Engineer for specification updates.

Rev. 2/01

Protection Accessories

Blower Connection Key
NPT – American National Standard Taper Pipe Thread (Male)
NPSC – American National Standard Straight Pipe Thread for Coupling (Female)
SO – Slip On (Smooth – No Threads)

Relief Valves - Mechanical

These Relief Valves offer an alternative to our diaphragm regulated designs for applications where pressure/vacuum level control is less critical. Installed properly, they protect your system from excessive pressures/vacuums and keep your blower from overheating. The spring loaded designs are fully field adjustable.

Relief Valves - Mechanical

- Suitable for both pressure and vacuum systems
- Inlet screen can be installed on either end as required

NOTE: Relief valves are not factory preset.

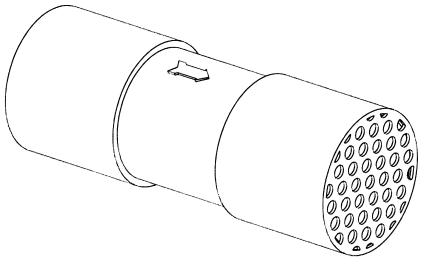

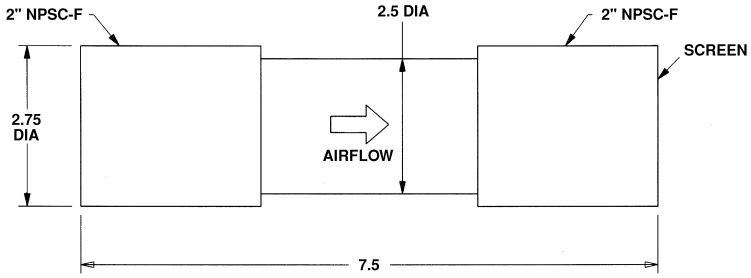

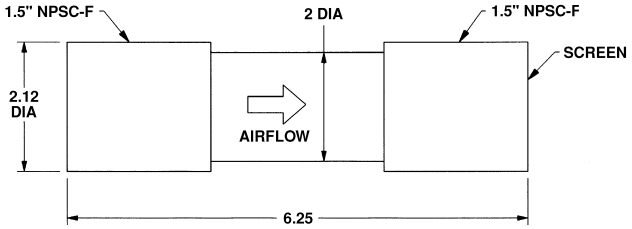

Accessory	Part Number	Reference Blower Model	Range	Connection
1 1/2" Mechanical Relief Valve	551026	B, C, D	.25-6.5 PSIG (20-180 IWG)	1 1/2" NPT-F
2" Mechanical Relief Valve	551027	D, E, F	1.5-9.5 PSIG (41.5-263 IWG)	2" NPT-F

Note: Blower models DR858 and P9 require two 551027 relief valves.

Relief Valves - Mechanical Vacuum Only

- Suitable for vacuum relief only
- Specifically designed for protecting system piping and vessels from damage caused by excessive vacuums

NOTE: Relief valves are not factory preset.

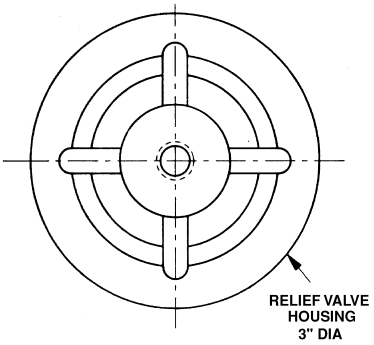

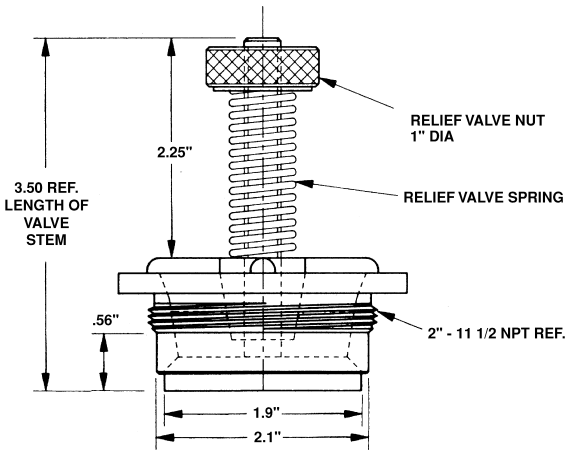

Accessory	Part Number	Range	Connection
2" Vacuum Relief Valve	523230	2.5 to 6.5 IHG (-35 to -90 IWG)	2" - 11 1/2 NPT-M

Rev. 2/01

Filtration Accessories

Blower Connection Key
NPT – American National Standard Taper Pipe Thread (Male)
NPSC – American National Standard Straight Pipe Thread for Coupling (Female)
SO – Slip On (Smooth – No Threads)

Moisture Separator™

By separating and containing entrained liquids, Rotron's moisture separator helps protect our regenerative blowers and the end treatment system from corrosion and mineralization damage. Recommended for all soil vacuum extraction applications.

SPECIFICATIONS:

SEPARATION METHOD – High Efficiency Cyclonic
RELIEF VALVE MATERIAL – Brass & Stainless Steel
FLOAT MATERIAL – Copper
FLOAT SWITCH – SPDT, Explosion-proof
NEMA 7&9, 5 Amp max.

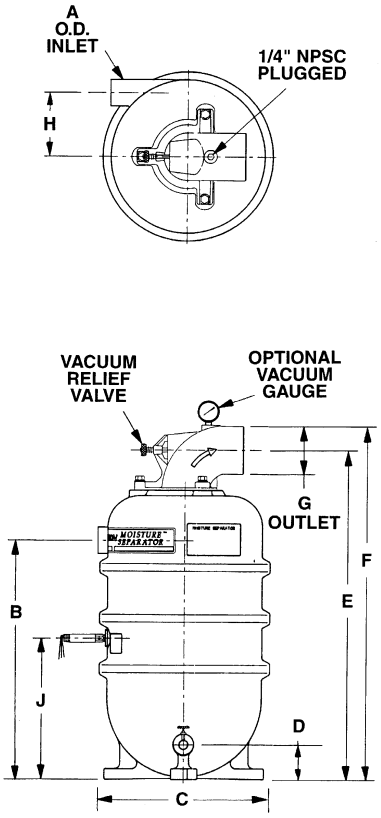

PLASTIC "P" DESIGN

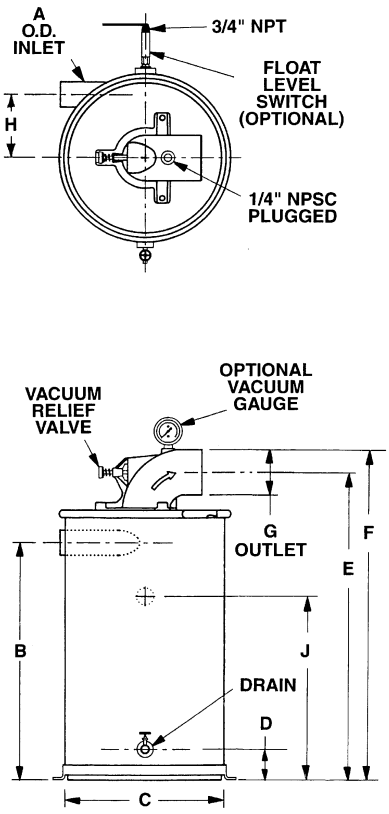

METAL "D" DESIGN

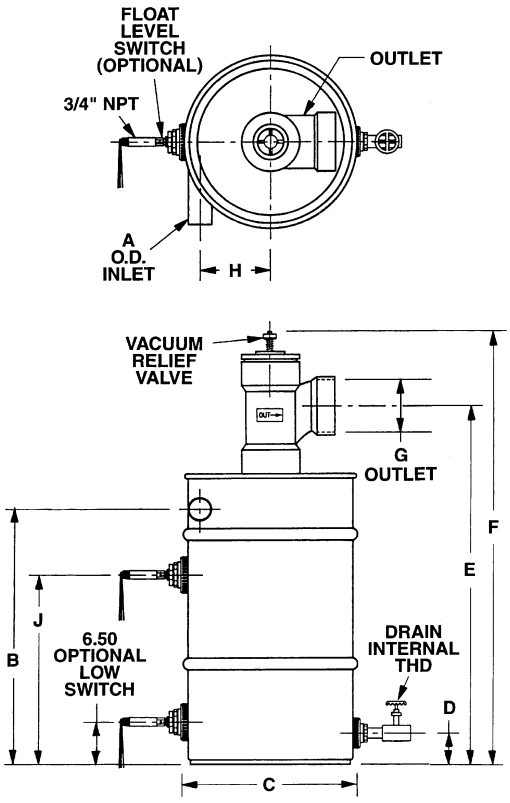

METAL "B" DESIGN

Model	Part No.	CFM Max.	A Dia.	B	C Dia.	D	E	F	G Dia.	H	J Switch	Drain Internal THD	Shipping Weight
MS200PS	038519	200	2.38	22.46	16.00	3.25	31.05	33.30	4.50 OD	6.00	13.25	3/4" NPT	42 lb.
MS300PS	038520	300	2.88										
MS200DS	080086	200	2.00	22.12	16.75	2.75	27.92	30.17		6.56	12.62		
MS300DS	080087	300	2.50							6.81			
MS350BS	038357	350	3.25	28.00	23.00	4.00	37.25	39.50		9.75	17.50	1" NPT	82 lb.
MS500BS	080660	500					37.37	54.50	6.63 ID				95 lb.
MS600BS	080659	600	4.00	27.00						9.25			96 lb.
MS1000BS	038914	1000	6.00	31.00	27.00		47.32	51.70	8.62 OD	10.00	19.88		150 lb.

Models without float switch available. Metal MS200/300DS models are not the standard stocked, but are available.

Rev. 2/01

Blower Model Reference Key	
A = SPIRAL	E = DR/EN/CP 656, 6, 623, S7
B = DR/EN/CP 068, 083, 101, 202	F = DR/EN/CP 707, 808, 858, S9, P9 (Inlet Only)
C = DR/EN/CP 303, 312, 313, 353	G = DR/EN/CP 823, S13, P13 (Inlet Only)
D = DR/EN/CP 404, 454, 513, 505, 555, 523	H = DR/EN/CP 909, 979, 1223, 14, S15, P15 (Inlet Only)

2.0 Moisture Separator™ Specifications

2.1 DUTY

The moisture separator shall be designed for use in a soil vapor extraction system capable of continuous operation with a pressure drop of less than six inches of water at the rated flow of _____ SCFM. The separator shall be capable of operation under various inlet conditions ranging from a fine mist to slugs of water with high efficiency.

2.2 PRINCIPLE OF OPERATION

The moisture separator shall incorporate cyclonic separation to remove entrained water. The separator must protect against an overflow by fail safe mechanical means. An electrical switch or contact(s) alone is not an acceptable means of protection against overflow, but is a good backup.

2.3 CONSTRUCTION

The body of the moisture separator shall be constructed of heavy wall plastic or heavy gauge cold rolled steel. The steel interior and exterior shall be epoxy (powder) coated to resist abrasion, corrosion, and chipping that might expose the surface. The inlet shall be tangentially located and welded to the body. The outlet port shall be constructed of PVC or cast aluminum alloy, flanged and sealed to the center of the top of the separator. The separator shall incorporate a non-sparking copper float ball and an adjustable relief valve to protect against overflow and overheating the blower.

2.4 CAPACITY AND DIMENSIONS

The moisture separator must have a liquid capacity of _____ gallons. The inlet shall be _____ inch OD slip-on type. The outlet shall be _____ inch OD slip-on type.

For DR/EN/CP Blower Model	Selector Moisture Separator Model	Liquid-holding Capacity (gallons)	Inlet (OD)	Outlet	Max Vacuum Allowed (IHg)
404 454 505 513 523 555 623 823	MS200PS	7	2.38	4.5" OD	12
	MS200DS	10	2.0		22
656 6 707	MS300PS	7	2.88		12
	MS300DS	10	2.5		22
808	MS350BS	40	3.25		
858 1223	MS500BS			6.63" ID	
909	MS600BS		4.0"		
979 14	MS1000BS		6.0"	8.62" OD	

2.5 PRESSURE DROP

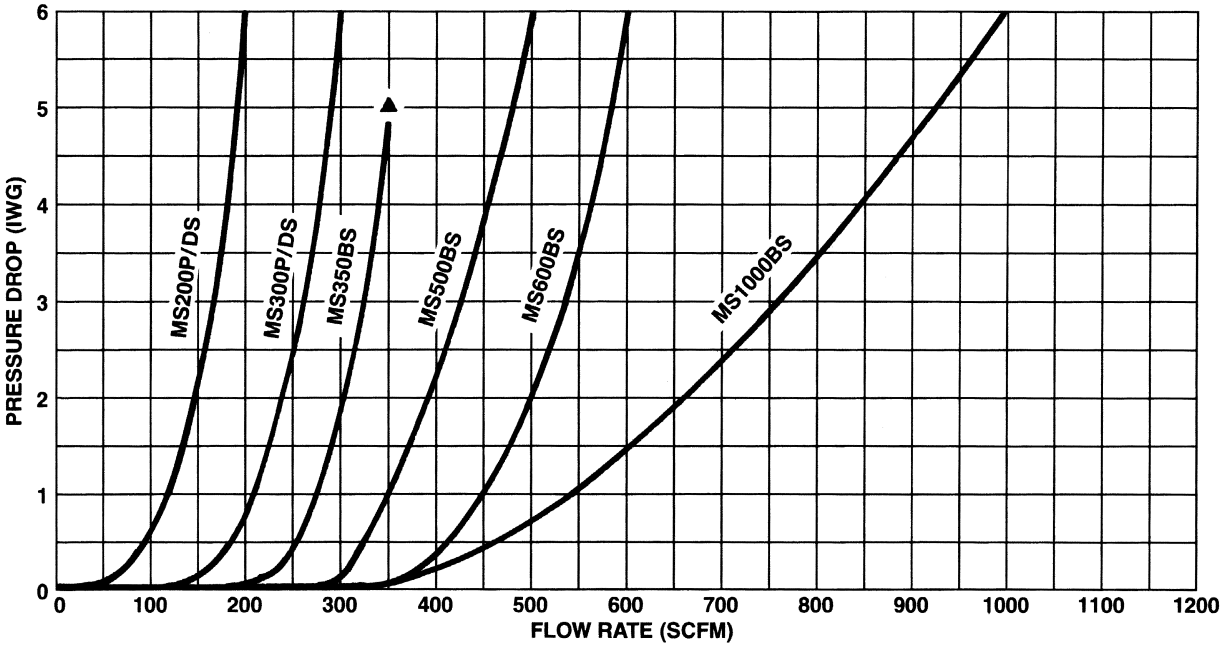

FLOTECT™ MODEL L-6 FLOAT SWITCH

Installation and Operating Instructions

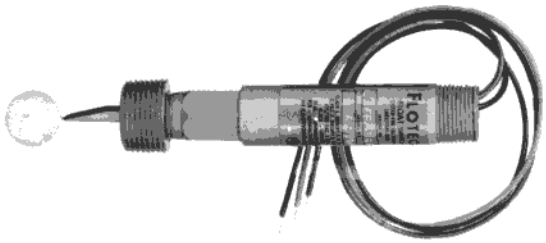

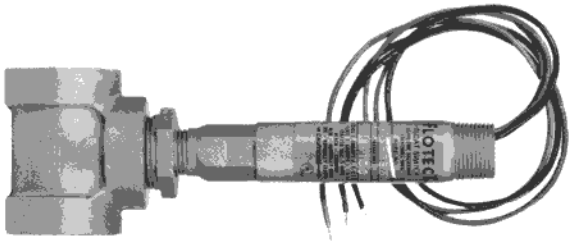

Explosion-Proof; U.L. and C.S.A. Listed -
Class I, Groups *A, B, C & D
Class II, Groups E, F & G
CENELEC: EExd IIC T6 (T amb=75°C)
*(Group A, stainless steel body only)

PHYSICAL DATA

Temperature Limit: 220°F (105°C) maximum
Maximum Pressure: See chart below
Switches: One or two SPDT snap switches
Electrical Rating: U.L.: 5A @ 125/250 VAC.
C.S.A. and CENELEC: 5A @ 125/250 VAC, 5A resistive, 3A inductive @ 30 VDC.
Optional ratings: MV option—Gold contacts for dry circuits. Rated 0.1A @ 125 VAC MT option: 400°F (205°C) 5A @ 125/250 VAC (not listed).
Wiring Connections: 3-18" (460mm) wire leads, 18 ga.
CENELEC models only: push-in type terminal blocks
Black = common, blue = N.O., red = N.C.
Minimum Specific Gravity:
Polypropylene float - 0.9
Round SS float - 0.7
Cylindrical SS float - 0.5
Switch Body: Brass 3/4" NPT conduit connection.
For SS switch body, change model no. to L6EPS.
Piping/Mounting Connection: 1" NPT
Installation: Horizontal, index arrow pointing down.
Weight: 1 lb. (.5 KG); w/external chamber 1-3/4 lb. (.8 KG)

WETTED MATERIALS CHART

Model	Brass	Bronze	Ceramic	Polypropylene	301SS	303SS	304SS
B-S-3-A	X		X		X		X
B-S-3-B	X	X	X	X	X		
B-S-3-C	X		X		X		X
B-S-3-H	X	X	X		X		X
B-S-3-O	X		X	X	X		
S-S-3-A			X	X	X		X
S-S-3-C			X		X	X	X
S-S-3-L			X		X	X	X
S-S-3-O			X	X	X	X	
S-S-3-S			X	X	X	X	

MAXIMUM PRESSURE CHART

Model Number	Float	Pressure Rating PSIG (KG/CM²)
L6EPB-B-S-3-A	Cylindrical SS	200 (14)
L6EPB-B-S-3-B	Polypropylene	250 (18)
L6EPB-B-S-3-C	Round SS	350 (25)
L6EPB-B-S-3-H	Round SS	250 (18)
L6EPB-B-S-3-O	Polypropylene	1000 (70)
L6EPB-S-S-3-A	Cylindrical SS	200 (14)
L6EPB-S-S-3-C	Round SS	350 (25)
L6EPB-S-S-3-L	Round SS	350 (25)
L6EPB-S-S-3-O	Polypropylene	2000 (140)
L6EPB-S-S-3-S	Polypropylene	2000 (140)

INSTALLATION:

Unpack switch and remove any packing material found inside lower housing or float chamber.

Switch must be installed with body in a horizontal plane and arrow on side pointing down.

If switch has an external float chamber (tee), connect it to vertical sections of 1" NPT pipe installed outside vessel walls at appropriate levels. If unit has no external float chamber, it must be mounted in a 1" NPT half coupling welded to the vessel wall. The coupling must extend through the wall.

Inspect and clean wetted parts at regular intervals.

ELECTRICAL CONNECTIONS:

Connect wire leads in accordance with local electrical codes and switch action required. N.O. contacts will close and N.C. contacts will open when liquid level causes float to rise. They will return to "normal" condition on decreasing liquid level. Black = common, Blue = N.O. and Red = N.C.

For units supplied with both internal and external grounds, the ground screw inside the housing must be used to ground the control. The external ground screw is for supplementary bonding when allowed or required by local code. Some CSA listed models are furnished with a separate green ground wire. Such units must be equipped with a junction box, not supplied but available on special order.

CENELEC certified models include a junction box. Cable should enter enclosure through an approved EX cable gland, not supplied. Push stripped and tinned leads into appropriate openings in terminal block(s). To connect fine stranded leads or to remove any wire, depress spring release with small screwdriver first.

All wiring, conduit and enclosures must meet applicable codes for hazardous areas. Conduits and enclosures must be properly sealed. For outdoor or other locations where temperatures vary widely, precautions should be taken to prevent condensation inside switch or enclosure. Electrical components must be kept dry at all times. **CAUTION:** To prevent ignition of hazardous atmospheres, disconnect the device from the supply circuit before opening. Keep assembly tightly closed when in use.

Dimensions on reverse

W.E. ANDERSON DIV., DWYER INSTRUMENTS, INC.
P. O. BOX 358 • MICHIGAN CITY, INDIANA 46360, U.S.A.
Telephone 219/879-8000
Fax 219/872-9057

FLOTECT™ MODEL L-6 FLOAT SWITCH — DIMENSION DRAWINGS

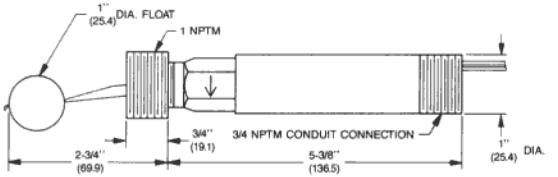

Polypropylene Float

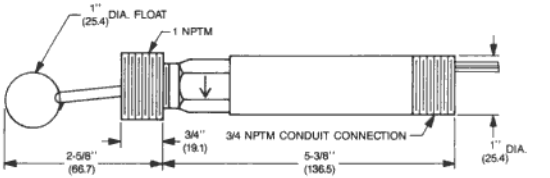

Round Stainless Steel Float

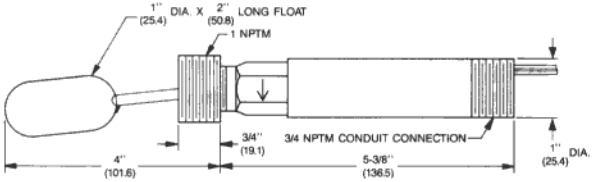

Cylindrical Stainless Steel Float

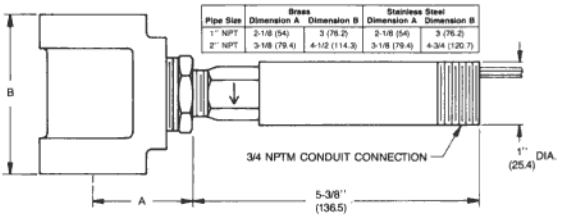

Pipe Size	Brass Dimension A	Brass Dimension B	Stainless Steel Dimension A	Stainless Steel Dimension B
1" NPT	2-1/8 (54)	3 (76.2)	2-1/8 (54)	3 (76.2)
2" NPT	3-1/8 (79.4)	4-1/2 (114.3)	3-1/8 (79.4)	4-3/4 (120.7)

With External Float Chamber (Tee)

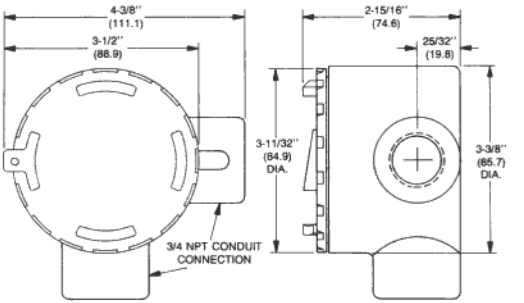

CSA, CENELEC Conduit Enclosure

Limited Warranty: The Seller warrants all Dwyer instruments and equipment to be free from defects in workmanship or material under normal use and service for a period of one year from date of shipment. Liability under this warranty is limited to repair or replacement F.O.B. factory of any parts which prove to be defective within that time or repayment of the purchase price at the Seller's opinion provided the instruments have been returned, transportation prepaid, within one year from the date of purchase. All technical advice, recommendations and services are based on technical data and information which the Seller believes to be reliable and are intended for use by persons having skill and knowledge of the business, at their own discretion. In no case is Seller liable beyond replacement of equipment F.O.B. factory or the full purchase price. This warranty does not apply if the maximum ratings label is removed or if the instrument or equipment is abused, altered, used at ratings above the maximum specified, or otherwise misused in any way.

THIS EXPRESS LIMITED WARRANTY IS IN LIEU OF AND EXCLUDES ALL OTHER REPRESENTATIONS MADE BY ADVERTISEMENTS OR BY AGENTS AND ALL OTHER WARRANTIES, BOTH EXPRESS AND IMPLIED. THERE ARE NO IMPLIED WARRANTIES OF MERCHANTABILITY OR OF FITNESS FOR A PARTICULAR PURPOSE FOR GOODS COVERED HEREUNDER.

Buyers Remedies: THE BUYER'S EXCLUSIVE AND SOLE REMEDY ON ACCOUNT OF OR IN RESPECT TO THE FURNISHING OF NONCONFORMING OR DEFECTIVE MATERIAL SHALL BE TO SECURE REPLACEMENT THEREOF AS AFORESAID. THE SELLER SHALL NOT IN ANY EVENT BE LIABLE FOR THE COST OF ANY LABOR EXPENDED ON ANY SUCH MATERIAL OR FOR ANY SPECIAL, DIRECT, INDIRECT OR CONSEQUENTIAL DAMAGES TO ANYONE BY REASON OF THE FACT THAT IT SHALL HAVE BEEN NON-CONFORMING OR DEFECTIVE.

W.E. ANDERSON DIV., DWYER INSTRUMENTS, INC.
P.O. Box 358
Michigan City, IN 46360
Phone: 219/879-8000
Fax: 219/872-9057

©Copyright 1993 Dwyer Instruments, Inc.
FR 82-440726-00
Printed in U.S.A. 10/93

"L" STYLE INLET VACUUM AIR FILTERS
"CSL" Series 3" - 6" MPT

APPLICATIONS

- Ash Handling
- Bag House Systems
- Blowers Fan
- Blowers-PD Type
- Cement
- Chemical Processing
- Envelope Manufacturing
- Factory Automation
- Food Processing-Vacuum
- Glass, Ceramic-Vacuum
- Intake Suction-Vacuum Pump
- Medical
- Pneumatic Conveying Systems
- Remote Installations for Piston and Screw Compressors
- Vacuum Furnaces
- Vacuum Packaging
- Vacuum Pump-Rotary Vane
- Vacuum Pumps & Systems
- Vacuum Pump-Screw Technology
- Vacuum Pump-Side Channel
- Vacuum Systems-Central
- Waste Water Aeration
- Woodworking

FEATURES & SPECIFICATIONS

- 99 removal efficiency std: Paper 2 micron, Polyester 5 micron
- Filter change out differential: 10"-15" in. H_2O above initial Delta P
- Heavy duty T bolts for easy maintenance
- Hydrostically tested 0.5 bar pressure for vacuum tightness
- Inlet air enters canister above element
- Inlet/Outlet 1/4" Gauge Taps standard
- Large dirt holding capacity and easy field cleaning
- Low pressure drop
- Positive sealing O-ring seal system
- Powder coat paint finish
- Rugged all steel construction with baked enamel finish
- Temp (continuous): min -15 F (-26 C) max 220 F (104 C)
- Vacuum level: Typically $1x10^{-3}$ mmHg ($1.3x10^{-3}$ mbar)

OPTIONS

- Activated carbon prefilter to reduce odor
- Available in *Stainless Steel*
- Epoxy coated housings
- Larger sizes available
- Special connections, BSPT/Metric
- Support brackets
- Various elements available

Line Drawing

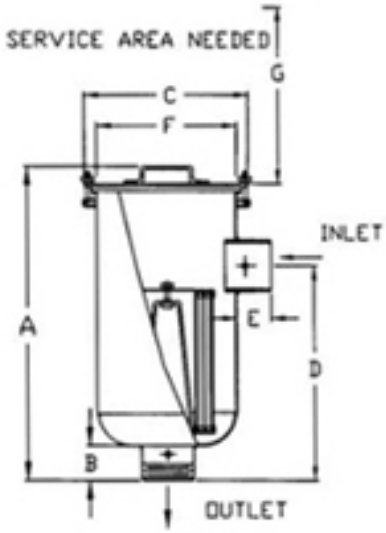

***All measurements are shown in standards.**

Typical Lead Times:
- 1 - 2 weeks
- 3 - 4 weeks
- Normally in stock
- 5 - 7 weeks
- 8 + weeks

Add To Order	Model Number	Element Type	Inlet in. NPT or FLG	Outlet in. NPT or FLG	Connection Style	Dim A in.	Dim B in.	Dim C in.	Dim D in.	Dim E in.	Dim F in.	Dim G in.	Parent Flow SCFM	Element Parent Flow SCFM	Approx. Weight lbs.	CAD
	CSL-235P-300	Polyester	3	3	Call	27.12	3	14	18.5	3	12	10	300	570	47	CAD
	CSL-335P-300	Polyester	3	3	Call	27.12	3	14	18.5	3	12	15	300	800	50	CAD
	CSL-235P-400	Polyester	4	4	Call	27.12	3	14	18.5	3	12	10	520	570	52	CAD
	CSL-335P-400	Polyester	4	4	Call	27.12	3	14	18.5	3	12	15	520	800	55	CAD
	CSL-245P-500	Polyester	5	5	Call	28.12	3	18.5	19.5	3	16	10	800	880	82	CAD
	CSL-345P-500	Polyester	5	5	Call	28.12	3	18.5	19.5	3	16	15	800	1100	88	CAD
	CSL-275P-600	Polyester	6	6	Call	29.12	4	18.5	20.5	4	16	10	1100	1100	95	CAD
	CSL-375P-600	Polyester	6	6	Call	29.12	4	18.5	20.5	4	16	15	1100	1500	97	CAD
	CSL-234P-300	Paper	3	3	Call	27.12	3	14	18.5	3	12	10	300	570	47	CAD
	CSL-334P-300	Paper	3	3	Call	27.12	3	14	18.5	3	12	15	300	800	50	CAD
	CSL-234P-400	Paper	4	4	Call	27.12	3	14	18.5	3	12	10	520	570	52	CAD
	CSL-334P-400	Paper	4	4	Call	27.12	3	14	18.5	3	12	15	520	800	55	CAD
	CSL-244P-500	Paper	5	5	Call	28.12	3	18.5	19.5	3	16	10	800	880	82	CAD
	CSL-344P-500	Paper	5	5	Call	28.12	3	18.5	19.5	3	16	15	800	1100	88	CAD
	CSL-274P-600	Paper	6	6	Call	29.12	4	18.5	20.5	4	16	10	1100	1100	95	CAD
	CSL-374P-600	Paper	6	6	Call	29.12	4	18.5	20.5	4	16	15	1100	1500	97	CAD

Solberg Mfg.
1151 W. Ardmore Ave. Itasca, IL 60143 (630)773-1363 Fax: (630)773-0727

Filtration Accessories

Blower Connection Key
NPT – American National Standard Taper Pipe Thread (Male)
NPSC – American National Standard Straight Pipe Thread for Coupling (Female)
SO – Slip On (Smooth – No Threads)

Inlet Filter (Single Connection)

Inlet Filters protect the blower and the air distribution system from dust, and other airborne particles and contaminants. Normally used in pressure systems.

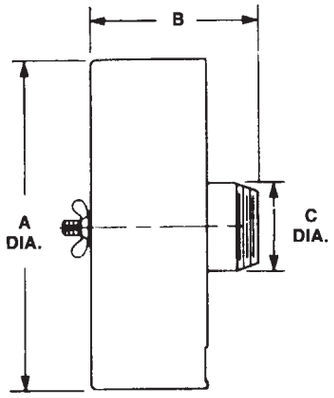

SPECIFICATIONS:

HOUSING – Steel
MEDIA – Polyester
EFFICIENCY – 97-98% (8 to 10 micron particle size)
FILTER ELEMENT – Replaceable (see filter elements)
NOTE: "Z" MEDIA (1 to 3 micron particle size) available

Standard Media Filter P/N	Filter Element	Reference Blower Model	Connection Inlet	Dimensions (Inches) A	B	C	Z Media Filter Part Number
477411	271078	A	2.00 SO	4.56	6.12	2.00	
516466	515132	B	1.00 NPT	6.00	6.50	1.00	517865
515122	515132	C,D	1.50 NPT	6.00	6.50	1.50	517866
515123	515133	E	2.00 NPT	7.75	7.25	2.00	517867
515124	515134	E	2.00 NPT	10.00	12.25	2.00	517868
515125	515134	F	2.50 NPT	10.00	12.50	2.50	517869
515145	515134	G	3.00 NPT	10.00	13.00	3.00	517870
515151	515135	H	4.00 NPT	10.00	14.00	4.00	517871
516511	516515	H	6.00 NPT	16.00	15.00	6.00	517872

Inline Filter (Dual Connection)

Inline Filters protect the blower from harmful dust and other particles that may be drawn into the blower through the air distribution system. Normally used in vacuum systems.

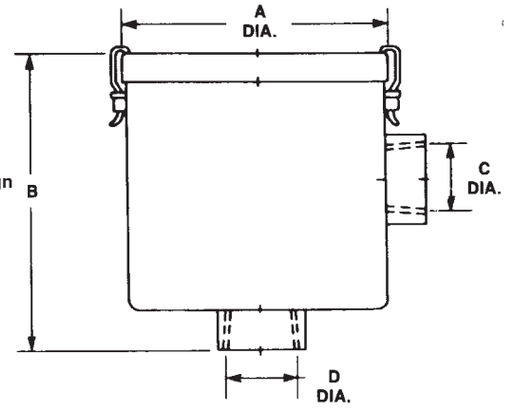

Inline filter PN 271200 is a straight through design
Inlet "C" is directly opposite of outlet "D"

SPECIFICATIONS:

HOUSING – Steel
MEDIA – Polyester
EFFICIENCY – 97-98% (8 to 10 micron particle size)
FILTER ELEMENT – Replaceable (see filter elements)
NOTE: "Z" MEDIA (1 to 3 micron particle size) available

Standard Media Filter P/N	Filter Element	Reference Blower Model	Connection Inlet	Outlet	Dimensions (Inches) A	B	C	D	Z Media Filter Part Number
271200	271078	A	1.75 SO	2.00 SO	5.25	8.31	2.00	1.75	
516461	516434	B	1.00 NPSC-F	1.00 NPSC-F	7.25	6.50	1.00	1.00	517886
515254	516434	C,D	1.50 NPSC-F	1.50 NPSC-F	7.00	6.50	1.50	1.50	517887
515255	516435	E	2.00 NPSC-F	2.00 NPSC-F	8.00	10.25	2.00	2.00	517888
515256	516435	F	2.50 NPSC-F	2.50 NPSC-F	8.00	10.25	2.50	2.50	517889
516463*	515135	G	3.00 NPT-M	3.00 NPT-M	14.00	26.50	3.00	3.00	517890
516465*	515135	H	4.00 NPT-M	4.00 NPT-M	14.00	27.00	4.00	4.00	517891
517611*	516515	H	6.00 NPT-M	6.00 NPT-M	18.00	28.00	6.00	6.00	517892

* Feature 1/4" threaded tap for gauge connection on inlet and outlet

Rev. 2/04

ROTRON® Regenerative Blowers

Blower Model Reference Key	
A = SPIRAL	E = DR/EN/CP 656, 6, 623, S7
B = DR/EN/CP 068, 083, 101, 202	F = DR/EN/CP 707, 808, 858, S9, P9 (Inlet Only)
C = DR/EN/CP 303, 312, 313, 353	G = DR/EN/CP 823, S13, P13 (Inlet Only)
D = DR/EN/CP 404, 454, 513, 505, 555, 523	H = DR/EN/CP 909, 979, 1223, 14, S15, P15 (Inlet Only)

Filtration Accessories

Filter Silencers (Single Connection)

* For Supplemental silencing only. (Used to augment existing muffling systems.)

Filter/Silencers reduce noise levels while ensuring clean air is provided to the blower and the air distribution system. Normally used in pressure applications.

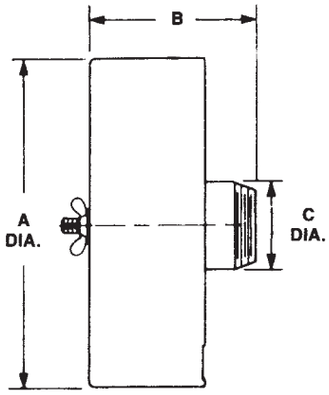

SPECIFICATIONS:

HOUSING – Steel
MEDIA – Polyester
EFFICIENCY – 97-98% (8 to 10 micron particle size)
FILTER ELEMENT – Replaceable (see filter elements)

Standard Media Filter P/N	Filter Element	Reference Blower Model	Connection Inlet	Dimensions (Inches) A	B	C	Z Media Filter Part Number
516487	515132	B	1.00 NPT	6.00	6.50	1.00	517878
516489	515132	C,D	1.50 NPT	6.00	6.50	1.50	517879
516491	515133	E	2.00 NPT	10.00	7.25	2.00	517880
516493	515134	E	2.00 NPT	10.00	12.25	2.00	517881
516495	515134	F	2.50 NPT	10.00	12.50	2.50	517882
516497	515134	G	3.00 NPT	10.00	12.50	3.00	517883
516499	515135	H	4.00 NPT	16.00	14.00	4.00	517884
516513	516515	H	6.00 NPT	16.00	15.00	6.00	517885

Filter Element

All Rotron Air Filters and Filter/Silencers have replaceable filter elements. The filter media is polyester designed for high efficiency over a wide spectrum of industrial applications. See filter element cross reference table. Filter elements supplied with foam pre-filter.

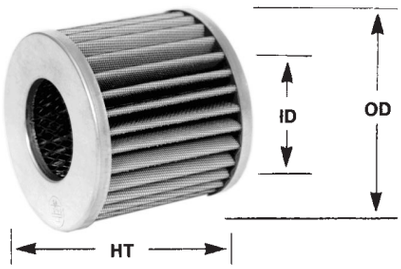

FOR DR BLOWER MODELS

Standard Replacement Filter Element Cross Reference Table					
Filter	Element	Filter	Element	Filter	Element
271200	271078	515158	515134	516489	515132
477411	271078	515254	516434	516491	515133
515122	515132	515255	516435	516493	515134
515123	515133	515256	516435	516495	515134
515124	515134	516461	516434	516497	515134
515125	515134	516463	515135	516499	515135
515145	515134	516465	515135	516511	516515
515151	515135	516466	515132	516513	516515
515157	515133	516487	515132	517611	516515

Standard Media Part Number	Z Media Filter Part Number	ID (Inches)	OD (Inches)	HT (Inches)	Area (Sq/Ft)
515132	517873	3.00	4.38	4.75	1.5
515133	517874	3.63	5.88	4.75	2.3
515134	517875	4.63	5.88	9.50	4.5
515135	517876	4.75	7.88	9.63	8.3
516434	517893	2.56	5.00	4.75	2.0
516435	517894	3.50	5.88	8.75	4.5
516515	517877	8.00	11.75	9.63	19.0

Rev. 2/04

REGENERATIVE BLOWER APPLICATION CHART

Application	Example	Pressure	Vacuum
Aeration	Fish Hatcheries–Sewage	•	
Agitation	Spas–Chemical Baths	•	
By-Product Recovery	Debris–Dental	•	
Cushioning	Printing–Paper	•	•
Drying/Cooling	Film–Paint–Dry Cleaners–Printing	•	•
Exhausting	Clean Rooms–Nonaggressive Fumes	•	•
Material Transport	Small Pellets–Powders		•
Misting	Lubricants–Paint–Printing	•	
Oxygenation	Furnaces–Chemical Baths	•	
Packaging	Blister–Shrink Wrap		•
Pneumatic Conveying	Bank & Mail Systems–Plastics		•
Separation	Printing–Paper	•	•
Degasing	Dairy–Plastic Molding		•

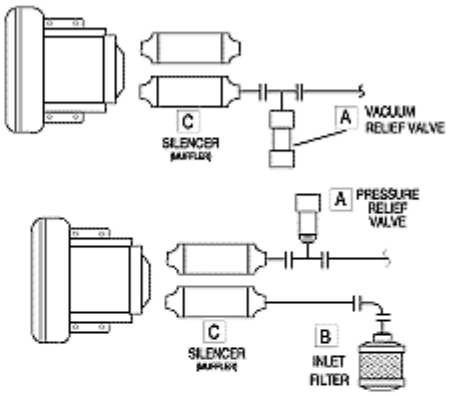

FUJI

Replacement Parts Available
1-800-323-0620

A VACUUM AND PRESSURE RELIEF VALVES

Protect regenerative blowers (ring compressors) from overheating

Relief valves for either vacuum or pressure (deadhead) conditions

Field adjustable for use with other manufacturer's regenerative blowers (ring compressors)

Vacuum and pressure relief valves are preset at minimum air flow or maximum pressure/vacuum level for Fuji regenerative blowers. Field adjustable for Gast, Rotron, Siemens, and Spencer regenerative blowers (see Fuji Regenerative Blower Cross-Reference listed on facing page).

Valve Type	Preset Limit In. / Water (In.)	For Regen. Blower Stock No.	Connection (In.)	Fuji Model	Stock No.	List	Each	Shpg. Wt.
Vacuum	39	5Z187, 5Z649	1½ (F)NPT	VV3	**5Z573**	$128.07	**$117.95**	1.8
	42	4Z751, 4Z752	1½ (F)NPT	VV4	**5Z574**	128.07	**117.95**	2.0
	60	4Z753, 5Z650	1½ (F)NPT	VV5	**5Z575**	128.07	**117.95**	1.8
	86	5Z188	2 (F)NPT	VV6	**5Z576**	147.95	**136.70**	2.7
	85	5Z651	2 (F)NPT	VV7	**5Z652**	147.95	**136.70**	2.3
	100	5Z189, 5F243*	2 (F)NPT	VV8	**5Z653**	147.95	**136.70**	2.3
Pressure	42	5Z187, 5Z649	1½ (M)NPT	PV3	**5Z577**	103.21	**97.10**	1.3
	46	4Z751, 4Z752	1½ (M)NPT	PV4	**5Z578**	103.21	**97.10**	1.5
	68	4Z753, 5Z650	1½ (M)NPT	PV5	**5Z579**	103.21	**97.10**	1.8
	100	5Z188	2 (M)NPT	PV6	**5Z580**	128.07	**117.95**	1.8
	98	5Z651	2 (M)NPT	PV7	**5Z654**	128.07	**117.95**	2.1
	127	5Z189, 5F243*	2 (M)NPT	PV8	**5Z655**	128.07	**117.95**	1.8

(*) 2 required for 5F243.

B INLET FILTERS WITH REPLACEABLE COVERS

Filter particles from inlet air to protect regenerative blowers

Can be used with other manufacturer's regenerative blowers

Inlet filters are specifically designed to protect regenerative blowers (ring compressors) by filtering damaging particles from inlet air. Filters have perforated outer cylinders. Inner cylinder is wrapped with fine (0.009") mesh screen.

Replaceable filter covers are made of 7/8" thick, 100% polyester filter media. Provide 80% efficiency to 5 microns. Can also be used with Gast, Rotron, Siemens, and Spencer regenerative blowers (see Fuji Regenerative Blower Cross-Reference listed on facing page).

INLET FILTERS WITH COVERS									REPLACEMENT FILTER COVERS					
Ht. (In.)	Dia. (In.)	Inlet (M)NPT (In.)	For Regen. Blower Stock Nos.	Fuji Model	Stock No.	List	Each	Shpg. Wt.	For Use With Filter No.	Fuji Model	Stock No.	List	Each	Shpg. Wt.
7⅞	3⅞	1¼	5F241, 4Z749, 5F242 4Z750, 5Z187, 5Z649	F-123	**5Z581**	$95.69	**$87.50**	1.5	5Z581	C-123	**5Z584**	$10.05	**$9.56**	0.2
8	5⅞	1½	4Z751, 4Z752 4Z753, 5Z650	F-45	**5Z582**	106.45	**97.25**	2.3	5Z582	C-45	**5Z585**	12.25	**11.52**	0.1
14	5⅞	2	5Z188, 5Z651	F-67	**5Z583**	128.07	**116.90**	3.1	5Z583	C-67	**5Z586**	14.22	**13.48**	0.5
23½	8¾	3	5Z189, 5F243	F-89	**5F244**	338.20	**311.75**	8.5	5F244	C-89	**5F245**	21.76	**20.62**	0.3

C MUFFLERS

Specifically designed for quieting regenerative blowers operating for pressure or vacuum

One muffler will lower sound level (at 1 meter) by 5 dBa

Mufflers for use in environments where noise level reduction is desired or required to comply with specified or regulated noise levels. Mufflers will reduce noise levels by 5 dBa; a 3 dBa reduction lowers noise levels by 50%. Can be used on inlet and/or outlet side and/or in the pressure relief valve circuit.

Inlet (F)NPT (In.)	For Fuji Regenerative Blower Stock Nos.	Dimensions (In.) L	Dia.	Fuji Model	Stock No.	List	Each	Shpg. Wt.
1	5F241, 4Z749, 5F242, 4Z750	12	2½	VFY-021A	**5F246**	$54.01	**$49.45**	3.0
1¼	5Z187, 5Z649	12	2½	VFY-023A	**5F247**	59.96	**55.15**	2.5
1½	4Z751, 4Z752, 5Z650, 4Z753	12	3	VFY-024A	**5F248**	92.86	**85.50**	3.6
2	5Z188, 5Z651	15¾	3½	VFY-026A	**5F249**	124.71	**114.60**	5.3
2½	5Z189	21	4½	VFY-028A	**5F250**	201.35	**191.25**	9.8
3	5F243	26	5	VFY-029A	**5F251**	275.02	**253.75**	13.0

Series FR5500 Acrylic Flowmeters

KEY INSTRUMENTS

250 Andrews Road, Trevose, PA 19053

800.356.7483 • 215.357.0893
Fax:215.357.9239

www.keyinstruments.com
e-mail:sales@keyinstruments.com

SERIES FR5500 ACRYLIC FLOWMETERS

SPECIFICATIONS	
ACCURACY	+/-5% OF FULL SCALE
METER BODY	MACHINED ACRYLIC METERING TUBE
FLOAT	STAINLESS STEEL
FITTINGS	1-1/2" OR 2" FNPT UNION FITTINGS MADE OF PVC OR STAINLESS STEEL
O-RINGS	VITON®
PRESSURE	100 PSIG MAXIMUM OPERATING PRESSURE
TEMPERATURE	150°F/65°C MAXIMUM OPERATING TEMPERATURE

FEATURES

- Easy-to-read scales for GPM or LPM H_20 and SCFM or LPM air
- Durable one-piece clear acrylic construction
- Stable, easy-to-read stainless steel floats
- Integrated union fittings for easy installation
- PVC or stainless steel fitting options
- Easy disassembly and assembly for maintenance
- Superior quality

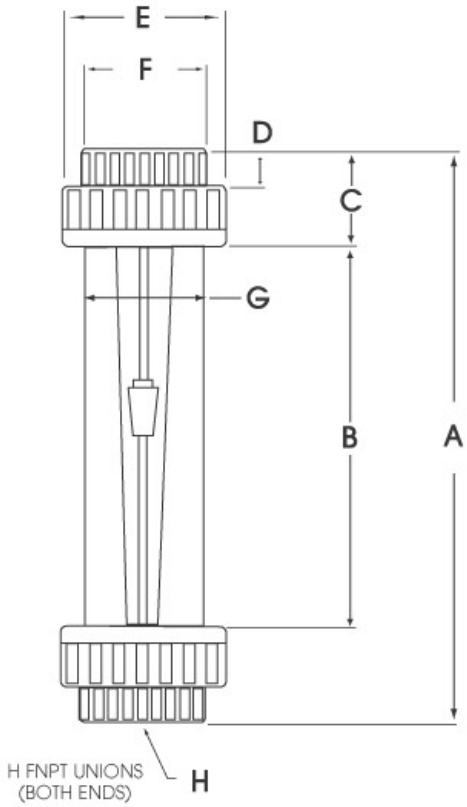

SERIES FR5500 FLOW RATES- 1-1/2" MODELS			
Model	SCFM AIR*	Model	LPM AIR*
5A75	10-110	5A87	300-3000
5A76	15-160	5A88	450-4600
5A77	20-200	5A89	550-5500
Model	GPM H_2O	Model	LPM H_2O
5L78	3-30	5L90	10-120
5L79	4-40	5L91	15-150
5L80	5-50	5L92	20-200

*Air Ranges-Stainless Steel Fittings Only

SERIES FR5500 FLOW RATES- 2" MODELS			
Model	SCFM AIR*	Model	LPM AIR*
5A81	25-250	5A93	700-7000
5A82	30-330	5A94	800-9000
5A83	40-400	5A95	1000-11000
Model	GPM H_2O	Model	LPM H_2O
5L84	6-60	5L96	25-230
5L85	8-80	5L97	30-300
5L86	10-100	5L98	40-400

VITON® IS A REGISTERED TRADEMARK of E.I. DUPONT.

ORDERING EXAMPLE

FR	MODEL CODE	FITTINGS
	5A81	SI

SAMPLE: FR5A81SI
25-250 SCFM AIR with 2" SI UNIONS

FITTINGS:
PI=PVC
SI=Stainless steel

	FR5500		Dimensions		Inches		
H	A	B	C	D	E	F	G
1-1/2" PVC	13-1/4	9	2-1/4	7/8	3-1/2	2-1/2	2-1/2
1-1/2" S.S.	13-3/8	9-1/8	2-1/8	7/8	3-1/2	2-1/2	2-1/2
2" PVC	13-7/8	8-15/16	2-1/2	1	4-1/8	3-1/16	3
2" S.S.	13-1/2	9-3/16	2-5/32	15/16	4	3	3

KEY INSTRUMENTS

250 Andrews Road, Trevose, PA 19053

800.356.7483 • 215.357.0893
Fax:215.357.9239

www.keyinstruments.com
e-mail:sales@keyinstruments.com

Sept. 2001

Pressure & Temperature Probes For Pete's Plug II®

For Pete's Plugs click here

Take pressure or temperature readings quickly

Pressure or Temperature Tests

This system allows you to quickly take pressure and temperature readings with the line pressurized. It reduces the need for costly permanent installation of gauges and recorders.

Suggested Project Specifications

Pressure and temperature test stations: Install a "Pete's Plug II" into a 1/4" fitting to receive either a 1/8" OD temperature or pressure probe. Fitting shall be solid brass with two valve cores of Neoprene (Max 200 F) at 500 psi, or Nordel (Max 275 F) at 500 psi, fitted with a color coded cap strap with gasket, and shall be rated at 1000 psi at 140 F. The installing contractor shall supply the owner with pressure gauge adapters with 1/8" OD probe and five inch stem pocket testing thermometers 25-125 F for chilled water and 0-220 F or 50-500 F for hot water.

Pressure Gauge

The pressure gauge adapter has a probe constructed of 304 stainless steel. The probe is 1/8" in diameter and extends 2" (1 1/2" exposed probe) on the 31-500 adapter and 3 1/2" (3" exposed probe) on the 31-500 L adapter. The 1/8" diameter probe is less likely to become clogged with foreign material and resists bending. Also, the 1/8" diameter probe operates in either the 1/4", 3/8", or 1/2" Pete's Plug. Please note the 31-500 L gauge adapter will operate in any of the Pete's Plug's.

Temperature Gauge

The test thermometer is constructed of stainless steel, has a 1 3/4" dial and has a bi-metallic sensing element. Accuracy within 1/2 over the entire scale can be expected. Pointer adjustment or recalibrations can be made by turning the hex nut on the back of the dial case while firmly holding the dial case. The stem should be immersed in a known, controlled temperature bath. Stem lengths are 5" and diameters of 0.156" or 4mm are maximum diameters that can be inserted onto the Pete's Plug. Digital thermometers have the same specifications, but can not be recalibrated in the field.

Pressure and Temperature Test Kits

With Protective Carrying Case, Your choice $243.00 each

31-1500 Contains:

- 1 ea 31-601
- 1 ea 31-603
- 1 ea 31-800B
- 2 ea 31-500 (one is attached)

31-1500XL Contains:

- 1 ea 31-601
- 1 ea 31-603
- 1 ea 31-800B
- 1 ea 31-500 L (attached)

Gauge Probe Adapters		
(All connections 1/4" NPTF)	Item Number	Unit Price Each
Gauge adapter with 1/8" x 1 1/2" probe	31-500	25.90
Gauge adapter with 1/8" x 3" probe (L plugs)	31-500 L	52.90
Gauge adapter with 1/16" x 1 1/2" probe (31-12500)	31-510	34.90
Gauge adapter (1/8" x 1 1/2" probe - all 316 SS)	31-520	61.90

Bi-metal Pocket Testing Thermometers			
5" Stem With External Calibration		Item Number	Unit Price Each
Range	Degree Division		
-40 to 160 F	2	31-600	69.60
25 to 125 F	1	31-601	69.60
0 to 220 F	2	31-603	69.60

Digital Pocket Testing Thermometers

5" Stem		Item Number	Unit Price Each
Range	Degree Division		
-58 to 571 F	0.1	31-606	75.60
Compound Pressure Gauge			
Range		Item Number	Unit Price Each
0-100 psi, 0-700 kPa		31-800B	30.60

Price subject to change without notice

Petersen Terms & Conditions Apply

U.S. Patent No. 5079962 Canadian Patent No. 981192. Patent pending in United States and other countries. All patents are sole property of the Peterson Equipment Company, Inc. A trademark of the Peterson Equipment Company, Inc.

Table of Contents

Petersen Terms & Conditions

Petersen Products Co. P.O. Box 340 421 Wheeler Avenue Fredonia, Wisconsin 53021-0340
800-926-1926 Fax 800-669-1434 (262) 692-2416 Fax (262) 692-2418

Pete's Plug II® 1/8" to 1/2"

For Pressure & Temperature Probes For Pete's Plugs II®

Take pressure or temperature readings quickly

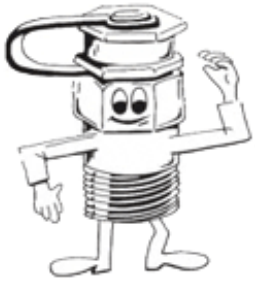

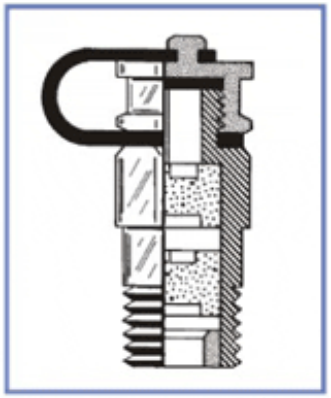

Patent Number 5,079,962

Pete's Plug II will allow you to take pressure or temperature readings - quickly and eliminate the need for leaving costly gauges or temperature indicators on the line.

Depending on the application, the Pete's Plug can be operated to a maximum of 500 psig and 200 F or 275 F for neoprene or nordel respectively. Maximum working pressures of 1000 psig can be attained with neoprene or nordel at temperatures from 140 F to -20 F.

Pete's Plug II is available in various pipe thread sizes, lengths, and materials to satisfy each application. The L Pete's Plug will allow you to insulate the test point and not completely cover the Pete's Plug. The L Pete's Plug eliminates extra fittings for insulated applications.

Applications

In general the Pete's Plug is a time and money saving device which is well suited for most plant and pipeline systems and is designed to eliminate gauge cocks and thermometer wells. Hot and chilled water systems, heat exchangers, pumps, differential readings, air, gas lines, and numerous other applications are only a few of the areas where the Pete's Plug are presently being used.

Valve Materials

Neoprene is a chloroprene based synthetic rubber and is resistant to deterioration from waxes, fats, oils, greases, petroleum products, and most refrigerants.

Nordel is an ethylene-propylene based synthetic rubber and gives excellent service in hot and cold water and in some applications of low steam. Nordel is resistant to detergents, phosphate esters, ketone, alcohols, and glycols. It is not suitable for petroleum products.

Neoprene and nordel are proprietary materials and the information presented herein is believed to be accurate and reliable. We can assume no liability for results obtained or damages incurred through the application of this information. The information is intended as a guide and if in doubt ask

How to Operate

The Pete's Plug II is permanently installed in the line at recommended test points. The cap protects the valve and provides an additional seal. After the cap has been removed, either a test thermometer or a gauge adapter with the proper pressure gauge can be inserted through the two, self-closing valves in the Pete's Plug II. Readings are made, adjustments or test can be accomplished and when the probes are withdrawn, the two valves close. The protective cap is then reinstalled. Tests should be made as quickly as possible since the valve reseal time is dependent upon time of insertion, time, and pressure. Slower valve reseal time can be expected at lower temperature and lower pressures.

Pete's Plugs II®

Size	Length		Body & Cap Material	Valve Core Material	Item Number	Unit Price Each
	in	mm				
1/8" npt	1.25	31	Brass	Neoprene	31-12500	12.00
1/4" npt	1.5	38	Brass	Neoprene	31-100	7.20
1/4" npt	1.5	38	Brass	Nordel	31-110	7.20
1/4" npt	3	76	Brass	Neoprene	31-100 L	12.40
1/4" npt	3	76	Brass	Nordel	31-110 L	12.40
1/4" npt	1.5	38	316 SS	Neoprene	31-400	36.80
1/4" npt	1.5	38	316 SS	Nordel	31-410	36.80
3/8" npt	1.5	38	Brass	Neoprene	31-300	18.00
3/8" npt	1.5	38	Brass	Nordel	31-310	18.00
1/2" npt	1.5	38	Brass	Neoprene	31-700	11.50
1/2" npt	1.5	38	Brass	Nordel	31-710	11.50

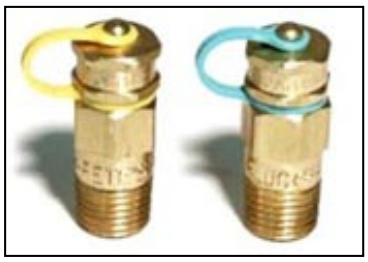

1/2" npt	3	76	Brass	Neoprene	31-700 L	17.20	
1/2" npt	3	76	Brass	Nordel	31-710 L	17.20	

Valve Core Material	Maximum Temperature	Maximum Pressure	Strap Color Code	Valve Body Connection
Neoprene	200 F	500 psig	Blue	1/4" npt (only) 316 Stainless Steel
Nordel	275 F	500 psig	ellow	1/4" npt, 3/8", 1/2" npt - Brass

Valve Core Material	Identification	Valve Core and Body Material Identification
Brass	Plain Body Hex Head	Blue strap - neoprene
316 Stainless Steel	Groove Body Hex Head	ellow strap - nordel Two grooves - 316SS

Cap retaining straps are standard on all brass plugs.

U.S. Patent No. 5079962 Canadian Patent No. 981192. Patent pending in United States and other countries. All patents are sole property of the Peterson Equipment Company, Inc. A trademark of the Peterson Equipment Company, Inc.

Table of Contents

Petersen Terms & Conditions

Petersen Products Co. P.O. Box 340 421 Wheeler Avenue Fredonia, Wisconsin 53021-0340
800-926-1926 Fax 800-669-1434 (262) 692-2416 Fax (262) 692-2418

PVC WHITE SCHEDULE 40 FITTINGS UNIONS & SADDLES

CLAMP-ON SADDLE x SOCKET SINGLE OUTLET (continued)

Listed Part No. Applicable to
466S-XXX 466E-XXX 466SE-XXX

2" - 4" 235 psi @ 73°F
6" 200 psi @ 73°F
8" - 12" 150 psi @ 73°F

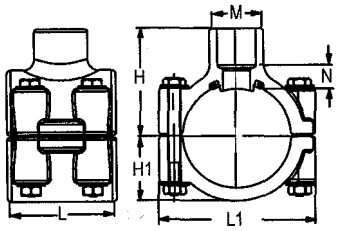

Part Number	Size	H	H1	L	L1	M	N	Approx. Wt. (Lbs.)
466-335	3x1	3-3/16	2-1/16	3	4-5/8	1-11/16	5/16	.87
466-336	3x1-1/4	4-1/32	2-1/16	4-3/32	4-5/8	3	1-1/32	1.47
466-337	3x1-1/2	4-1/32	2-1/16	4-3/32	4-5/8	3	29/32	1.41
466-338	3x2	3-5/8	2-1/16	4-3/32	4-5/8	3	3/8	1.25
466-415	4x1/2	4-3/32	2-5/8	3	5-9/16	2-3/8	31/32	1.31
466-416	4X3/4	4-3/32	2-5/8	3	5-9/16	2-3/8	27/32	1.28
466-417	4x1	3-13/16	2-5/8	3	5-5/8	1-11/16	7/16	1.24
466-418	4x1-1/4	4-13/32	2-5/8	4-3/32	5-5/8	2-3/8	29/32	1.70
466-419	4x1-1/2	4-1/8	2-5/8	4-3/32	5-9/16	2-3/8	1/2	1.63
466-420	4x2	4-3/16	2-5/8	4-1/8	5-5/8	3	7/16	1.70
466-421	4x2-1/2	5	2-5/8	5-7/16	5-23/32	4-9/32	3/4	2.82
466-422	4x3	4-5/8	2-19/32	5-7/16	5-11/16	4-1/4	1/2	2.41
466-523	6x1/2	5-13/32	3-7/8	3	7-3/4	1-11/16	1-7/32	2.35
466-524	6x3/4	5-7/16	3-7/8	3	7-3/4	1-11/16	1-1/8	2.32
466-525	6x1	5-1/8	3-7/8	3	7-15/16	1-11/16	11/16	2.29
466-526	6x1-1/4	5-15/16	3-7/8	4-1/8	7-3/4	3	1-3/8	3.26
466-527	6x1-1/2	5-15/16	3-7/8	4-1/8	7-3/4	3	1-1/4	3.20
466-528	6x2	5-1/2	3-7/8	4-1/8	7-3/4	3	11/16	3.04
466-529	6x2-1/2	6-7/16	3-7/8	6	7-15/16	4-1/4	1-1/8	4.75
466-530	6x3	5-15/16	3-7/8	6	7-15/16	4-1/4	25/32	4.33
466-532	6x4	6	3-29/32	6	7-15/16	5-3/16	5/8	5.12
466-573	8x1/2	8-3/32	4-7/8	8-1/2	10-1/8	5-1/4	2-3/16	9.35
466-574	8x3/4	8-3/32	4-7/8	8-1/2	10-1/8	5-1/4	2-3/4	9.36
466-575	8x1	8-3/32	4-7/8	8-1/2	10-1/8	5-1/4	2-5/8	9.37
466-576	8x1-1/4	8-3/32	4-7/8	8-1/2	10-1/8	5-1/4	2-1/2	9.39
466-577	8x1-1/2	8-3/32	4-7/8	8-1/2	10-1/8	5-1/4	2-3/8	9.32
466-578	8x2	7-11/16	4-7/8	8-1/2	10-1/8	5-1/4	1-7/8	9.17
466-579	8x2-1/2	8-1/8	4-7/8	8-1/2	10-1/8	5-1/4	1-11/16	9.24
466-580	8x3	7-1/16	4-7/8	8-1/2	10-1/8	5-1/4	1-7/16	9.15
466-582	8x4	7-5/16	4-7/8	8-1/2	10-1/8	5-1/4	11/16	8.35

Made in the U.S.A.

HANDHELD DIGITAL MANOMETER KIT

Measures positive, negative, or differential air pressure
Ideal for field calibration, monitoring, or troubleshooting HVAC systems, clean rooms, or low pressure pneumatic systems
Measures non-corrosive, non-toxic gases
1/2" LCD display with low battery indication
Provides air velocity measurement when used with a pitot tube
Dual size pressure connectors fit 1/8" or 3/16" I.D. vinyl or rubber tubing
User selectable ranges of 0-19.99" WC or 0-4.97 KPa
±0.5% full scale accuracy
Maximum pressure, 11 PSI or 75 KPa; ambient operating temperature, 32-122°F
Kit includes: 4JZ78, two 1W401 static pressure tips, two 9-ft. lengths 3/16" I.D. rubber tubing, No. 166-6 CF pilot tube, A-397 step drill, A-532 air velocity slide chart, and instruction bulletin. Packed in tough molded plastic carrying case with foam liner. 9V alkaline battery

No. 6T604. Dwyer brand (475-1AV). Shpg. wt. 3.5 lbs.
Each **$360.25**

HANDHELD DIGITAL MANOMETERS

Similar to 6T604 above, but kit is not included
Basic meter has the same features as meter No. 6T604, but different ranges
No. 4JZ78 range 0-19.99 water column or 0-4.97 KPa; maximum pressure 11 PSI (75 KPa)
No. 1W435 range 0-40.0" water column or 0-9.95 KPa; maximum pressure 11 PSI (75 KPa)
No. 1W433 range 0-199.9" water column or 49.7 KPa; maximum pressure 11 PSI (75 KPa)
No. 4JZ79 range 0-100 PSI or 0-6.89 bar; maximum pressure 150 PSI (10 bar)
Accuracy (typ.): ± 0.5% full scale

No. 4JZ78. Dwyer brand (475-1). Shpg. wt. 1.2 lbs. Each **$209.50**
No. 1W435. Dwyer brand (475-2). Shpg. wt. 0.7 lbs. Each...**$209.50**
No. 1W433. Dwyer brand (475-3). Shpg. wt. 0.7 lbs. Each...**$209.50**
No. 4JZ79. Dwyer brand (475-7). Shpg. wt. 1.2 lbs. Each **$209.50**

HANDHELD DIGITAL MANOMETERS

Measure noncorrosive, non-toxic gases
Measure positive, negative, or differential pressures
Used for laboratory testing, field calibration, and HVAC systems
Dual size pressure connectors fit 1/8" or 3/16" ID vinyl or rubber tubing
Instant selection from up to nine English/Metric units
Store 20 readings in memory for later reference
Large, easy-to-read 0.4" LCD display includes switchable backlight for great visibility
Both audible and visual overpressure alarms

Operating Range (English) Inches W.C.	Operating Range (Metric) KPA	Maximum Pressure PSI (bar)	Dwyer Model	Stock No.	Each	Shpg. Wt.
0-20	0-5	11 (0.75)	477-1	4JZ80	$275.50	1.2
0-40	0-10	11 (0.75)	477-2	4JZ81	275.50	2.4
0-200	0-50	29 (1.99)	477-3	4JZ82	275.50	2.4
0-10 PSI	0-70	58 (3.99)	477-4	4JZ83	275.50	1.0
0-30 PSI	0-200	58 (3.99)	477-5	4JZ84	275.50	1.0

ACCESSORIES

Gray nylon pouch for Nos. 1W435, 1W433, 4JZ78, 4JZ79.
No. 1W393. Dwyer brand (A402). Shpg. wt. 0.8 lbs.
Each **$20.59**

No. 6T604

No. 4JZ78

No. 4JZ80

No. 4KF87

Replacement Parts Available
1-800-323-0620

PORTABLE MICROMANOMETER AND TEST KIT

Pressure Range: 0-19.99 in. H_2O
Resolution: 0.01 in. H_2O
Operating Temperature: 14 to 122°F
Dimensions: 7.9 x 3.2 x 1.3"
One 9V battery provides 100 hours of continuous use
Accuracy: ±2.5% of indicated reading
2 Year warranty
Includes protective pouch and manual.

No. 4KF74. Alnor brand (AXD 510). Shpg. wt. 1.0 lbs.
Each **$275.00**

Portable Micromanometer Test Kit includes: No. 4KF74 micromanometer, 18" pitot probe, two static pressure tubes, 8 ft. rubber hose, 100 piece duct plug kit (No. 4KF73) and carrying case.

No. 4KF87. Alnor brand (AXD 512). Shpg. wt. 5.0 lbs.
Each **$358.00**

KDT Series

ISO 9001 Certified
CE Compliant

100% OIL-LESS COMPRESSORS

The Becker KDT series is a line of 100% Oil-less, rotary vane, low pressure compressors. They are designed to operate on a continuous basis throughout a pressure range from atmospheric pressure to 22 PSIG.

Each KDT unit is a direct drive compressor and is supplied with a TEFC flange mounted electric motor. Each unit is equipped with inlet and discharge filters, a pressure regulating valve, and vibration isolators as standard equipment, all of which are an integral part of the compressor.

The Becker KDT compressor is ideal for applications where air is the gas and where operation is in the low pressure range where high pressure compressors are less efficient. Applications for the KDT compressor include graphic arts, soil remediation, pneumatic conveying, robotics and material handling, packaging, and paper converting.

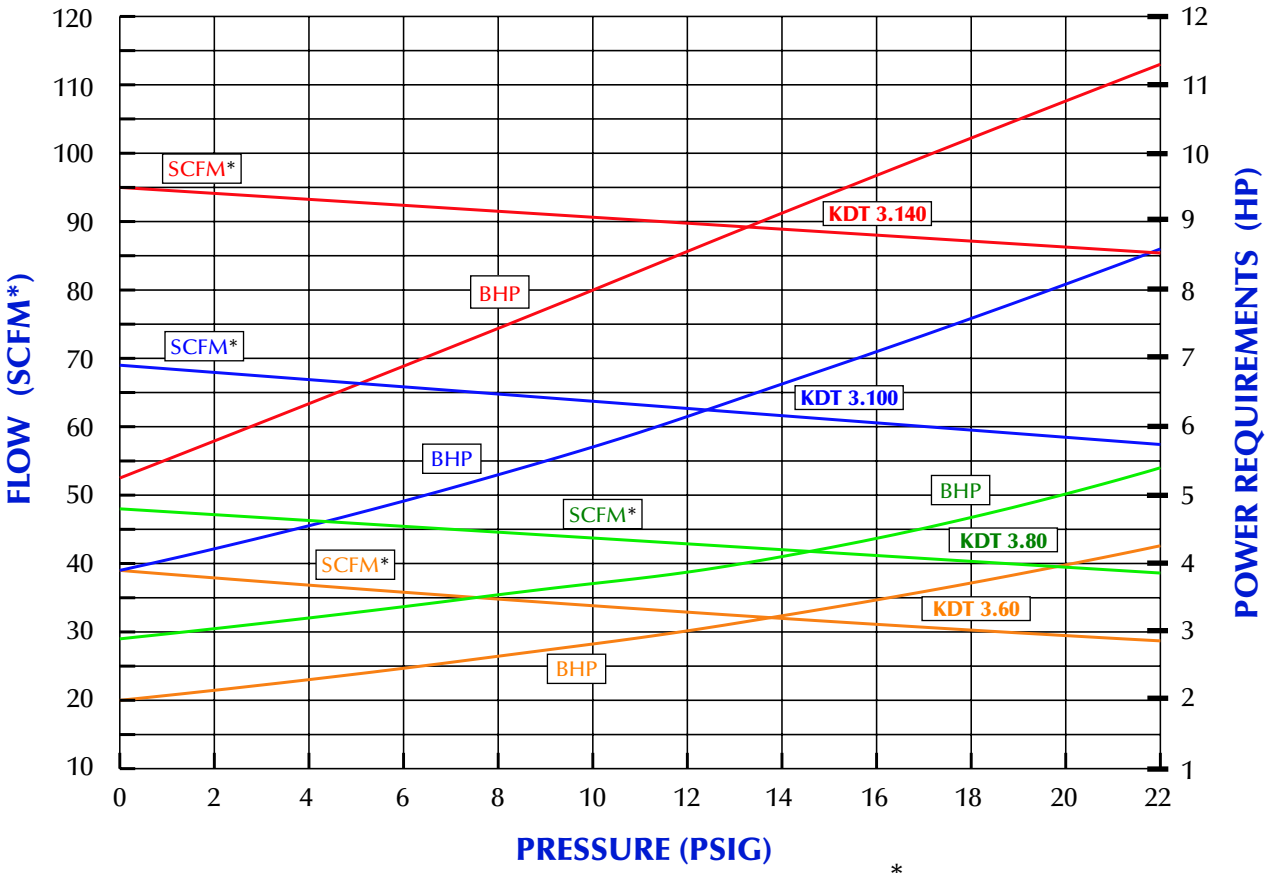

* @ 29.92" Hg Bar. Pr.; 68°F; 36% R.H.; 0.075#/ft³

Becker Pumps Corp. • 100 East Ascot Lane • Cuyahoga Falls, Ohio 44223-3768
Ph. (330) 928-9966 · (888) 633-1083 · FAX: (330) 928-7065 · info@beckerpumps.com · www.beckerpumps.com

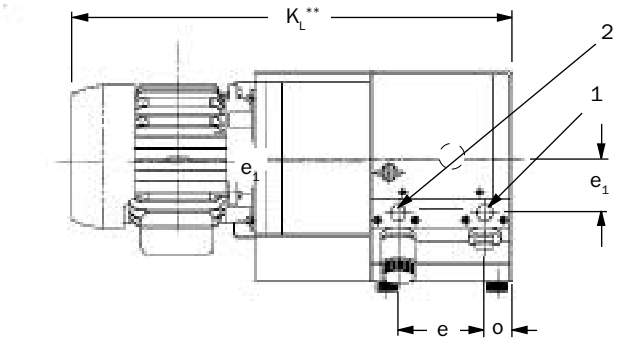

Top View

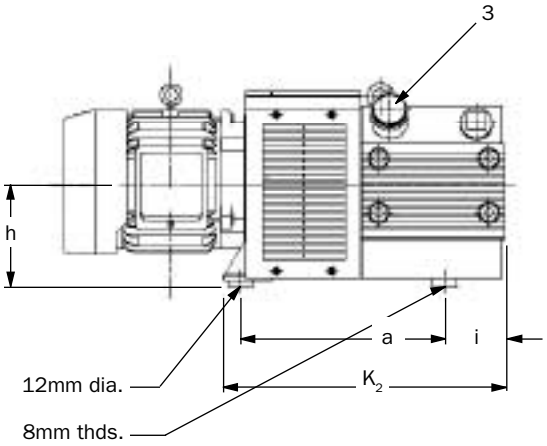

Side View

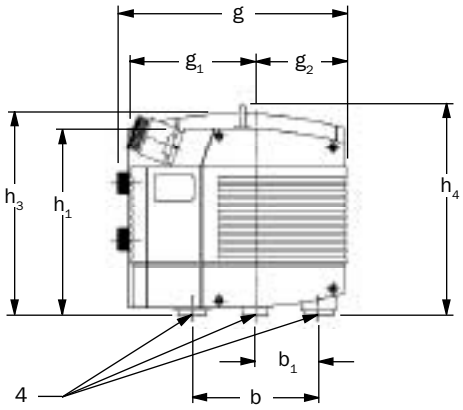

End View (Opposite Motor End)

All data based on 60 Hz operation	KDT 3.60	KDT 3.80	KDT 3.100	KDT 3.140
Flow (SCFM @ 0 PSIG)	39	48	69	95
Horsepower	5*	$7^1/_2$*	10*	12*
Speed (RPM)	1740	1740	1740	1740
Maximum Pressure (PSIG)	22	22	22	22
Weight (lbs.)—w/o motor	104	108	156	172
Weight (lbs.)—w/ motor**	191*	265*	323*	368*
Noise Level (Max. dBA)	74	76	78	84
Outlet size (BSP, inches)	1	1	$1^1/_2$	$1^1/_2$
Dimensional Data	(Inches)			
a	12.83	12.83	15.67	15.67
b	7.5	7.5	9.65	9.65
b_1	3.75	3.75	4.82	4.82
e	5.43	5.43	7.5	7.5
e_1	2.56	2.56	3.75	3.75
g	13.9	13.9	18.5	18.5
g_1	7.68	7.68	8.78	8.78
g_2	5.55	5.55	9.06	9.06
h	6.38	6.38	6.38	6.38
h_1	11.38	11.38	11.7	11.7
h_3	12.28	12.28	13.0	13.0
h_4	12.9	12.9	13.25	13.25
i	3.78	3.78	5.5	5.5
k_2	17.64	17.64	22.17	22.17
k_L	28.2	30	34.15	36.6
o	1.81	1.81	2.36	2.36

Manufacturer reserves right to alter data without notice.
* Operation at lower pressure may use smaller motor.
** May vary with motor type and manufacturer

1 - Inlet Port
2 - Discharge Port
3 - Pressure Relief Valve
4 - Vibration Isolators

3LIT0006 • 2/00

Becker Pumps Corp. • 100 East Ascot Lane • Cuyahoga Falls, Ohio 44223-3768
Ph. (330) 928-9966 · (888) 633-1083 · FAX: (330) 928-7065 · info@beckerpumps.com · www.beckerpumps.com

Data

Rietschle Thomas
A Thomas Industries Company

Compressors | Compresores | Compresseurs | Compressores

DTA

DRUVAC

DTA 50
DTA 60
DTA 80
DTA 100
DTA 140

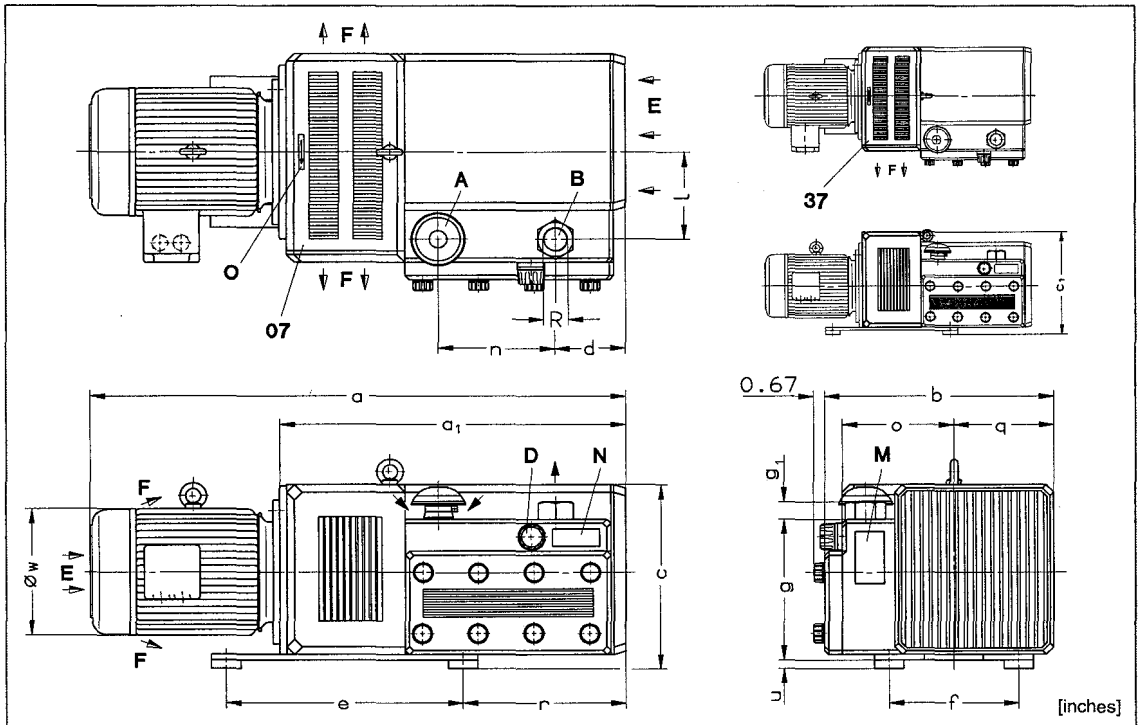

(07)	Two side cooling air exit	Salida bilateral aire refrigerante	Sortie air refroidissement bi-côté	Saída bilateral do ar refrigerante
(37)	One side cooling air exit	Salida unilateral de aire refrigerante	Sortie air refroidissement mono-côté	Saída unilateral do ar refrigerante
A	Suction	Succión	Aspiration	Sucção
B	Pressure connection	Conexión presión	Raccord surpression	Conexão da pressão
D	Pressure regulating valve	Válvula reguladora de presión	Valve de réglage pression	Válvula de regulagem da pressão
E	Cooling air entry	Entrada aire refrigerante	Entrée air refroidissement	Entrada do ar refrigerante
F	Cooling air exit	Salida aire refrigerante	Sortie air refroidissement	Saída do ar refrigerante
M	Greasing label	Rótulo engrase	Etiquette graissage	Rótulo da lubrificação
N	Data plate	Placa fecha	Etiquette caractéristique	Placa da data
O	Rotation arrow	Dirección de rotación	Flèche sens rotation	Direção da rotação

DTA			50		60		80		100		140	
kw		50 Hz	2.2	3.0	2.2	3.0	3.0	4.0	4.0	5.5	5.5	7.5
hp		60 Hz	5.0		5.0		5.0	7.5	7.5	10	10	15
[inches]	a	50 Hz	28.50		30.35		30.35	31.02	34.25	38.39	38.39	
		60 Hz	29.32		31.96		31.96	34.73	37.96	39.28	39.28	42.94
	a (1~)	60 Hz	-		34.10		34.10	-	-		-	
	a_1	50 Hz	15.79		18.43		18.43		21.65	22.44	22.44	
		60 Hz	16.02		18.66		18.66	19.17	22.40		22.40	23.03
	b		11.65		15.28		15.28		15.28		15.28	
	c		10.24		12.60		12.60		12.60		12.60	
	c_1		-		14.41		14.41		14.41		14.41	
	d		1.97		3.03		3.03		3.35		3.35	
	e		12.60		15.75		15.75		15.75		15.75	
	f		6.30		8.27		8.27		8.27		8.27	
	g / g_1		7.83 / 0.98		9.80 / 1.18		9.80 / 1.18		9.80 / 1.18		9.80 / 1.18	
	l		4.76		5.87		5.87		6.10		6.10	
	n		5.59		5.75		5.75		7.95		7.95	
	o		5.67		7.48		7.48		7.48		7.48	
	q		5.16		6.69		6.69		6.69		6.69	
	r		6.18		6.54		6.54		9.76		9.76	
	u		0.79		0.59		0.59		0.59		0.59	
	øw	50 Hz	7.72		7.72		7.72	8.66	8.66	9.69	9.69	
		60 Hz	8.49		8.49		8.49	10.34	10.34		10.34	11.47
			-		8.91		8.91	-	-		-	
	R		3/4" NPT		1" NPT		1" NPT		1 1/4" NPT		1 1/4" NPT	

DA 355

1.1.2004

Rietschle Thomas Hanover Inc.
7222 Parkway Drive
HANOVER, MD 21076
USA
Fon 410-712-4100
Fax 410-712-4148
E-Mail: sales@vacuumpumps.com
http://www.vacuumpumps.com

DTA		50		60		80		100		140	
cfm	50 Hz	30.6		34.1		43.0		57.1		74.2	
	60 Hz	36.5		41.2		51.8		68.3		88.9	
psig	50 Hz	13.1	21.8	10.2	21.8	13.1	21.8	14.5	21.8	17.4	21.8
	60 Hz	10.2	21.8	21.8		11.6	21.8	14.5	21.8	14.5	21.8
3~	50 Hz	230/400V ± 10%							400/690V ± 10%		
	60 Hz	208-230/460V ± 10%									
1~	60 Hz	-		230V ± 10%				-			
kw	50 Hz	2.2	3.0	2.2	3.0	3.0	4.0	4.0	5.5	5.5	7.5
hp	60 Hz	5.0		5.0		5.0	7.5	7.5	10	10	15
A (3~)	50 Hz	5.0	8.5/4.9	10.0/5.9	11.4/6.6	12.2/7.1	15.0/8.8	15.0/8.8	12.0/6.9	12.0/6.9	16.5/9.5
	60 Hz	15-13.2/6.6		15-13.2/6.6		15-13.2/6.6	21.5-20/10	21.5-20/10	28-26/13	28-26/13	38.7-38/19
A (1~)	60 Hz	-		23		23	-	-		-	
rpm	50 Hz	1450									
	60 Hz	1740									
dB(A)	50 Hz	71		72		74		76		78	
	60 Hz	73		74		76		78		80	
lbs (3~)	50 Hz	141	150	190	198	214	232	236	276	298	353
	60 Hz	176		225		240	283	289	304	326	397
lbs (1~)	60 Hz	-		251		266	-	-		-	

ZRK	20 (03)	25 (03)	25 (03)	32 (03)	32 (03)
ZAF	20 (50)	25 (50)	25 (50)	32 (50)	32 (50)

cfm	Capacity	Capacidad	Volume engendré	Capacidade
psig	Excess pressure	Exceso de presión	Surpression	Pressão excessiva
3~	Motor version	Versión motor	Exécution moteur	Versão do motor
kw / hp	Motor rating	Datos motor	Puissance moteur	Potência do motor
A	Full load amperage	Amperaje de plena carga	Intensité absorbée	Amperagem da carga total
rpm	Speed	Velocidad	Vitesse rotation	Velocidade
dB(A)	Average noise level	Nivel de ruido medio	Niveau sonore moyen	Nível médio de ruído
lbs	Weight	Peso	Poids	Peso
	Accessories	Accesorios	Accessoires	Acessórios
ZRK	Non return valve	Válvula retención	Clapet anti-retour	Válvula sem retorno
ZAF	Suction filter	Filtro succión	Filtre d'aspiration	Filtro de sucção
ZMS	Motor starter	Arranque motor	Disjoncteur moteur	Arranque do motor

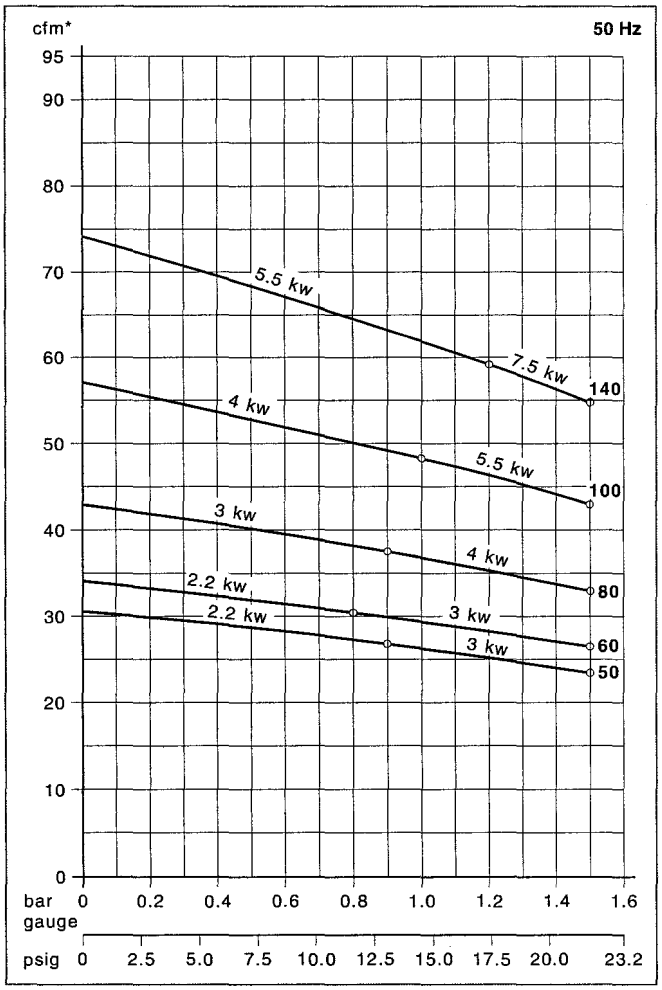

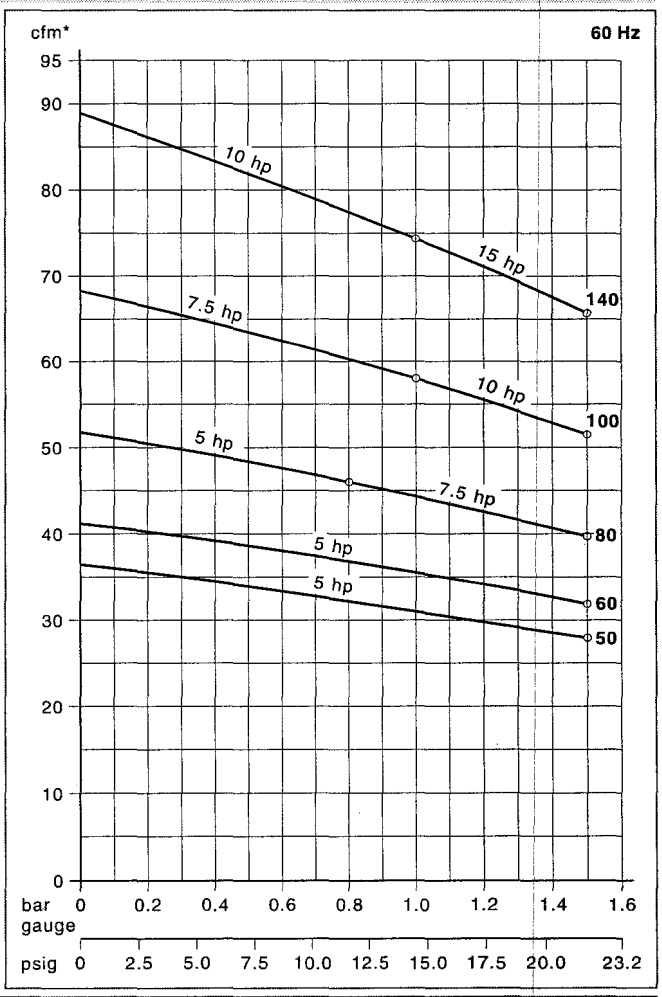

* Capacity refers to free air at 1 standard atmosphere and 20° C (68° F)./ La capacidad se refiere al aire libre a 1 atmosfera estandár de presión y a 20° C (68° F) de temperatura./ Le débit est mesuré à l'atmosphère de 1 bar (abs.) à 20° C (68° F)./ A capacidade refere-se ao ar livre a uma atmosfera padrão 1 e a 20° C (68° F).
Curves and tables refer to compressor at normal operating temperature./ Las curvas y las tablas se refieran al compresor a la temperatura normal de operación./ Les courbes et tableaux sont établies, compresseur à température de functionnement./ As curvas e tabelas referem-se ao compressor a temperatura normal de operação.
Technical information is subject to change without notice!/ La información técnica está sujeta a cambios sin previo aviso!/ Sous réserve de modification technique./ A informação técnica está sujeita a mudança sem aviso prévio!
The listed values for a, ø w and full load amperage may vary because of different motor manufacturers./ Los valores listados para a, ø w y para el amperaje de carga completa pueden variar para distintos fabicantes de motores./ Les dimensions a et ø w ainsi que l'ampérage peuvent différer des données indiquées ci-dessus, selon le fabricant du moteur./ Como variam os fabricantes de motores, poderá haver variação dos valores indicados para a, ø w e para uma amperagem da carga total.

COMPACT "L" STYLE INLET VACUUM AIR FILTERS
"CSL" Series 3/8" - 3" FPT

APPLICATIONS

- Blowers-Side Channel
- Factory Automation
- Leak Detection
- Medical
- Printing Industry
- Soil Venting/Remediation
- Vacuum Lifters
- Vacuum Packaging
- Vacuum Pumps & Systems
- Woodworking

FEATURES & SPECIFICATIONS

- 99 removal efficiency std: Paper 2 micron, Polyester 5 micron
- Filter change out differential: 10"-15" in. H_2O above initial Delta P
- Positive sealing O-ring seal system
- Rugged all steel construction with baked enamel finish
- Stainless steel torsion clips for durability
- Vacuum level: Typically $1x10^{-3}$ mmHg ($1.3x10^{-3}$ mbar)
- Brazed fittings for high vacuum duty
- Low pressure drop
- Pressure drop graphs available upon request
- Seamless drawn housings
- Temp (continuous): min -15 F (-26 C) max 220 F (104 C)

OPTIONS

- Activated carbon prefilter to reduce odor
- Alternate Top-to-canister fastening system for low pressure or pulsating systems
- Available in *Stainless Steel*
- Epoxy coated housings
- Extra tap fittings for vacuum gauge
- Larger sizes available
- Special connections
- Support brackets
- Vacuum gauge available
- Various elements available

Line Drawing

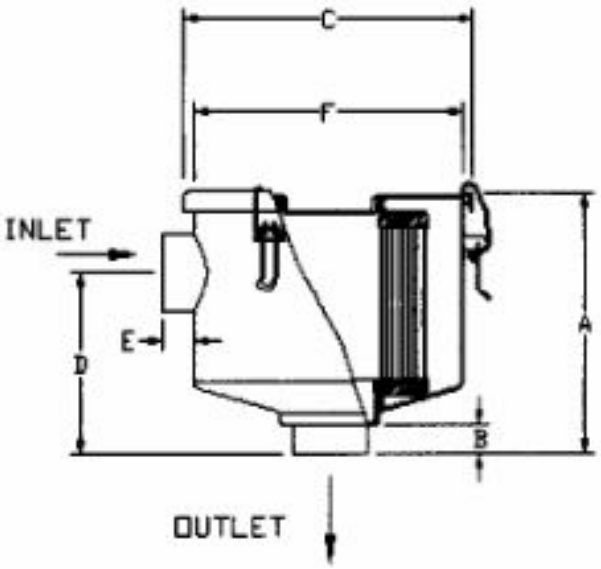

***All measurements are shown in standards.**

Typical Lead Times:
- 1 - 2 weeks
- 3 - 4 weeks
- Normally in stock
- 5 - 7 weeks
- 8 + weeks

Add To Order	Model Number	Element Type	Inlet in. NPT or FLG	Outlet in. NPT or FLG	Connection Style	Dim A in.	Dim B in.	Dim C in.	Dim D in.	Dim E in.	Dim F in.	Dim G in.	Parent Flow SCFM	Element Parent Flow SCFM	Approx. Weight lbs.	CAD
	CSL-825-038HC	Polyester	0.375	0.375	FPT	3.63	0.56	3.66	1.88	0.56	3.5	3	18	25	0.88	CAD
	CSL-825-050HC	Polyester	0.5	0.5	FPT	3.63	0.56	3.66	1.88	0.56	3.5	3	18	25	0.88	CAD
	CSL-843-050HC	Polyester	0.5	0.5	FPT	4.38	0.56	5.88	2.5	0.56	5	3.25	20	55	3	CAD
	CSL-825-075HC	Polyester	0.75	0.75	FPT	3.75	0.56	3.66	1.88	0.56	3.5	3	24	25	0.88	CAD
	CSL-843-075HC	Polyester	0.75	0.75	FPT	4.38	0.56	5.88	2.5	0.56	5	3.25	25	55	3	CAD
	CSL-843-100HC	Polyester	1	1	FPT	4.38	0.75	5.88	2.62	0.75	5	3.25	35	55	3	CAD
	CSL-849-100HC	Polyester	1	1	FPT	6.75	0.75	7.33	4.5	0.75	6.8	5.25	40	115	5	CAD
	CSL-843-125HC	Polyester	1.25	1.25	FPT	4.38	0.75	5.88	2.62	0.75	5	3.25	55	55	3	CAD
	CSL-849-125HC	Polyester	1.25	1.25	FPT	6.75	0.75	7.33	4.5	0.75	6.8	5.25	60	115	5	CAD
	CSL-849-150HC	Polyester	1.5	1.5	FPT	6.75	0.75	7.33	4.5	0.75	6.8	5.25	80	115	5	CAD
	CSL-851-200HC	Polyester	2	2	FPT	10.25	0.75	8.75	5	0.75	7.62	9.25	175	290	15	CAD
	CSL-851-250HC	Polyester	2.5	2.5	FPT	10.5	1.25	8.75	5.5	1.25	7.62	9.25	210	290	15	CAD
	CSL-239-300C	Polyester	3	3	FPT	15.75	2.88	13.25	8.75	2.88	12	11	300	750	33	CAD
	CSL-824-038HC	Paper	0.375	0.375	FPT	3.63	0.56	3.66	1.88	0.56	3.5	3	18	25	0.88	CAD
	CSL-824-050HC	Paper	0.5	0.5	FPT	3.63	0.56	3.66	1.88	0.56	3.5	3	18	25	0.88	CAD
	CSL-842-050HC	Paper	0.5	0.5	FPT	4.38	0.56	5.88	2.5	0.56	5	3.25	20	55	3	CAD
	CSL-824-075HC	Paper	0.75	0.75	FPT	3.75	0.56	3.66	1.88	0.56	3.5	3	24	25	0.88	CAD
	CSL-842-075HC	Paper	0.75	0.75	FPT	4.38	0.56	5.88	2.5	0.56	5	3.25	25	55	3	CAD
	CSL-842-100HC	Paper	1	1	FPT	4.38	0.75	5.88	2.62	0.75	5	3.25	35	55	3	CAD
	CSL-848-100HC	Paper	1	1	FPT	6.75	0.75	7.33	4.5	0.75	6.8	5.25	40	115	5	CAD
	CSL-842-125HC	Paper	1.25	1.25	FPT	4.38	0.75	5.88	2.62	0.75	5	3.25	55	55	3	CAD
	CSL-848-125HC	Paper	1.25	1.25	FPT	6.75	0.75	7.33	4.5	0.75	6.8	5.25	60	115	5	CAD
	CSL-848-150HC	Paper	1.5	1.5	FPT	6.75	0.75	7.33	4.5	0.75	6.8	5.25	80	115	5	CAD
	CSL-850-200HC	Paper	2	2	FPT	10.25	0.75	8.75	5	0.75	7.62	9.25	175	290	15	CAD
	CSL-850-250HC	Paper	2.5	2.5	FPT	10.5	1.25	8.75	5.5	1.25	7.62	9.25	210	290	15	CAD

F-450 Dimensional

Blue-White® Ind.

F-450

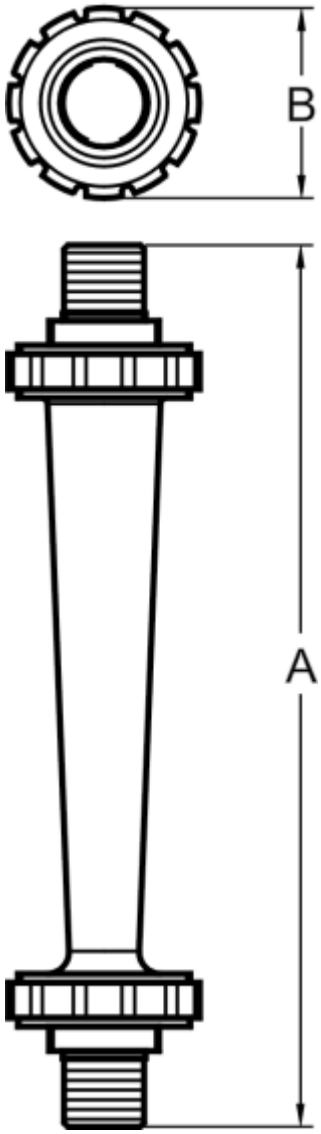

F-450 Series In-Line English System		
Model No.	**A**	**B**
F-45330	8-7/8"	1-7/8"
F-45375	8-7/8"	1-7/8"
F-45376	8-7/8"	1-7/8"
F-45500	8-7/8"	1-7/8"
F-45750	10"	1-7/8"

F-450 Series In-Line Metric System		
Model No.	**A**	**B**
F-45330	225.4mm	47.6mm
F-45375	225.4mm	47.6mm
F-45376	225.4mm	47.6mm
F-45500	225.4mm	47.6mm
F-45750	254.0mm	47.6mm

© 2003 Blue-White Industries

See About Us for additional company information.
phone: 714-893-8529 | fax: 714-894-9492
Contact us (e-mail): Sales | Tech Support | Webmaster

Trademarks used on this site

F-450B

Model Number: F-45375LHB-8
Meter Type: Variable Area
Pipe Size: 1/2"
Pipe Type:
Thread Type: Male NPT
Calibration: Water
Scale: Permanent silk screen (Dual scale)
Description: Standard flow range
Notes: Injection molded, chemical resistant Polysulfone. In-line adapters.
Non-Adjustable (standard) or Adjustable: Standard
Float Material: #316 SS
Body Material: Polysulfone natural
Adapter Material: Brass
O-ring Material: Viton
Union Material: Polysulfone
Mounting: In-line
Accuracy: ±5%
Clear Hole:
Temperature: 212 Deg F/100 Deg C @ 0 pressure
Pressure: 150 psig/10.3 Bar @ 70 Deg F/21 Deg C
Max Pressure Drop: 2 psi
Calibration Units: GPM, LPM
Flow Range:

GPM: 0.1 - 1
LPM: 0.4 - 4
SCFM: -

© 2003 Blue-White Industries
See About Us for additional company information.
phone: 714-893-8529 | fax: 714-894-9492
Contact us (e-mail): Sales | Tech Support | Webmaster

Trademarks used on this site

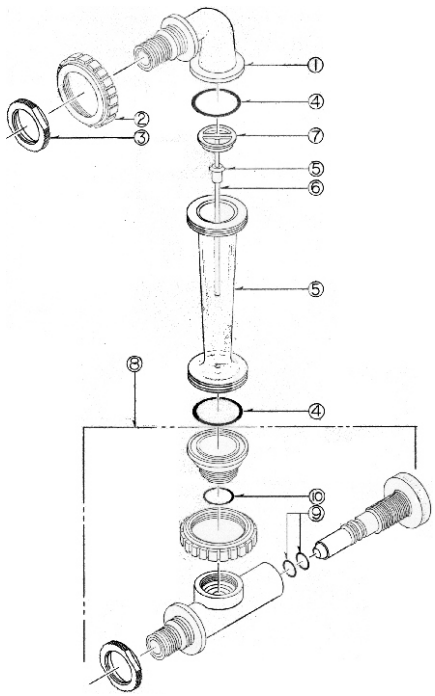

BLUE-WHITE INDUSTRIES LIMITED WARRANTY

FLOWMETERS are warranted to be free of defects in material and workmanship for up to 12 months from the date of factory shipment. Warranty coverage is limited to repair or replacement of the defective flowmeter only. Blue-White Industries does not assume responsibility for any other damage that may occur.

This warranty does not cover damage to the flowmeter that results from misuse or alterations, nor damage that occurs as a result of: meter misalignment, improper installation, over tightening, use of non- recommended chemicals, use of non-reccomended adhesives or pipe dopes, excessive heat or pressure, or allowing the meter to support the weight of related piping. Flowmeters are tested and calibrated with water and air only. Although meters may be suitable for other chemicals, Blue-White cannot guarantee their suitability.

Flowmeters are repaired at the factory only. Call or write the factory to receive a Return Authorization Number, carefully pack the flowmeter to be returned, including a brief description of the problem. Note the RA number on the outside of the carton.

Website: www.Blue-White.com
E-mail: Sales@Blue-White.com | Techsupport@Blue-White.com
Phone: 714-893-8529 | Fax: 714-894-9492

Blue-White® Industries, Ltd.

5300 Business Drive
Huntington Beach, CA 92649

Installation Instructions
F-450

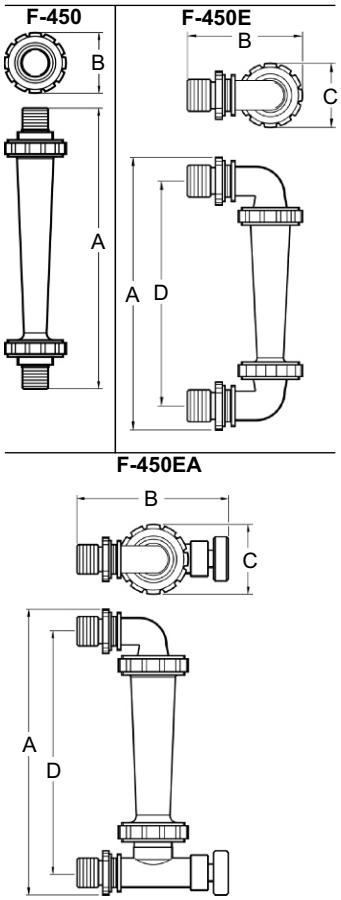

Model No.	Dim A	Dim B	Dim C	Dim D
F-45330	8-7/8" 225.5mm	1-7/8" 47.6mm	NA	NA
F-45375	8-7/8" 225.5mm	1-7/8" 47.6mm	NA	NA
F-45376	8-7/8" 225.5mm	1-7/8" 47.6mm	NA	NA
F-45500	8-7/8" 225.5mm	1-7/8" 47.6mm	NA	NA
F-45750	10" 254mm	1-7/8" 47.6mm	NA	NA
F-45330E	9-7/8" 250.8mm	3-1/8" 79.4mm	1-7/8" 47.6mm	8-9/16" 217.5mm
F-45375E	9-7/8" 250.8mm	3-1/8" 79.4mm	1-7/8" 47.6mm	8-9/16" 217.5mm
F-45376E	9-7/8" 250.8mm	3-1/8" 79.4mm	1-7/8" 47.6mm	8-9/16" 217.5mm
F-45500E	9-7/8" 250.8mm	3-1/8" 79.4mm	1-7/8" 47.6mm	8-9/16" 217.5mm
F-45750E	10" 254mm	3-1/8" 79.4mm	1-7/8" 47.6mm	9" 228.6mm
F-45330EA	9-7/8" 250.8mm	4" 101.6mm	1-7/8" 47.6mm	8-9/16" 217.5mm
F-45375EA	9-7/8" 250.8mm	4" 101.6mm	1-7/8" 47.6mm	8-9/16" 217.5mm
F-45376EA	9-7/8" 250.8mm	4" 101.6mm	1-7/8" 47.6mm	8-9/16" 217.5mm
F-45500EA	9-7/8" 250.8mm	4" 101.6mm	1-7/8" 47.6mm	8-9/16" 217.5mm
F-45750EA	10" 254mm	4" 101.6mm	1-7/8" 47.6mm	9-1/8" 231.8mm

Meter Body: Polysulfone
Float: 316SS, Hastelloy C-276, PVC, or Teflon (based on model)
Guide rod: # 316 Stainless (opt. Hastelloy C-276)
Adapters: Polysulfone
O-Rings: Viton
Scale: Permanent, dual scale silkscreen (black ink)
Max. PSIg: 150 PSIG / 10.3 BAR at 70°F/21°C
Max. Temp: 212°F / 100°C at 0 pressure
Accuracy: ± 5% of full scale reading

Your Blue-White® F-450 Series

- Your Blue-White® flowmeter was designed to be easy to install.
- Please read the Instruction Guideline on the next page before installing your flowmeter.
- This flowmeter is an instrument, special care should be taken when handling and installing.

Inspection of the Flowmeter and Compatibility

- Carefully inspect the meter for any damage that may have occurred during shipping.
- Remove the plastic tubing that has been inserted during packaging for shipping reasons.
- Make sure your pressure, temperature, fluid and other requirements are compatible with the meter before installation.
- The maximum temperature capability decreases as the pressure increases. The max PSI decreases as the temperature increases. See the chart on the following page.
- Although the meter may be suitable for other chemicals, Blue-White® meters are tested with water. If you are unsure of the meters compatibility with your chemical, please consult the factory.
- **Blue-White® warranties the flowmeter for use with air and water only.**

Blue-White® Industries, Ltd.

Installation Guideline

Caution: Follow these instructions to avoid failure.

Danger: Wear eye protection when installing or removing flowmeter.

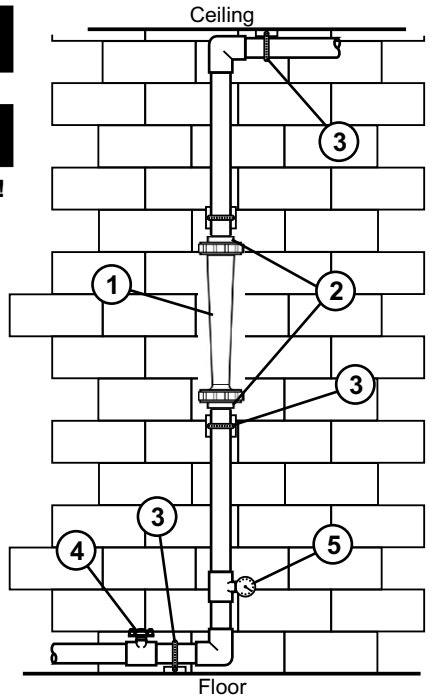

1. Misalignment will damage the meter!

Flowmeter must be installed in an exact vertical plane to ensure accuracy. Be certain of proper plumbing alignments. Misalignment may cause the o-ring seals to leak. The meterbody material can be damaged by UV rays. **Do not install in direct sunlight.**

2. Pipe dope and glue will damage the meter!

Use only Teflon® tape on the threaded adapters. Polysulfone meter body and fittings cannot tolerate PVC Glue and/or pipe dope. Even fumes can cause severe damage. If you are installing your flowmeter to a glued pipe configuration, install the flowmeter *after* all glued fittings are dried and lines are purged of all fumes. **Never** hold the meter body with pliers or like tools. Union nuts should be hand tightened only. **DO NOT OVER-TIGHTEN!**

3. Vibration and heavy loads will damage the meter!

Wall, floor and ceiling mounts and supports must be carefully aligned with the meter body and sturdy enough to support the plumbing and prevent vibration. Never allow the flowmeter to support the weight of related piping.

4. Solenoid valves will damage the meter!

Avoid a system that will impose a sudden burst of flow to the meter. Such a burst will cause the float to impact the float stop with destructive force. Solenoid valves, or other quick opening valves cannot be used unless meter is protected against sudden bursts of flow.

5. High pressures and temperatures will damage the meter!

The maximum acceptable temperature and pressure is interdependent. The maximum acceptable working pressure is dependant on the actual fluid temperature. The maximum acceptable fluid temperature is dependant on the actual working pressure. (see Temperature Vs. Pressure chart).

Temperature vs. Pressure

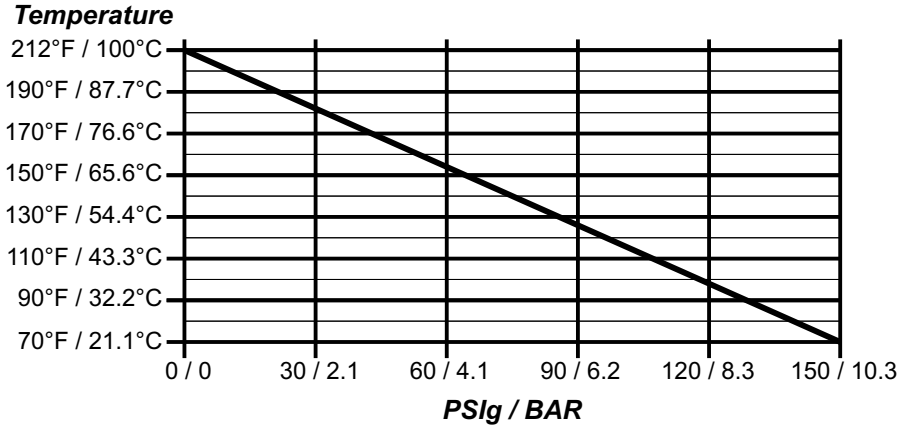

Pressure and Temperature

Pressure and temperature limits are inversely proportional. At the maximum suggested pressure the temperature should approach 70°F / 21.1°C; at the maximum suggested temperature the pressure should approach zero psi. We cannot guarantee our flowmeters will not be damaged either at or below the suggested limits simply because of many factors which influence meter integrity; stress resulting from meter misalignment, damage due to excessive vibration and/or deterioration caused by contact with certain chemicals as well as direct sunlight. These situations and others tend to reduce the strength of the materials from which the meters are manufactured.

Application Note

Flowmeters are tested and calibrated for water or air only.

Although meters may be suitable for other chemicals, Blue-White cannot guarantee their suitability. It is the responsibility of the user to determine the suitability of the flowmeter in their application.

Maintenance

The “Exploded View” drawing illustrates assembly of the F-450 series meter. If your flowmeter needs to be cleaned refer to this drawing when reassembling the unit. The tapered tube may be cleaned with a soft bottle brush. Use a MILD soap and water solution for cleaning purposes. Hard water deposits can be removed with a 5% acetic acid solution (vinegar). Note the floats “up” position.

Blue-White®
Industries, Ltd.

Series 300 Electric Actuators

ACTUATORS & CONTROLS

THE ELECTRIC SOLUTION

NIBCO Series 300, quality, line of electric actuators are designed for quarter-turn applications — ball, butterfly and plug valves; dampers; vents and similar uses. NIBCO Actuators are manufactured in a wide range of output torque and operating speeds to fit your specific requirements.

The 300 Series actuators offer compactness and a rugged design with manual override capability.

OPTIONAL FEATURES

- Electromechanical brake for 15 and 30 second cycle units
- 1K ohm potentionmeter
- Electronic proportional control, 4-20mA, 1-5 VDC or 0-10 VDC
- Optional voltages include 230 VAC and 24 VDC
- Four additional auxiliary switches

STANDARD FEATURES

- Heater and thermostat installed in all NE300 units
- Permanently lubricated steel gear train
- Hardened steel drive shaft
- Operating temperatures from -40°F to +140°F
- Single phase capacitor run motor with thermal overload protection.
- Motor brake standard on 4 and 10 second cycle units
- Enclosures CSA certified to NEMA-4, 4X and 7
- Female ISO 5211 mount and drive
- Declutchabale manual override
- Two 1/2" NPT conduit entrances

SERIES 300

TORQUE		SPEED 90°	MODEL	LOCKED ROTOR AMP				MOTOR DUTY CYCLE	
IN/IB	NM			115VAC	230VAC	12VDC	24VDC	AC	DC
150	17	4 SEC	300-4	0.57	0.29	1.2A	2.5A	30%	100%
300	34	10 SEC	300-10	0.57	0.29	1.2A	2.5A	30%	100%
400	45	15 SEC	300-15	0.56	0.25	1.2A	2.5A	30%	100%
600	68	30 SEC	300-30	0.56	0.25	1.2A	2.5A	30%	100%

NIBCO INC.
WORLD HEADQUARTERS
WEB: www.nibco.com

1516 MIDDLEBURY STREET
ELKHART, IN 46516-4740
USA

DOMESTIC CUSTOMER SERVICE
PHONE: 800.234.0227
FAX: 800.234.0557

TECHNICAL SERVICE
PHONE: 888.446.4226
FAX: 888.336.4226

INTERNATIONAL OFFICE
PHONE: +1/574.295.3221
FAX: +1/574.295.3455

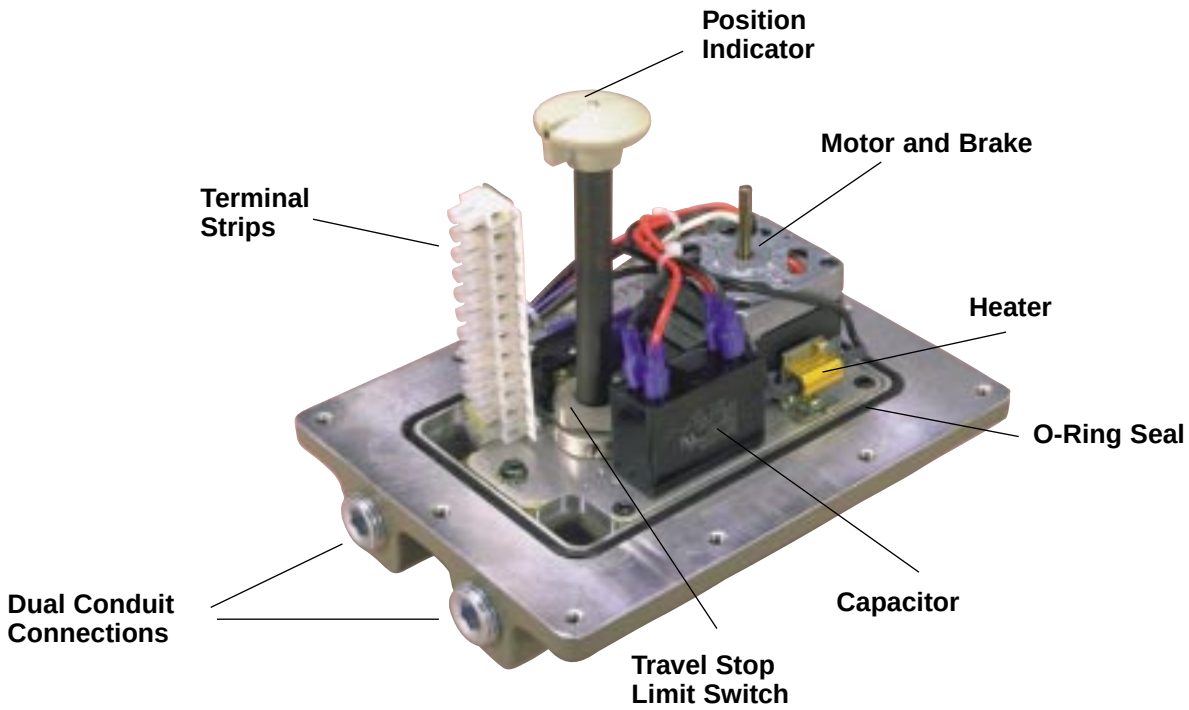

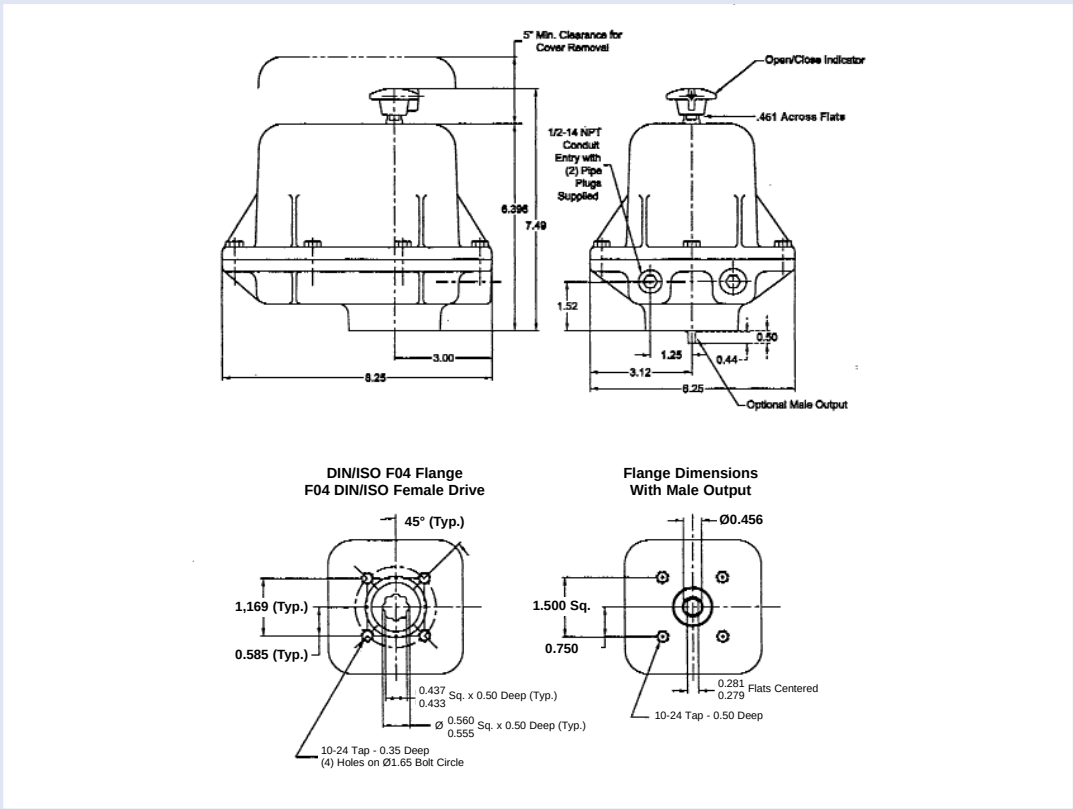

NIBCO
AHEAD OF THE FLOW™

NIBCO INC.	1516 MIDDLEBURY STREET	DOMESTIC CUSTOMER SERVICE	TECHNICAL SERVICE	INTERNATIONAL OFFICE
WORLD HEADQUARTERS	ELKHART, IN 46516-4740	PHONE: 800.234.0227	PHONE: 888.446.4226	PHONE: +1/574.295.3221
WEB: www.nibco.com	USA	FAX: 800.234.0557	FAX: 888.336.4226	FAX: +1/574.295.3455

300-0400 © Copyright 2000, NIBCO INC.

Printed in the USA

CS & CL Electric Actuators

Conbraco's CS and CL electric actuators are split phase reversing AC and DC motors. Eight sizes are available which produce breakaway torques between 150 lbs. ins. and 3000 lbs. ins. They are excellent industrial quality units capable of on/off, fail safe, and modulating applications.The efficient spur gear drive train is supported by needle bearings which make it very secure while eliminating the potential for side loading of the output shaft.

Conbraco offers as standard a 75% AC extended duty cycle motor. 100% DC motors are also readily available. All units are rated for use in ambient temperatures of -40°F (with heater & thermostat) to 150°F max. Choose from standard NEMA 4 enclosures and combination NEMA 4, 4x, 7 and 9 enclosures with CSA approvals. Units are also available with CE approvals and some UL listings (consult factory).

Other standard features include:

- Locked rotor protection
- Dual conduits
- Position indicators
- Composite PVC plastic covers on CL Series NEMA 4/4X only
- Captive cover bolts on CS Series
- Declutchable overrides or with optional handwheel manual overrides

Three New Boards to Simplify Inventory, Set-up and Calibration
All "Standard" actuators will have the new boards installed. Features of the new Motor Boards include:

- Plug-in connectors for the motor, the brake option, the heater/thermostat option and the new Control Board - field upgrades are easier than ever.
- All connectors are coded to prevent mis-wiring.
- Limit switch wires are soldered to the board - no more loose connections.
- A six position terminal strip clearly labeled so it can be wired up in the field without an instruction manual.

Introducing Simplicity for Calibrating Modulating Actuators
The new Control Board brings a whole new level of simplicity to the field. It will work with either of the Motor Boards (115VAC or 230VAC). Features include:

- Switch selector for 4-20mA or 0-10VDC input
- Switch selector for 4-20mA or 0-10VDC position readback
- Switch selector for either "fail in-place" or "fail to zero" upon loss of control signal (provided input power remains)
- On-board push buttons to manually position the actuator
- An adjustable pot for Speed Control (motor pulsing)
- An adjustable pot for deadband adjustment
- A "Mode Selector" switch with LEDs, which are used for:
  - "No tools" pot calibration
  - Setting Zero and Span
  - Manually positioning the actuator
- Locked Rotor Protection if the actuator cannot achieve the position commanded by the control signal, it will cut power to the motor. Repeated stalls will not damage the actuator.
- Reverse acting operation with no rewiring.
- Split range operation with no rewiring.

Limit Switches and Feedback Pots with Flying Leads
These options are now provided without terminal strips. Instead, they have "flying leads" to which the user may wire directly. If users require internal terminal block connections, you can order either of the two new Terminal Block Kits (6 position or 12 position, depending upon how many wires you need to connect).

Speed Control with a Positioner?
Yes. It is a standard feature of the new Control Board. Simply adjust a pot (a little dial on the board) to slow the actuator to up to six times its normal cycle time.

The new "MSB series"
Totally mechanical failsafe arrangement with true spring return back up power. Contact factory for complete details and ordering information.

CS Dimensions

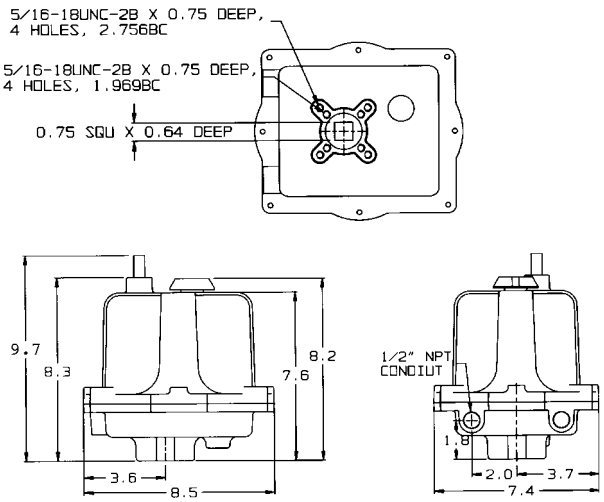

CL Dimensions

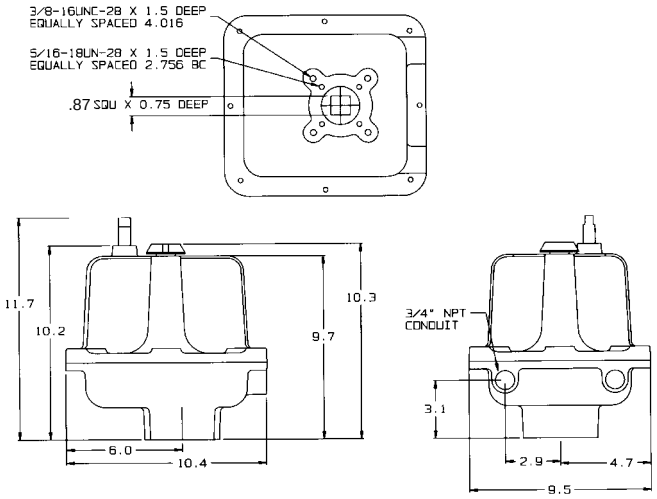

CS & CL Specifications and Options

TECHNICAL DATA—115VAC AND 230VAC Models*

Torque Output (breakaway)	Speed (seconds per 90˚) rotation)	Duty Cycle	VA Rating		Max Running Current at Full Load (True RMS)		Max Effective Peak Inrush Current (=.66 x peak inrush)	
			115VAC	230VAC	115VAC	230VAC	115VAC	230VAC
150 in lb	8	75%	70vA	115vA	.6 amps	.5 amps	1.25 amps	.924 amps
300 in lb	15	75%	70vA	115vA	.6 amps	.5 amps	1.25 amps	.924 amps
600 in lb	30	75%	70vA	115vA	.6 amps	.5 amps	1.25 amps	.924 amps
1000 in lb	25	75%	92vA	161vA	.8 amps	.7 amps	1.66 amps	1.29 amps
1500 in lb	40	75%	92vA	161vA	.8 amps	.7 amps	1.66 amps	1.29 amps
2000 in lb	55	75%	92vA	161vA	.8 amps	.7 amps	1.66 amps	1.29 amps
2500 in lb	70	75%	92vA	161vA	.8 amps	.7 amps	1.66 amps	1.29 amps
3000 in lb	75	75%	92vA	161vA	.8 amps	.7 amps	1.66 amps	1.29 amps

TECHNICAL DATA—12VDC & 24VDC Models*

Torque Output (breakaway)	Speed (seconds per 90˚ rotation)		Duty Cycle	Current Draw at full running	
	12VDC	24VDC		12VDC	24VDC
150 in lb	5	3	Continuous	1.9 amps	2.4 amps
300 in lb	10	5	Continuous	1.9 amps	2.4 amps
600 in lb	15	8	Continuous	1.9 amps	2.4 amps
1000 in lb	15	15	Continuous	3.5 amps	3.5 amps
1500 in lb	20	20	Continuous	3.5 amps	3.5 amps
2000 in lb	25	25	Continuous	4.8 amps	4.8 amps
2500 in lb	30	30	Continuous	4.8 amps	4.8 amps
3000 in lb	30	30	Continuous	4.8 amps	4.8 amps

*Notes:
1. The Current Draws stated above include all options. If the brake and/or heater & thermostat are not installed, the actual current draws will be less.
2. For DC models, Current Draws are provided at full running torque. If the actuator encounters an overtorque condition, such as a stall condition, the Current Draw will be vastly increased.
3. DC actuators have motors that do not generate excessive heat, so they are not limited by duty cycle restraints. However, due to limited brush life of the motors, Conbraco does not recommend using them in applications that require constant (24 hours per day/7 days per week) cycling. All DC voltage models provide 100% duty cycle for 1 hour after which DC motor is reduced to 80% duty cycle.

ACTUATOR MODEL#'s/DESCRIPTION

230 VAC . . . . . 230 VAC MOTOR
24 VAC . . . . . 24 VAC MOTOR
12/24 VDC . . . . . 12 OR 24 VDC MOTOR
X . . . . . NEMA 7
W . . . . . NEMA 4 (WEATHER PROOF)
E. . . . . EXTENDED DUTY CYCLE (APOLLO® STD)
S1 . . . . . ONE AUXILIARY SWITCH SPDT
S2 . . . . . TWO AUXILIARY SWITCHES SPDT
T. . . . . HEATER AND THERMOSTAT
K . . . . . MOTOR BRAKE
Z. . . . . DECLUTCHABLE HANDWHEEL OVERRIDE

CONTROL OPTIONS*

R . . . . . SINGLE RELAY 2 WIRE CONTROL
C . . . . . POSITIONER (SPECIFY SIGNAL)
CL2 . . . . . POSITIONER WITH FAIL SAFE BACKUP FOR CS SERIES
CL3 . . . . . POSITIONER WITH FAIL SAFE BACKUP FOR CL SERIES
L2 . . . . . FAIL SAFE BATTERY BACKUP FOR CS SERIES
L3 . . . . . FAIL SAFE BATTERY BACKUP FOR CL SERIES
A . . . . . TIMER, SELECTABLE ON AND OFF TIMES
B . . . . . ROTATION CYCLE RATE REGULATOR

NOTE: NO MANUAL OVERRIDE ON FAILSAFE UNITS
*CONTACT ACTUATOR ENGINEERING FOR APPLICATIONS NOT COVERED BY INDICATED OPTIONS
*OPTION AVAILABILITY AND PRICES ARE SUBJECT TO CHANGE WITHOUT NOTICE

How To Order Examples

ACTUATOR MODEL	TORQUE	ENCLOSURE	OPTIONS	DUTY CYCLE	VOLTAGE
CS XXX	600	W-NEMA IV	C (POSITIONER)	E-EXTENDED	115VAC
CL XXX	2500	W-NEMA IV	S2 (TWO SWITCHES)	E-EXTENDED	230 VAC

Bronze Ball Valves

Dezincification Resistant

Two-Piece Body • Full Port • 316SS Trim • Blowout-Proof Stem • ISO Direct-Mount Pad for Actuation • Vented Ball

600 PSI/41.4 Bar Non-Shock Cold Working Pressure
150 PSI/10.3 Bar Saturated Steam◆

CONFORMS TO MSS SP-110 •
ACTUATOR MOUNT PER ISO 5211

TM-585-70-66
Threaded
with Mounting Pads

MATERIAL LIST

PART	SPECIFICATION
1. Stem	Stainless Steel ASTM A 276 Type 316
2. O-Ring (2)	Fluoroelastomer
3. Thrust Washer	Reinforced TFE
4. Seat Ring (2)	Carbon Filled TFE
5. Ball (Vented)	Stainless Steel ASTM A 276 Type 316 or ASTM A 351 Type CF8M
6. Body	Bronze ASTM B 584 Alloy C84400
7. Body End Piece	Bronze ASTM B 584 Alloy C84400

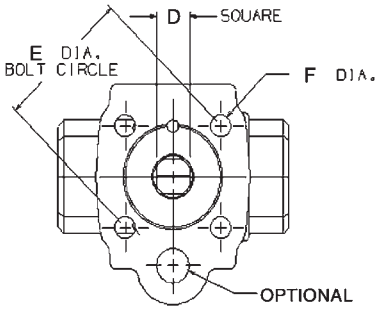

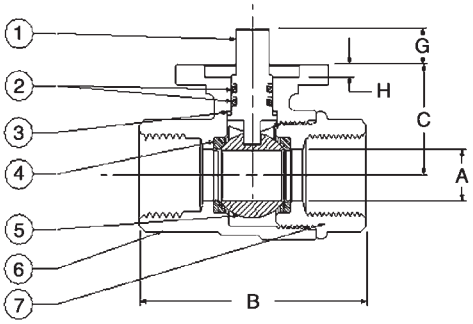

TM-585-70-66
NPT x NPT

DIMENSIONS—WEIGHTS—QUANTITIES

Size		Flange	Dimensions																		Master
			A		B		C		D		E		F		G		H		TM-585-70-66		
In.	mm.	Size	In.	mm.	In.	mm.	In.	mm.	In.	mm.	In.	mm.	In.	mm.	In.	mm.	In.	mm.	Lbs.	Kg.	Ctn. Qty.
½	15	F03	.50	13	2.43	62	1.10	28	.35	9	1.42	36	.22	5.6	.39	10	.12	3	.82	.37	50
¾	20	F03	.75	19	2.94	75	1.37	35	.35	9	1.42	36	.22	5.6	.39	10	.12	3	1.23	.56	25
1	25	F04	1.00	25	3.33	85	1.56	40	.43	11	1.65	42	.22	5.6	.47	12	.12	3	1.88	.85	20
1 ¼	32	F04	1.25	32	4.19	106	2.04	52	.43	11	1.65	42	.22	5.6	.47	12	.16	4	3.06	1.39	10
1 ½	40	F04	1.50	38	4.70	119	2.27	58	.43	11	1.65	42	.22	5.6	.47	12	.16	4	4.45	2.02	10
2	50	F05	2.00	51	5.15	131	2.50	64	.55	14	1.97	50	.27	6.8	.63	16	.16	4	6.85	3.11	6
†2 ½	65	F05	2.00	51	5.84	148	2.50	64	.55	14	1.97	50	.27	6.8	.63	16	.16	4	9.00	4.06	1

† NIBCO Supplies TM-580-70-66 Conventional Port Valves.

◆ For detailed Operating Pressure, refer to Pressure Temperature Chart on page 48.

NIBCO INC. WORLD HEADQUARTERS • 1516 MIDDLEBURY ST. • ELKHART, IN 46516-4740 • USA • PH: 1.800.234.0227
TECH SERVICES PH: 1.888.446.4226 • FAX: 1.888.336.4226 • INTERNATIONAL OFFICE PH: +1.574.295.3221 • FAX: +1.574.295.3455
www.nibco.com

Brass Safety Exhaust Ball Valves

No. 6GD06

Exhaust port bleeds down compressed air between valve and machine. Valves have lockout handle and 10-32 threaded exhaust port. Lockable handle accommodates 9/32" lock shackles when valve is in closed position only. Two-piece body with blowoutproof stem. Teflon ball seats and teflon stem seals. Complies with OSHA requirement 1910.147. Rated for 200 psi.

Inlet/Outlet NPT Size (In.)	Thread Style	Temperature Rating (°F)	Stock No.	Each	Shpg. Wt.
1/4	Female x Female	-40 to 350	6GD06	$7.13	0.3
3/8	Female x Female	-40 to 350	6GD07	7.13	0.2
1/2	Female x Female	-40 to 350	6GD08	7.13	0.5
3/4	Female x Female	-40 to 350	6GD09	10.27	0.8
1	Female x Female	-40 to 350	6GD10	13.06	1.2

Forged Brass Ball Valves

No. 6GD11

Industrial valves are precision machined. Blowoutproof stem. Chrome plated brass ball. Teflon ball seats and stem seal except Nos. 6GD18 and 6GD19 which have viton stem seals. Vacuum rated to 29.9" HG. Full port. 600 psi (CWP), 150 psi (steam). 2½ and 3" valves are for 450 psi and are not UL or CSA rated.

- UL listed for LP gas
- CSA approved to 1/2 rated psi for natural gas

Inlet/Outlet NPT Size (In.)	Thread Style	Temperature Rating (°F)	Stock No.	Each	Shpg. Wt.
1/4	Female x Female	-40 to 350	6GD11	$4.96	0.3
3/8	Female x Female	-40 to 350	6GD13	4.97	0.3
1/2	Female x Female	-40 to 350	6GD14	5.12	0.5
3/4	Female x Female	-40 to 350	6GD15	6.74	0.7
1	Female x Female	-40 to 350	6GD16	9.98	1.0
1¼	Female x Female	-40 to 350	6GD17	17.21	1.7
1½	Female x Female	-40 to 350	6GD18	21.71	2.3
2	Female x Female	-40 to 350	6GD19	33.00	3.5
2½	Female x Female	-40 to 350	6GD20	106.40	8.0
3	Female x Female	-40 to 350	6GD12	155.50	5.4
1/4	Male x Female	-40 to 350	6GD21	7.04	0.3
3/8	Male x Female	-40 to 350	6GD22	7.04	0.3
1/2	Male x Female	-40 to 350	6GD23	6.99	0.5
3/4	Male x Female	-40 to 350	6GD24	8.18	0.8
1	Male x Female	-40 to 350	6GD25	13.39	1.1

Working second or third shift?

Order online anytime at grainger.com

It's your ultimate 24-hour **supply line.**

- Look up and order over 300,000 products
- Know what's available at the time of your order
- Get your own account-specific pricing

Registration is easy – go online today!

Brass Mini Ball Valves

No. 6GD44

These valves provide space savings for installation in tight areas. Ideal for use on small air and liquid control systems. Rated 450 psi (CWP) with Teflon ball seats and viton sealed stem. Full ports on 1/8 and 1/4"; standard ports on 3/8 and 1/2".

Inlet/Outlet NPT Size (In.)	Thread Style	Temperature Rating (°F)	Stock No.	Each	Shpg. Wt.
1/8	Female x Female	-4 to 250	6GD44	$3.72	0.2
1/4	Female x Female	-4 to 250	6GD45	3.72	0.2
1/4	Male x Female	-4 to 250	6GD48	3.72	0.2
3/8	Female x Female	-4 to 250	6GD46	3.72	0.2
3/8	Male x Female	-4 to 250	6GD49	3.72	0.2
1/2	Female x Female	-4 to 250	6GD47	4.15	0.4
1/2	Male x Female	-4 to 250	6GD50	4.15	0.3

Carbon Steel Ball Valves

No. 6GD36

Valves are ideal for use in abrasive air or liquid applications. 316 stainless steel ball and corrosion-resistant 304 stainless steel handle. Carbon reinforced Teflon seats and blowoutproof Teflon stems. 125 psi working steam pressure. Conforms to API 598 specifications.

Uses: For hydraulic use up to 2000 psi for sizes 1/4 to 1" and 1500 psi for sizes 1¼ to 2".

Inlet/Outlet NPT Size (In.)	Thread Style	Temperature Rating (°F)	Stock No.	Each	Shpg. Wt.
1/4	Female x Female	-20 to 425	6GD36	$11.14	0.6
3/8	Female x Female	-20 to 425	6GD37	10.93	0.6
1/2	Female x Female	-20 to 425	6GD38	11.71	0.6
3/4	Female x Female	-20 to 425	6GD39	13.49	1.0
1	Female x Female	-20 to 425	6GD40	18.08	1.3
1¼	Female x Female	-20 to 425	6GD41	27.65	2.2
1½	Female x Female	-20 to 425	6GD42	38.15	3.4
2	Female x Female	-20 to 425	6GD43	49.60	4.9

Stainless Steel Ball Valves

No. 6GD29

Industrial two-piece valves are suitable for use in most corrosive environments compatible with 316 stainless steel. Bottom loaded stem resists blowout. Full port design with carbon reinforced Teflon seat and Teflon stem-seals. 304 stainless steel handle and handle nut. Rated at 2000 psi for sizes 1/4 to 1" and 1500 psi for sizes 1¼ to 2". 150 psi working steam pressure. Conforms to API 598 specifications.

Uses: For air, gas, water, oil, and other liquids.

Inlet/Outlet NPT Size (In.)	Thread Style	Temperature Rating (°F)	Stock No.	Each	Shpg. Wt.
1/4	Female x Female	-60 to 450	6GD29	$25.40	0.6
1/2	Female x Female	-60 to 450	6GD30	25.40	0.8
3/4	Female x Female	-60 to 450	6GD31	41.75	1.2
1	Female x Female	-60 to 450	6GD32	51.35	2.1
1¼	Female x Female	-60 to 450	6GD33	97.80	0.9
1½	Female x Female	-60 to 450	6GD34	102.15	4.3
2	Female x Female	-60 to 450	6GD35	131.50	6.6

Where's your nearest branch?
See pages A3–A8 for branch listings.

Parker

No. 4A788

No. 4A791

Flow Control Air Valves

Two-stage needle provides fine adjustment over the first turns, and nominal adjustments over the last turns. Valve construction features a brass body with stainless steel needle and internal stainless steel poppet-style check valve.

Uses: For pneumatic systems to control actuator speed by acting as a restriction.

- Set screw secures selected needle position
- Knurled adjustment knob
- Rated for 2000 psi max. (non-shock)

NPT Thread (In.)	Cv*	Parker Model	Stock No.	Each	Shpg. Wt.
1/8	0.31	PF 200B	4A788	$16.46	0.3
1/4	0.78	PF 400B	4A789	21.71	0.5
3/8	1.23	PF 600B	4A790	28.45	0.8
1/2	1.85	PF 800B	4A791	40.15	1.5

(*) Coefficient of volume: The amount of water in GPM at standard conditions, which will pass through the valve at full open with a 1 psi pressure drop.

Dayton®

No. 1A326

Pneumatic Exhaust Mufflers

Speedaire muffler-filters reduce exhaust noise levels to acceptable OSHA requirements. Mufflers diffuse air and noise from exhaust ports of valves, cylinders, and air tools. Constructed of 40 microns porous sintered bronze element directly bonded to nickel plated steel pipe thread fitting. 300 psi max. pressure.

NPT Size (In.)	Length (In.)	Hex. (In.)	Stock No.	Each	Shpg. Wt.
1/8	1⅛	7/16	1A325	$1.87	0.1
1/4	1⅜	9/16	1A326	2.08	0.1
3/8	1½	11/16	1A327	2.82	0.1
1/2	1⅞	7/8	1A328	4.00	0.1
3/4	2¼	1 1/16	6F600	5.66	0.2
1	2⅞	1 5/16	6F601	8.21	0.4

ARO®

No. 4ZJ85

Exhaust Port Flow Control

Controls air cylinder speed and fits into exhaust port of valves. Adjustable orifice of port flow control throttles valve exhaust and develops back pressure that acts to reduce speed of air cylinder stroke. Solid, single-piece body and screw construction and full size adjustment locking nut hold selected speed setting. Adjusting screw, body, and locking nut are brass construction. 0 to 250 psi operating pressure. -65° to +300°F operating temperature.

Port Size (In.)	ARO Model	Stock No.	Each	Shpg. Wt.
1/4	20313-2	4ZJ85	$12.56	0.1
3/8	20313-3	4ZJ86	16.21	0.1
1/2	20313-4	4ZJ87	19.60	0.2

ARO®

Microswitch Actuator

Single-pole, double-throw air actuated electrical switch is rated at 0.5-amps.

Voltage	Max. Operating psi	Max. Temp. Range (°F)	Dimensions (In.) L	W	H	Ingersoll-Rand Model	Stock No.	Each	Shpg. Wt.
5VDC	125	0 to 180	1 15/16	11/16	2⅝	114810	4KB38	$65.75	0.2

FLAT-TOP GATE VALVES THREADED CONNECTION

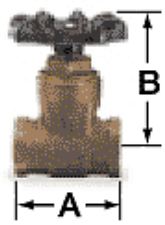

No. 6P964

Nibco bronze flat-top gate valves with non-rising stems are rated at 200 psi up to 200°F. Cast bronze body, wedge and threaded bonnet conform to ASTM Specifications B-584. Handwheel is aluminum, and handwheel screw is stainless steel. Not recommended for use with hydrocarbons.

Nominal Size (In.)	Dimensions (In.) A	B	C	Nibco Series	Stock No.	List	Each	Lots	Lots Qty.	Shpg. Wt.
1/2	1 13/16	2 1/2	—	T29	6P964	$10.36	$9.75	$8.78	10	0.5
3/4	2	2 5/8	—	T29	6P965	13.59	12.79	11.51	10	0.7
1	2 9/16	3 3/16	—	T29	6P966	18.26	17.18	15.46	30	1.2

Y-PATTERN CHECK VALVES THREADED CONNECTION

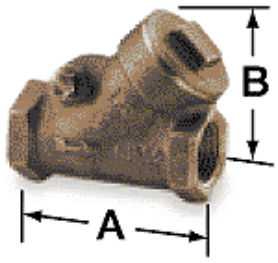

No. 6P988

These valves are rated at 200 psi for shock cold water, oil or gas, 125 psi for both saturated steam to 353°F and fluid to 406°F. Bronze body, seat bonnet, hinge assembly. Conform to ASTM Specifications. Can be installed in horizontal and vertical positions and will operate in a declining plane of no more than 15°. Not for use with reciprocating air compressor service. Conform to Federal Specifications MSS SP-80.

Nominal Size (In.)	Dimensions (In.) A	B	C	Nibco Series	Stock No.	List	Each	Lots	Lots Qty.	Shpg. Wt.
1/2	2 5/16	1 11/16	—	T413B	6P988	$21.93	$20.64	$18.58	10	0.6
3/4	2 15/16	1 7/8	—	T413B	6P989	26.45	24.89	22.41	10	0.1
1	3 5/16	2 1/16	—	T413B	6P990	37.62	35.40	31.86	30	1.6
1 1/4	4 3/16	2 11/16	—	T413B	6P991	50.54	47.56	42.81	20	2.3
1 1/2	4 1/2	2 15/16	—	T413B	6P992	60.00	56.46	50.82	10	3.0
2	5 1/4	3 13/16	—	T413B	6P993	87.67	82.49	74.24	10	5.4

BRONZE GLOBE VALVES THREADED CONNECTION

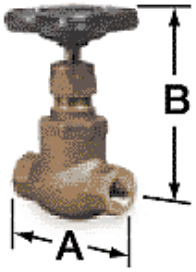

No. 5E468

Valves are rated at 200 psi non-shock cold water, oil or gas and at 125 psi, saturated steam to 353°F, and fluids to 406°F. Bronze body, screw-in bonnet, seat disc, disc holder and nut, packing gland and nut meet ASTM B-62 specifications. Packing is aramid fibers with graphite. Conform to MSS SP-80. Nibco brand.

Nominal Size (In.)	Dimensions (In.) A	B	C	Nibco Series	Stock No.	List	Each	Lots	Lots Qty.	Shpg. Wt.
1/4*	2 1/8	3 1/8	—	T211Y	5E468	$28.05	$26.39	$23.75	5	0.9
3/8*	2 1/8	3 1/8	—	T211Y	5E469	28.05	26.39	23.75	5	0.8
1/2*	2 7/16	3 1/8	—	T211Y	5E470	28.05	26.39	23.75	5	0.9
3/4	3 1/16	4 3/4	—	T211Y	5E471	36.90	34.72	31.26	30	1.6
1	3 11/16	5 11/16	—	T211Y	5E472	50.32	47.35	42.62	20	2.6

(*) Stem and disc (or disc holder) are integral.

GARDEN HOSE VALVES

No. 5E420

Valves have threaded end, solder end to hose outlet. Rated at 125 lb. WOG to 180°F.

Nominal Size (In.)	Dimensions A (In.)	Nibco Series	Stock No.	List	Each	Lots	Lots Qty.	Shpg. Wt.
1/2	3 5/8	61	5E420	$8.03	$7.56	$6.80	10	0.6
3/4	3 3/4	61	5E421	8.03	7.56	6.80	10	0.6

1/2" ANTI-SIPHON FROSTPROOF SILLCOCKS

No. 5E430

Constructed of precision machined bronze/copper components and have a Buna N disc for positive shut-off. Prevents backflow and drains automatically. Allow 1/8" pitch per foot when installing. Nibco brand.

Dimension A (In.)	Nibco Series	Stock No.	List	Each	Lots	Lots Qty.	Shpg. Wt.
4	90	5E428	$19.80	$18.63	$16.77	20	1.1
6	90	5E429	21.83	20.54	18.50	20	1.2
8	90	5E430	21.28	20.03	18.03	20	1.4
10	90	5E431	22.42	21.10	18.99	20	1.4
12	90	5E432	22.66	21.32	19.19	20	1.5

COMMERCIAL GATE VALVES THREADED CONNECTION

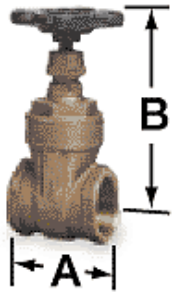

No. 5E443

Block shaped wedge provides better control over wedge travel, eliminating damage to seating surface due to chatter. Pressure ratings: 200 psi nonshock cold water, oil or gas; 125 psi saturated steam to 353°F and fluid to 406°F. Bronze body, wedge, screw-in bonnet, and stuffing box conform to ANTM B-62. Valve conforms to MSS SP-80. Non-rising stem. Nibco brand.

Nominal Size (In.)	Dimensions (In.) A	B	C	Nibco Series	Stock No.	List	Each	Lots	Lots Qty.	Shpg. Wt.
3/8	1 11/16	3 1/2	—	T113	5E439	$17.76	$16.72	$15.05	10	0.7
1/2	1 15/16	3 5/8	—	T113	5E440	15.71	14.79	13.31	10	0.6
3/4	2 1/16	3 29/32	—	T113	5E441	19.52	18.37	16.54	10	1.1
1	2 7/16	4 11/16	—	T113	5E442	24.91	23.44	21.10	30	1.8
11/4	2 5/8	5 7/32	—	T113	5E443	36.68	34.52	31.07	30	2.6
11/2	2 7/8	6 1/4	—	T113	5E444	43.17	40.62	36.57	10	3.5
2	3 1/16	7 1/16	—	T113	5E445	56.43	53.10	47.79	10	5.1

ROTARY VANE COMPRESSORS AND VACUUM PUMPS

- Oil-less design prevents downstream oil contamination problems, allows mounting in non-regular maintenance areas, and provides long life
- Self-adjusting, self-lubricating vanes for maximum efficiency and sustained pump capacity throughout service life
- Cast iron pump housing provides strength and durability as well as an optimum running surface for vanes
- Permanently lubricated and sealed bearings provide long, service-free life
- All models include intake and exhaust filters. For use as a compressor; units are easily converted by removing discharge filter

Rotary vane compressors and vacuum pumps for continuous duty in general vacuum and low pressure applications such as aeration, vacuum frames, packaging equipment, printing presses, air sampling, and graphic arts. Time proven rotary pump design with integral motor combine to provide a high efficiency pneumatic or vacuum supply in a compact unit. Precision machined surfaces provide close tolerance alignment of moving parts for high quality products with maximum performance and long life.

Open dripproof, ball bearing motors with automatic reset thermal protection. Ambient temperature range: 35° to 95°F. Gray finish.

NOTE: Units may not fit your applications as is. Additional plumbing or mounting alterations may be required.

THOMAS® COMPRESSORS & VACUUM PUMPS

E65420 LR2297

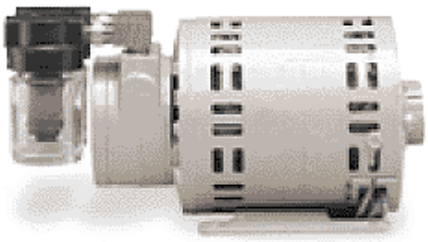

No. 5Z690

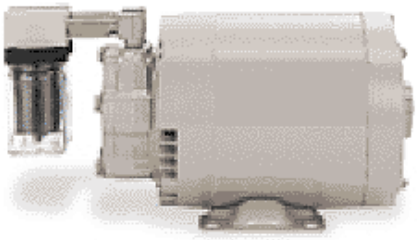

No. 5Z691

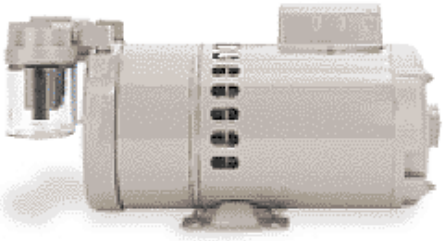

No. 5Z694

Repair Parts Available
1-800-323-0620

PERFORMANCE DATA

HP	Stock No.	Free Air CFM @ Vacuum (Hg) 0	5	10	15	20	25	Max. Vac. (In.)	Free Air CFM @ Pressure (psi) 0	5	10	Max. psi Cont. / Int.†	Port Size (F)NPT (In.) Inlet	Outlet
1/10	5Z690*	1.50	1.10	0.80	0.50	0.20	—	24	1.50	1.20	0.95	10/10	1/8	1/8
1/8	5Z691*	1.85	1.45	1.05	0.65	0.24	—	23	1.85	1.60	1.15	15/15	1/4	1/4
1/6	5Z692*	3.00	2.35	1.75	1.10	0.50	—	24	3.00	2.40	1.80	10/10	1/4	1/4
1/4	5Z693*	4.00	3.25	2.46	1.75	0.92	0.25	26	4.00	3.60	3.20	10/10	1/4	1/4
1/2	5Z694	7.20	5.90	4.43	3.10	1.66	0.30	26	7.20	6.70	6.20	10/15	3/8	3/8
3/4	5Z695	10.00	8.10	6.15	4.30	2.31	0.40	26	10.00	9.50	9.00	10/10	3/8	3/8

(*) Perfomance rated with motor run at 60 Hz. If 50 Hz is used, deduct 17% from ratings.
(†) Intermittent duty not to exceed 15 minute operating intervals.

ORDERING DATA

HP	Volts	Full Load Amps @ 115V, 60 Hz	Hz	RPM	Dimensions (In.) L	W	H	Thomas Model	Stock No.	List	Each	Shpg. Wt.
1/10	115	1.3	50/60	1725	8½	4	5	SR-0015-VP	**5Z690**	$292.50	**$264.25**	8.5
1/8	115	2.9	50/60	1725	12	5¼	6	TA-0015-V	**5Z691**	341.00	**327.25**	17.0
1/6	115	3.4	50/60	1725	14	6⅛	7¼	TA-0030-V	**5Z692**	369.50	**369.50**	32.0
1/4	115	4.6	50/60	1725	14⅜	6⅛	7¼	TA-0040-V	**5Z693**	370.50	**370.50**	24.0
1/2	115/230	8.4	60	1725	16¾	6½	7¾	TA-0075-V	**5Z694**	525.00	**525.00**	42.0
3/4	115/230	9.4	60	1725	17	6½	7¾	TA-0100-V	**5Z695**	555.00	**555.00**	44.0

control devices inc.

VACUUM/PRESSURE RELIEF VALVES

No. 5Z763

- Relieve vacuum from 0-30" Hg., pressure to 20 psi
- Easily convert from vacuum to pressure relief by reversing poppet and spring

Compatible with rotary vane, diaphragm, and piston pumps to 3 HP. To size, match maximum air flow of vacuum pump/compressor to maximum flow capacity of relief valve. Brass body with stainless steel wire spring. Poppet on Stock No. 5Z763 is stainless steel ball; Nos. 5Z764 and 5Z765 have nylon poppet with viton seal.

Flow Cap., CFM	(M)NPT Inlet (In.)	Length (In.)	Hex (In.)	Mfr's. Model	Stock No.	List	Each	Shpg. Wt.
0-2	1/4	1¾	9/16	VR-25	**5Z763**	$8.26	**$8.26**	0.2
0-15	3/8	2	11/16	VR-33	**5Z764**	14.43	**13.47**	0.1
0-54	3/4	2¾	1 1/16	VR-75	**5Z765**	35.59	**30.43**	0.4

AMETEK

WESTWARD®

ASHCROFT®

2½" Dial Liquid-Filled Pressure Gauges

Ideal for use with water, oil, air, and chemicals compatible with beryllium copper, brass, or stainless steel. Offered in a wide selection of ranges and price. 2½" dial, 1/4" NPT connection. 3-2-3% accuracy.

❸ These products are covered by OSHA Hazard Communication Standard, and Material Safety Data Sheets (MSDS) are available. See page opposite inside back cover.

AMETEK

Precision instruments in stainless steel case are ruggedly designed for the most demanding applications.

- 3-2-3% accuracy on beryllium copper and brass internals. 1.6% accuracy on stainless steel internal gauges on Nos. 5ZP91 - 5ZR15
- Crimped ring with brass internals on Nos. 5HK66 - 5HK75 and Nos. 5A041 - 5A045
- Bayonet ring with stainless steel internals on Nos. 5ZP91 - 5ZR15

WESTWARD

Dependable, reliable, and highly affordable gauges are glycerin-filled to dampen pulse and vibration.

- Our value-priced line
- Acrylic window
- Stainless steel case and crimped ring with brass internals

ASHCROFT

Premium quality gauges feature patented PowerFlex™ movement with polyester segment. Provides superior performance and excellent readability. 304 stainless steel cases. Two-year warranty on liquid-filled gauges.

	Ametek			Westward			Ashcroft Series 3005HL			
Range (psi)	Smallest Grad.	Stock No. ❸	Each	Smallest Grad.	Stock No. ❸	Each	Smallest Grad.	Stock No. ❸	Each	Shpg. Wt.
1/4" NPT LOWER CONNECTED										
30	1	5HK66	$8.19	1	5WZ62	$7.61	—	—	—	0.5
60	2	5HK67	8.19	2	5WZ64	7.61	—	—	—	0.5
100	2	5HK68	8.19	2	5WZ60	7.61	—	—	—	0.5
160	5	5HK69	8.19	5	5WZ61	7.61	—	—	—	0.6
300	5	5HK70	8.19	5	5WZ63	7.61	—	—	—	0.5
1/4" NPT CENTER BACK CONNECTED										
30	1	5HK71	8.19	1	5WZ70	7.61	—	—	—	0.6
60	2	5HK72	8.19	2	5WZ72	7.61	—	—	—	0.6
100	2	5HK73	8.19	2	5WZ66	7.61	—	—	—	0.6
160	5	5HK74	8.19	5	5WZ68	7.61	—	—	—	0.6
300	5	5HK75	8.19	5	5WZ65	7.61	—	—	—	0.5
1/4" NPT CENTER BACK CONNECTED										
30	1	5A041	21.75	—	—	—	0.5	5WK80	$24.51	0.6
60	—	—	—	—	—	—	1	5WK83	24.51	0.5
100	2	5A042	21.75	—	—	—	2	5WK77	24.51	0.5
160	—	—	—	—	—	—	5	5WK79	24.51	0.5
200	5	5A043	21.75	5	5WZ69	20.19	—	—	—	0.6
300	—	—	—	—	—	—	5	5WK81	24.51	0.5
1000	20	5A044	21.75	20	5WZ67	20.19	20	5WK78	28.90	0.5
3000	100	5A045	21.75	100	5WZ71	20.19	100	5WK82	28.90	0.5
1/4" LOWER BACK CONNECTED										
30" HG*	—	5ZP92 †	32.20	—	—	—	—	—	—	0.8
30" HG-0-30*		5ZR03 †	32.20	0.5	5WZ78	27.70	—	—	—	0.7
15	0.5	5ZP94 †	32.20	—	—	—	—	—	—	0.8
30	1	5ZR05 †	28.95	—	—	—	—	—	—	0.7
60	2	5ZP96 †	28.95	—	—	—	—	—	—	0.8
100	5	5ZP98 †	28.95	—	—	—	—	—	—	0.8
160	5	5ZR07 †	28.95	—	—	—	—	—	—	0.7
200	10	5ZR09 †	28.95	—	—	—	—	—	—	0.8
300	10	5ZR11 †	28.95	—	—	—	—	—	—	0.7
600	20	5ZR01 †	28.95	10	5WZ77	26.85	—	—	—	0.7
1000	50	5ZR14 †	28.95	—	—	—	—	—	—	0.7
1/4" NPT, LOWER CONNECTED										
VAC*	—	5ZP91 †	24.13	—	—	—	—	—	—	0.6
VAC/30	—	5ZR02 †	24.13	—	5WZ74	21.71	—	—	—	0.6
15	0.5	5ZP93 †	24.13	—	—	—	—	—	—	0.6
30	1	5ZR04 †	24.13	—	—	—	0.5	5WK87	21.64	0.5
60	2	5ZP95 †	24.13	—	—	—	1	5WK91	21.64	0.6
100	5	5ZP97 †	24.13	—	—	—	2	5WK84	21.64	0.5
160	5	5ZR06 †	24.13	—	—	—	5	5WK86	21.64	0.5
200	10	5ZR08 †	24.13	—	—	—	—	—	—	0.5
300	10	5ZR10 †	24.13	—	—	—	5	5WK88	21.64	0.6
400	20	5ZR12 †	24.13	—	—	—	—	—	—	0.6
600	20	5ZP99 †	24.13	10	5WZ75	20.13	—	—	—	0.6
1000	50	5ZR13 †	24.13	—	—	—	20	5WK85	24.51	0.6
2000	100	5ZR15 †	27.60	50	5WZ73	20.40	—	—	—	0.4
3000	—	—	—	—	—	—	100	5WK89	24.51	0.5
5000	—	—	—	—	—	—	100	5WK90	24.51	0.5
PANEL MOUNTING KITS										
Panel Mounting Kit for Ametek Gauges								5A046	3.28	0.1
Panel Mounting Kit for Westward Gauges Nos. 5WZ67, 5WZ69, and 5WZ71								5WZ79	3.05	0.1
Panel Mounting Kit for Ashcroft Gauges								5WL42	5.72	0.1

(*) Measures vacuum 30" HG to 0. Smallest graduations 1" Hg. (**) Measures vacuum 30" HG to 30 psi. Smallest graduations 2"/1 psi and 1" Hg. (†) 316L stainless steel internals.

No. 5WZ62

No. 5WZ65

Economical 2½" Dial, Liquid-Filled Gauges

Dependable, reliable, and highly affordable gauges are glycerine-filled to dampen pulse and vibration. Features include acrylic window, stainless steel case, and crimped ring with brass internals. -40° to 120°F operating temp. range. 1/4" NPT connection. ±3-2-3% accuracy.

Uses: For use with water, oil, air, and chemicals compatible with beryllium copper, or brass.

Range (psi)	Lower Connection: Smallest Grad. (psi)	Lower Connection: Stock No. ❸	Lower Connection: Each	Center Back Connection: Smallest Grad. (psi)	Center Back Connection: Stock No. ❸	Center Back Connection: Each	Shpg. Wt.
VAC-0-30	1	5WZ74	$16.50	1	5WZ78	$17.00	0.6
30	1	5WZ62	16.50	1	5WZ70	17.00	0.6
60	2	5WZ64	16.50	2	5WZ72	17.00	0.6
100	2	5WZ60	16.50	2	5WZ66	17.00	0.6
160	5	5WZ61	16.50	5	5WZ68	17.00	0.6
200	—	—	—	5	5WZ69	17.00	0.6
300	5	5WZ63	16.50	5	5WZ65	17.00	0.6
600	10	5WZ75	16.50	10	5WZ77	17.00	0.6
1000	—	—	—	20	5WZ67	17.00	0.6
2000	50	5WZ73	16.50	—	—	—	0.5
3000	—	—	—	100	5WZ71	17.00	0.7
Panel Mounting Kit for Center Back Connected Gauges					5WZ79	3.50	0.1

❸ Product covered by OSHA Hazard Communication Standard. Material Safety Data Sheets (MSDS) are available; see page opposite inside back cover.

WEKSLER

No. 4TA13

No. 4TA14

Weksler 2½" Dial, Liquid-Filled Gauges

Glycerine-filled gauges feature top quality stainless steel (304SS) case and (316SS) wetted parts. Polycarbonate window. 0.63 mm dial. 1/4" NPT connection. ±3-2-3% accuracy. Gray color.

Uses: For use with water, oil, air, and chemicals compatible with stainless steel.

- Stainless steel bourdon tube and socket
- Black aluminum pointer
- -40° to 150°F operating temp. range

PANEL MOUNT ADAPTER KIT

Enables any Weksler back-connected pressure gauge to be panel mounted. Includes bracket and bolts.

Range (psi)	Smallest Grad. (psi)	Weksler Model	Stock No. ❸	Each	Shpg. Wt.
LOWER CONNECTED					
Vacuum	0.5"	BY42YVC4LW	4RY91	$24.99	0.5
VAC-0-30	2"/1psi	BY42YCB4LW	4RY99	24.99	0.5
30	0.5	BY42YPD4LW	4TA11	24.99	0.5
60	1	BY42YPE4LW	4RY93	24.99	0.5
100	2	BY42YPF4LW	4RY95	24.99	0.5
160	2	BY42YPG4LW	4TA13	24.99	0.5
200	5	BY42YPH4LW	4TA15	24.99	0.5
300	5	BY42YPJ4LW	4TA17	24.99	0.5
600	10	BY42YPM4LW	4RY97	24.99	0.5
1000	20	BY42YPP4LW	4TA19	24.99	0.5
2000	50	BY42YPS4LW	4TA21	24.99	0.4
BACK CONNECTED					
Vacuum	0.5"	BY42YVC4CW	4RY92	30.00	0.5
VAC-0-30	2"/1psi	BY42YCB4CW	4TA10	30.00	0.5
30	0.5	BY42YPD4CW	4TA12	30.00	0.5
60	1	BY42YPE4CW	4RY94	30.00	0.5
100	2	BY42YPF4CW	4RY96	30.00	0.5
160	2	BY42YPG4CW	4TA14	30.00	0.5
200	5	BY42YPH4CW	4TA16	30.00	0.5
300	5	BY42YPJ4CW	4TA18	30.00	0.5
600	10	BY42YPM4CW	4RY98	30.00	0.5
1000	20	BY42YPP4CW	4TA20	30.00	0.5
Panel Mount Adapter Kit for Back Connected Gauges			4TA22	5.00	0.2

❸ Product covered by OSHA Hazard Communication Standard. Material Safety Data Sheets (MSDS) are available; see page opposite inside back cover.

WIKA

Made In U.S.A.

No. 4VE27

No. 4VE18

WIKA 2½" Dial, Liquid-Filled Gauges

Economical, yet highly accurate, gauges have special O-ring seal around connection to allow gauge to be field-serviced. Sturdy stainless steel (304SS) case protects gauge in harsh environments. Ideal for hydraulic equipment in OEM and general industrial applications. Dependable Swiss Made movement. Accuracy: ±2-1-2% of span (ASME B40, 100 Grade A). 1/4" NPT connection. Silver color.

Uses: For use with water, oil, air, and chemicals compatible with beryllium copper, or brass.

- Copper alloy socket and Bourdon tube
- Black aluminum pointer
- -4° to 140°F operating temp. range
- Glycerine-filled

Range (psi)	Smallest Grad. (psi)	WIKA Series	Stock No. ❸	Each	Shpg. Wt.
LOWER CONNECTED					
30	0.5	213.532	4VE29	$20.80	0.5
60	1	213.532	4VE32	20.80	0.5
100	2	213.532	4VE19	20.80	0.6
160	2	213.532	4VE22	20.80	0.5
300	5	213.532	4VE27	20.80	0.6
1000	20	213.532	4VE17	20.80	0.6
3000	50	213.532	4VE25	20.80	0.6
5000	100	213.532	4VE30	20.80	0.6
10,000	200	213.532	4VE15	20.80	0.6
15,000	200	213.532	4VE20	20.80	0.6
BACK CONNECTED					
30	0.5	213.532	4VE28	22.10	0.6
60	1	213.532	4VE31	22.10	0.6
100	2	213.532	4VE18	22.10	0.6
160	2	213.532	4VE21	22.10	0.6
200	5	213.532	4VE23	22.10	0.6
300	5	213.532	4VE26	22.10	0.6
1000	20	213.532	4VE16	22.10	0.6
3000	50	213.532	4VE24	22.10	0.6

❸ Product covered by OSHA Hazard Communication Standard. Material Safety Data Sheets (MSDS) are available; see page opposite inside back cover.

NOTE: This photograph represents the model line and not necessarily the size you choose.

JOURNEY JT816TA2

The Journey Series is Pace American's value leader. It's priced right for those who need a great trailer for recreational use or light commercial use as well. If you simply need reliable, safe, easy trailering and don't wish to spend a lot, Journey is the model for you. And they're built by the number one name in enclosed cargo trailers, which is why Journey trailers bring brand name resale value at trade-in time. These popularly-priced trailers feature standard EZ-ride suspensions, all-steel frame construction and a Galvalume Uni-Roof™ design. Choose options and special packages like the Journey Plus—a loaded model for a bargain price—or Journey Motorcycle. The cycle package is featured in Pace's motorcycle brochure. So if you're looking for hassle-free towing with exceptional value, consider our Journey.

STANDARDS

- Aerodynamic front end trailer design
- Precision, jig-built, solid core side door with a flushlock and premium strap hinges
- Formed steel rear header
- Double rear swing doors with semi-style camlocks and T-nuts
- T-nuts on doors
- Automotive-style weather stripping
- Quality trailer-rated radial tires
- Tube roof bows
- Modular-style wheels with E-coat prime and powder coat finish
- Trailer Rated Bias Ply Tires
- Aluminum fenders
- Galvalume Uni-Roof design (most models)
- All-wheel electric brakes with 12v breakaway switch and battery included (TA2 and higher)
- High-tech roof sealant
- Frame undercoating
- Silver paint on exposed frame
- Frames phosphate power washed and all exposed metal is painted with premium quality paint
- Bolted or welded-on safety cables
- Premium brand nose jacks
- 12v fuse/junction box
- Automotive-quality wiring run through plastic grommets in trailer frame
- Premium semi-trailer quality exterior lighting
- Full DOT lighting
- Conspicuity treatment included (TA3 and above)
- Long life coating on fasteners
- Strong premium all-steel welded uni-body frame
- Dexter EZ lube axles
- 3-year honest, fast and fair limited trailer warranty
- 11 standard colors

OPTIONS

- Convenience package
- Journey Plus package
- Journey motorcycle package
- Spare tire & mounts
- Stoneguard (8" or 24")
- 11 color choices at no charge
- Electric brakes
- Non-powered roof vent
- D-rings
- Medium duty ramp door
- Dome light
- 3/4" plywood floor upgrade
- Light duty ramp door
- Heavy duty ramp door
- Side door upgrades
- Motorcycle wheel chock
- 6" extra height
- Sand foot
- Ladder racks
- Fold down jacks
- .030 top wrap upgrade
- 3/8" plywood wall upgrades
- No wheel well (7w)
- Double rear doors (5w)
- 12v switch

SPECIFICATIONS

Overall Length	19'10"
Interior Length	16'4'
Box Width/OA Width	7'10" /8'1"
Overall Height	8'3"
Interior Width	7'6"
Interior Height (to center of roof bow)	6'5"
Platform Height/Ball Height	20"
Rear Doors	Double
Rear Door Width	
Rear Door Height	
Axles	3500# Tandem
Brakes	Electric
Frame	
Tire Size	14" Bias
Hitch Ball Size	2-5/16"
Curb Weight	2400#
Hitch Weight	240#
Exterior	.030 Smooth
Floor	3/4" plywood
Sidewalls	GenPly
Payload Capacity	4600#
GWVR	7000#

NOTE: All standards, options, special packages, construction and specifications listed are subject to change. Photography may show optional items available at additional cost. Please consult your authorized dealer for the latest product information.

FLOORPLAN PLAYGROUND

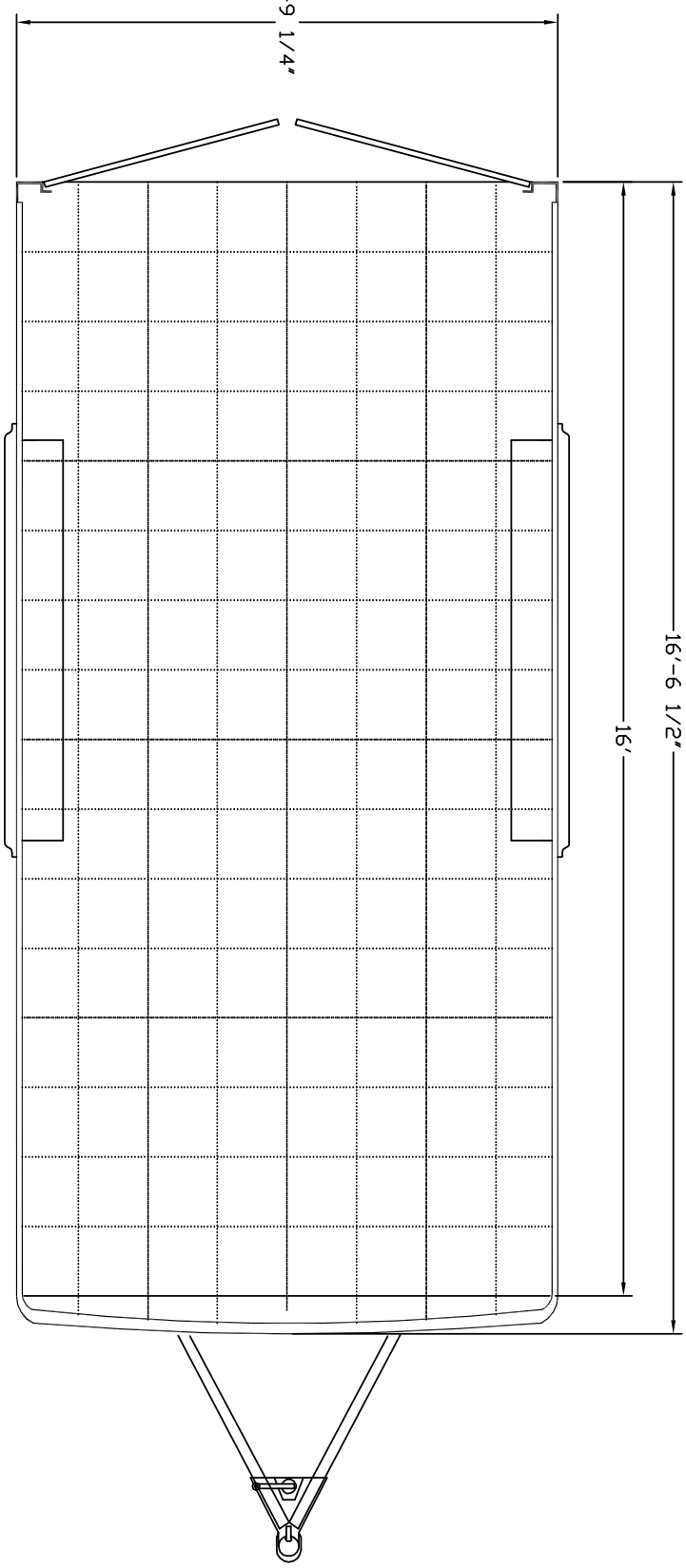

DATE:

TITLE: PLAN VIEW

MODEL: JT 816TA2

DWG NO:

REV. #	DATE	DESCRIPTION

NOTES:
GRID=12"×12" SQUARES

Pace AMERICAN
11550 HARTER DRIVE
MIDDLEBURY, IN. 46540

SCALE: N.T.S.
APPROVED BY:
DWG. BY: RAM
REVISED:

PACE AMERICAN CLAIMS PROPRIETARY RIGHTS TO THE MATERIAL DISCLOSED HEREIN. NEITHER THIS DRAWING NOR ANY REPRODUCTION THEREOF MAY BE USED TO MANUFACTURE ANYTHING WITHOUT PERMISSION IN WRITING.

Dayton®

No. 3C188
Double Panel Models
for 54 and 60" Fans

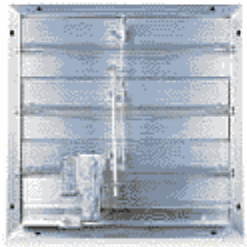

No. 4C560
Single Panel Models
for 16 to 48" Fans

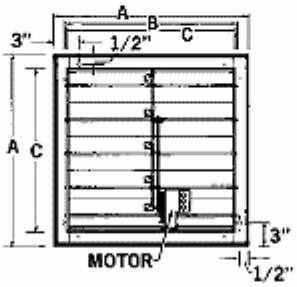

Motorized Dampers

These dampers are for fans 16 to 60" in diameter. They feature center pivoting for a full 90° opening and welded corner construction. Can be mounted horizontally or vertically. Use for intake and exhaust applications. Up to 3500 FPM maximum velocity. Heavy-duty dampers have factory-installed motors.

Tie rod linkage is attached to the blades on the side of the fan, assuring dependable service. Frames are 3"D. Both frames have 1½" flange. Ample 9/32 x 1/2" oblong mounting holes. 16 to 48" units are single panel; 54 and 60" units are double panel. Dayton brand.

EXTRUDED ALUMINUM DAMPERS

Heavy-duty dampers have extruded aluminum frame and blades. Power On to open; spring return to close.

GALVANIZED STEEL DAMPERS

For normal applications. Galvanized steel frame and blades. Power On to open; spring return to close. Frame is 14 gauge. Blades are 16 gauge.

Replacement Parts Available
1-800-323-0620

Ordering Data

For Fan Dia. (In.)	Volts, 60/50 Hz	Overall Square (In.) A	Frame Opening Required (In.) B	Frame Less Flange (Sq. In.) C	Total Opening (Sq. Ft.)	Motor Bracket Extension (In.)†	Extruded Aluminum Dampers Stock No.	List	Each	Shpg. Wt.	Galvanized Steel Dampers Stock No.	List	Each	Shpg. Wt.
16	120/240	19	17	16	1.386	6⅛	4C560	$277.15	$166.00	12.0	3C725	$204.54	$130.30	19.0
20	120/240	23	21	20	2.201	6⅛	4C561	294.61	176.50	15.0	3C726	217.29	139.10	25.0
24	120/240	27	25	24	3.243	6⅛	3C315	328.64	197.00	19.0	3C727	242.62	155.75	32.0
30	120/240	33	31	30	5.378	10¼	3C234	510.80	306.50	39.0	3C728	391.10	247.25	42.0
36	120/240	39	37	36	7.951	10¼	3C131	583.57	350.25	43.0	3C729	445.03	286.50	70.0
42	120/240	45	43	42	10.879	10¼	3C235	683.60	410.25	52.0	3C730	511.48	334.00	74.0
48	120/240	51	49	48	14.349	10¼	3C132	740.18	444.75	63.0	3C731	553.08	355.50	91.0
54	240	57	55	54	18.298	10¼	3C188 #	1081.12	649.50	90.0	3C732	826.35	527.00	115.0
60	240	63	61	60	22.726	10¼	3C189 #	1213.87	729.50	107.0	3C733	929.32	591.50	130.0

(†) From damper frame to end of bracket. (#) Double panel damper.

No. 4F421

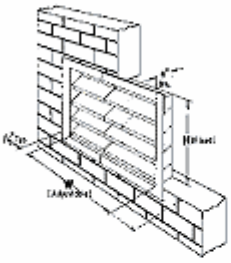

Adjustable Frame Intake Louvers

Flexible installation is provided by adjustable frame and fixed blade. Use multiple sections when larger sizes are needed. Features include galvanized bird screen with 1/2" square mesh and blades set at 45° angle with 4" blade spacing. Ratings are determined in an AMCA certified laboratory. Recommended intake velocity not to exceed 350 FPM. Exhaust velocity not to exceed 500 FPM.

GALVANIZED STEEL LOUVERS

For many intake applications where moderate corrosion resistance is desired. 20-gauge galvanized steel with 1½" face flange.

PREMIUM ALUMINUM LOUVERS

For extra corrosion resistance in problem environments.

Replacement Parts Available
1-800-323-0620

Ordering Data

Adjustable Width (In.)	Fixed Height (In.)	Maximum Intake CFM	Maximum Exhaust CFM	Galvanized Steel Louvers Stock No.	List	Each	Shpg. Wt.	Premium Aluminum Louvers Stock No.	List	Each	Shpg. Wt.
12 to 18	14	615	875	4F421	$97.00	$58.10	12.0	4F951	$117.40	$70.30	4.0
18 to 24	18	1050	1500	3C972	142.25	85.20	19.0	4F952	171.29	102.60	11.0
18 to 30	24	1750	2500	3C973	169.26	101.40	26.0	4F953	215.40	129.00	15.0
21 to 36	30	2625	3750	4F422	228.00	136.50	37.0	4F954	300.43	180.00	21.0
24 to 36	36	3150	4500	3C974	283.37	170.00	60.0	4F955	359.21	215.50	33.0
36 to 48	36	4200	6000	3C975	363.45	217.75	65.0	4F956	455.21	273.00	36.0
24 to 42	42	4290	6125	4F423	434.60	260.25	55.0	4F957	514.45	308.50	31.0
24 to 36	48	4200	6000	3C976	389.04	233.00	66.0	4F958	461.22	276.50	37.0
36 to 48	48	5600	8000	3C977	491.53	294.75	105.0	4F959	563.20	337.50	58.0

INTAKE GUARDS FOR EXHAUST FANS

Intake guards comply with OSHA regulations

Screens are hinged and removable for easy access

20-Gauge galvanized steel construction

For direct and belt-drive propeller fans

Shipped knocked down with assembly hardware included

WARNING! OSHA complying guards are required when fan is installed within 7 ft. of floor, working level or within reach of personnel. Review OSHA Codes.

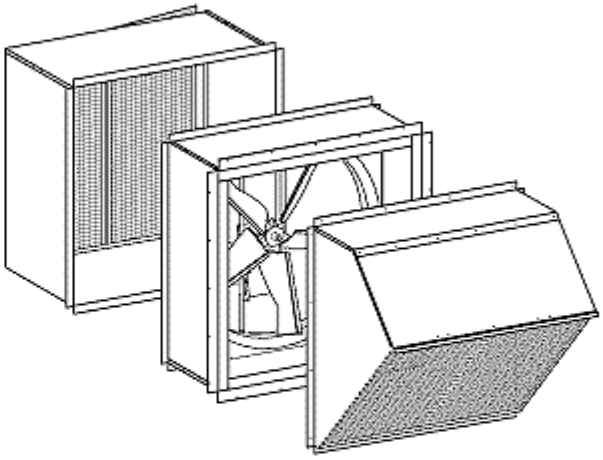

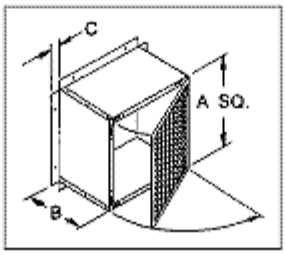

Single Screen

Double Screen

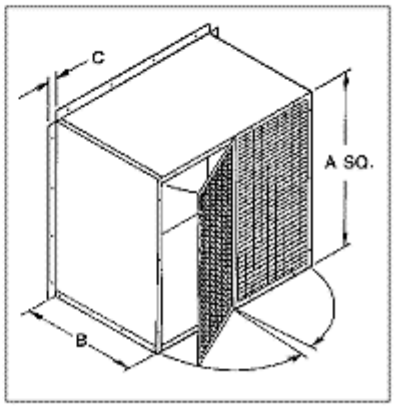

Replacement Parts Available
1-800-323-0620

SINGLE SCREEN INTAKE GUARDS

Fan Size (In.)	Dimensions (In.) A	B	C	Stock No.	List	Each	Shpg. Wt.
12	16⅛	13	1¼	6D581	$125.94	**$77.00**	13.0
16	21⅛	13	1¼	6D582	135.72	**82.95**	15.0
18	22⅛	13	1¼	6D583	145.75	**89.05**	17.0
20	24⅛	14	1¼	6D584	156.04	**95.35**	19.0
24	28⅛	20	1¼	6D585	231.59	**141.50**	35.0
30	34⅛	20	1¼	6D586	278.40	**170.25**	39.0

DOUBLE SCREEN INTAKE GUARDS

Fan Size (In.)	Dimensions (In.) A	B	C	Stock No.	List	Each	Shpg. Wt.
36	40⅛	27	2	6D587	$338.74	**$207.00**	61.0
42	46⅛	30	2	6D588	465.17	**284.25**	61.0
48	54⅛	32	2	6D589	629.10	**384.50**	120.0
54	60⅛	34	2	6D590	753.79	**460.75**	155.0
60	66⅛	37	2	6D591	832.74	**509.00**	167.0

Need OEM repair and maintenance parts?

Look for this symbol next to a product.
It tells you that Grainger Parts can directly supply you with OEM parts for that item and manufacturer.

Call 1-800-323-0620
for parts replacement service 24 hours a day.

HAZARDOUS LOCATION EXHAUST FANS

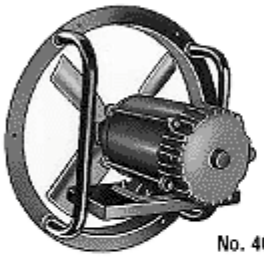

No. 4C369

For heavy duty ventilation of atmospheres containing flammable or explosive vapors, gases, or dusts (per NEC 500).

Motors only are UL Listed (E62643) 115 VAC, 60 Hz (4C371& 3C772: 115/230 VAC, single-phase I, group D and class II, groups E, F, & G applications.

Spark resistant cast aluminum fan blades

Fans have a heavy steel circular frame with ample mounting holes and a fixed position motor base attached to rigid tubular supports.

All units have 4-blade propellers except 3C772: 6-blade

Note: Consult local ventilation or fire inspector for local code requirements

Note: Units are not for use where motor or blades will accumulate paint residue

Note: OSHA complying guards are strongly recommended when fan blades are exposed and within reach of personnel.

Dayton Electric Mfg. Co. certifies that the ventilators shown hereon are licensed to bear the AMCA seal. The ratings shown are based on tests and procedures performed in accordance with AMCA Publication 211 and AMCA Publication 311 and comply with the requirements of the AMCA Certified Ratings Program.

Hazardous Location Exhaust Fan Dimensions			Recommended Accessories*			
Blade Diameter (In.)	Outside Dimensions (In.)	Venturi Clearance Dimensions (In.)	Intake Guard Stock No.	Each	Aluminum Wall Shutters Stock No.	Each
12	16¼	13½	6D582	$82.95	4C556	$23.43
16	20¼	17½	6D583	89.05	4C557	30.40
18	22¼	19½	6D584	95.35	4C558	34.05
20	24½	21½	6D585	141.50	4C559	36.50
24	28¼	25½	6D586	170.25	3C308	43.90
30	33½	30½	6D586	170.25	3C309	52.30

(*) Electrically ground all components in hazardous location system.

Blade Dia. (In.)	CFM Air Delivery* 0.0" SP	0.125" SP	0.25" SP	0.375" SP	Sones @ 5ft./0.0"SP**	RPM	Motor HP	Full Load Amps	Watts	Stock No. †	Each	Shpg. Wt.
12	900	700	585	315	14.2	1725	1/4	4.5	193	4C020	$422.75	39.0
16	1980	1570	1300	1095	22	1725	1/4	4.5	320	4C369	457.25	42.0
18	2375	1935	1520	1335	23	1725	1/4	4.5	313	4C370	481.25	43.0
20	2560	2015	1500	1165	23	1725	1/4	4.5	290	2C963	494.75	45.0
24	3345	2695	2075	1520	29	1725	1/3	6.4	383	2C856	616.00	47.0
24††	4695	4080	3395	2740	35	1725	1/2	9.0/4.5	667	4C371	700.50	50.0
30††	7120	6095	5000	3800	28	1140	3/4	9.6/4.8	653	3C772	774.00	48.0

(*) Performance shown is for installation type A, Free inlet, Free Outlet. Speed (rpm) shown is nominal. Performance is based on actual speed of test. Performance ratings include the effects of guard and shutter in the airstream.
(**) The sound ratings shown are loudness values in fan sones at 5 ft. (1.5 m) in a hemispherical free field calculated per AMCA Standard 301. Values shown are for installation type A, free inlet fan sone levels.
(†) Electrically ground all components in Haz Loc system. (††) Units are 115/230 VTC.

CONDUIT BOX for HAZARDOUS LOCATION FAN MOTORS

No. 4X788

For use on Dayton brand hazardous location fan motors above. Has hole for self-tapping grounding screw. Easily installed. UL Listed. Gray finish.

No. 4X788. Shpg. wt. 1.6 lbs. List.....$34.00
Each.....**$29.90**

6 TO 12" DIAMETER RING FANS

No. 2C100

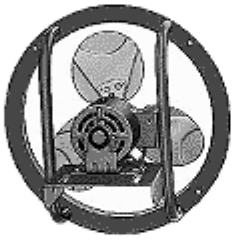

Replacement Parts Available 1-800-323-0620

For exhausting and cooling operations

Totally enclosed, shaded pole, 115V, 60 Hz motor

Galvanized steel ring on No.'s 2X221, 4C107, and 2C107; heavy gauge steel angel frame with baked on gray polyester finish

Fan No.'s 2C221 and 4C107 have wiring junction box and 12" leads; No's 2C107 and 2C100 have wiring junction box and 6" leads

Propeller Dia. (In.)	CFM @ 0.0" SP	HP	Full-Load Amps	Motor Enclosure	Junction Box	Mtg. Holes OC (In.)	Stock No.	List	Each	Shpg. Wt.
6	150	1/100	0.73	TE	No	11⅜	2C221	$80.34	$49.60	3.3
9	290	1/70	0.70	TE	No	11⅜	4C107	92.25	56.95	4.7
12	665	1/30	1.20	TE	Yes	13⅜	2C107	109.44	67.55	6.5
12	1075	1/20	1.50	TE	Yes	14⅜	2C100	219.27	135.30	16.0

Dayton®

No. 4HX74
Wall-Mount
Backdraft Damper

Backdraft Dampers

Designed for direct or belt-drive centrifugal roof and wall ventilators.

WARNING: Not for use with any kitchen exhaust application.

ROOF-MOUNT UNITS

Designed with a 19-ga. galvanized steel frame, 2" deep with 1" flange. Aluminum blades have felted edges for quiet operation. Pre-punched conduit hole knock-out.

WALL-MOUNT UNITS

Each have 16-ga. extruded aluminum frame, 1½" deep with 1⅜" flange. Wall-mount blades are aluminum with felted edges.

Damper Size (In.)	Outside Flange (In.)	For Use With Dayton Ventilators (UL 705 Only)	Stock No.	Each	Shpg. Wt.
ROOF-MOUNT BACKDRAFT DAMPERS					
9½ x 9½	11½ x 11½	2C912, 4WN57	3TZ50	$20.63	2.5
12 x 12	14 x 14	4HX80, 4HX91, 4HZ32, 4HZ33, 4HZ36, 4HZ37, 4YC64-67, 4YC86	4HX64	19.01	3.0
15 x 15	17 x 17	4HX81, 4HX82, 4HX92, 4HX93, 4HZ40, 4HZ41, 4HZ44, 4HZ45, 4YC68-71, 4YC88, 4YC87, 4YC89, 4YC90	4HX65	23.35	4.2
11 x 11	13¾ x 13¾	4HX83, 4HX84, 4HX94, 4HX95, 4HZ48, 4HZ49, 4HZ52, 4HZ53, 4YC48, 4YC49, 4YC72-75	4HX66	27.70	5.5
12 x 12	14¾ x 14¾	4HX85,4HX86,4HX96,4HX97,4HZ56, 4HZ57, 4YC50, 4YC51, 4YC76-77	4HX67	35.80	8.8
27 x 27	29 x 29	4HX87,4HX98,4YC52,4YC53,4YC54, 4YC55	4HX68	41.85	11.0
35 x 35	37 x 37	4HX88, 4HX99	4HX69	58.95	17.0
39 x 39	41 x 41	4HX89, 4HZ01	4HX70	76.40	20.0
50 x 50	52 x 52	4HX90	4HX71	100.50	30.0

Damper Size (In.)	Outside Flange (In.)	For Use With Dayton Ventilators (UL 705 Only)	Stock No.	Each	Shpg. Wt.
WALL-MOUNT BACKDRAFT DAMPERS					
8 x 8	10¾ x 10¾	4HZ34, 4HZ35	4HX72	$16.25	1.7
10 x 10	12¾ x 12¾	4HZ38, 4HZ39	4HX73	23.45	2.1
11 x 11	13¾ x 13¾	4HZ42, 4HZ43	4HX33	25.75	2.7
12 x 12	14¾ x 14¾	4HZ46, 4HZ47	4HX74	28.30	2.9
13 x 13	15¾ x 15¾	4HZ50, 4HZ51	4HX75	30.75	7.0
14 x 14	16¾ x 16¾	4HZ54, 4HZ55	4HX76	32.40	7.5
15 x 15	17¾ x 17¾	4HZ58, 4HZ59	4HX77	35.80	4.0

Dayton®

No. 2C517

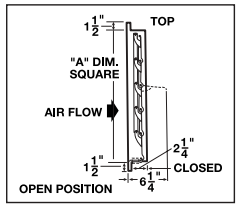

Economy Wall Shutters

These light-duty shutters open automatically when the exhaust fan is turned on. Frame is 19-ga. galvanized steel. Aluminum blades are 26-ga. mill finish. Stainless steel bushing and pivot pins. Felt seal on leading edge of blade for quiet operation. Maximum velocity is 1500FPM.

Recommended distance from fan is 1/3 diameter of fan blade. Shutter mounts on exterior wall for easy removal and maintenance. When blades are in open position, open measurement is 6¼". Weather-stripping is part of frame construction adding strength of frame.

WARNING: Do not use with Vaneaxial or Tubeaxial fans.

Fan Diameter (In.)	Dimensions (In.) A	B	Frame Depth (In.)	Stock No.	Each	Shpg. Wt.
10	10½	12	2¼	2C517	$14.84	3.1
12	12½	15	2¼	2C518	16.45	3.6
16	16½	19	2¼	2C520	21.40	5.0
18	18½	21	2¼	2C521	23.98	6.6
20	20½	23	2¼	2C522	25.70	6.7
24	24½	27	2¼	2C523	30.95	8.3

White Rodgers

Columbus Electric®

For Repair Parts
Call Your Local Branch

No. 2E449

No. 4PU50

Hazardous Location Heating Thermostat

NO. 2E449

Coiled hydraulic sensing element.

Uses: For controlling heating systems in explosive environments; Class I, Group D, and Class II, Groups E, F, and G locations.

- 7/32" thick cast aluminum housing
- Pilot Duty 5.6A @ 24VAC
- 1/2" female pipe thread in bottom of case for wiring connection
- Mounting: Surface

NO. 4PU50

Double pole thermostat has snap action switch operation. Features a bimetal actuator.

Includes Fahrenheit and Celsius temperature scale. Class I Groups C and D, Class II Groups E, F, and G. NEMA Class 7 Div-1 approved. UL and CSA Certified.

Uses: Heating and cooling applications.

- Voltage Rating: 120-277
- Wire termination: wire leads
- Accuracy: Heat ±2°F, Cool ±4°F

Stock No.	Inductive, Amps 120VAC	Inductive, Amps 240VAC	Resistive, Amps 120VAC	Resistive, Amps 240VAC
2E449	14	7	25	20
4PU50	4.5	4.5	22	22

Switch Type	Switch Action	Control Setting Range (°F)	Fixed Diff. (°F)	Dim. (In.) H	W	D	Brand	Mfr. Model	Stock No.		Each	Shpg. Wt.
SPST	Open on Rise	40-90	3	9	5⅜	4⅝	White-Rodgers	2A20-2	2E449	✓	$341.50	4.6
DPDT	Open or Close	50-90	3	5½	6⅜	5⅝	Columbus Electric	EPETD8DJ	4PU50		212.50	5.5

Honeywell®

White Rodgers

No. 2E858

Fan Coil Thermostats

3-speed (High-Med-Low) manual fan control. Provide thermostatic control of one or two line voltage valve(s). Off position breaks both heating and cooling circuits. Mounting: Standard 4 x 4" Vertical Box.

HONEYWELL

No. 2E858 features automatic changeover heating to cooling.

WHITE-RODGERS

No. 1N172 features manual changeover heating to cooling. Includes thermometer and subbase. Also mounts on two-gang outlet box.

Stock No.	Inductive Amps 120VAC	Inductive Amps 240VAC	Cooling 120-240VAC
2E858	5.5	2.75	—
1N172	5.5	2.75	—

Switch Type	Temp. Range (°F)	Fixed Diff. (°F)	Dimensions (In.) H	W	D	Brand	Mfr. Model	Stock No.		Each	Shpg. Wt.
SPDT	55-95	—	4⅝	4 15/16	1 5/16	Honeywell	T4039M1004	2E858	✓	$100.75	0.7
SPDT	36-90	1.5	4½	4½	2¼	White-Rodgers	1A11-2	1N172	✓	81.30	1.1

Columbus Electric®

Dayton®

No. 4PU48

SPDT and DPST Thermostats

Bimetal operated snap switch.

Uses: For blowers, furnace fans, and baseboard and ceiling heaters.

- Mounting: Standard 2 x 4" Vertical Box
- Heating or cooling applications

NO. 4PU48

Double pole thermostat is for heat only. Accuracy is ±2°F. UL and CSA Certified.

Stock No.	Inductive, Amps 120VAC	Inductive, Amps 240VAC	Resistive, Amps 120VAC	Resistive, Amps 240VAC
2E158	4.5	4.5	22	22
4PU48	4.5	4.5	22	22

Switch Type	Switch Action	Control Setting Range (°F)	Fixed Diff. (°F)	Dim. (In.) H	W	D	Brand	Mfr. Model	Stock No.	Each	Shpg. Wt.
SPDT	Open or Close	50-90	2/4	4¾	2¾	2¾	Columbus Electric	ETD-5S-6S	2E158	$15.50	0.7
DPST	Open on Rise	50-90	3	4¾	2¾	2¾	Dayton	—	4PU48	15.39	0.8

JOHNSON CONTROLS

PENN®

For Repair Parts
Call Your Local Branch

Multipurpose Thermostat

Field adaptable to vertical or horizontal mounting, knob or concealed adjustment, with or without thermometer. Adjustable range stops under cover.

Uses: For unit heaters, fan coils, unitary coolers, and cooling equipment.

- Hydraulic sensing element
- Mounting: Standard 2 x 4" Electrical Box

Type	Heating, Amps 120VAC	Heating, Amps 240VAC	Cooling, Amps 120VAC	Cooling, Amps 240VAC
Full Load	16	8	8	8
Locked Rotor	96	48	48	48

Switch Type	Temp. Range (°F)	Fixed Diff. (°F) Htg./Cooling	Dimensions (In.) H	W	D	Stock No.		Each	Shpg. Wt.
SPDT	40-90	3/3.5	4 11/16	3	2⅞	2E503	✓	$78.70	0.9

EGS Electrical Group Appleton

For Repair Parts Call Your Local Branch

No. 7D781

No. 7D782

No. 7D783

No. 7D784

No. 7D785

No. 7D786

No. 7D790

No. 7D791

No. 2V743

Hazardous Location Fixtures

MERCMASTER™ JR. HID

Corrosion-resistant, gray epoxy powder coat finish, and copper-free aluminum construction.

Housing: All units have glass globe.

Installation: Choice of ceiling, pendant, or wall bracket mounting. 3/4" hub.

Reflectors: (Optional, see table below). Made of fiberglass reinforced polyester.

Approvals: Class I, Div 2, Groups A, B, C, and D, Class II, Div 1 and 2, Groups E and F, UL 1598A, and NEMA 4X.

Uses: Tunnels, walkways, bridges, storage facilities, processing plants, parking lots, foundries, manufacturing plants, power plants, and other locations where moisture, dirt, dust, or corrosive atmospheres are present.

MERCMASTER™ III HID

Great for areas where dust, dirt, and corrosive elements are present.

Installation: 3/4" hub.

Housing: Corrosion-resistant, gray epoxy powder coat finish, and copper-free aluminum construction. All units have glass globe.

Reflectors: (Optional, see table below). Made of fiberglass reinforced polyester.

Approvals: Class I, Div 2, Groups A, B, C, and D, Class II, Div 1 and 2, Groups E and F, 150 and 175 Watts Class II Div. 1 and 2, Groups E, F and G, Class III, UL 1598A, NEMA 4X.

Uses: Pulp and paper mills, processing plants, chemical plants, oil refineries, foundries, manufacturing plants, storage areas, waste and sewage treatment.

DUST VAPOR/IGNITIONPROOF INCANDESCENT

For highly volatile dust areas such as grain storage, mining, coal handling, and in areas where moisture and corrosives elements are present.

Installation: 1/2" pendant mount hub which allows fixture to be hung with rigid conduit.

Housing: Corrosion-resistant, gray epoxy powder coat finish and copper-free aluminum construction, and glass globe.

Approvals: Class II Div 1 and 2, Groups E, F, and G, Class III.

Description	Suggested Lamp (Not Included)	Fixture	Mount	Rated Amp @ 120V †	Max. Dimensions (In.) L	W	H	Appleton Model	Stock No.		Each	Shpg. Wt.
MERCMASTER JR. HID FIXTURES												
70W HPS Ceiling Mount	2V632	2V744	2V746	0.73	—	8.38	15.09	MC7075-120	7D781		$258.00	11.7
70W HPS Pendant Mount	2V632	2V744	2V745	0.73	—	8.38	15.22	MA7075-120	7D782		248.75	11.0
70W HPS Wall Mount	2V632	2V744	4V288	0.73	—	8.38	14.53	MW7075-120	7D783	*	284.25	14.7
MERCMASTER III HID FIXTURES												
150W HPS Ceiling Mount	2V452	6VW95	6VW97	1.8/1.05/.90/.80	—	13.38	19.61	KPCL1575MT	7D784	†	341.75	21.9
150W HPS Pendant Mount	2V452	6VW95	6VW96	1.8/1.05/.90/.80	—	13.38	19.61	KPAL1575MT	7D785	†	343.25	22.1
150W HPS Wall Mount	2V452	6VW95	6VW98	1.8/1.05/.90/.80	—	13.38	21.55	KPWBL1575MT	7D786	†	373.50	25.2
175W MH Ceiling Mount	4V550	5KF69	6VW97	1.8/1.1/.90/.78	—	13.38	19.61	KPCH1775MT	7D787	†	497.50	19.9
175W MH Pendant Mount	4V550	5KF69	6VW96	1.8/1.1/.90/.78	—	13.38	19.61	KPAH1775MT	7D788	†	499.50	15.1
175W MH Wall Mount	4V550	5KF69	6VW98	1.8/1.1/.90/.78	—	13.38	21.55	KPWBH1775MT	7D789	†	530.00	23.2
400W MH Ceiling Mount	2V658	5KF70	6VW97	4.0/2.3/2.0/1.75	—	13.44	22.59	KPCH4075R-MT	7D790	†	762.00	38.9
400W MH Pendant Mount	2V658	5KF70	6VW96	4.0/2.3/2.0/1.75	—	13.44	20.77	KPAH4075R-MT	7D791	†	763.50	37.1
400W MH Wall Mount	2V658	5KF70	6VW98	4.0/2.3/2.0/1.75	—	13.44	22.77	KPWBH4075RMT	7D792	†	793.00	42.2
MERCMASTER III FIXTURE ACCESSORIES												
150W HPS & 175W MH Cast Aluminum Wire Guard	—	—	—	—	—	11.0	7.87	KGU-2	6VW99		30.00	1.2
DUST/VAPOR/IGNITION-PROOF INCANDESCENT FIXTURE												
200W Pendant Mount	2V287	—	—	1.67	—	5.25	9.0	EDTP2050G	2V743	✓	84.15	3.6

(†) Multiple amperages are rated at 120/208/240/277V. (*) Includes 4V289 Conduit Outlet Box

HAZARDOUS LOCATION

QMARK A Division of Marley Electric Heating

LR11895

Replacement Parts Available 1-800-323-0620

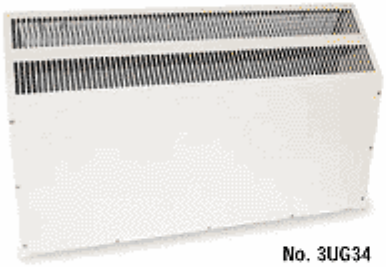

No. 3UG34

Factory Mutual System Approved

FREE DELIVERY on orders of $200 or more

See Freight Policy

Certified for use in Class 1, Groups B, C and D, Division 1 and 2 atmosphere having ignition temperature code ratings down to 392°F (200°C, T3)

Sloped top cabinet prevents objects from being set on top and restricting airflow

Easily mounted with brackets provided for wall installation

Heavy gauge steel with epoxy paint finish for excellent corrosion resistance

Designed for typical applications involving petroleum refineries and gasoline storage and dispensing areas, industrial firms that use flammable liquids in dip tanks for parts cleaning, petrochemical companies manufacturing chemicals, dry cleaning plants, utility and natural gas plants, aircraft hangers, fueling areas, and many other hazardous areas covered by these classifications.

A built-in automatic reset thermal limit for over temperature protection. Contactors, where required, will be supplied by customer. Can be operated by a non explosion-resistant thermostat if the stat is in an area remote from the hazardous location.

Element – High quality, long-life finned tubular elements with high grade resistance wire embedded in MGO, centered in a heavy gauge diameter sheath with 1⅛" diameter fins.

Terminal Box – Explosion proof stainless steel terminal box included, with provision for rigid metallic conduit entry and ease of wiring.

Clearance – Must be installed a minimum of 8" from the floor to provide sufficient area for air flow into the bottom of the heater.

HAZARDOUS LOCATION ELECTRIC CONVECTION HEATERS

Voltage	Output BtuH	Wattage	Phase	Amps	Number of Elements	Cabinet Size H x L x D (in.)	QMark Model	Stock No.	List	Each	Shpg. Wt.
T3 Temperature Rating (392° F)											
208	6140	1800	1	8.7	3	23 x 39 x 8	ICG18081A-N	3UG34	$1258.26	**$973.50**	75.0
240	6140	1800	1	7.5	3	23 x 39 x 8	ICG18041A-N	3UG33	1258.26	**973.50**	75.0
T2A Temperature Rating (536° F)											
208	12,280	3600	1	17.4	3	23 x 39 x 8	ICG36081A-N	3UG37	1687.37	**1305.00**	75.0
240	12,280	3600	1	15.0	3	23 x 39 x 8	ICG36041A-N	3UG35	1687.37	**1305.00**	75.0
480	12,280	3600	3	4.4	3	23 x 39 x 8	ICG360483A-N	3UG36	1687.37	**1305.00**	75.0
T2 Temperature Rating (572° F)											
480	25,590	7500	3	9.1	3	23 x 67.5 x 8	ICG750483A-N	3UG38	2587.80	**1981.00**	117.0

NATIONAL ELECTRICAL CODE CLASSIFICATIONS FOR HAZARDOUS LOCATIONS

Abbreviated descriptions of Classes, Groups and Divisions. Before selecting any heater for a particular application, refer to Article 500 of the National Electrical Code (NEC) as well as National Fire Prevention Association and ANSI standards for further information.

Class I

Equipment does not have surface operating temperature in excess of the ignition temperature of the specific gas or vapor.

Class II

Equipment does not have surface temperature greater than the ignition temperature of the specified dust.

Group B

Atmospheres such as but not limited to acrolein (inhibited) (2), arsine, butadiene (1), ethylene oxide (2), hydrogen, manufactured gases containing more than 30% hydrogen (by volume), propylene oxide (2) and propylnitrate.

Group C

Atmospheres such as but not limited to acetaldehyde, allyl alcohol, n-butyraldehyde, carbon monoxide, crotonaldehyde, cyclopropane, diethyl ether, diethylamine, epichlorohydrin, ethylene, ethylenimine, ethyl mercaptan, ethyl sulphide, hydrogen cyanide, hydrogen sulfide, morpholine, 2-nitropropane, tetrahydrofuran and unsymmetrical dimethyl hydrazine.

Group D

Atmospheres such as but not limited to acetone, alcohol, gasoline, lacquer solvent vapors, natural gas, propane or other gases or vapors of equivalent hazard.

Group E

Atmospheres containing combustible metal dust regardless of resistivity, or other combustible dust of similar hazard characteristics having resistivity of less than 105 OHM-Centimeter.

Group F

Atmospheres containing black, charcoal, coal, or coke dust.

Group G

Atmospheres containing combustible dust having resistivity of 105 OHM-Centimeter or greater.

Division I

A location in which ignitable concentrations of flammable material exist under normal operating conditions.

Division II

Locations in which flammable materials will normally be confined within closed containers and escape only in the case of accidental rupture, breakdown or during maintenance operations. Any equipment approved for Division I is automatically also approved for Division II.

Series A3000
Series 43000

Photohelic® Pressure Switch/Gages

Capsu-Photohelic® Pressure Switch/Gages

3-in-One Indicating Gage. Lo-limit and Hi-limit control.

Set points are instantly adjusted with front knobs.

Series A3000 Photohelic® Switch/Gage.

Series 43000 Photohelic® Switch/Gage.

Service Manual (Series 3000)

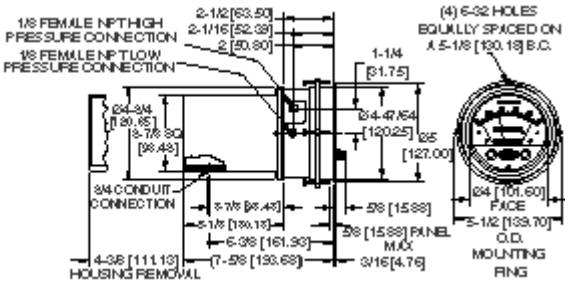

Series A3000 Dimensional Enlargement

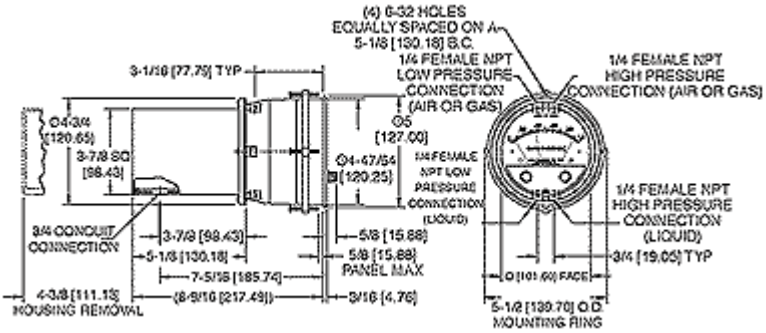

Series 43000 Dimensional Enlargement

Service Manual (Series A3000)
Service Manual (Series 43000)
Catalog Page

Both Photohelic® and Capsu-Photohelic® Switch/Gages function as versatile, highly repeatable pressure switches combined with a precise pressure gage employing the time-proven Magnehelic® design. The lower cost Photohelic® measures and controls positive, negative or differential pressures of air and compatible gases. Standard models are rated to 25 psig (1.7 bar) with options to 35 (2.4) or 80 (5.5 bar) psig. Single pressure 36000S models measure to 6000 psig (413 bar) with a 9000 psig (620 bar) rating. The Capsu-Photohelic® employs an encapsulated sensing element for use with both liquids and gases at pressures to 500 psig (34 bar). Optional cast brass case is available for water or water based liquids. Two phototransistor actuated, DPDT relays are included for low/high limit control. Easy to adjust setpoint indicators are controlled by knobs located on the gage face. Individual setpoint deadband is one pointer width — less than 1% of full scale. Setpoints can be interlocked to provide variable deadband — ideal for control of fans, dampers, pumps, etc. Gage reading is continuous and unaffected by switch operation, even during loss of electrical power. Choose from full scale pressure ranges from a low 0-.25" (0-6 mm) w.c. up to 300 psi (21 bar); single positive pressure to 6000 psig (413 bar).

Two phototransistor actuated, DPDT relays are included for low/high limit control. Easy to adjust setpoint indicators are controlled by knobs located on gage face. Individual setpoint deadband is one pointer width - less than 1% of full scale. Setpoints can be interlocked to provide variable deadband - ideal for control of fans, dampers, pumps, etc. Gage reading is continuous and unaffected by switch operation, even during loss of electrical power. Choose from full scale pressure ranges from a low 0-.25" w.c. up to 300 psi; single positive pressure to 6000 psig.

PHOTOHELIC SENSING - HOW IT WORKS

In typical applications, these Dwyer switch/gages control between high and low pressure set points. When pressure changes, reaching either set point pressure, the infrared light to the limiting phototransistor is cut off by

SPECIFICATIONS

GAGE SPECIFICATIONS

Service: Air and non-combustible, compatible gases.
Wetted Materials: Consult Factory.
Accuracy: Photohelic®, ±2% of full scale at 70°F (21.1°C). ±3% on -0 and ±4% on -00 models. Capsu-Photohelic® ± 3% of full scale at 70°F (21.1°C). ±2% on 43000S models; ±4% on 43215, 43220 and 43500.
Pressure Limits: Photohelic® -20" Hg. to 25 psig (-0.677 to 1.72 bar). MP option; 35 psig (2.41 bar), HP option; 80 psig (5.52 bar). 36003S – 36010S; 150 psig (10.34 bar). 36020S and higher;1.2 x full scale pressure. Capsu-Photohelic®, -20Hg. To 500 psig (-0.677 to 34.5 bar).
Temperature Limits: 20 to 120°F. (-6.67 to 48.9°C) Low temperature option available.
Process Connections: Photohelic®, 1/8" female NPT. Capsu-Photohelic® 1/4" female NPT.
Size: Photohelic®, 4" (101.6 mm) dial face, 5" (127 mm) O.D. x 8-1/4" (209.55 mm). Capsu-Photohelic®, 4" (101.6 mm) dial face, 5" (127 mm) O.D. x 9-3/16" (233.36 mm).
Weight: Photohelic®, 4 lbs. (1.81 kg). Capsu-Photohelic® 5 lbs., 8 oz. (2.49 kg). Capsu-Photohelic® Brass 11 lbs., 2 oz. (5.05 kg).

SWITCH SPECIFICATIONS

Switch Type: Each setpoint has 2 Form C relays (DPDT).
Repeatability: ±1% of full scale.
Electrical Rating: Photohelic®, 10A @ 28 VDC, 10A @ 120, 240 VAC; Capsu-Photohelic® 10A @ 120 VAC, 6A @ 240 VAC, 60 Hz res. 10A @ 28 VDC.
Electrical Connections: Screw Terminals.
Power Requirements: 120 VAC, 50/60 Hz; 240 VAC & 24 VAC Power optional.
Mounting Orientation: Diaphragm in vertical position. Consult factory for other position orientations.
Set Point Adjustment: Adjustable knobs on face.
Agency Approvals: Photohelic® UL, CSA, CE.

the helix-driven light shutter. The resulting phototransistor signal is electronically amplified to actuate its DPDT slave relay and switching occurs. Dead band between make and break is 1% of full scale or less - just enough to assure positive, chatter-free operation.

RELAY-TRANSFORMER FEATURES

A plastic housing protects all electronic components. Solid-state and integrated circuit electronics are on glass-epoxy printed circuit boards and self-extinguishing terminal boards (for the Series A3000 only).

APPLICATIONS - PHOTOHELIC SWITCH/GAGES

In both series of pressure switch/gages, you get the convenience of a visual indication plus high-low limit switching. For both OEM and in-plant applications, the Photohelic® switch/gage is used to control pressures in air conditioning systems, clean rooms, fluidic and pneumatic control systems, materials handling equipment, alarm or control fume exhaust systems, control pressure in air structures, and monitor respiratory and blood pressures.

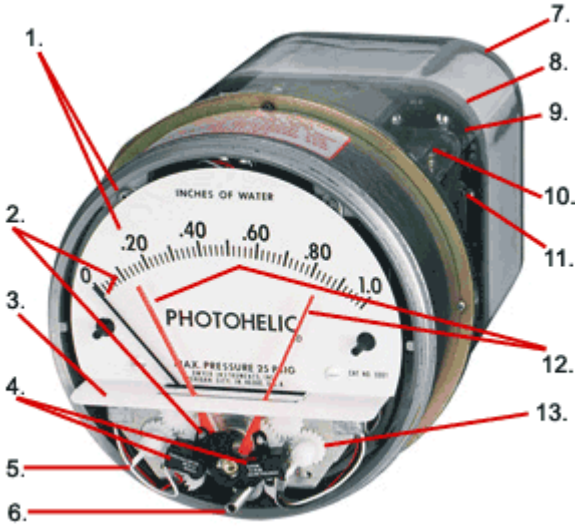

Patent No. 3,862,412

STANDARD MODEL

Two phototransistor-actuated circuits and two DPDT relays permit both high and low alarms or limit controls. Relays are de-energized when gage pointer is to the left of respective set points; relays are energized as pointer passes to the right of set points. Loss of electrical power or loss of pressure provide "fail safe" protection.

OPTIONS -- Consult Factory for Pricing

-SR Single contact, right set point, for actuation on increasing or decreasing pressure.
-OEM OEM Model, less relay and transformer components and housing but including phototransistor(s), light shutter and set pointer(s). For single or double contact.
-RMR Remote-Mounted Relay, relay pack may be mounted remotely from gage. Specify cable length required.
-TAMP Tamper-proof knobs, low temperature option, special scales, voltages and other features and modifications are available.
Special Housings available include Weatherproof (NEMA 4X) and Explosion-proof (NEMA 7 & 9; NEC Cl I, Gr C&D; Cl II, Gr E, F&G; Cl III). Contact Customer Service for detailed dimension drawings.
HIGH AND LOW LATCHING CIRCUITS
Dwyer Photohelic switch/gages can be wired for **high-latching**, **low-latching** or combination **high-low latching** circuits. That is, the equipment will hold in these respective positions once activated and until manually reset. Particularly useful for alarm and signal applications where control is accomplished by another Photohelic switch/gage or other means. Complete wiring and operational instructions are included. Where manual reset is required a dry circuit push button such as Dwyer Part A-601 should be used.

Check these features for dependable control

1. **Bezel and front cover** point knobs and zero adjustment screw) removed to expose Photohelic® set point mechanism.Cover is clear polycarbonate plastic.
2. **Gage pointer and light shutter** are mounted on helix and balancing counterweight. Shutter passes through slot in optical limit switch to expose phototransistors to integral infrared light source or mask them depending on applied pressure
3. **Light shield** effectively protects phototransistors from strong outside light sources yet allows free pointer movement. It also gives interior a clean "finished" look.
4. **Optical limit switches** are used for reliability and long service life. Attached directly to set pointers, they are individually aligned to assure precise switching accuracy.

5. **Semi-Flexible drive shaft** connects to set point knobs.
6. **Zero adjustment screw** connects to screw in cover.
7. **Styrene acrylonitrile enclosure** protects electronic components and electrical connections.
8. **Polycarbonate connection** or terminal board is self-extinguishing.(A3000 only)
9. **Glass epoxy printed circuit boards** best for durability and permanence.
10. **Load relays** are DPDT with latching feature for maximum application versatility.
11. **Electronics** are designed to operate on 50/60 Hz, 120 volt current with 10% over or under voltage. Special units for other voltages are available.
12. **Switch set pointers** show switch settings at all times.
13. **Spring loaded friction** clutch prevents operator damage of set point mechanism.

MODELS AND RANGES - SERIES A3000 PHOTOHELIC® AND SERIES 43000 CAPSU-PHOTOHELIC® SWITCH/GAGES

NOTES: Photohelic® model numbers listed below are UL/CSA listed. **Capsu-Photohelic®** units are **not** UL/CSA Listed. Except where noted, **Photohelic®** ranges are available as unlisted **Capsu-Photohelic®** switch/gages by replacing the "A" prefix in the model number with a "4". Thus an A3001 Photohelic® is a 43001 in the **Capsu-Photohelic®** version. Consult factory for other 43000 ranges and prices.

Photohelic® models below are **UL/CSA** listed. For non UL/CSA listed **Photohelic®** models delete the "A" prefix from the model number shown*. Examples: 3000-0 or 3001. Increases prices $11.00 from price shown. Special models can be built to OEM customers' specifications with scales reading in special pressure units like ounces per square inch, inches of mercury, etc. Custom logos and special graduations can also be included. Contact factory for minimum quantities and pricing.
*** NOTE: Non UL/CSA units will be charged an additional $11.00**

Choose a different selection (if desired), then press the ' **Display the product...**' button.

Series A3000 Photohelic Pressure Switch/Gages - Range, In of W.C.

Display the product I have selected

STOCKED MODELS

Model Number	Range, Inches w.c.	Note	Price
A3000-00	0-.25	Available only on Photohelic	$232.00*Std
A3000-0	0-.50		$221.00*Std
A3001	0-1.0		$221.00*Std
A3002	0-2.0		$221.00*Std
A3003	0-3.0		$221.00*Std
A3004	0-4.0		$221.00*Std
A3005	0-5.0		$221.00*Std
	0-6.0		$221.00*Std

A3006			
A3008	0-8.0		$221.00*Std
A3010	0-10		$221.00*Std
A3015	0-15		$221.00*Std
A3020	0-20		$221.00*Std
A3025	0-25		$221.00*Std
A3030	0-30		$221.00*Std
A3040	0-40		$221.00*Std
A3050	0-50		$221.00*Std
A3060	0-60		$221.00*Std
A3080	0-80		$221.00*Std
A3100	0-100		$221.00*Std
A3150	0-150		$221.00*Std

***Prices are based in US currency and may change for international customers due to and not limited to customs brokerage fees, export packing and documentation, tariffs, duty and taxes.**

Click the **Model Number** of the item to add the item to your shopping cart.

ACCESSORIES

Model Number	Description	Price
A-601	Manual reset switch	$21.00*Std

***Prices are based in US currency and may change for international customers due to and not limited to customs brokerage fees, export packing and documentation, tariffs, duty and taxes.**

Click the **Model Number** of the item to add the item to your shopping cart.

VIEW YOUR SHOPPING CART

© Copyright 2003 Dwyer Instruments, Inc. All rights reserved.

Hoffman®
A Pentair Company

CONCEPT® Wall-Mount Enclosures

Application

CONCEPT® enclosures house and protect your sensitive electrical or electronic components from harsh, dirty environments. For use in installations where dirt, dust, oil, water, or other contaminants are present. Streamlined styling, flush latching, and an attractive durable finish complement other electronic equipment.

Construction

- 16 or 14 gauge steel (see tables)
- Seams continuously welded and ground smooth
- Minimum width body flange provides maximum door opening (210°)
- Body flange trough excludes liquids and contaminants
- Panel mounting studs fit optional CONCEPT® panels and other accessories
- Mounting holes in back of body for direct mounting or for optional external wall-mounting brackets
- Hidden hinges for clean aesthetic appearance
- Doors are interchangeable and easily removable by pulling captive hinge pins
- Seamless foam-in-place gasket provides oil-tight and dust-tight seal against contaminants
- Optional handles and inserts available
- Self-grounding latch system with double seal provides maximum protection against leakage
- Integral body grounding stud
- Provision for thermoplastic data pocket on solid door styles (right door on two-door models)
- Provision for optional door stop kit on solid door styles
- Furnished hardware kit consists of panel mounting nuts, panel grounding hardware, and sealing washers for wall mounting holes
- Installation instructions for enclosure and accessories are provided

CONCEPT® single-door enclosures with solid door

- Door bar on hinge side for wire management and bonding
- Additional door bar on larger doors for extra rigidity
- Patented quarter-turn latches or a 3-point latch system on larger enclosures, furnished with flush slotted insert. Optional handles or inserts are available.

CONCEPT® single-door enclosures with window

- Clear polycarbonate window is flush with door surface
- Quarter-turn latch(es) with flush slotted insert.

CONCEPT® flush-mount enclosures

- Mounting frame extends completely around enclosure
- Quarter-turn latch(es) with slotted insert.

CONCEPT® two-door enclosures

- Patented overlapping door design provides full-width access
- Door bars on each door for wire management and bonding
- 3-point latch system on right door furnished with flush slotted insert

Finish

Two standard finishes are available over phosphatized surfaces: ANSI 61 gray polyester powder paint inside and out, or RAL 7035 textured light gray polyester powder paint inside and out. Optional panels are white.

Industry Standards

Wall-mounting brackets required to maintain UL/CSA external mounting requirement.

- CONCEPT® solid single-door and flush-mount models
  UL 508A, 508, File No. E61997: Type 4 and Type 12
  NEMA/EEMAC Type 4, Type 12, and Type 13
  CSA, File No. LR42186, Type 4 and Type 12
  VDE IP66
  IEC 60529, IP66

- CONCEPT® single-door models with window
  UL 508A, 508, File No. E61997: Type 4 and Type 12
  NEMA/EEMAC Type 4 and Type 12
  CSA, File No. LR42186, Type 4 and Type 12
  VDE IP66
  IEC 60529, IP66

- CONCEPT® two-door models
  UL 508A, 508, File No. E61997: Type 12
  NEMA/EEMAC Type 12
  CSA, File No. LR42186, Type 12
  VDE IP55
  IEC 60529, IP55

Accessories

See Chapter 12, General Accessories: CONCEPT® Enclosure Accessories

Adjustable Mounting Kit
Corrosion Inhibitors
Data Pocket (except window door style)
Dead Front Kit
DIN3 Rail Kit
Door Stop Kit (except window door style)
Electric Heater
Fan Cooling Products
Grid Straps
Handles and Latches
Key Inserts
Lighting Kits
Mounting Channels
Panel Conversion Kit
Panels (see tables)
Panels, NEMA
Pole Mounting Kit
Rack Mounting Angles
Swing-Out Panel Kit
Swing-Out Rack Frames
Terminal Block Kit Assembly
Touch-Up-Paint (ATPPY61 for ANSI 61 or ATPG7035 for RAL 7035)
Wall-Mounting Bracket Kit
Wiring Duct

Modification Services Program

You can customize this product to your unique requirements by specifying from these options:

- Enclosure height, width, depth (not available on window door enclosures)
- Over 100 standard finish colors and textures
- Holes and cutouts in body, doors, subpanels
- Tapped holes, fasteners in enclosure or subpanel
- Doors
- Subpanels
- Structural changes
- Environmental control (louvers, fans, filters)
- Windows (not available on window door enclosures)
- Standard accessories

For details, see Modification Services at www.hoffmanonline.com.
To order, contact your local Hoffman sales representative.

NOTE: For information about modifications outside the scope of the Modification Services program, contact your Hoffman sales representative.

Patents:
Cabinet with Overlapping Double Doors 5,465,528 (U.S.)
Combined Handle and Lock Unit
D360,345 (U.S.)
DEM 9405854.7 (Germany)
Enclosure Latch 5,509,703 (U.S.)
Hinge System 5,666,695 (U.S.)
EN 0729541 (Europe)

Other patents pending.

 ©2003 Hoffman Enclosures Inc.

The CONCEPT® Enclosure Group Accessory Selection Guide

See Chapter 12, General Accessories: CONCEPT® Enclosure Accessories

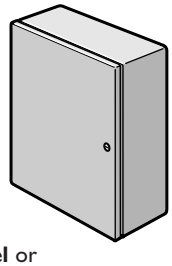

Steel or Stainless Steel **Enclosures**

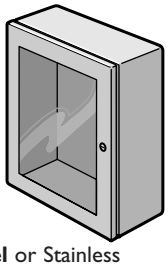

Steel or Stainless Steel **Window-Door Enclosures**

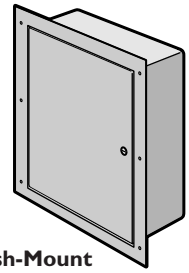

Flush-Mount Enclosures

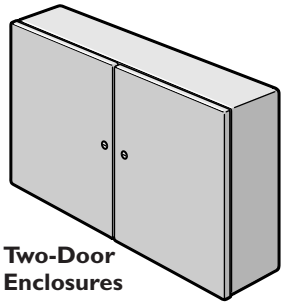

Two-Door Enclosures

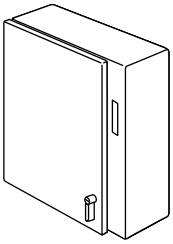

Steel or Stainless Steel Disconnect Enclosures

Internal Accessories

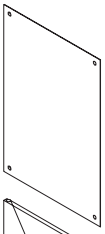

Steel Panels

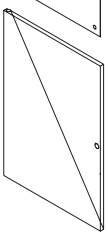

Swing-Out Panels

NEMA Panel Conversion Kit

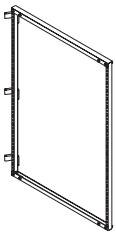

Swing-Out Rack Frames for 19" Rack Mount Equipment

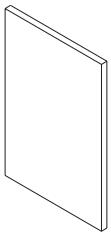

Dead Front Kits

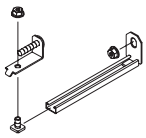

Adjustable Depth Panel Mounting Kits

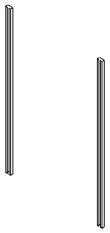

Accessory Mounting Channels

DIN3 Rail Kits

Grid Straps

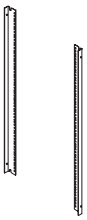

Rack Mounting Angles for 19" Rack Mount Equipment

Door Accessories

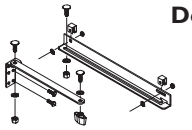

Door Stop Kit

Data Pockets

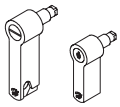

Handles and Latches

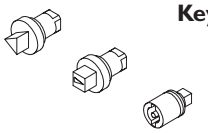

Key Inserts

External Accessories

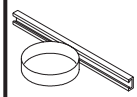

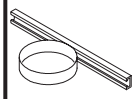

Pole Mounting Kits

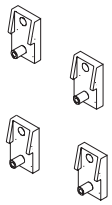

Wall-Mounting Bracket Kit

C2588-1

 ©2003 Hoffman Enclosures Inc.

General Accessories
Electrical Interlocks

AEK____NDH

AEK____

Electrical Interlocks

Provide positive internal safety lockout on electrical enclosures while the equipment is energized.

Catalog numbers AEK115, AEK230, and AEK460 are designed to be used with standard Hoffman door latching mechanisms. When energized, these interlocks will prevent the door handle from being turned to open the door. They are designed to fit either clockwise or counterclockwise handles in the following enclosures:

1. All two-door Type 12 enclosures
2. Free-standing Type 12 enclosures
3. All single-door Type 12 enclosures which have latch kits installed

The above interlocks will fit the following enclosures, but modifications are required. Consult the factory for more information.

1. Two-door Type 12 enclosures for flange-mounted disconnects
2. Heavy duty free-standing Type 12 enclosures for flange-mounted disconnects
3. Modular Type 12 enclosures for flange-mounted disconnects
4. Multi-door Type 12 enclosures

The above interlocks will also fit most Hoffman custom enclosures which have door latching mechanisms similar to the mechanisms used on the preceding enclosures. They will not fit CONCEPT® enclosures.

Interlocks are not designed to be used in place of the standard door or cover latch.

Catalog numbers AEK115NDH, AEK230NDH, and AEK460NDH are designed to be used on some Hoffman enclosures and boxes which have exterior latching only. When energized, these interlocks will prevent the enclosure door from being opened. They will fit on the door or cover of the following enclosures:

1. Single-door Type 4 and 4X enclosures
2. Two-door Type 4 and 4X enclosures
3. Single-door Type 12 enclosures
4. Larger sizes of CH, CHS, CHNF, CHNFSS, and CHAL junction boxes
5. Type 1 and large Type 1 enclosures

The above interlocks will also fit in most Hoffman custom enclosures and boxes which have doors or covers hinged similar to doors or covers on the preceding enclosures.

Construction

Rugged steel construction and plated finish. Solenoids are rated for continuous duty and will stand up under heavy industrial use.

Packaged complete with a solenoid assembly, strike plate or bracket, and instructions for field installation. *Handles and latching mechanisms are not included.*

Industry Standards

UL Component Recognized (see table)
CSA certified (see table)

Installation

AEK115, AEK230 and AEK460 mount on the inside of the enclosure door using the same screws which hold the door handle in place. The strike plate attaches to the existing latch assembly. AEK115NDH, AEK230NDH and AEK460NDH require drilling several holes in the cover and body for mounting.

Defeater

Electrical Interlock Defeater

Enables authorized personnel to enter an enclosure while the enclosure contents are energized. Defeater is a key-operated momentary contact switch with contacts normally closed. Turning the key disengages the circuit to the electrical interlock. Can be used with all 115 volt Hoffman electrical interlocks. A relay must be used in conjunction with switch for 240 volt and 480 volt applications.

Catalog Number	Description	Volts/Hz	Amps Normal/In Rush	Volts/Hz	Amps Normal/In Rush
AEK115[a]	Electrical interlock	120/60	.100/.63	110/50	.120/.69
AEK230[a]	Electrical interlock	240/60	.050/.32	220/50	.060/.35
AEK460[a]	Electrical interlock	480/60	.025/.16	440/50	.030/.18
AEK115NDH[a]	Electrical interlock	120/60	.100/.63	110/50	.120/.69
AEK230NDH[a]	Electrical interlock	240/60	.050/.32	220/50	.060/.35
AEK460NDH[a]	Electrical interlock	480/60	.025/.16	440/50	.030/.18
AEKDF	Electrical interlock defeater	120/60	10 Max.	120/50	10 Max.

[a] Component Recognized by Underwriters Laboratories Inc. and CSA certified.

 ©2003 Hoffman Enclosures Inc.

AEK___Style

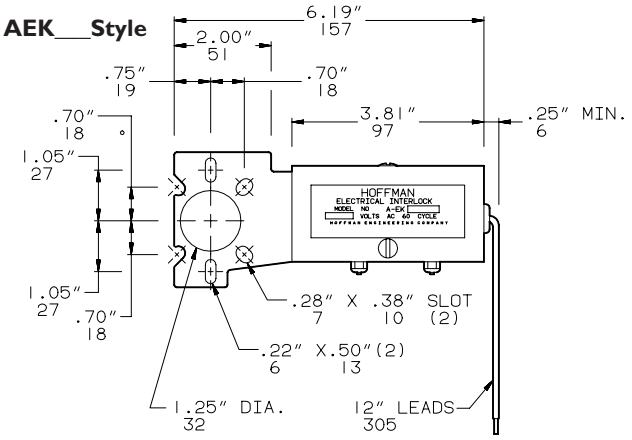

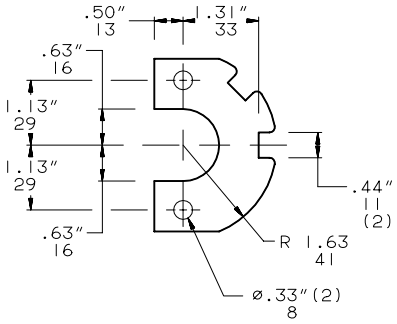

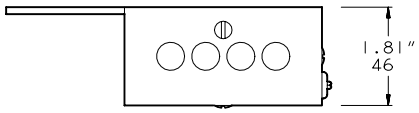

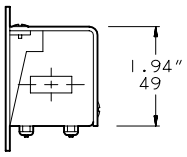

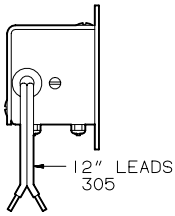

AEK___NDH Style

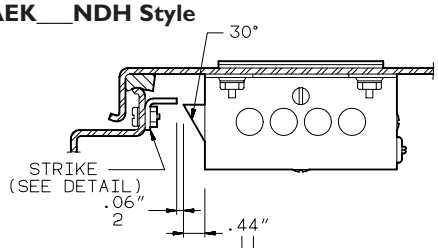

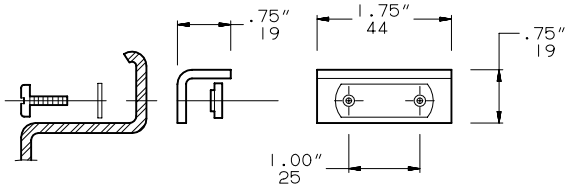

Strike Detail

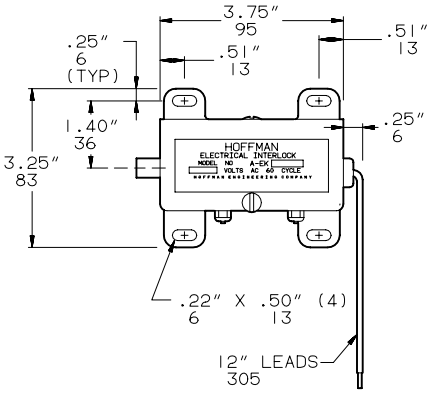

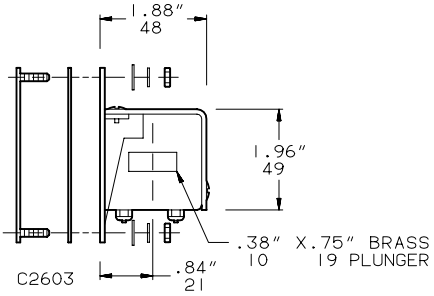

 ©2003 Hoffman Enclosures Inc.

QO® Load Centers and Circuit Breakers

Unsurpassed circuit protection and application flexibility

a brand of Schneider Electric

SQUARE D

Square D® is the leader in circuit protection, a reputation QO® Load Centers helped to build. The widest range of application solutions. Superior reliability and durability. Exclusive performance innovations such as fast-acting Qwik-Open® protection and Visi-Trip® indication. Advanced technologies offering ground fault circuit interruption, arc fault circuit interruption and surge protection. Installation-simplifying innovations.

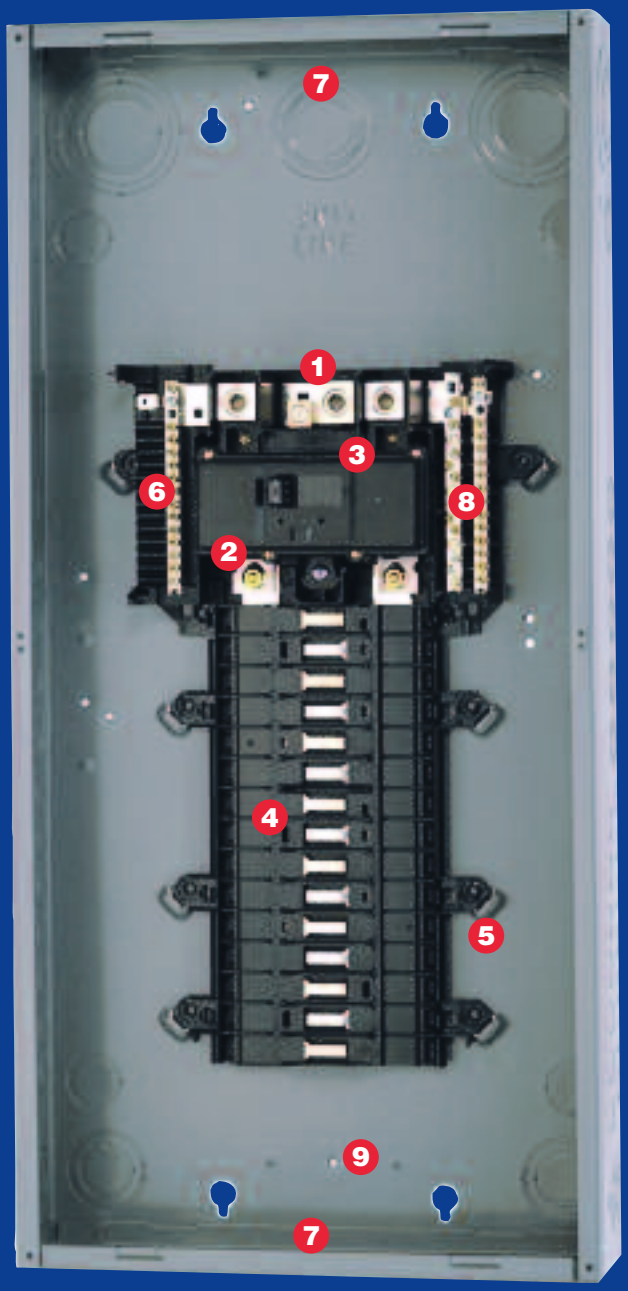

Main Breaker Load Center

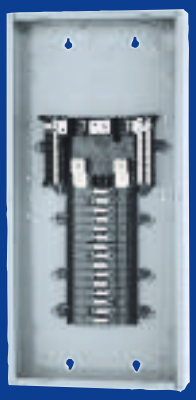

Main Lugs Load Center

Note: Not all features apply to all units.

QO Load Center Features

1. Straight-in wiring design helps minimize service cable bends, cutting waste and saving installation time.
2. Convertible mains let you meet changing job site requirements fast by field converting between main breaker and main lugs.
3. Standard 22,000/10,000 ampere series short circuit current rating on main breaker panels provides increased application capability without the time and expense of changing out the complete panel. Three-phase QO Main Circuit Breaker panels can be upgraded to 100,000A short circuit current rating.
4. Shielded copper bus is an industry exclusive. We've sandwiched our plated copper bus between two rugged polymer shields to insulate and secure the interior in the box. The new design reduces the chance of accidental contact, and still accepts standard

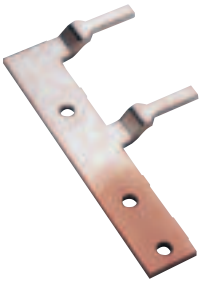

QO Circuit Breakers. The bus is crafted from a single piece of copper to provide excellent conductivity. The copper bus is then plated to help prevent corrosion and ensure superior performance and durability.

5. Interior is easily removed for painting or theft protection. Single, captive screw can't be lost; interior remounts quickly and easily (indoor only).
6. Split branch neutral with up to 50% more terminations than required reduces clutter and simplifies wiring. Included are three 1/0 AWG terminations to accommodate larger wire without the expense and hassle of separate lugs.
7. Top or bottom feed capability lets you rotate enclosure 180° to accommodate top or bottom feed, saving expensive service cable. Covers include provisions for a door lock and have the top two branch circuit twistouts removed to speed installation.

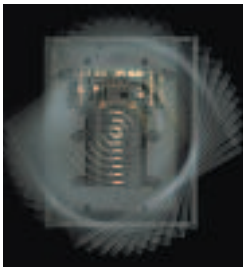

8. Combination slot/square-drive neutral, ground, and cover screws let you use either standard flat-blade screwdriver or square-head driver for positive drive and improved torque.
9. Three ground bar mounting locations (left, right and bottom) let you pick the easiest spot to wire. Ground bars are included with most main lugs load centers.
10. Automatic flush adjustment cover speeds installation, especially on uneven wall surfaces (below).

We've Got You Covered: Flush and Surface Covers

Indoor QO covers are available in flush or surface configurations to meet any mounting situation. All covers feature a floating, spring-mounted trim which provides automatic flush adjustment. This ensures proper alignment without manual adjustment and speeds final installation.

Rainproof Enclosures

QO Load Centers are available in a full line of NEMA Type 3R rainproof enclosures, with Square D type rain-tight bolted (RB) hub for fast and convenient top feed conduit connection. Side-opening devices feature a stainless steel door latch and rainproof center mounting boss on back.

Complete Line of Accessories

A complete line of QO accessories maximizes application flexibility. From ground bar kits to bolt-on rainproof hubs, filler plates, door locks, manual transfer kits, and more, QO Load Centers can satisfy almost any residential, commercial or industrial installation requirement.

QO Arc-D-tect® Arc Fault Circuit Interrupter

Utilizing advanced technology, the exclusive Square D Arc-D-tect Arc Fault Circuit Interrupter provides the highest level of circuit protection available today – designed to detect dangerous arc faults as well as provide traditional overload and short circuit protection. This single-pole breaker installs as easily as our GFCI breaker.

For most people, the home is an investment of a lifetime. It's no place to compromise on electrical protection. That's why nearly 40 years ago QO® Load Centers and Circuit Breakers changed the way homes were protected...replacing fuses with the convenience and safety of modern circuit breakers. Today, Square D® Load Centers are the most preferred brand of builders and electrical contractors.

QO Circuit Breaker and Surgebreaker® Features

Unsurpassed Qwik-Open® Protection

QO Circuit Breakers provide the high level of protection you expect from Square D. Single-pole 15A and 20A Qwik-Open Circuit Breakers trip within 1/60th of a second. When it comes to electrical protection, fast response is critical and QO Circuit Breakers can trip faster than the blink of an eye.

Visi-Trip®

The exclusive Visi-Trip indicator provides clear and instant identification of a tripped circuit breaker. The highly visible indicator helps prevent unnecessary service calls and reduces the chance that other circuits will be turned off accidentally.

Ground Fault Protection

Square D introduced the first ground fault circuit interrupter (GFCI) in 1967. It was such a good idea, electrical codes now require ground fault protection for bathrooms, pools, spas and other applications. We've continued that leadership, expanding our offering through two-pole 60A circuit breakers for whirlpool and hot tub applications.

Surgebreaker Secondary Surge Arrester

The Surgebreaker Secondary Surge Arrester plugs on like a circuit breaker to help protect the home's electrical system and hardwired appliances from surges up to 20,000 volts. Downstream point-of-use surge suppressors normally only handle surges up to 6,000 volts, and only protect the products plugged directly into them. For complete protection of sensitive electronics like computers, you need both levels of protection.

Surgebreaker Plus Multi-Path Surge Arrester

The latest innovation in surge protection from Square D, the Surgebreaker Plus, provides whole house protection for up to four telephone lines, two coax cable lines and is hard-wired to protect the entire panel and home wiring.

USE CIRCUIT BREAKERS PROPERLY

Electrical protection requires that circuit breakers be used properly. To maintain the integrity and safety intended, install only breakers marked on the load center label and/or wiring diagram. QO Load Centers are marked to accept only genuine QO Circuit Breakers. QO Circuit Breakers should only be used in panels marked to accept them. Any other use voids your warranty and may reduce protection, increase liability risks and violate the National Electrical Code.

QO® Load Centers, QO® Circuit Breakers and Sur

SINGLE PHASE LOAD CENTERS – INDOOR MAIN LUGS

Mains Rating	Branch Spaces	Max Branch Circuits	Load Center Catalog Number	Cover Cat. No. F=Flush S=Surface	Ground Bar
30	2	2	QO2L30S	Included	PK3GTA-1
70	2	4	QO24L70 (F/S)		PK4GTA
100	6	12	QO612L100 (F/S)		PK7GTA
	6	12	QO612L100D (F/S)		
	8	16	QO816L100 (F/S)		
	8	16	QO816L100D (F/S)		
	6	12	QO612L100D (F/S) CU		
	8	16	QO816L100D (F/S) CU		
125	4	8	QO148L125G (F/S)		Included
Convertible Main Lugs					
125	12	12	QO112L125G	QOC16U (F/S)	Included
	12	24	QO11224L125G	QOC16U (F/S)	
	16	16	QO116L125G	QOC24U (F/S)	
	16	24	QO11624L125G	QOC24U (F/S)	
	20	20	QO120L125G	QOC24U (F/S)	
	20	24	QO12024L125G	QOC24U (F/S)	
	24	24	QO124L125G	QOC24U (F/S)	
	32	32	QO132L125G	QOC32U (F/S)	
150	20	30	QO12030L150G	QOC30U (F/S)	Included
	24	24	QO124L150G	QOC30U (F/S)	
	30	30	QO130L150G	QOC30U (F/S)	
200	12	12	QO112L200G	QOC30U (F/S)	Included
	24	36	QO12436L200TFT	QOC40U (F/S)	
	30	30	QO130L200G	QOC30U (F/S)	
	30	40	QO13040L200G	QOC30U (F/S)	
	40	40	QO140L200G	QOC40U (F/S)	
225	42	42	QO142L225G	QOC42U (F/S)	Included

SINGLE PHASE LOAD CENTERS – OUTDOOR MAIN LUGS

Mains Rating	Branch Spaces	Max Branch Circuits	Load Center Catalog Number	Ground Bar
Fixed Main Lugs				
40	2	2	QO2L40RB	PK3GTA1
70	2	4	QO24L70RB	PK4GTA
100	6	12	QO612L100RB	PK7GTA
	6	12	QO612L100TRB	Included
	6	12	QO612L100RBCU	PK7GTA
	8	16	QO816L100RB	
	8	16	QO816L100RBCU	
125	4	8	QO148L125GRB	Included
Convertible Main Lugs				
125	12	12	QO112L125GRB	Included
	12	24	QO11224L125GRB	
	16	24	QO11624L125GRB	
	24	24	QO124L125GRB	
150	30	30	QO130L150GRB	
200	12	12	QO112L200GRB	
	30	30	QO130L200GRB	
	30	40	QO13040L200GRB	
	40	40	QO140L200GRB	
225	42	42	QO142L225GRB	

SINGLE PHASE LOAD CENTERS – INDOOR CONVERTIBLE MAIN BREAKER

Mains Rating	Branch Spaces	Max Branch Circuits	Load Center Catalog Number	Cover Cat. No. F=Flush S=Surface	Ground Bar
100	12	12	QO112M100	QOC12U (F/S)	PK9GTA
	16	16	QO116M100	QOC20U100 (F/S)	PK12GTA
	20	20	QO120M100	QOC20U100 (F/S)	PK15GTA
	24	24	QO124M100	QOC24U (F/S)	PK15GTA
	32	32	QO132M100	QOC32UF	PK18GTA
125	24	24	QO124M125	QOC24U (F/S)	PK15GTA
	32	32	QO132M125	QOC32UF	PK18GTA
150	20	30	QO12030M150	QOC30U (F/S)	PK18GTA
	24	24	QO124M150	QOC30U (F/S)	PK15GTA
	30	30	QO130M150	QOC30U (F/S)	PK18GTA
	32	32	QO132M150	QOC40U (F/S)	PK18GTA
200	20	40	QO12040M200	QOC30U (F/S)	PK23GTA
	24	24	QO124M200	QOC30U (F/S)	PK15GTA
	30	30	QO130M200	QOC30U (F/S)	PK18GTA
	30	40	QO13040M200	QOC30U (F/S)	PK23GTA
	40	40	QO140M200	QOC40U (F/S)	PK23GTA
	42	42	QO142M200	QOC42U (F/S)	PK23GTA
225	40	40	QO140M225	QOC42U (F/S)	PK23GTA
	42	42	QO142M225	QOC42U (F/S)	PK23GTA

SINGLE PHASE LOAD CENTERS – OUTDOOR MAIN BREAKER

Mains Rating	Branch Spaces	Max Branch Circuits	Load Center Catalog Number	Ground Bar
Main Breaker				
100	12	12	QO112M100RB	PK9GTA
	16	16	QO116M100RB	PK12GTA
	20	20	QO120M100RB	PK15GTA
125	24	24	QO124M125RB	PK18GTA
150	20	30	QO12030M150RB	
	30	30	QO130M150RB	
200	20	40	QO12040M200RB	PK23GTA
	30	30	QO130M200RB	PK18GTA
	40	40	QO140M200RB	PK23GTA
Feed Thru Lugs				
125	6	12	QO1612M125FTRB	PK12GTA
150	8	16	QO1816M150FTRB	PK15GTAL
200	8	16	QO1816M200FTRB	

MAIN CIRCUIT BREAKER KITS

Main Circuit Breaker Rating (A)	Use With Convertible Load Center Mains Rating	22,000 AIR Main Circuit Breaker	Lug Wire Size AWG/kcmil Al or Cu
QOM1 Frame Size			
50	100–125	QOM50VH	#12–2/0
60	100–125	QOM60VH	
70	100–125	QOM70VH	
80	100–125	QOM80VH	
90	100–125	QOM90VH	
100	100–125	QOM100VH	
110	125	QOM110VH	
125	125	QOM125VH	
QOM2 Frame Size			
100	150–225	QOM2100VH	#4–300
125	150–225	QOM2125VH	
150	150–225	QOM2150VH	
175	200–225	QOM2175VH	
200	200–225	QOM2200VH	
225	225	QOM2225VH	

gebreaker® Products

THREE PHASE LOAD CENTERS – OUTDOOR

Mains Rating	Branch Spaces	Load Center Catalog Number	Ground Bar
Fixed Main Lugs, 65,000A Short Circuit Current Rating			
60	3	QO403L60NRB	P4GTA
125	12	QO312L125GRB	Included
	20	QO320L125GRB	
200	18	QO318L200GRB	
	30	QO330L200GRB	
225	42	QO342L225GRB	
Convertible Main Breaker, QO3100VH 22,000A Short Current Rating			
100	27	QO327M100RB	PK15GTA
Convertible Main Breaker, QD, 25,000A Short Circuit Current Rating			
125	30	QO330MQ125RB	PK18GTA
150	30	QO330MQ150RB	
200	30	QO330MQ200RB	
	42	QO342MQ200RB	PK23GTA
225	42	QO342MQ225RB	

THREE PHASE LOAD CENTERS – INDOOR

Mains Rating	Branch Spaces	Load Center Catalog Number	Cover Cat. No. F=Flush S=Surface	Ground Bar
Fixed Main Lugs, 65,000A Short Circuit Current Rating				
60	3	QO403L60N (F/S)	Included	PK4GTA
125	12	QO312L125G	QOC16U (F/S)	Included
	20	QO320L125G	QOC24U (F/S)	
	24	QO324L125G	QOC24U (F/S)	
200	18	QO318L200G	QOC30U (F/S)	
	30	QO330L200G	QOC30U (F/S)	
225	42	QO342L225G	QOC42U (F/S)	
Convertible Main Breaker, QO3100VH 22,000A Short Current Rating				
100	27	QO327M100	QOC30U (F/S)	PK15GTA
Convertible Main Breaker, QD 25,000 Short Circuit Current Rating				
125	30	QO330MQ125	QOC342Q (F/S)	PK18GTA
150	30	QO330MQ150		PK18GTA
	42	QO342MQ150		PK23GTA
200	30	QO330MQ200		PK18GTA
	42	QO342MQ200		PK23GTA
225	42	QO342MQ225		PK23GTA

BRANCH CIRCUIT BREAKERS 10,000 AIR

Ampere Rating	One Pole	Two Pole Common Trip	Three Pole Common Trip
10	QO110	QO210	QO310
15	QO115	QO215	QO315
20	QO120	QO220	QO320
25	QO125	QO225	QO325
30	QO130	QO230	QO330
35	QO135	QO235	QO335
40	QO140	QO240	QO340
45	QO145	QO245	QO345
50	QO150	QO250	QO350
60	QO160	QO260	QO360
70	QO170	QO270	QO370
80		QO280	QO380
90		QO290	QO390
100		QO2100	QO3100
110		QO2110	
125		QO2125	
150		QO2150	
175		QO2175	
200		QO2200	

THREE PHASE MAIN CIRCUIT BREAKERS

Amperage	25k AIR	65k AIR	100k AIR
70	QDL32070	QGL32070	QJL32070
80	QDL32080	QGL32080	QJL32080
90	QDL32090	QGL32090	QJL32090
100	QDL32100	QGL32100	QJL32100
110	QDL32110	QGL32110	QJL32110
125	QDL32125	QGL32125	QJL32125
150	QDL32150	QGL32150	QJL32150
175	QDL32175	QGL32175	QJL32175
200	QDL32200	QGL32200	QJL32200
225	QDL32225	QGL32225	QJL32225

TANDEM CIRCUIT BREAKERS

Ampere Rating	QOT One Pole	Replacement for Non-Class CTL One Pole
15 & 15	QOT1515	QO1515
15 & 20	QOT1520	QO1520
20 & 20	QOT2020	QO2020

GROUND FAULT CIRCUIT INTERRUPTERS 10,000 AIR

Ampere Rating	One Pole	Two Pole	Three Pole
15	QO115GFI	QO215GFI	
20	QO120GFI	QO220GFI	
25	QO125GFI	QO225GFI	
30	QO130GFI	QO230GFI	
40		QO240GFI	
50		QO250GFI	
60		QO260GFI	

For bolt-on breakers, change QO to QOB

ARC FAULT CIRCUIT INTERRUPTERS 10,000 AIR

Ampere Rating	One Pole
15	QO115AFI
20	QO120AFI

SURGEBREAKER® SECONDARY SURGE ARRESTER

Catalog Number	Clamping Voltage at Surge Currents of:		
	1,500A	5,000A	10,000A
QO2175SB	500V	625V	750V

SURGEBREAKER® PLUS WHOLE HOUSE SURGE PROTECTOR

Type	Catalog Number
Indoor	SDSB1175C

Square D® QO® Load Centers and Circuit Breakers are part of a comprehensive family of circuit protection solutions. Like all Square D products from Schneider Electric, these innovative protective devices come built for easy installation and reliable operation. And they're designed to stand the test of time.

For more information on our circuit protection products or other solutions, please call your local Square D distributor or sales office. Or visit our website at www.SquareD.com.

QO 4-8 Circuit Load Center

Ideal for indoor and outdoor sub-feed applications, such as dual-zone HVAC, hot tubs and pools. These 125A main lug panels accommodate up to 8 circuits when QO tandem breakers are installed.

QO 32-Circuit Space Load Center

Ideal for new construction, service upgrades or remodels, these new QO 100A and 125A single-phase load centers offer 32 circuit spaces to meet a growing need in the residential market for increased circuit space.

Non-Metallic QO 2-4 Circuit Load Center

Corrosion-resistant enclosure is ideal for accommodating GFCI protection and switching for outdoor circuits, such as hot tubs, fountains and swimming pools.

Generator Panel

If you live where power outages are frequent, or potentially dangerous, the Square D generator panel is the ideal way to safely connect specific circuits in the home to an alternate power source.

National Electrical Code is a registered trademark of the National Fire Protection Association.

Schneider Electric North American Operating Division

1415 S. Roselle Road
Palatine, IL 60067
Tel: 847-397-2600

© 2004 Schneider Electric All Rights Reserved

Order Number 1130BR0001R4/06

The DL05 & DL06 Family of Products

The DL05 micro PLC family includes eight different models. Each has eight inputs and six outputs in the base unit. The DL05 has one option module slot, which can be used to expand the I/O count, provide additional communications capability or add a real-time clock and battery back-up.

The larger DL06 micro PLC family has 20 inputs and 16 outputs in the base unit. The DL06 has four option module slots which can be used to add I/O or provide additional communications options.

Instruction sets

The DL05 CPU offers PID capability, high-speed counting, and most of the same powerful instruction set as our popular D2-250-1 CPU. All DL05 PLCs have two built-in RS-232 communications ports that can be used for programming, operator interface, networking, etc.

The DL06 CPU offers PID capability, floating point number handling, and an instruction set very similar to our D2-260 CPU, including the new *IBox* instructions available in *Direct*SOFT version 5. Many powerful new instructions are included. All DL06 PLCs have two built-in communications ports that can be used for programming, operator interface, networking, etc. One of the DL06 ports is a multi-function port capable of RS-232, RS-422, or RS-485 communications.

Power options

The DL05 and DL06 families have AC and DC power options. They are also offered with a variety of I/O options. You can explore the Quick Selection Guide on the next page to choose the right PLC for your application.

High-speed inputs and outputs

Units with DC inputs have selectable high-speed input features on three input points (DL05) or four input points (DL06). Units with DC outputs can use the first two outputs as a single bi-directional pulse output. Detailed specifications for each model appear later in this section.s

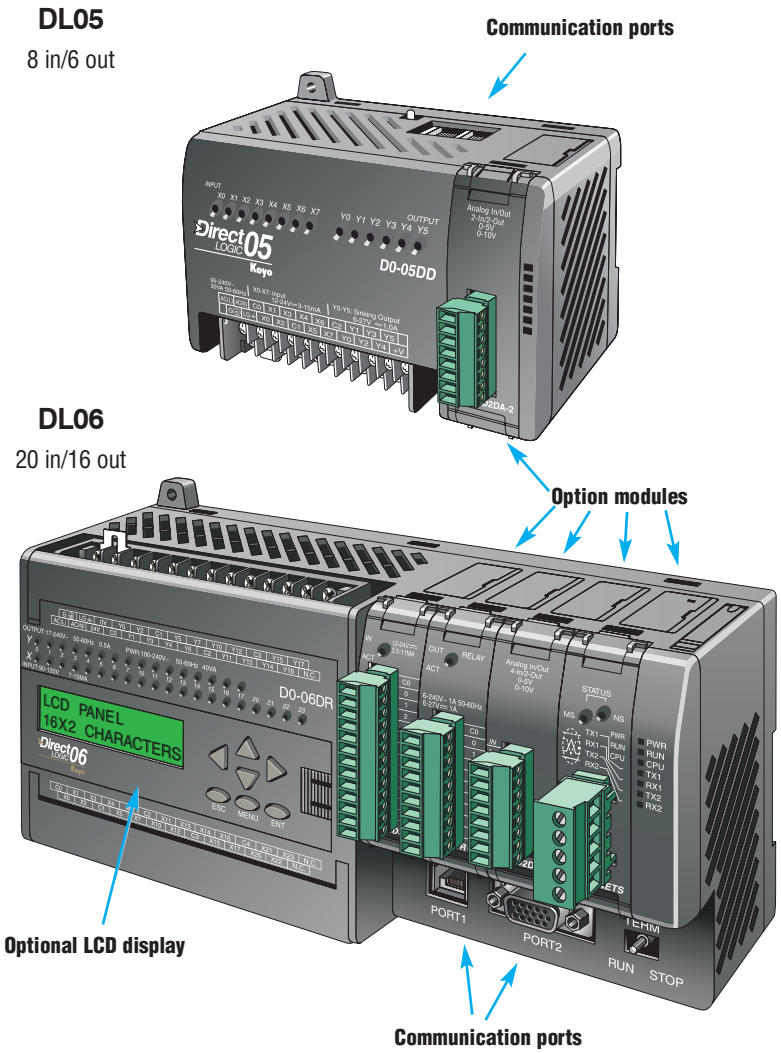

General Specifications	AC Powered	DC Powered
Power	110/220VAC (+ 10%, -15%), 50-60Hz	12/24VDC
Input Voltage Range	95-240VAC	12-24VDC
Maximum Power	30VA (DL05) 40VA (DL06)	20W
Maximum Inrush Current	13A, 1ms (240VAC)	10A < 1ms
Storage Temperature	-4ºF to 158ºF (-20ºC to 70ºC)	
Ambient Operating Temperature	32°F to 131°F (0°C to 55°C)	
Ambient Humidity	5% - 95% relative humidity (non-condensing)	
Vibration Resistance	MIL STD 810C, Method 514.2	
Shock Resistance	MIL STD 810C, Method 516.2	
Noise Immunity	NEMA (ICS3-304)	
Atmosphere	No corrosive gases	

Quick Selection Guide

110/220 (+10%, -15%) VAC Power Options

DL05

D0-05AA
8 AC inputs
6 AC outputs, 0.5A/point

D0-05AD
8 AC inputs
6 DC outputs (sinking), 1.0A/point
Two outputs can be used as a single bi-directional 7kHz pulse output

D0-05AR
8 AC inputs
6 relay outputs, 2A/point

D0-05DA
8 DC inputs
Three inputs are filtered, or configure as a single 5kHz high-speed counter, interrupt input, or pulse catch input
6 AC outputs, 0.5A/point

D0-05DD
8 DC inputs
Four inputs are filtered, or configure as a single 5kHz high-speed counter, interrupt input, or pulse catch input
6 DC outputs (sinking), 1.0A/point
Two outputs can be used as a single bi-directional 7kHz pulse output

D0-05DR
8 DC inputs
Four inputs are filtered inputs, can also be configured as a single 5kHz high-speed counter, interrupt input, or pulse catch input, 6 relay outputs, 2A/point

DL06

D0-06AA
20 AC inputs
16 AC outputs, 0.5A/point

D0-06AR
20 AC inputs
16 relay outputs, 2A/point

D0-06DA
20 DC inputs
Four inputs are filtered inputs, can also be configured as a single 7kHz high-speed counter, interrupt input, or pulse catch input
16 AC outputs, 0.5A/point

D0-06DD1
20 DC inputs
Four inputs are filtered inputs, can also be configured as a single 7kHz high-speed counter, interrupt input, or pulse catch input
16 DC outputs (sinking), 1.0A/point*
Two outputs can be used as a single bi-directional 10kHz pulse output

D0-06DD2
20 DC inputs
Four inputs are filtered inputs, can also be configured as a single 7kHz high-speed counter, interrupt input, or pulse catch input
16 DC outputs (sourcing), 1.0A/point
Two outputs can be used as a single bi-directional 10kHz pulse output

D0-06DR
20 DC inputs
Four inputs are filtered inputs, can also be configured as a single 7kHz high-speed counter, interrupt input, or pulse catch input
16 relay outputs, 2A/point

12/24 VDC Power Options

DL05

D0-05DD-D
8 DC inputs
Three inputs are filtered inputs, can also be configured as a single 5kHz high-speed counter, interrupt input, or pulse catch input
6 DC outputs (sinking), 1.0A/point
Two outputs can be used as a single bi-directional 7kHz pulse output

D0-05DR-D
8 DC inputs
Three inputs are filtered inputs, can also be configured as a single 5kHz high-speed counter, interrupt input, or pulse catch input
6 Relay outputs, 2A/point

DL06

D0-06DD1-D
20 DC inputs
Four inputs are filtered inputs, can also be configured as a single 7kHz high-speed counter, interrupt input, or pulse catch input
16 DC outputs (sinking), 1.0A/point*
Two outputs can be used as a single bi-directional 10kHz pulse output

D0-06DR-D
20 DC inputs
Four inputs are filtered inputs, can also be configured as a single 7kHz high-speed counter, interrupt input, or pulse catch input
16 relay outputs, 2A/point

D0-06DD2-D
20 DC inputs
Four inputs are filtered inputs, can also be configured as a single 7kHz high-speed counter, interrupt input, or pulse catch input
16 DC outputs (sourcing), 1.0A/point
Two outputs can be used as a single bi-directional 10kHz pulse output

Note: High speed outputs cannot be used if high-speed inputs are in use, and high-speed inputs cannot be used if high-speed outputs are in use. Analog inputs and outputs can be accommodated with option modules, which are available for both the DL05 and DL06.

**** These outputs must be derated to 0.6A for EN61131-2 compliance.***

Features at a Glance

The DL05 and DL06 micro PLCs are complete self-contained systems. The CPU, power supply, and I/O are all included inside the same housing. Option modules are available to expand the capability of each PLC family for more demanding applications. The standard features of these PLCs are extraordinary and compare favorably with larger and more expensive PLCs.

The specification tables to the right are meant for quick reference only. Detailed specifications and wiring information for each model of the DL05 and DL06 PLCs begin on page 2–33.

Program capacity

Most boolean ladder instructions require a single word of program memory. Other instructions, such as timers, counters, etc., require two or more words. Data is stored in V-memory in 16-bit registers.

Performance

The performance characteristics shown in the tables represent the amount of time required to read the inputs, solve the Relay Ladder Logic program and update the outputs.

Instructions

A complete list of instructions is available at the end of this section.

Communications

The DL05 and DL06 offer powerful communication features normally found only on more expensive PLCs.

Special features

The DC input and DC output PLCs offer high-speed counting or pulse output. Option module slots allow for discrete I/O expansion, analog I/O, or additional communication options.

DL05 CPU Specifications

System capacity

Total memory available (words)	6K
Ladder memory (words)	2,048
V-memory (words)	4,096
User V-memory	3,968
Non-volatile user V-memory	128
Battery backup	Yes[1]
Total built-in I/O	14
Inputs	8
Outputs	6
I/O expansion	Yes[1]

Performance

Contact execution (Boolean)	0.7µs
Typical scan (1K Boolean)[2]	1.5-3ms.

Instructions and diagnostics

RLL ladder style	Yes
RLLPLUS/flowchart style (Stages)	Yes/256
Run-time editing	Yes
Scan	Variable/fixed
Number of Instructions	133
Types of Instructions:	
Control relays	512
Timers	128
Counters	128
Immediate I/O	Yes
Subroutines	Yes
For/next loops	Yes
Timed interrupt	Yes
Integer math	Yes
Floating-point math	No
PID	Yes
Drum sequencers	Yes
Bit of word	Yes
ASCII print	Yes
Real-time clock/calendar	Yes[1]
Internal diagnostics	Yes
Password security	Yes
System and user error log	No

Communications

Built-in ports	Two RS-232C
Protocols supported:	
K-sequence (proprietary protocol)	Yes
DirectNet master/slave	Yes
Modbus RTU master/slave	Yes
ASCII out	Yes
Baud rate	
Port 1	9,600 baud (fixed)
Port 2	selectable 300-38,400 baud (default 9,600)

Specialty Features

Filtered inputs	Yes[3]
Interrupt input	Yes[3]
High speed counter	Yes, 5kHz[3]
Pulse output	Yes, 7kHz[3]
Pulse catch input	Yes[3]

1- These features are available with use of certain option modules. Option module specifications are located later in this section.

2- Our 1K program includes contacts, coils, and scan overhead. If you compare our products to others, make sure you include their scan overhead.

3- Input features only available on units with DC inputs and output features only available on units with DC outputs.

DL06 CPU Specifications

System capacity

Total memory available (words)	14.8K
Ladder memory (words)	7680
V-memory (words)	7616
User V-memory	7488
Non-volatile user V-memory	128
Built-in battery backup (D2-BAT-1)	Yes
Total I/O	36
Inputs	20
Outputs	16
I/O expansion	Yes[1]

Performance

Contact execution (Boolean)	0.6µs
Typical scan (1K Boolean)[2]	1-2ms.

Instructions and diagnostics

RLL ladder style	Yes
RLLPLUS/flowchart style (Stages)	Yes/1024
Run-time editing	Yes
Scan	Variable/fixed
Number of Instructions	229
Types of Instructions:	
Control relays	1024
Timers	256
Counters	128
Immediate I/O	Yes
Subroutines	Yes
For/next loops	Yes
Table functions	Yes
Timed interrupt	Yes
Integer math	Yes
Trigonometric functions	Yes
Floating-point math	Yes
PID	Yes
Drum sequencers	Yes
Bit of word	Yes
Number type conversion	Yes
ASCII in, out, print	Yes
LCD instruction	Yes
Real-time clock/calendar	Yes
Internal diagnostics	Yes
Password security	Yes
System and user error log	No

Communications

Built-in ports:	One RS-232C
	One multi-function RS232C/RS422/RS485

NOTE: RS485 is for MODBUS RTU only.

Protocols supported:	
K-sequence (proprietary protocol)	Yes
DirectNet master/slave	Yes
Modbus RTU master/slave	Yes
ASCII in/out	Yes
Baud rate	
Port 1	9,600 baud (fixed)
Port 2	selectable 300-38,400 baud (default 9,600)

Specialty Features

Filtered inputs	Yes[3]
Interrupt input	Yes[3]
High speed counter	Yes, 7kHz[3]
Pulse output	Yes, 10kHz[3]
Pulse catch input	Yes[3]

1- These features are available with use of certain option module. Option module specifications are located later in this section.

2- Our 1K program includes contacts, coils, and scan overhead. If you compare our products to others, make sure you include their scan overhead.

3- Input features only available on units with DC inputs and output features only available on units with DC outputs.

Features at a Glance

*Direct*SOFT software

The DL05 and DL06 PLCs use the same familiar *Direct*SOFT programming software that our larger PLCs use. We now offer a special FREE version of *Direct*SOFT which gives you all the great new features of the full version, but with a 100-word download restriction. For programs larger than 100 words, the full package is required. The FREE PC-DS100 software may be sufficient to program the DL05 and DL06. If you are programming with a full package version prior to v5.0, you will need v2.4 or later for the DL05 PLCs and v4.0 or later for the DL06. We always recommend the latest version for the most robust features.

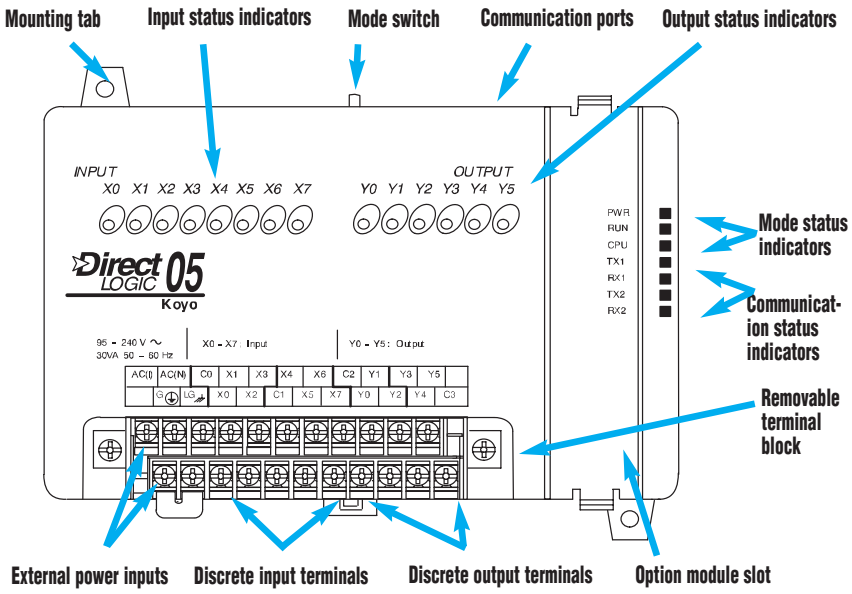

Hardware features diagrams

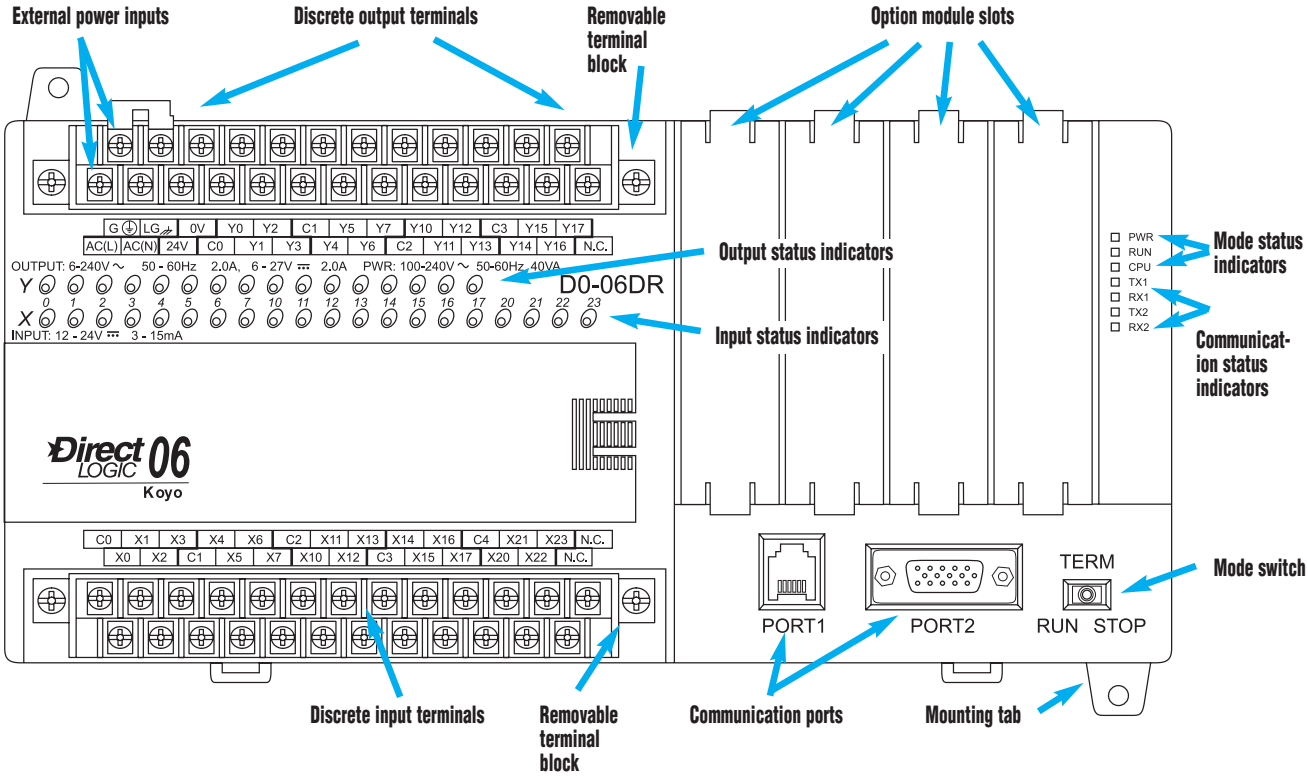

Product Dimensions and Installation

It is important to understand the installation requirements for your DL05 or DL06 system. Your knowledge of these requirements will help ensure that your system operates within its environmental and electrical limits.

Plan for safety

This catalog should never be used as a replacement for the user manual. You can purchase, download free, or view online the user manuals for these products. The D0-USER-M is the publication for the DL05 PLCs, and the D0-06USER-M is the publication for the DL06 PLCs. The D0-OPTIONS-M is the user manual for the option modules. These user manuals contain important safety information that must be followed. The system installation should comply with all appropriate electrical codes and standards.

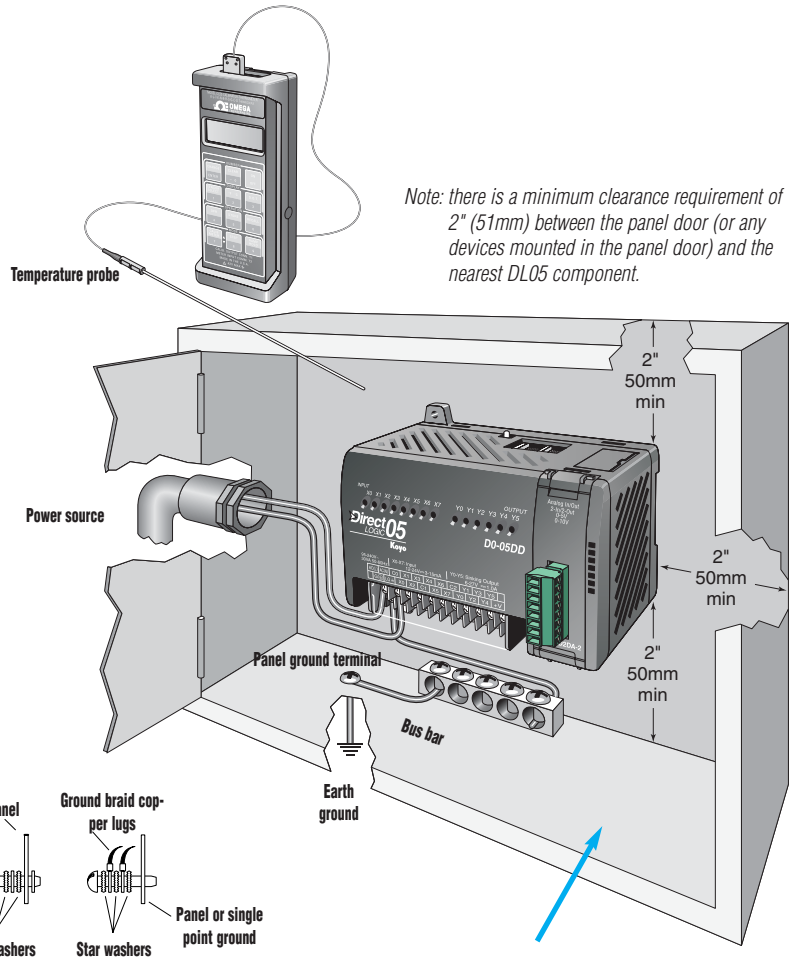

Note: there is a minimum clearance requirement of 2" (51mm) between the panel door (or any devices mounted in the panel door) and the nearest DL05 component.

See the enclosure section of this desk reference to find an enclosure that fits your application.

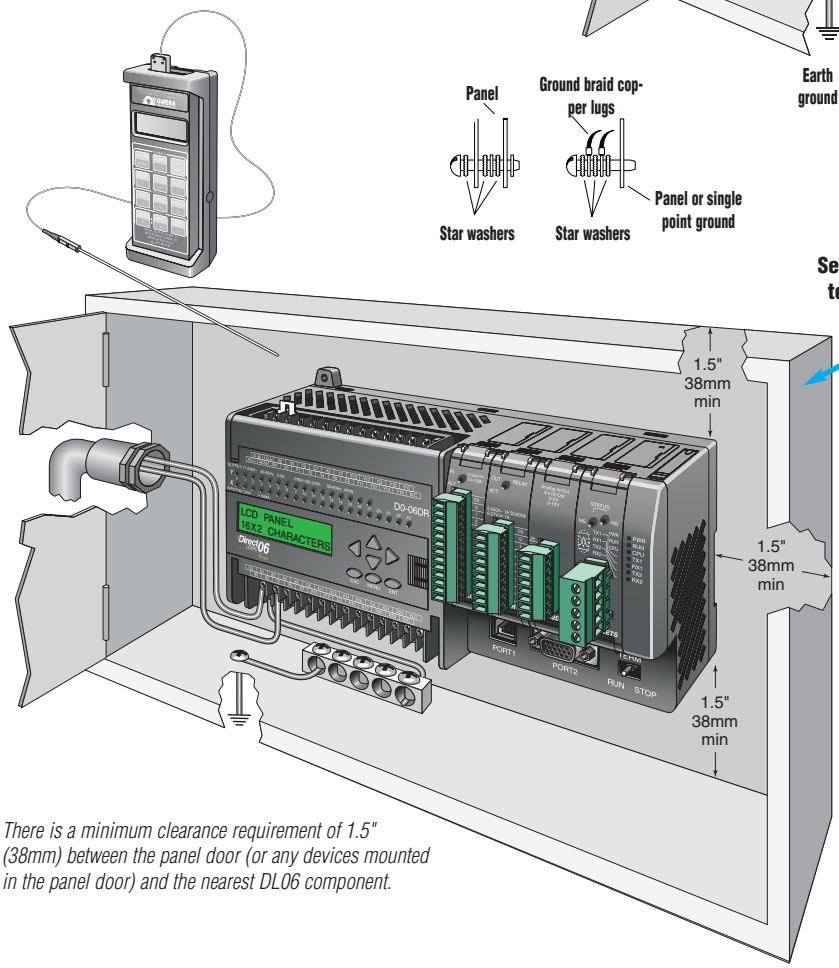

Note: There is a minimum clearance requirement of 1.5" (38mm) between the panel door (or any devices mounted in the panel door) and the nearest DL06 component.

Environmental Specifications for DL05 and DL06	
Storage Temperature	-4º F-158ºF (-20ºC to 70ºC)
Ambient Operating Temperature	32ºF-131ºF (0º to 55ºC)
Ambient Humidity	5 to 95% relative humidity (non-condensing)
Vibration Resistance	MIL STD 810C Method 514.2
Shock Resistance	MIL STD 810C Method 516.2
Noise Immunity	NEMA (ICS3-304)
Atmosphere	No corrosive gases

Product Dimensions and Installation

Unit dimensions and mounting orientation

DL05 and DL06 PLCs must be mounted properly to ensure ample airflow for cooling purposes. It is important to follow the unit orientation requirements and to verify that the PLC's dimensions are compatible with your application. Notice particularly the grounding requirements and the recommended cabinet clearances.

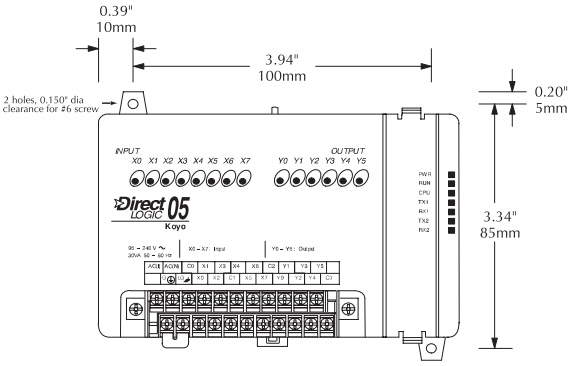

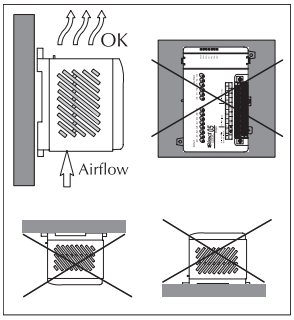

Mounting orientation

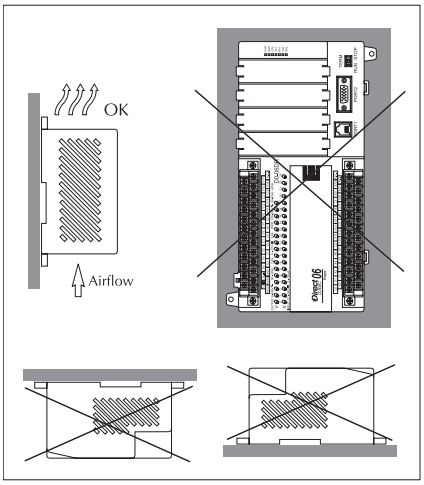

Mounting orientation

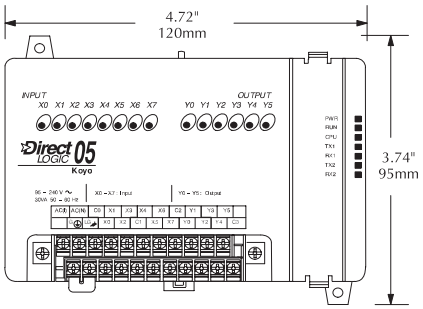

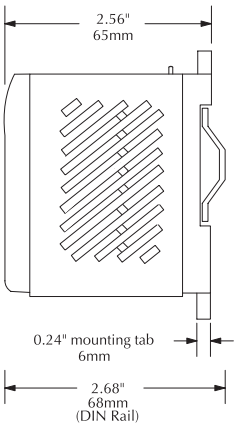

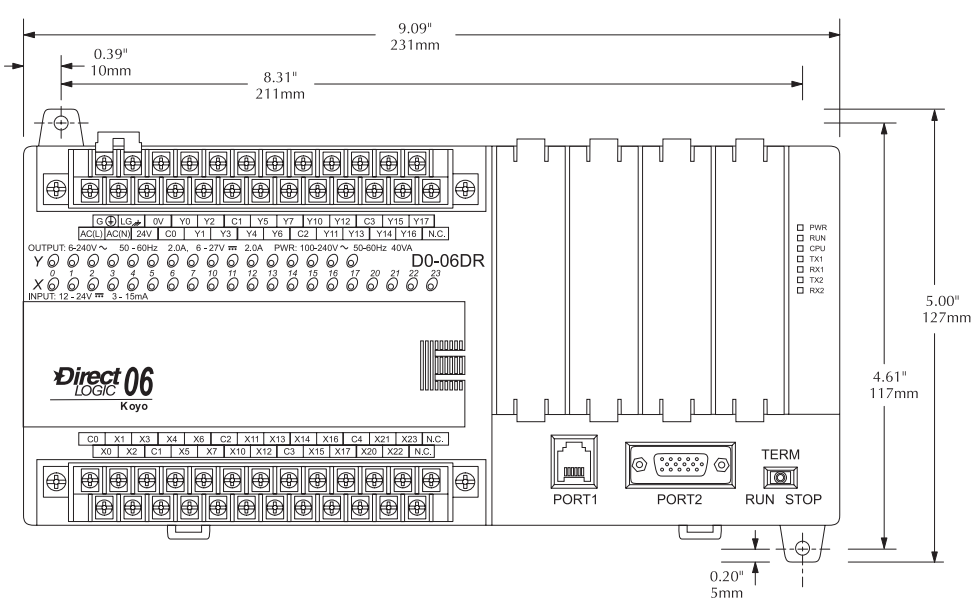

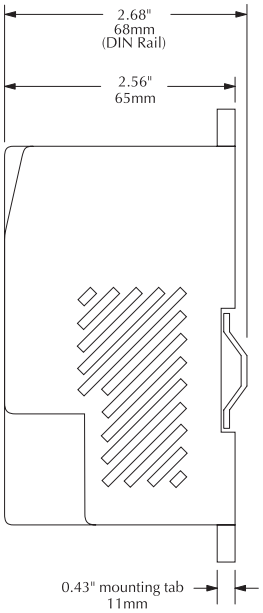

Choosing the I/O Type

The DL05 and DL06 product families offer a number of different I/O configurations. Choose the configuration that is right for your application. Also, keep in mind that both the DL05 and the DL06 PLCs offer the ability to add I/O with the use of option modules.

Fixed discrete I/O

All DL05 micro PLCs have eight built-in inputs and six built-in outputs on the base unit. The DL06 micro PLCs have 20 built-in inputs and 16 built-in outputs on the base unit. We offer the most common I/O types for your convenience, including AC inputs and outputs, DC sinking and sourcing inputs and outputs, and relay outputs. Refer to the tables to the right to see the I/O combinations available and their voltage ranges.

Option module slots

The DL05 has one option module slot and the DL06 has four option module slots. Check out the discrete and analog I/O you can add by purchasing inexpensive option modules. Specialty modules are also available and are discussed later in this section.

Automatically assigned addresses

The DL05 uses automatic addressing, so for the vast majority of applications, there is no setup required. We use octal addressing for our products, which means there are no 8s or 9s. The DL05's eight input points use addresses X0-X7, and the six output points use addresses Y0-Y5. Similarly, the DL06 uses addresses X0-X23 and Y0-Y17.

Review the I/O specs and wiring diagrams

The Base Unit I/O tables give a brief description of the I/O combinations offered for the DL05 and DL06 PLCs. The I/O specifications are discussed in more detail later in this section.

DL05 Base Unit I/O Table

Part Number	Inputs			Outputs			Price
	I/O type/ commons	Sink or source	Voltage ranges	I/O type/ commons	Sink or source	Voltage/current ratings	
D0-05AR	AC/2	N/A	90-120VAC	Relay/2	N/A	6-27VDC, 2A 6-240VAC, 2A	<--->
D0-05DR	DC/2	Sink or Source	12-24VDC	Relay/2	N/A	6-27VDC, 2A 6-240VAC, 2A	<--->
D0-05AD	AC/2	N/A	90-120VAC	DC/1	Sink	6-27VDC, 0.5A (Y0-Y1) 6-27VDC, 1.0A (Y2-Y5)	<--->
D0-05DD	DC/2	Sink or Source	12-24VDC	DC/1	Sink	6-27VDC, 0.5A (Y0-Y1) 6-27VDC, 1.0A (Y2-Y5)	<--->
D0-05AA	AC/2	N/A	90-120VAC	AC/2	N/A	17-240VAC 47-63Hz 0.5A	<--->
D0-05DA	DC/2	Sink or Source	12-24VDC	AC/2	N/A	17-240VAC 47-63Hz 0.5A	<--->
D0-05DR-D	DC/2	Sink or Source	12-24VDC	Relay/2	N/A	6-27VDC, 2A 6-240VAC, 2A	<--->
D0-05DD-D	DC/2	Sink or Source	12-24VDC	DC/1	Sink	6-27VDC, 0.5A (Y0-Y1) 6-27VDC, 1.0A (Y2-Y5)	<--->

Sinking/sourcing

If you are using a DC field device, you should consider whether that device requires a sinking or sourcing PLC I/O configuration. For more information on sinking and sourcing concepts, please refer to the Appendix of this catalog.

Sink/source inputs — All *built-in* DC inputs on the DL05 and DL06 micro PLCs can be wired in a sinking or sourcing configuration. However, all inputs on a single common must use the same configuration. In some cases, the DC inputs on option modules are fixed as sinking or sourcing. Refer to the table on the next page.

Sinking outputs — All *built-in* DC outputs on the DL05 are sinking. The DL06 family offers two PLCs with sinking DC outputs, and two with sourcing outputs.

Sourcing outputs — The DL06 PLC family includes the D0-06DD2(-D) with sourcing outputs. If a sourcing output is required, you might also consider using the D0-xxTD2 option module with sourcing outputs, which can also be installed in a DL05 or DL06 PLC.

High-speed inputs and pulse outputs

DL05s and DL06s with DC inputs offer high-speed input features, and DC output units offer pulse output features. The first three DC inputs on the DL05 PLCs are set up by default as filtered inputs with a 10 ms filter. Likewise, the first four DC inputs on the DL06 PLCs are set to the same default value. By entering a setup code in a special V-memory location, you can choose other features. In some modes of operation, you have a choice as to how you use each point. For example, if you use X0 as an up counter, you can use X2 as a reset input for the counter or as a filtered discrete input. If these features interest you, take a look at the detailed high-speed I/O descriptions found later in this section.

Type LC

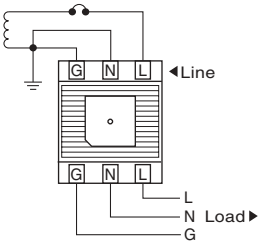

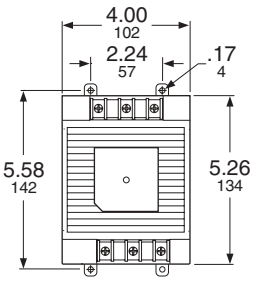

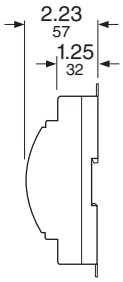

Series Design Combination Suppressor and Noise Filter

Provides high quality surge suppression and electrical noise filtration for any microprocessor based load, PLCs, motion control, computer or analyzer.

- Up to -75 db noise attenuation
- UL 1449 330 V clamping rated
- 40 kA surge rating
- Short circuit current rating 22,000 A maximum
- Optional Form C dry contact status output
- DIN rail or direct panel mounting
- LED status indication
- UL, cUL and CE recognized

LC Series In-Line Transient Voltage Surge Protector/Noise Filter

Service Voltage	Rated Load Current	Catalog Number▲	Price
120 V Single Phase	5 A	TVS120LC5	**$170.**
	10 A	TVS120LC10	**188.**
	15 A	TVS120LC15	**205.**
	20 A	TVS120LC20	**220.**
230 V Single Phase	5 A	TVS230LC5	**170.**
	10 A	TVS230LC10	**188.**
	15 A	TVS230LC15	**205.**
	20 A	TVS230LC20	**220.**

▲ Optional Form C Dry Contact—Add "C" suffix to catalog number, e.g. TVS120LC5**C**. Price adder **$60**.

Type XR

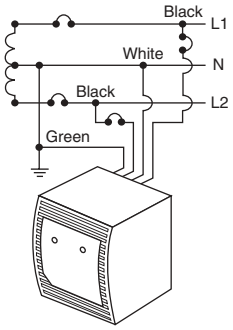

Single Phase 3 Wire (+GND)
120/240 Vac

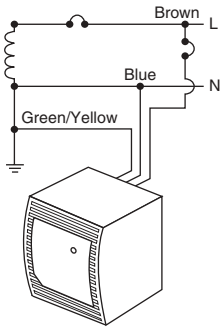

Single Phase 2 Wire (+GND)
230 Vac

Nipple Mounted Transient Voltage Surge Suppressor

Designed to provide protection at service entrance location in panels, control cabinets and instrument enclosures.

- 40 kA surge rating
- Short circuit current rating 22,000 A maximum
- NEMA 4X housing suitable for indoor or outdoor application
- Audible alarm standard
- Convenient back or side nipple mounting locations available
- UL, cUL Listed

XR Series Transient Voltage Surge Suppressor

Service Voltage	Mounting Method	Catalog Number	Price
120/240 Vac Single Phase 3 Wire + G	Back Nipple	TVS120XR40B	**$210.**
	Side Nipple	TVS120XR40S	**210.**
230 Vac Single Phase 2 Wire + G	Back Nipple	TVS230XR40B	**231.**
	Side Nipple	TVS230XR40S	**231.**

Side Nipple

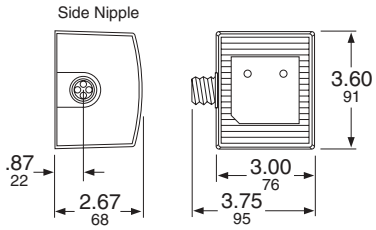

Back Nipple

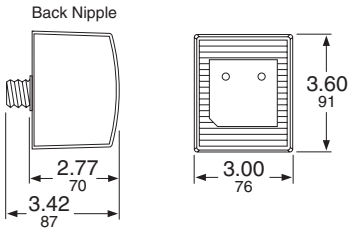

Mounting Bracket for Nipple Mounted Suppressor or Arrester

Catalog Number	Description	Price
QOSAMK	Mounts to QO® or HOMELINE® Load Center	**$ 7.60**
MMSAMK	Mounts to Series M Multi-metering Equipment	**53.00.**

QOSAMK

MMSAMK

© 2003 Schneider Electric
All Rights Reserved
9/8/03

Running low on nails, nuts and bolts?
See pages 2847-3110 of our NEW Fastener section!

Simpson®

Minority-Owned Business

Made In U.S.A.

Mini-Max

Falcon

2800 Series

Digital Panel Meters

MINI-MAX

Fit standard 3/64 DIN cutout. Meters have a shallow depth—extending only 2.36" behind the panel. Unique mounting bracket allows stacking of multiple meters.

- 85-250VAC or 9-32VDC powered
- Negative image, bright red backlighting is available

FALCON

Fit standard 1/8 DIN cutout and feature a bright red, 0.56" LED display. Easy installation with screw terminal connectors. Jumper-selectable decimal point. Optional excitation.

- 120VAC powered
- Easily scaled display

2800 SERIES

DC voltmeters have bright red, 0.56" LED displays and automatic zero and polarity indication. Meters fit 1.682 x 3.622" cutout and include template and mounting hardware. 120VAC powered.

Digits	Input Range	Display Span	Notes	Simpson Model	Stock No.		Each	Shpg. Wt.
MINI-MAX								
3½	200mVDC	1999	—	M235-0-0-11-0	1X309	✓	$97.30	0.3
3½	20VDC	1999	—	M235-0-0-13-0	1X317	✓	97.30	0.3
3½	20VDC	1999	1	M235-1-0-13-0	3T480	✓	118.90	0.3
3½	20VDC	1999	2	M235-0-2-13-0	1X345	✓	130.20	0.2
3½	200VDC	1999	—	M235-0-0-14-0	1X319	✓	97.30	0.3
3½	200VDC	1999	1	M235-1-0-14-0	3T481	✓	118.90	0.3
4½	750VDC	19999	—	M245-0-0-15-0	1X378	✓	129.70	0.3
3½	50mVDC	0-100 A DC	6,7	M235-0-0-11-0-Q	1X313	✓	112.30	0.3
3½	50mVDC	0-100 A DC	1,6,7	M235-1-0-11-0-Q	1X355	✓	133.90	0.3
3½	200VAC	1999	9	M235-0-0-34-0	1X321	✓	135.40	0.3
3½	200VAC	1999	1,9	M235-1-0-34-0	1X357	✓	157.00	0.3
4½	750VAC	19999	9	M245-0-0-35-0	1X382	✓	168.00	0.3
4½	750VAC	19999	1,9	M245-1-0-35-0	1X429	✓	189.50	0.3
3½	0-5A AC	0-10/100/1000	5,7,9	M235-0-0-46-0-A	1X323	✓	150.50	0.5
3½	0-5A AC	0-10/100/1000	1,5,7,9	M235-1-0-46-0-A	1X359	✓	172.00	0.3
3½	0-5A AC	0-20/200	5,7,9	M235-0-0-46-0-K	1X329	✓	150.50	0.3
3½	0-5A AC	0-30/300	5,7,9	M235-0-0-46-0-E	1X325	✓	150.50	0.2
3½	0-5A AC	0-50/500	5,7,9	M235-0-0-46-0-H	1X327	✓	150.50	0.3
3½	0-5A AC	0-50/500	1,5,7,9	M235-1-0-46-0-H	1X364	✓	172.00	0.3
3½	4-20mADC	0-100%	8	M235-0-0-71-0	1X331	✓	113.70	0.3
3½	4-20mADC	0-100%	1,8	M235-1-0-71-0	3T482	✓	135.30	0.3
3½	0-10VDC	0-100%	8	M235-0-0-73-0	1X336	✓	113.70	0.3
3½	0-10VDC	0-100%	1,8	M235-1-0-73-0	3T484	✓	135.30	0.3
3½	0-100VDC	1999	1,8	M235-1-0-74-0	3T485	★	135.30	0.3
3½	20-199.9 Hz	20-199.9	—	M235-0-0-81-0	4TL80	✓	97.30	0.3
3½	20-199.9 Hz	20-199.9	1	M235-1-0-81-0	4TL82	✓	118.90	0.3
4	Type J T/C	-328 to 2192°F (-200 to 1200°C)	—	M240-0-91-0-F	3LW52	✓	173.50	0.3
4	Type K T/C	-328 to 2498°F (-200 to 1370°C)	—	M240-0-92-0-F	3LW53	✓	173.50	0.1
4	RTD Pt100	-328 to 1562°F (-200 to 850°C)	—	M240-0-93-0-F	3LW54	✓	173.50	0.3
FALCON								
3½	200mVDC	1999	—	F35-1-11-0	2T859	✓	113.30	0.8
3½	20VDC	1999	—	F35-1-13-0	2T861	✓	113.30	0.8
4½	20VDC	19999	—	F45-1-13-0	2T864	✓	206.50	0.8
3½	200VDC	1999	—	F35-1-14-0	2T862	✓	113.30	0.8
3½	50mVDC	0-150 ADC	6,7	F35-1-11-0-L	1X145	✓	128.30	0.8
3½	200VAC	1999	—	F35-1-34-0	2T870	✓	151.50	1.3
3½	750VAC	1999	—	F35-1-35-0	2T871	✓	151.50	1.3
3½	0-5A AC	1999	—	F35-1-46-0	1TZ50	✓	151.50	0.8
3½	0-5A AC	0-10/100/1000	5,7	F35-1-46-0-A	2T872	✓	166.50	0.6
3½	0-5A AC	0-15/150	5,7	F35-1-46-0-B	2T873	✓	166.50	0.8
3½	0-5A AC	0-20/200	5,7	F35-1-46-0-K	2T874	✓	166.50	1.3
3½	0-5A AC	0-30/300	5,7	F35-1-46-0-E	2T875	✓	166.50	1.3
3½	0-5A AC	0-40/400	5,7	F35-1-46-0-G	2T876	✓	166.50	0.9
3½	0-5A AC	0-50/500	5,7	F35-1-46-0-H	2T877	✓	166.50	1.3
4½	0-5A AC	19999	—	F45-1-46-0	1TZ52	✓	244.75	0.8
4½	0-5A AC	0-10/100/1000	5,7	F45-1-46-0-A	1X181	✓	259.75	0.8
3½	4-20mADC	0-100%	8	F35-1-71-0	2T884	✓	147.80	0.8
3½	1-5VDC	0-100%	8	F35-1-72-0	1X159	✓	147.80	1.4
3½	0-10VDC	0-100%	8	F35-1-73-0	2T885	✓	147.80	0.8
4½	4-20mADC	0-100%	8	F45-1-71-0	2T886	✓	206.50	1.4
4½	0-10VDC	0-100%	8	F45-1-73-0	2T887	✓	206.50	0.8
4½	Type J T/C	19999	4	F45-1-80-0-F	2T907	✓	206.50	0.8
3½	20-199.9 Hz	20-199.9	—	F35-1-91-0	4TL78	✓	113.30	0.8
2800 SERIES								
3½	200mVDC	1999	—	24500	1T899	🚚	178.00	0.8
3½	20VDC	1999	—	24502	1T901	✓	178.00	0.8
3½	200VDC	1999	—	24503	1T902	✓	178.00	0.8

(1) Negative Image Red Display. (2) 9-32 VDC power supply. (4) Jumper-configurable For Type J,K,T,R,S, or E Thermocouple. (5) Use 5A current transformer. (6) Use external 50mV shunt. (7) Factory prescaled. (8) DC Process. (9) True RMS.

🚚 = Shipped Directly from Manufacturer ✓= Extended Warranty Available ★= New Item

PHASEO™ Power Supplies
ABL7

Catalog
April

04

Class 8440

CONTENTS

Description **Page**

For ABL7 Power Supplies

Product Description 2–7
Selection 8
Specifications and Characteristics 9–11
Technical Overview 12–16
Dimensions and Wiring Diagrams 17–18

For AS-Interface Power Supplies

Product Description 19
Selection 19
Specifications and Characteristics 20
Technical Overview 21
Dimensions and Wiring Diagrams 22
Catalog Number Index 23

a brand of Schneider Electric

Telemecanique

The characteristics to be taken into account when selecting a power supply are:

- the required output voltage and current,
- the supply voltage available in the installation.

An initial selection can be made using the table on page 3. This may however result in several products being selected as suitable. Other selection criteria must therefore be taken into account.

Power Supply Voltage

The Phaseo™ range is the solution because it guarantees precision within 4% of the output voltage, whatever the load current and input voltage. In addition, the wide input voltage range of Phaseo™ power supplies allows connection to all voltage supplies within the nominal range, without any adjustment. The Phaseo™ **RP** and **CEM** families can also be connected to 110 Vdc and 220 Vdc supply voltages.

Short Circuit Protection

Phaseo™ power supplies are equipped with an electronic protection device. This protection device resets itself automatically on elimination of the fault, which avoids having to take any action or change a fuse. In addition, the Phaseo™ **ABL7RP / UES / UPS** power supplies allow the user to select the reset mode in the event of a fault:

- in the “AUTO” position, resetting is automatic,
- in the “MANU” position, resetting occurs after elimination of the fault and after switching the supply power off and back on.

This feature allows Phaseo™ **ABL7RP / UES / UPS** power supplies to be used in installations where the risks associated with untimely restarting are significant.

Phase Failure

In the event of failure of one phase, the 3-phase **ABL7UES / UPS** power supplies switch to relaxation mode for as long as the input voltage is < 450 V. For operation on higher voltages (e.g. 480 V), use of an upstream GV2 type residual current protection device is recommended.

Electromagnetic Compatibility

Levels of conducted and radiated emissions are defined in standards EN 55011 and EN 55022. The majority of products in the Phaseo™ range have class B certification and can be used without any restrictions, due to their low emissions. **ABL7CEM24003** and **ABL7CEM24006** power supplies have class A certification.

Power Factor

The current drawn by a power supply is not sinusoidal. This leads to the existence of harmonic currents which pollute the voltage supply.

Regulated switch mode supplies always produce harmonic currents; a filter circuit (Power Factor Correction or PFC) must therefore be added to comply with standard EN 61000-3-2. Phaseo™ **ABL7RP** and **ABL7UES / UPS** power supplies conform to standard EN 61000-3-2 and can therefore be connected directly to public voltage power supplies.

© 2000-2004 Schneider Electric All Rights Reserved

Device type	ABL7CEM	ABL7RM		ABL7RE	ABL7RP	ABL7UES / UPS	ASIABL		
	Single-phase, regulated switch mode					3-phase regulated switch mode	Regulated switch mode for AS-Interface power supplies		
Functions	Supplies for dc control circuits								
Applications	Simple, low power equipment.	Industrial, commercial or residential applications. Modular format allowing integration into panels.		Industrial applications, low and medium power. Machine equipment applications.	Industrial or commercial applications on sites sensitive to supply interference. Protection against accidental restarting.	Industrial applications. In-line continuous process equipment, machine tools, injection presses, etc.	Industrial applications. Supply of dc voltage necessary for AS-Interface systems.		
Nominal power	7 to 30 W	22 W	30 W	48 to 240 W	60 to 240 W	120 to 960 W	72 W	145 W	2 x 72 W
Input voltage	100 to 240 Vac single-phase 110 to 220 Vdc compatible *(2)*	100 to 240 Vac single-phase		100 to 240 Vac single-phase	100 to 240 Vac single phase, 110 to 220 Vdc compatible *(1)*	3 x 400 to 520 Vac 3-phase	100 to 240 Vac single-phase		
Output voltage	24 Vdc adjustable	12 Vdc adjustable	24 Vdc adjustable	24 Vdc adjustable	12, 24 Vdc or 48 V adjustable	24 Vdc adjustable	30 Vdc		24 Vdc adjustable
Technology	Primary switch mode electronic power supplies.								
Secondary protection	Integrated, against overloads and short-circuits, with automatic reset.				Integrated, against overloads and short-circuits, with manual and automatic reset.	Integrated, against overloads and short-circuits, with manual and automatic reset.	Integrated, against overloads and short-circuits, over voltage and under voltage.		
Signalling	Output indicator lamp.			Output and input indicator lamp.		Output indicator lamp.	Output and input indicator lamps		
Other characteristics	Connection by lug-clamps possible	–		–	Anti-harmonic distortion filter	Anti-harmonic distortion filter	Available with ground fault protection		
Mounting	35 mm DIN rail or panel mount	35 mm DIN rail or panel mount		35 mm DIN rail		5 A, 10 A versions - 35 mm DIN rail 20 A, 40 A versions - panel mount	35 mm DIN rail		
Conforming to standards	UL508 EN 50081-2, IEC 61000-6-2, EN 60950	UL508 EN 50081-2, IEC 61000-6-2 (EN 50082-2), IEC 60950, EN61131-2 / A11		UL508 EN 50081-2, IEC 61000-6-2, (EN 50082-2), IEC 60950	UL508 EN 50081-2, IEC 61000-6-2, (EN 50082-2), IEC 60950, 61000-3-2	UL508 EN 50081-2, EN 50082-2, EN 60950,IEC 61000-3-2	UL508 EN 50081-2, IEC 61000-6-2, EN 55022 class B		
Approvals	cULus, TÜV, CE	UL, CSA, TÜV, CE		UL, CSA, TÜV, CTick, CE		cULus, cCSAus, CE	UL, CSA, TÜV, CE		
Pages	4	5		6		7	19		

Selection According to Applications Characteristics

Type of supply		**Single-phase**				**3-phase**
Supply Voltage		100 to 240 Vac 50 / 60 Hz, 110 to 220 Vdc (1) (2), Wide range				3 x 400 to 520 V, 50 / 60 Hz Wide range
Permissible variation		85 to 264 V, 47 to 63 Hz / 100 to 250 Vdc (1), 105 to 370 Vdc (2)				340 to 550 V / 47 to 63 Hz
Output voltage		12 V	48 V	24 V	24 V	24 V
Output current	0.3 A			**ABL7CEM24003**		
	0.6 A			**ABL7CEM24006**		
	1.2 A			**ABL7CEM24012**		
	1.3 A			**ABL7RM2401**		
	1.9 A	**ABL7RM1202**				
	2 A				**ABL7RE2402**	
	3 A		**ABL7RP4803**	**ABL7RP2403**	**ABL7RE2403**	
	5 A	**ABL7RP1205**		**ABL7RP2405**	**ABL7RE2405**	**ABL7UES24050**
	10 A			**ABL7RP2410**	**ABL7RE2410**	**ABL7UPS24100**
	20 A					**ABL7UPS24200**
	40 A					**ABL7UPS24400**
Compliance with EN61000-3-2		Yes (not applicable for **ABL7CEM,** and **ABL7RM**)			No	Yes
Integrated automatic protection		Yes Automatic or manual restart on **ABL7RP** Automatic restart only on **ABL7CEM** and **ABL7RM**			Yes Automatic restart	Yes Automatic or manual restart

(1) Vdc values for **ABL7RP** power supplies, not indicated on the product.
(2) Vdc values for **ABL7CEM** power supplies, not indicated on the product.

© 2000-2004 Schneider Electric All Rights Reserved

ABL7 POWER SUPPLIES

The ABL7 range of power supplies is designed to provide the dc voltage necessary for the control circuits of automation system equipment. Split into four families, this range meets all the needs encountered in industrial, commercial and residential applications. Single-phase or 3-phase, of the electronic switch mode type, they provide a quality of output which is suitable for the loads supplied and compatible with the power supply available in the equipment. Protection devices are often used with these power supplies for total safety.

Phaseo™ Switch Mode Power Supplies

These switch mode power supplies are totally electronic and regulated. The use of electronics makes it possible to significantly improve the performance of these power supplies which offer:

- compact size
- integrated overload, short-circuit, over voltage and under voltage protection
- a very wide range of permissible input voltages, without any adjustment
- a high degree of output voltage stability
- good performance
- LED indicators on the front panel

Phaseo™ power supplies are available in single-phase and 3-phase versions. They deliver a voltage which is precise to ≤4 %, whatever the load and type of power supply, within a range of 85 to 264 V for single-phase, or 340 to 550 V for 3-phase. Conforming to IEC standards and UL and CSA certifications, they are suitable for universal use. The inclusion of overload and short-circuit protection makes downstream protection unnecessary if discrimination is not required.

ABL7CEM Compact Switch Mode Power Supplies

The **ABL7CEM** single phase regulated switching power supplies are designed to provide the dc voltage necessary for most simple circuits. These power supplies are totally electronic and regulated. The use of electronics makes it possible to significantly improve the performance of these power supplies. They provide:

- Compact size
- Integrated overload, short circuit and over voltage protection
- A wide range of permitted input voltages, (100–240 Vac, 110–220 Vdc) without any adjustment
- A high degree of output voltage stability (± 2% max)
- 3 versions from 0.3 A (7 w) to 1.2 A (30 w)
- All versions are 1.77" (45 mm) wide
- Output voltage adjustable from 90–110% of the nominal 24 Vdc (21.6–26.4 Vdc)
- Designed to accept stranded or solid wire and forked or ring tongued connectors
- LED indicating presence of the DC output voltage
- These power supplies can be either 35 mm DIN rail or panel mounted
- Designed for use in an indoor enclosure
- Large screw heads for easier wiring

These power supplies, which are accurate to within ± 2 % regardless of the load or the type of supply voltage, within the range of 85–264 Vac. The inclusion of overload and short circuit protection makes downstream protection unnecessary in most applications. All products have an output voltage adjustment potentiometer (21.6–26.4 %) which allows for compensation of any line voltage drop in installations with long runs.

The **ABL7CEM** products are excellent for typical automation, low power applications.

The **ABL7CEM** products are suitable for use in automation system environments based on the Nano and Twido PLCs or in any automation system configuration requiring a 24 Vdc supply.

© 2000-2004 Schneider Electric All Rights Reserved

ABL7RM Modular Switch Mode Power Supplies

The **ABL7RM** modular regulated switching power supplies are designed to provide the dc voltage necessary for equipment control circuits and meet the needs encountered in industrial, commercial, and residential applications. These single-phase, modular, electronic switching power supplies provide a quality of output current which is suitable for the loads supplied and compatible with the Zelio logic relays. Clear guidelines are given on selecting the upstream protection devices (see page 15) which are often used with them, thus providing a comprehensive solution.

Switching power supplies are totally electronic and regulated. The use of electronics makes it possible to significantly improve the performance of these power supplies, which offer:

- Compact size
- Integrated overload, short-circuit, over voltage and under voltage protection
- A very wide range of permitted input voltages (100–240 Vac), without any adjustment
- A high degree of output voltage stability
- Good performance
- Considerably reduced weight (0.40 lb.)
- A modular format allowing incorporation into control panels

These Phaseo™ power supplies deliver a voltage which is accurate within ± 3 or 4% depending on voltage, regardless of load and supply voltage, within a supply voltage range of 85–264 Vac. They are suitable for general use, are UL listed and CSA certified, and conform to IEC standards. The inclusion of overload and short-circuit protection makes downstream protection unnecessary if discrimination is not required.

The power supplies are equipped with an output voltage adjustment potentiometer allowing you to compensate for any line voltage drops in installations with long cable runs.

- 12 Vdc device 12–14.4 Vdc
- 24 Vdc device 24–28.8 Vdc

These power supplies are designed for direct mounting on 35 mm and 75 mm ⎓ DIN rail, or direct panel mounting by means of retractable mounting feet.

There are two single-phase power supplies available:

- **ABL7RM2401** (24 Vdc/1.3 A)
- **ABL7RM1202** (12 Vdc/1.9 A)

Description

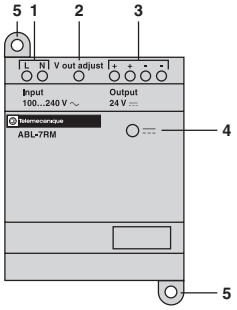

1. 2.5 mm^2 screw terminal for connection of the incoming ac supply voltage.
2. Output voltage adjustment potentiometer.
3. 2.5 mm^2 screw terminal for connection of the output voltage.
4. LED indicating presence of the dc output voltage.
5. Retractable mounting feet.

© 2000-2004 Schneider Electric All Rights Reserved

ABL7RE and ABL7RP Single Phase Switch Mode Power Supplies

The **ABL7RE** and **ABL7RP** single phase regulated switching power supplies are designed to provide the dc voltage necessary for most control system circuits. These power supplies are totally electronic and regulated. The use of electronics makes it possible to significantly improve the performance of these power supplies. They provide:

- Compact size
- Integrated overload, short circuit, over voltage and under voltage protection
- A wide range of permitted input voltages (100–240 Vac), without any adjustment
- A high degree of output voltage stability
- Good performance
- Considerably reduced weight in comparison to competition 1.15–4.85 lb. (0.52–2.19 kg)

These power supplies, which are accurate to within ± 3 % regardless of the load or the type of supply voltage, within the range of 85–264 Vac. The inclusion of overload and short circuit protection makes downstream protection unnecessary in most applications. They have an output under voltage control which will cause the power supply to trip if the output voltage of a 24 Vdc supply drops below 19 Vdc, to ensure that the voltage is always usable by the devices being supplied. All products have an output voltage adjustment potentiometer (24 to 28.8 V on a 24 Vdc supply) which allows for compensation of any line voltage drop in installations with long runs.

The **ABL7RE** products are excellent for typical industrial applications.

The **ABL7RP** products are for general purpose applications. These supplies have an input filter (Power Factor Correction or PFC) which allows them to be used in commercial environments. They have 2 operating modes:

"**AUTO**" mode which automatically restarts as soon as the fault is cleared.

"**MANU**" mode which requires the power supply to be reset before restarting is possible. Resetting is achieved by switching off the supply voltage and reapplying it.

Harmonics (Power Factor) – The current drawn by a power supply is non-sinusoidal. This leads to the existence of harmonic currents which pollute the main supply. European standard EN 61000-3-2 limits the harmonic currents produced by power supplies. This standard covers all devices of more the 75 W, drawing up to 16 A per phase, and connected directly to the utilities. Devices connected downstream of a private, low voltage, general transformer are excluded. However, switching power supplies produce harmonic current. Therefore, a filter circuit (PFC) must be added to the circuit when using an **ABL7RE** power supply to comply with standard EN 61000-3-2. The **ABL7RP** power supplies also conform to the EN 61000-3-2 standard and can be connected directly to the public power supply system.

Input LED—When illuminated, this LED indicates the supply voltage is present.

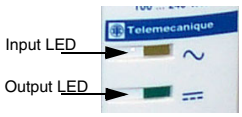

Output LED—This LED indicates if a fault has occurred.

Steady: normal voltage out

Flashing: overload or short circuit

© 2000-2004 Schneider Electric All Rights Reserved

ABL7UES AND ABL7UPS Three Phase Switch Mode Power Supplies

The **ABL7UES / UPS** three phase regulated switching power supplies are designed to provide the dc voltage necessary for most control system circuits. These power supplies are totally electronic and regulated. The use of electronics makes it possible to significantly improve the performance of these power supplies. They provide:

- Compact size
- Integrated overload, short circuit, over voltage and under voltage protection
- A wide range of permitted input voltages (400–520 Vac), without any adjustment
- A high degree of output voltage stability
- Good performance
- Considerably reduced weight in comparison to competition 2.87–9.92 lb. (1.3–4.5 kg)

These power supplies, which are accurate to within ± 1 % regardless of the load or the type of supply voltage, within the range of 3 x 400 to 520 Vac with power between 120 W (5 A) and 960 W (40 A). The inclusion of overload and short circuit protection makes downstream protection unnecessary in most applications. They have an output under voltage control which will cause the power supply to trip if the output voltage of a 24 Vdc supply drops below 19 Vdc, to ensure that the voltage is always usable by the devices being supplied. All products have an output voltage adjustment potentiometer (24 to 27.8 V) which allows for compensation of any line voltage drop in installations with long runs.

The **ABL7UES / UPS** products are excellent for typical industrial applications. These supplies have an input filter (Power Factor Correction or PFC) which allows them to be used in commercial environments. They have 2 operating modes:

"**AUTO**" mode which automatically restarts as soon as the fault is cleared.

"**MANU**" mode which requires the power supply to be reset before restarting is possible. Resetting is achieved by switching off the supply voltage and reapplying it.

The **ABL7UES / UPS** products are suitable for use in automation system environments based on the Premium and Quantum PLCs or in any automation system configuration requiring a 24 Vdc supply. They can be used in industrial applications, for all in-line or continuous process equipment, machine tools, and injection presses, etc.

© 2000-2004 Schneider Electric All Rights Reserved

ABL7RM

ABL7CEM

ABL7RE2405
ABL7RP2405
ABL7RP4803

ABL7UPS24200

Input Voltage 47 to 63 Hz	Output voltage	Nominal power	Nominal current	Automatic protection reset	Conforms to standard EN 61000-3-2	Catalog Number	Weight lb. (kg)
Single-phase Modular Regulated Switching Power Supplies ABL7RM							
100 to 240 Vac single-phase wide range	12 Vdc	22 W	1.9 A	auto	no	**ABL7RM1202**	0.4 (0.18)
	24 Vdc	30 W	1.3 A	auto	no	**ABL7RM2401**	0.4 (0.18)
Single-phase Regulated Switch Mode Power Supplies ABL7CEM							
100 to 240 Vac single-phase wide range 110 to 220 Vdc (1)	24 Vdc	7 W	0.3 A	auto	no	**ABL7CEM24003**	0.33 (0.15)
		15 W	0.6 A	auto	no	**ABL7CEM24006**	0.40 (0.18)
		30 W	1.2 A	auto	no	**ABL7CEM24012**	0.49 (0.22)
Single-phase Regulated Switch Mode Power Supplies ABL7RE							
100 to 240 Vac single-phase wide range	24 Vdc	48 W	2 A	auto	no	**ABL7RE2402**	1.15 (0.52)
		72 W	3 A	auto	no	**ABL7RE2403**	1.15 (0.52)
		120 W	5 A	auto	no	**ABL7RE2405**	2.20 (1.00)
		240 W	10 A	auto	no	**ABL7RE2410**	4.85 (2.20)
Single-phase Regulated Switch Mode Power Supplies ABL7RP							
100 to 240 Vac single-phase wide range 110 to 220 Vdc (1)	12 Vdc	60 W	5 A	auto/man	yes	**ABL7RP1205**	2.20 (1.00)
	24 Vdc	72 W	3 A	auto/man	yes	**ABL7RP2403**	1.15 (0.52)
		120 W	5 A	auto/man	yes	**ABL7RP2405**	2.20 (1.00)
		240 W	10 A	auto/man	yes	**ABL7RP2410**	4.85 (2.20)
	48 Vdc	144 W	3 A	auto/man	yes	**ABL7RP4803**	2.20 (1.00)
3-phase Regulated Switch Mode Power Supplies ABL7UES / UPS							
3 x 400 to 520 Vac	24 Vdc	120 W	5 A	auto/man	yes	**ABL7UES24050**	2.87 (1.30)
		240 W	10 A	auto/man	yes	**ABL7UPS24100**	2.87 (1.30)
		480 W	20 A	auto/man	yes	**ABL7UPS24200**	5.07 (2.30)
		960 W	40 A	auto/man	yes	**ABL7UPS24400**	9.92 (4.50)

(1) Compatible Vdc input voltage not indicated on the product.

ABL7RM
c UL us E164866 NRAQ
E164866 NRAQ7
CSA 203359 5311 05

ABL7CEM
c UL us E164867 NMTR
E164867 NMTR7

ABL7RE, RP
UL E164867 NMTR
CSA 204701 5311 03

ABL7UES, UPS
c UL us E164353 NKCR
E164353 NKCR7
CSA c us 1467190 5311 06
1467190 5311 86

All have:
CE

All except ABL7UES / UPS are SEMI F47 Compliant and

TÜV Rheinland Product Safety — BAUART GEPRÜFT TYPE APPROVED

© 2000-2004 Schneider Electric All Rights Reserved

Specifications

Catalog Number	ABL7RM1202	ABL7RM2401
Approvals	cULus, CSA, TÜV, CE	
Conforming to Standards	UL508, CSA 22.2 N° 950	
Safety	IEC / EN 60950 - IEC / EN 61131-2 / A11	
EMC	EN 50081-2, IEC 61000-6-2 (EN 50082-2)	

Input Circuit

Rated values	100 to 240 Vac	
Permissible values	85 to 264 Vac	
Permissible frequencies	47 to 63 Hz	
Efficiency at nominal load	> 80 %	
Current consumption	0.57 A @ 120 V / 0.37 A @ 240 V	0.74 A @ 120 V / 0.45 A @ 240 V
Current (inrush)	< 20 A	
Power factor	0.6	0.98

Output Circuit

LED indication	Green LED	
Nominal output voltage	12 Vdc	24 Vdc
Nominal output current	1.9 A	1.3 A
Precision		
Output voltage	Adjustable, from 100 to 120 %	
Line and load regulation	± 4 %	± 3 %
Residual ripple - interference	< 200 mV	< 250 mV
Micro-breaks		
Holding time at I max and Ve min	> 10 ms	
Protection		
Short-circuit	Permanent / thermal protection	
Overcurrent, cold-state	< 1.7 A	< 1.6 A
Undervoltage	< 10.5 V	< 19 V

Characteristics

Connections	
Input	1 - #14 AWG (1 x 2.5 mm^2) or 2 - #16 AWG (2 x 1.5 mm^2) screw terminals
Output	1 - #14 AWG (1 x 2.5 mm^2) or 2 - #16 AWG (2 x 1.5 mm^2) screw terminals
Tightening torque	5.4 lb-in (0.6 N•m)
Environment	
Storage Temperature	-13 to 158 °F (- 25 to +70 °C)
Operating Temperature	-13 to 131 °F (-25 to +55 °C)
Maximum Relative Humidity	95%
Degree of Protection	IP20 conforming to IEC 60529
Vibrations	Conforming to EN 61131-2, IEC 60068-2-6 test Fc
Operating position	Vertical
Connections	
Serial	Not Possible
Parallel	Possible (same references)
Dielectric strength	
Input / output	3000 V / 50 / 60 Hz / 1 min.
Protection class conforming to VDE 0106 1	Class II without ground terminal (double insulated)
Input fuse incorporated	Yes (internal, not replaceable)
Emissions	EN 50081-2 (Generic)
Conducted / radiated	EN 55011 / EN 55022 cl.B
Immunity	IEC 61000-6-2 (Generic)
Electrostatic Discharge	EN 61000-4-2 (4 kV contact / 8 kV air)
Electromagnetic	EN 61000-4-3 level 3 (10 V / m)
Conducted Interference	EN 61000-4-4 level 3 (2 kV), EN 61000-4-6 (10 V)
Supply Interference	EN 1000-4-11

© 2000-2004 Schneider Electric All Rights Reserved

Specifications

Catalog Number	ABL7CEM	ABL7RE	ABL7RP
Approvals	cULus, TÜV, CE	UL, CSA, TÜV, CTick , CE	UL, CSA, TÜV, CTick , CE
Conforming to standards	UL 508	UL 508, CSA 22.2 n° 950	UL 508, CSA 22.2 n° 950
Safety	IEC / EN 60950		
EMC	EN 50081-2, EN 50082-2	EN 50081- 2, IEC 61000-6-2 (EN 50082-2)	
Low frequency harmonic currents	No	No	EN 61000-3-2

Input Circuit

LED indication	None	Orange LED	Orange LED
Input voltages			
Rated values	100 to 240 Vac, 110 to 220 Vdc compatible (1)	100 to 240 Vac	100 to 240 Vac, 110 to 220 Vdc compatible (1)
Permissible values	85 to 264 Vac, 105 to 370 Vdc compatible (1)	85 to 264 Vac single-phase	85 to 264 Vac, 100 to 250 Vdc compatible (1)
Permissible frequencies	47 to 63 Hz		
Efficiency at nominal load	> 70 %	> 85 %	
Current consumption Ue = 240 V	0.1 A (7 W) / 0.2 A (15 W) / 0.45 A (30 W)	0.7 A (48 W) / 0.9 A (72 W) 1.4 A (120 W) / 2.5 A (240 W)	0.5 A (60 W) / 0.5 A (72 W) / 0.7 A (120 W) / 0.7 A (144 W) / 1.4 A (240 W)
Current consumption Ue = 120 V	0.15 A (7 W) / 0.26 A (15 W) / 0.59 A (30 W)	1.13 A (48 W) / 1.57 A (72 W) 2.44 A (120 W) / 4.35 A (240 W)	0.78 A (60 W) / 0.87 A (72 W) / 1.39 A (120 W) / 1.39 A (144 W) / 2.78 A (240 W)
Current at switch-on	< 50 A	< 30 A	
Power factor	0.45 approx.	0.65 approx.	0.98 approx.

Output Circuit

LED indication	Green LED	Green LED	Green LED
Nominal output voltage (U out)	24 Vdc		12, 24 and 48 Vdc
Nominal output current	0.3 A / 0.6 A / 1.2 A	2 A / 3 A / 5 A / 10 A	3 A / 5 A / 10 A
Output voltage	Adjustable, from 90 to 110 %	Adjustable, from 100 to 120 %	
Line and load regulation	2 % max.	± 3 %	
Residual ripple - interference	< 200 mV (peak-peak)		
Micro-breaks			
Holding time at I max and Ve min.	> 20 ms	> 10 ms	> 20 ms
Temporary overloads	Permissible inrush current (U out >19 V) (See curves page 16)		
Short-circuit protection	Permanent / automatic restart	Permanent / automatic restart	Permanent / automatic restart or manual restart on product
Overload protection	1.05 In	1.1 In	
Overvoltage protection	U > 1.2	Tripping if U > 1.5 Un	
Undervoltage protection	–	Tripping if U < 0.8 Un	

Characteristics

Input connection	2 - #14 AWG (2 x 2.5 mm^2)+ ground	
Output connection	2 - #14 AWG (2 x 2.5 mm^2)	2 - #14 AWG (2 x 2.5 mm^2)+ ground, multiple output, depending on model
Tightening torque	7.0 lb-in (0.8 N•m)	5.4 lb-in (0.6 N•m)
Storage temperature	- 13 to + 158 °F (- 25 to + 70 °C)	
Operating temperature	14 to + 140 °F (- 10 to + 60 °C) derating as from 122 °F (50 °C), mounted vertically	- 32 to + 140 °F (0 to + 60 °C) derating as from 122 °F (50 °C), mounted vertically
Maximum relative humidity	20 to 90 %	95 % without condensation or dripping water
Degree of protection	IP 20 conforming to IEC 60529	
Vibrations	Conforming to EN 61131-2	
Operating position	Vertical and horizontal (see p. 13)	Vertical
MTBF at 40 °	> 100 000 h	
Series connection	Possible	
Parallel connection	No	Possible - maximum temperature 122 °F (50 °C)
Dielectric strength		
Input / output	3000 V / 50 Hz 1 min.	3000 V / 50 Hz 1 min.
Input / ground	2000 V / 50 Hz 1 min.	3000 V / 50 Hz 1 min.
Output / ground (and output / output)	500 V / 50 Hz 1 min.	500 V / 50 Hz 1 min.
Input fuse incorporated	Yes (internal, not replaceable)	
Emissions	EN 50081-1 (Generic)	
Conducted	EN 55011 / EN 55022 cl.A (7 &15 W) EN 55011 / EN 55022 cl.B (30 W)	EN 55011 / EN 55022 cl.B
Radiated	EN 55011 / EN 55022 cl.B	
Immunity	IEC 61000-6-2 (Generic)	
Electrostatic discharge	EN 61000-4-2 (4 kV contact / 8 kV air)	
Electromagnetic	EN 61000-4-3 level 3 (10 V / m)	
Conducted interference	EN 61000-4-4 level 3 (2 kV), EN 61000-4-5, EN 61000-4-6 level 3, EN 61000-4-8 level 4.	
Supply interference	EN 1000-4-11 (Voltage drops and cuts)	

(1) Vdc compatible input voltage, not indicated on the product.

© 2000-2004 Schneider Electric All Rights Reserved

Specifications

Catalog Number	**ABL7UES24050, ABL7UPS24●**
Approvals	cULus, cCSAus, CE
Conforming to standards	UL508
Safety	EN 60950, FELV
EMC	EN 50081-1, EN 50082-2
Low frequency harmonic currents	EN 61000-3-2
Input Circuit	
LED indication	None
Input voltages	
Rated values	3 x 400 to 520 Vac
Permissible values	3 x 340 to 550 Vac
Permissible frequencies	50 to 60 Hz
Efficiency at nominal load	> 90 %
Current consumption (Ue = 400 V)	0.33 A @ 120 W / 0.65 A @ 240 W / 1.2 A @ 480 W / 1.7 A @ 960 W
Current at switch-on	< 15 A
Power factor	0.7 @ 120 W / 0.7 / 0.9 @ 960 W
2-phase operating mode	Relaxation if input voltage < 450 Vac
Output Circuit	
LED indication	Green LED
Nominal output voltage (U out)	24 Vdc
Nominal output current	5 / 10 / 20 / 40 A
Output voltage	Adjustable 100 to 116 %
Line and load regulation	1 % max.
Residual ripple - interference	< 200 mV (peak-peak)
Micro-breaks	
Holding time at I max and Ve min.	between 8 and 13 ms
Temporary overloads	
Permissible inrush current (U out > 19 V)	See curves, page 16
Short-circuit protection	Permanent / automatic or normal restart
Overload protection	1.05 In < 50 ms
Overvoltage protection	28.5 V typical
Undervoltage protection	19 V typical
Characteristics	
Input connection	2 - #16-14 AWG (2 x 1.5 to 2.5 mm^2) + ground
Output connection	
UES24050, UPS24100	2 - #16-14 AWG (2 x 1.5 to 2.5 mm^2)
UPS24200	2 - #12-10 AWG (2 x 4 to 6 mm^2)
UPS24400	2 - #12-8 AWG (2 x 4 to 10 mm^2)
Tightening torque	
UES24050, UPS24100	Input: 5.4 lb-in (0.6 N•m) / Output: 4.5 lb-in (0.5 N•m)
UPS24200	Input: 5.4 lb-in (0.6 N•m) / Output: 5.4 lb-in (0.6 N•m)
UPS24400	Input: 5.4 lb-in (0.6 N•m) / Output: 10.8 lb-in (1.2 N•m)
Ambient conditions	
Storage temperature	-13 to + 158 °F (- 25 to + 70 °C)
Operating temperature	32 to + 140 °F (0 to + 60 °C)
Humidity relative maximal	30 to 90 %
Degree of protection	IP 20
Vibrations	Conforming to EN 61131-2
Operating position	Vertical
MTBF	> 100 000 h
Series connection	Possible - 2 power supplies max.
Parallel connection	Possible - 2 power supplies max.
Dielectric strength	
Input / output	3750 V / 50 and 60 Hz 1 mn
Input / ground	3500 V / 50 and 60 Hz 1 mn
Output / ground (and output / output)	500 V / 50 and 60 Hz 1 mn
Input fuse incorporated	No
Emissions	
Conducted / radiated	EN 55011 / EN 5022 - Class B
Immunity	
Electrostatic discharge	EN 61000-4-2 (4 kV contact / 8 kV air)
Electromagnetic	EN 61000-4-3 level 3 (10 V / m)
Conducted interference	EN 61000-4-4 level 3 (2 kV), EN 61000-4-5, EN 61000-4-6 level 3, EN 61000-4-8 level 4
Supply interference	EN 61000-4-11 (Voltage drops and cuts)

© 2000-2004 Schneider Electric All Rights Reserved

DERATING ABL7RM POWER SUPPLIES

The ambient temperature is a determining factor which limits the power that an electronic power supply can deliver continuously. If the temperature around the electronic components is too high, their life will be significantly reduced. Conversely, a power supply can deliver more than its rated power if the ambient temperature remains well below the nominal operating temperature.

The maximum ambient temperature for Phaseo™ power supplies is 131 °F (55 °C). Below this temperature, it is possible to receive up to 110 % of the nominal power.

The graph below shows the power (in relation to the nominal power) which the power supply can deliver continuously, according to the ambient temperature.

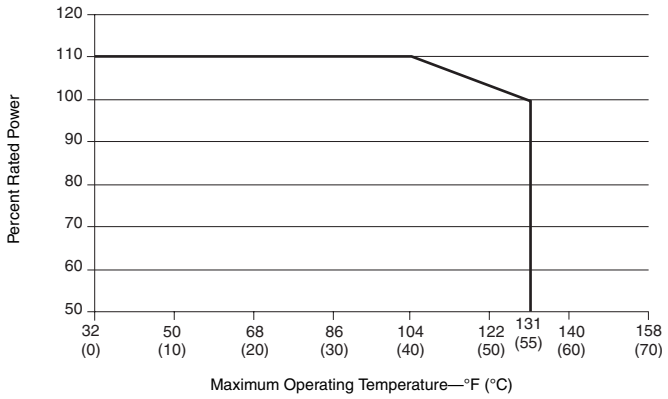

Derating should also be considered in the following extreme operating conditions:

— Intensive operation (output current permanently close to the nominal current, combined with a high ambient temperature)

— output voltage set above 24 V (to compensate for line voltage drops, for example)

— parallel connection to increase the total power

© 2000-2004 Schneider Electric All Rights Reserved

DERATING ABL7CEM, RE, RP, UES, AND UPS

The ambient temperature is a determining factor which limits the power that an electronic power supply can deliver continuously. A temperature which is too high around the electronic components significantly reduces their life. However, if the ambient temperature remains largely below the rated operating temperature, then a power supply can deliver more than its nominal power.

The rated ambient temperature for Phaseo™ power supplies is 122 °F (50 °C). Above 122 °F (50 °C), a derating is necessary up to a maximum temperature of 140 °F (60 °C).

The graph below shows the power (in relation to the nominal power) which the power supply unit can deliver continuously, according to the ambient temperature.

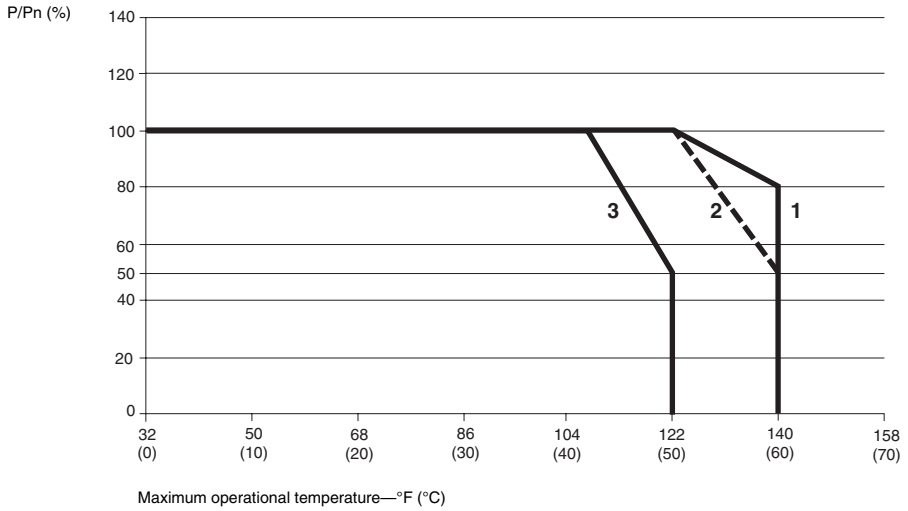

1. ABL7RE, ABL7RP, ABL7UES, ABL7UPS vertical mounting
2. ABL7CEM vertical mounting
3. ABL7CEM horizontal mounting

Derating should be considered in the following extreme operating conditions:

- intensive operation (output current permanently close to the nominal current, combined with a high ambient temperature),
- output voltage set above 24 V (to compensate for line voltage drops, for example),
- parallel connection to increase the total power.

General rules to be followed

Intensive operation	See derating information on the graph above. Example for ABL7RE: - without derating, from 32 °F to 122 °F (0 °C to 50 °C), - derating of nominal current by 2 % per additional °C, up to 140 °F (60 °C).
Rise in output voltage	The nominal power is fixed. Increasing the output voltage means that the current delivered must be reduced.
Parallel connection to increase the power (except ABL7CEM)	The total power is equal to the sum of the powers of the power supplies used, but the maximum ambient temperature for operation is 122 °F (50 °C) To improve heat dissipation, the power supplies must not be in contact with each other.

In all cases, there must be adequate convection around the products to ensure proper cooling.

	Required Clearances	
	Above and Below	**On Both Sides**
ABL7CEM	–	0.39 (10 mm)
ABL7RE, RP	1.96 (50 mm)	0.59 (15 mm)
ABL7UES / UPS	3.93 (100 mm)	3.93 (100 mm)

© 2000-2004 Schneider Electric All Rights Reserved

USING 24 Vdc

- Using 24 Vdc enables so-called protection installations (PELV) to be built. Using PELV is a measure designed to protect people from direct and indirect contact. Measures relating to these installations are defined in publication NF C 12-201 and in standard IEC 60364-4-41.
- The application of these measures to the electrical equipment in machines is defined in standard NF EN 60204-1 and requires:
  - — the voltage used is below 60 Vdc in dry environments and below 30 V in damp environments,
  - — the connection of one side of the PELV circuit, or one point of the source, to the equipotential protection circuit associated with higher voltages.
  - — the use of switchgear and control gear on which measures have been taken to ensure “safety separation” between power circuits and control circuits.
- A safety separation is necessary between power circuits and control circuits in PELV circuits. Its aim is to warn of the appearance of dangerous voltages in 24 Vdc safety circuits.
- The reference standards involved are:
  - — IEC 61558-2-6 and EN 61558-2-6 (safety transformers),
  - — IEC 60664 (coordination of isolation).

  Telemecanique power supplies meet these requirements.
- Moreover, to ensure that these products will operate correctly in relation to the demands of their reinforced isolation, it is recommended that they be mounted and wired as indicated below:
  - — they should be placed on a grounded mounting plate or rail,
  - — they should be connected using flexible wires, with a maximum of two wires per connection, and tightened to the nominal torque,
  - — conductors of the correct insulation class must be used.
- If the dc circuit is not connected to an equipotential protection conductor, an ground leakage detector will indicate any accidental insulation faults.

OPERATING VOLTAGE

- The permissible tolerances for the operating voltage are listed in publications IEC 61131-2 and DIN 19240.
- For nominal voltage Un = 24 Vdc, the extreme operating values are from - 15 % to + 20 % of Un, whatever the supply fluctuations in the range - 10 % to + 6 % (defined by standard IEC 60038) and load variations in the range 0–100 % of In. All Telemecanique 24 Vdc power supplies are designed to provide a voltage within this range.
- It may be necessary to use a voltage measurement relay to detect when the normal voltage limits are being surpassed and to deal with the consequences of this.

© 2000-2004 Schneider Electric All Rights Reserved

PROTECTION DEVICES

For ABL7CEM, ABL7RE, ABL7RP, AND ABL7RM

For Use With	120 Vac Single-phase					240 Vac Single-phase				
	Input Current	Poles	Thermal-Magnetic Circuit-Protector		gG Fuse	Input Current	Poles	Thermal-Magnetic Circuit-Protector		gG Fuse
			GB2	C60N				GB2	C60N	
ABL7CEM24003	0.15 A	1	GB2CB05 (0.5 A)	MG17421 (0.5 A)	1 A	0.1 A	1	GB2CB05 (0.5 A)	MG17421 (0.5 A)	1 A
		2	GB2CD05 (0.5 A)	MG24516 (1.0 A)			2	GB2CD05 (0.5 A)	MG24516 (1.0 A)	
ABL7CEM24006	0.26 A	1	GB2CB05 (0.5 A)	MG17421 (0.5 A)	1 A	0.2 A	1	GB2CB05 (0.5 A)	MG17421 (0.5 A)	1 A
		2	GB2CD05 (0.5 A)	MG24516 (1.0 A)			2	GB2CD05 (0.5 A)	MG24516 (1.0 A)	
ABL7CEM24012	0.59 A	1	GB2CB06 (1.0 A)	MG24500 (1.0 A)	1 A	0.45 A	1	GB2CB06 (1.0 A)	MG24500 (1.0 A)	1 A
		2	GB2CD06 (1.0 A)	MG24516 (1.0 A)			2	GB2CD06 (1.0 A)	MG24516 (1.0 A)	
ABL7RE2402	1.13 A	1	GB2CB07 (2.0 A)	MG24501 (2.0 A)	2 A	0.7 A	1	GB2CB06 (1.0 A)	MG24500 (1.0 A)	1 A
		2	GB2CD07 (2.0 A)	MG24517 (2.0 A)			2	GB2CD06 (1.0 A)	MG24516 (1.0 A)	
ABL7RE2403	1.57 A	1	GB2CB07 (2.0 A)	MG24501 (2.0 A)	2 A	0.90 A	1	GB2CB06 (1.0 A)	MG24500 (1.0 A)	1 A
		2	GB2CD07 (2.0 A)	MG24517 (2.0 A)			2	GB2CD06 (1.0 A)	MG24516 (1.0 A)	
ABL7RE2405	2.44 A	1	GB2CB08 (3.0 A)	MG24502 (3.0 A)	4 A	1.4 A	1	GB2CB07 (2.0 A)	MG24501 (2.0 A)	2 A
		2	GB2CD08 (3.0 A)	MG24517 (3.0 A)			2	GB2CD07 (2.0 A)	MG24517 (2.0 A)	
ABL7RE2410	4.35 A	1	GB2CB12 (6.0 A)	MG24504 (6.0 A)	6 A	2.5 A	1	GB2CB08 (3.0 A)	MG24502 (3.0 A)	4 A
		2	GB2CD12 (6.0 A)	MG24520 (6.0 A)			2	GB2CD08 (3.0 A)	MG24517 (3.0 A)	
ABL7RP1205	0.78 A	1	GB2CB06 (1.0 A)	MG24500 (1.0 A)	2 A	0.5 A	1	GB2CB06 (1.0 A)	MG24500 (1.0 A)	1 A
		2	GB2CD06 (1.0 A)	MG24516 (1.0 A)			2	GB2CD06 (1.0 A)	MG24516 (1.0 A)	
ABL7RP2403	0.87 A	1	GB2CB07 (2.0 A)	MG24501 (2.0 A)	2 A	0.5 A	1	GB2CB06 (1.0 A)	MG24500 (1.0 A)	1 A
		2	GB2CD07 (2.0 A)	MG24517 (2.0 A)			2	GB2CD06 (1.0 A)	MG24516 (1.0 A)	
ABL7RP2405	1.39 A	1	GB2CB07 (2.0 A)	MG24501 (2.0 A)	2 A	0.7 A	1	GB2CB06 (1.0 A)	MG24500 (1.0 A)	1 A
		2	GB2CD07 (2.0 A)	MG24517 (2.0 A)			2	GB2CD06 (1.0 A)	MG24516 (1.0 A)	
ABL7RP2410	2.78 A	1	GB2CB09 (4.0 A)	MG24503 (4.0 A)	4 A	1.4 A	1	GB2CB07 (2.0 A)	MG24501 (2.0 A)	2 A
		2	GB2CD09 (4.0 A)	MG24519 (4.0 A)			2	GB2CD07 (2.0 A)	MG24517 (2.0 A)	
ABL7RP4803	1.39 A	1	GB2CB07 (2.0 A)	MG24501 (2.0 A)	2 A	0.7 A	1	GB2CB06 (1.0 A)	MG24500 (1.0 A)	1 A
		2	GB2CD07 (2.0 A)	MG24517 (2.0 A)			2	GB2CD06 (1.0 A)	MG24516 (1.0 A)	
ABL7RM1202	0.57 A	1	GB2CB06 (1.0 A)	MG24500 (1.0 A)	1 A	0.37 A	1	GB2CB05 (0.5 A)	MG17421 (0.5 A)	1 A
		2	GB2CD06 (1.0 A)	MG24516 (1.0 A)			2	GB2CD05 (0.5 A)	MG24516 (1.0 A)	
ABL7RM2401	0.74 A	1	GB2CB06 (1.0 A)	MG24500 (1.0 A)	1 A	0.45 A	1	GB2CB06 (1.0 A)	MG24500 (1.0 A)	1 A
		2	GB2CD06 (1.0 A)	MG24516 (1.0 A)			2	GB2CD06 (1.0 A)	MG24516 (1.0 A)	

For ABL7UES and ABL7UPS

For Use With	400 to 520 Vac Three-phase			
	Input Current	Thermal-Magnetic Supplementary Protector		gG Fuse
		GV2ME	C60N	
ABL7UES24050	3 x 0.33 A	GV2ME08 (2.5–4 A)	MG24533 (2 A)	2 A
ABL7UPS24100	3 x 0.65 A	GV2ME08 (2.5–4 A)	MG24533 (2 A)	2 A
ABL7UPS24200	3 x 1.2 A	GV2ME08 (2.5–4 A)	MG24534 (3 A)	3 A
ABL7UPS24400	3 x 1.7 A	GV2ME08 (2.5–4 A)	MG24535 (4 A)	4 A

Wiring

GB2-CB **GB2-CD**

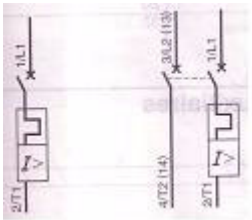

Telemecanique
© 2000-2004 Schneider Electric All Rights Reserved

OUTPUT CHARACTERISTICS

Load Limit

ABL7CEM24●●●

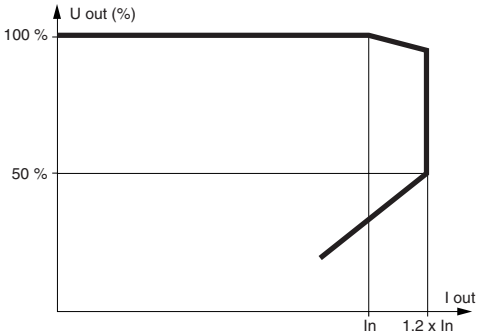

ABL7RE24●●/ABL7RP●●●● and ABL7UES / UPS24●●

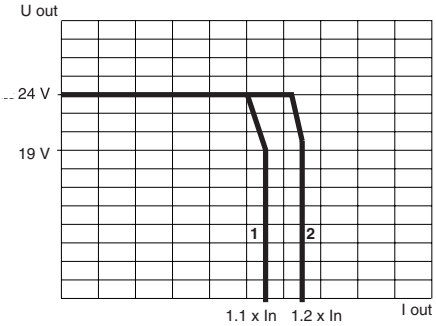

1 ABL7RE24●●/ABL7RP●●●●
2 ABL7UPS24●●

Temporary Overloads

ABL7CEM

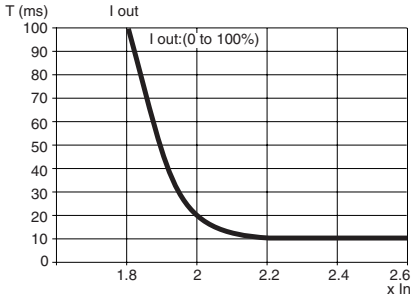

ABL7RE/ABL7RP

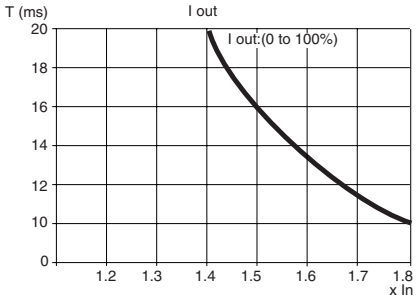

ABL7UES / UPS

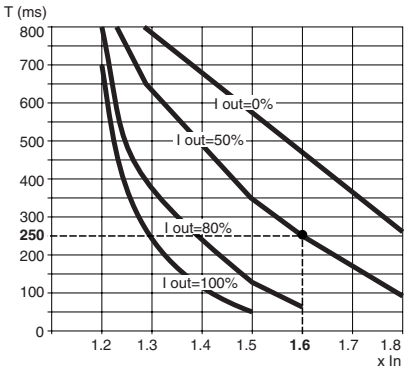

Example: For an ABL7UES / UPS24●●● power supply, 50 % loaded (I out = 50 %), this power supply can withstand a current peak of 1.6 x In for 250 ms with an output voltage ⩾19 V.

Series or Parallel Connection

Series connection

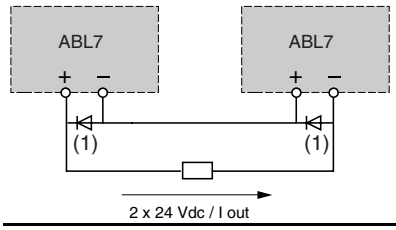

Parallel connection

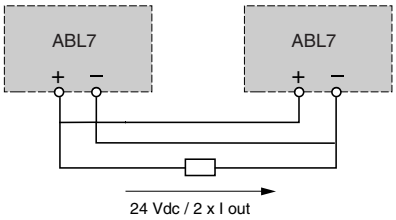

Family	Series	Parallel
ABL7CEM	2 products max (1)	Not possible
ABL7RE/RP	2 products max	2 products max
ABL7UES / UPS	2 products max	2 products max

(1) 2 Schottky diodes, 2 A/100 V, on ABL7CEM only.

Telemecanique
© 2000-2004 Schneider Electric All Rights Reserved

ABL7RM●●●●

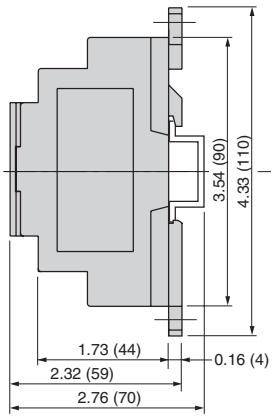

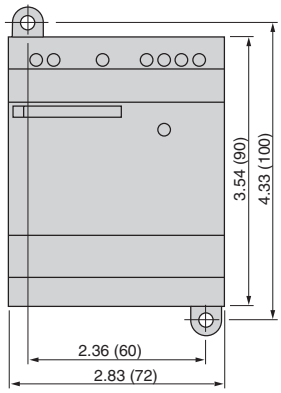

Dual Dimensions = $\frac{\text{in}}{\text{mm}}$

ABL7RE24●●/ABL7RP●●●●

Common side view

Mounting on 35 and 75 mm rails

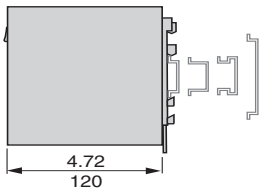

ABL7RE2402/2403
ABL7RP2403

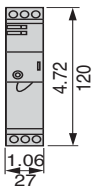

ABL7RE2405
ABL7RP1205/2405/4803

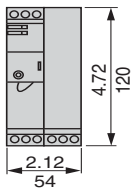

ABL7RE2410
ABL7RP2410

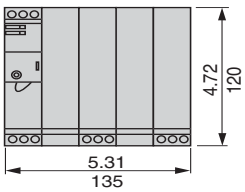

ABL7CEM24●●●
ABL7CEM24003

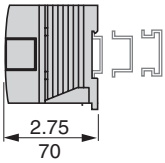

Panel mounting

ABL7CEM24006/
ABL7CEM24012

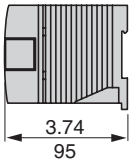

Common front view

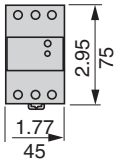

ABL7UES24050
ABL7UPS24100

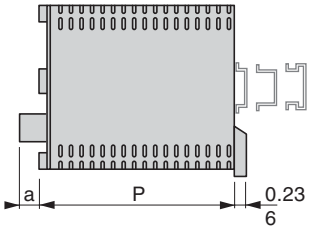

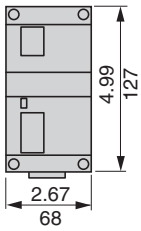

2 x M4 or 2 x Ø4.5

ABL7UPS24400

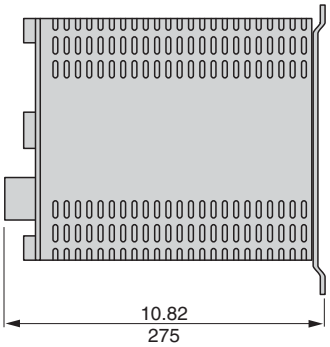

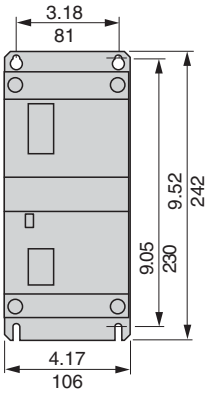

ABL7UPS24200

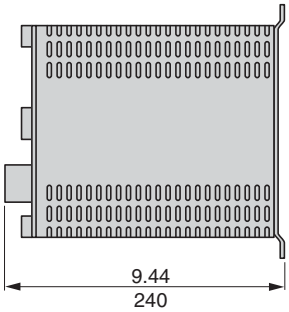

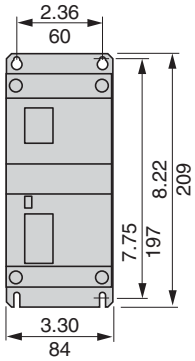

Telemecanique
© 2000-2004 Schneider Electric All Rights Reserved

ABL7RE2402/2403

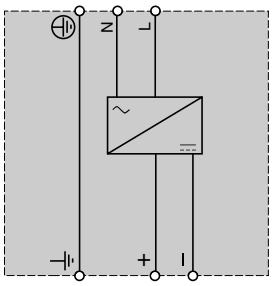

ABL7RE2405

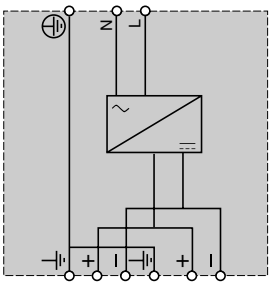

ABL7RE2410

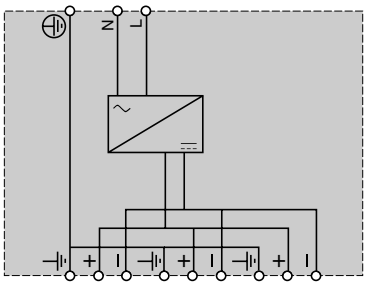

ABL7RP2403

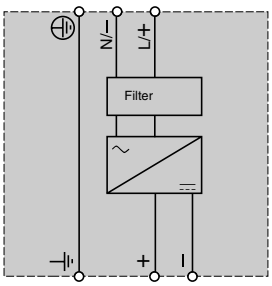

ABL7RP1205/2405/4803

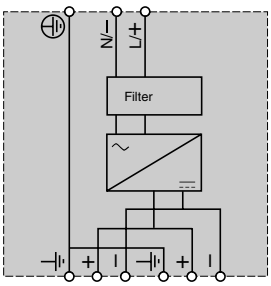

ABL7RP2410

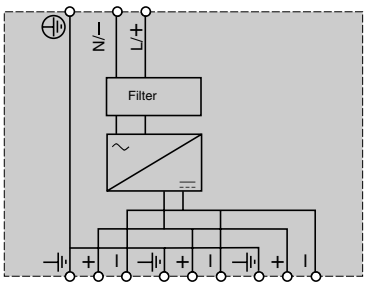

ABL7CEM24●●●

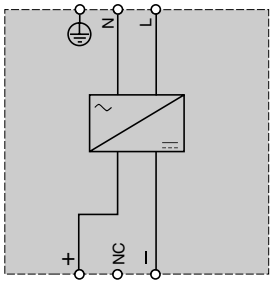

ABL7RM●●●●

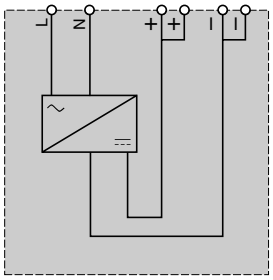

ABL7UES / UPS●●●●●

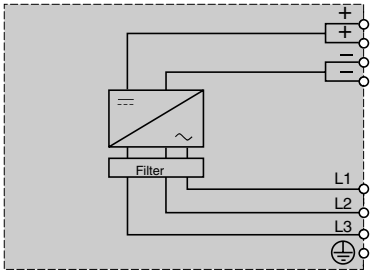

© 2000-2004 Schneider Electric All Rights Reserved

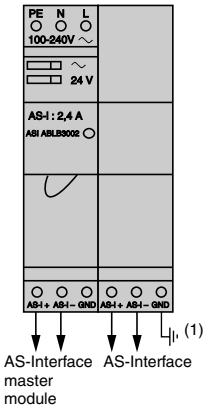

ASIABLB300●

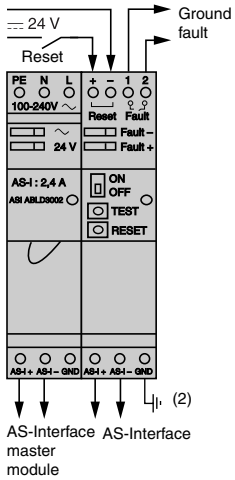

ASIABLD300●

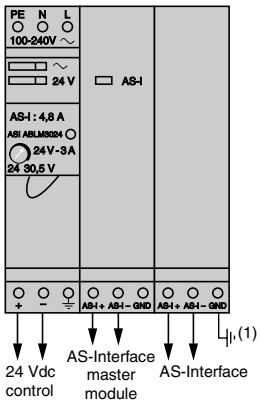

ASIABLM3024

(1) Recommended connection.
(2) Required connection.

POWER SUPPLIES FOR AS-INTERFACE

Consistent with the standard Phaseo™ line, the range of **ASIABL** power supplies is designed to deliver a dc voltage, as required by networks operating under the AS-Interface protocol. Three versions are available to meet all needs encountered in industrial applications, in enclosures, cells or floor-standing enclosures. These single-phase, electronic, switch mode power supplies guarantee the quality of the output current, in accordance with the electrical characteristics and conforming to standard EN 50295.

ASIABLB300●

Operating on a 100 to 240 Vac supply, this power supply delivers a voltage of 30 Vdc available in 2.4 and 4.8 A ratings. The parallel output terminal blocks allow the bus to be connected separately to the slaves and the master. Input and output LEDs allow fast and continuous diagnostics.

ASIABLD300●

Operating on a 100 to 240 Vac supply, this power supply delivers a voltage of 30 Vdc available in 2.4 and 4.8 A ratings, and allows diagnosis and management of ground faults on AS-Interface networks. In the event of an ground fault, the Phaseo™ power supply trips out, thus stopping dialogue on the bus. Restarting is only possible after deliberate acknowledgement of the fault. Two I/O ports are provided, which may be used to monitor status. The parallel output terminal blocks are used to connect the bus separately to the slaves and the AS-Interface master. Input, output and fault LED's allow fast and continuous diagnostics.

ASIABLM3024

Operating on a 100 to 240 Vac supply, this product delivers two dc outputs which are totally independent in the way they operate. Two output voltages - 30 Vdc/2.4 A (AS-Interface supply) and 24 Vdc/3 A - are available, making it possible to supply the control equipment without an additional power supply. Input and output LEDs allow fast and continuous diagnostics.

Regulated Switch Mode Power Supplies ASIABL

Input Voltage 47 to 63 Hz	Output voltage	Nominal power	Nominal current	Automatic protection reset	Ground fault detection	Catalog number	Weight lb. (kg)
100 to 240 V single-phase wide range	30 Vdc	72 W	2.4 A	auto	no	**ASIABLB3002**	1.76 (0.80)
		145 W	4.8 A	auto	no	**ASIABLB3004**	2.87 (1.30)
		72 W	2.4 A	auto	yes	**ASIABLD3002**	1.76 (0.80)
		145 W	4.8 A	auto	yes	**ASIABLD3004**	2.87 (1.30)
	30 + 24 Vdc	2 x 72 W	2.4 + 3 A	auto	no	**ASIABLM3024**	2.87 (1.30)

File E164867
CCN NMTR

File 204701
Class 5311 03

CE

TÜV Rheinland Product Safety
BAUART GEPRÜFT
TYPE APPROVED

© 2000-2004 Schneider Electric All Rights Reserved

Technical Specifications

Catalog Number	ASIABLB3002	ASIABLB3004	ASIABLD3002	ASIABLD3004	ASIABLM3024
Functions	Supply to the AS-Interface system				24 Vdc supply
Approvals	UL 508, CSA 22-2 n° 950, CE, TUV				
Conforming to standards					
Safety	EN 60950, TÜV				
EMC	EN 50081-1, IEC 61000-6-2, EN 55022 class B				
Low frequency harmonic currents	No				
Input circuit					
LED indication	Yellow LED				
Input voltage					
Rated values	100 to 240 Vac				
Permissible values	85 to 264 Vac				
Permissible frequencies	47 to 63 Hz				
Efficiency at nominal load	> 83 %				> 80 %
Current consumption	0.5	1	0.5	1	1
Current at switch-on	< 30 A				
Power factor	> 0.65				
Output circuit					
LED indication	Green LED				
Nominal output voltage	30 Vdc (AS-Interface)				24 Vdc
Nominal output current	2.4	4.8	2.4	4.8	2.4	3
Precision					
Adjustable output voltage	–				100 to 120 %
Line and load regulation	3 %				
Residual ripple - interference	300–50 mV				
Micro-breaks					
Holding time for I max and Ve min.	10 ms				
Protection					
Short-circuit	Permanent/automatic restart after elimination of the fault				
Overload	1.1 In				
Overvoltage	Tripping if U > 1.2 Un				U > 1.5 Un
Undervoltage	Tripping if U < 0.95 Un				U < 0.8 Un

Operating characteristics

Connections	
Input	2-#14 AWG (2 x 2.5 mm^2) screw terminals + ground
Output	2-#14 AWG (2 x 2.5 mm^2) screw terminals + ground, multiple output
Tightening torque	5.4 lb-in (0.6 N•m)
Environment	
Storage temperature	- 13 to + 158 °F (- 25 to + 70 °C)
Operating temperature	32 to 140 °F (0 to + 60 °C) derating 122 °F (50 °C)
Maximum relative humidity	95 % (without condensation or dripping water)
Degree of protection	IP 20 (conforming to IEC 60529)
Vibration	EN 61131-2
Operating position	Vertical
MTBF	> 100000 h conforming to Bell core, at 104 °F (40 °C)
Dielectric strength	
Input/output	3000 V/50 Hz/1 mm
Input/ground	3000 V/50 Hz/1 mm
Output/ground (and input/output)	500 V/50 Hz/1 mm
Input fuse incorporated	Yes (not interchangeable)
Emissions	
Conducted/radiated	Class B (conforming to EN 55022)
Immunity	
Electrostatic discharge	EN 61000-4-2 (4 kV contact/8 kV air)
Electromagnetic	EN 61000-4-3 level 3 (10 V/m)
Conducted interference	EN 61000-4-4 level 3 (2 kV), EN 61000-4-6 (10 V)
Supply interference	EN 61000-4-11

© 2000-2004 Schneider Electric All Rights Reserved

DERATING

The ambient temperature is a determining factor which limits the power that an electronic power supply can deliver continuously. If the temperature around the electronic components is too high, their life will be significantly reduced.

The graph below shows the power (in relation to the nominal power) which the power supply can deliver continuously, according to the ambient temperature.

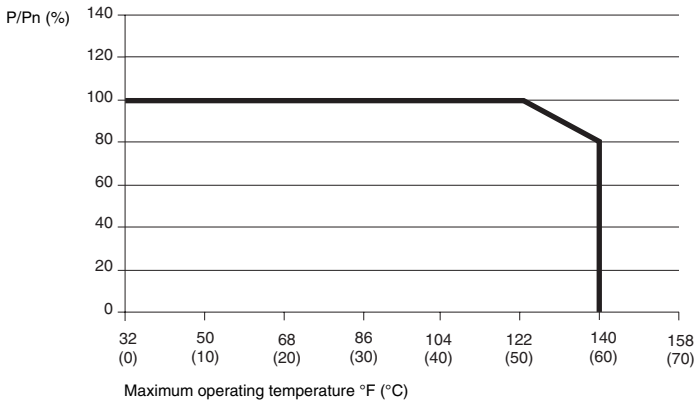

PROTECTION DEVICES

For AS-Interface System

Power Supply	115 Vac single-phase			230 Vac single-phase		
Type of protection	**Thermal-magnetic circuit-protector**		**Gg fuse**	**Thermal-magnetic circuit-protector**		**Gg fuse**
Single-pole	GB2 CB●●					
2-pole	GB2 DB●●	C60N		GB2 DB●●	C60N	
ASIABLB3002	GB2 ●B07	MG24517 *(1)*	2 A	GB2 DB06	MG24516 *(1)*	2 A
ASIABLB3004	GB2 ●B08	MG24518 *(1)*	4 A	GB2 DB07	MG17453 *(1)*	2 A
ASIABLD3002	GB2 ●B07	MG24517 *(1)*	2 A	GB2 DB06	MG24516 *(1)*	2 A
ASIABLD3004	GB2 ●B08	MG24518 *(1)*	4 A	GB2 DB07	MG17453 *(1)*	2 A
ASIABLM3024	GB2 ●B07	MG24517 *(1)*	2 A	GB2 DB06	MG17453 *(1)*	2 A

(1) UL listed circuit-breaker.

There must always be adequate convection around the power supply to ensure proper cooling. There must be a clear space of 1.96" (50 mm) above and below the power supply and 0.59" (15 mm) on both sides.

© 2000-2004 Schneider Electric All Rights Reserved

Function Diagram

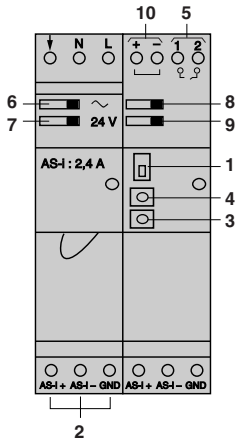

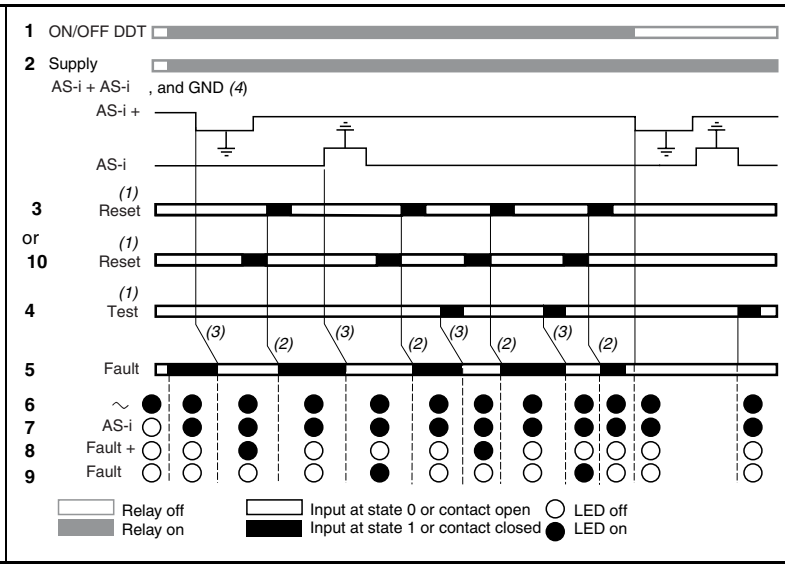

(1) 30 ms min.
(2) 15 ms.
(3) 20 ms.
(4) NOTE: The ground fault detector will only operate if the ground (GND) terminal is connected.

Dimensions

Common side view
Mounting on 35 and 75 mm rails

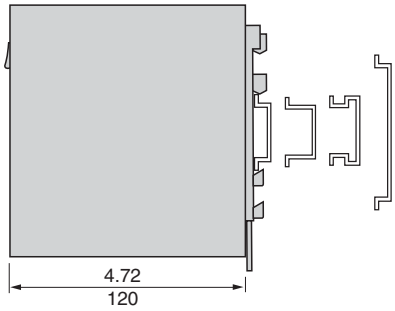

ASIABLB3002
ASIABLD3002

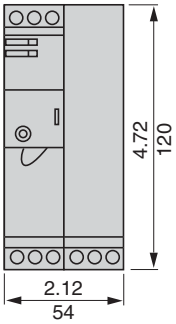

ASIABLM3024
ASIABL●3004

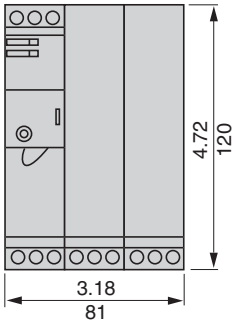

Dual Dimensions = in / mm

Wiring

ASIABLB300●

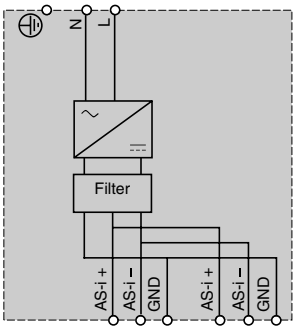

ASIABLD300●

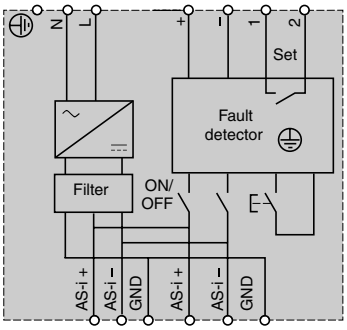

ASIABLM3024

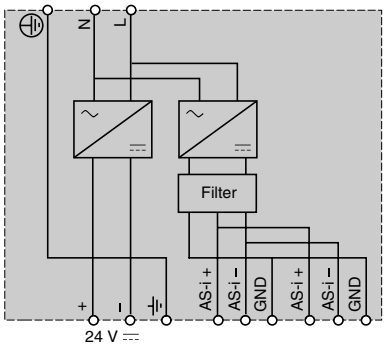

Telemecanique
© 2000-2004 Schneider Electric All Rights Reserved

ABL7RM1202 . . . . . **8**
ABL7RM2401 . . . . . **8**
ABL7CEM24003 . . . . . **8**
ABL7CEM24006 . . . . . **8**
ABL7CEM24012 . . . . . **8**
ABL7RE2402. . . . . **8**
ABL7RE2403. . . . . **8**
ABL7RE2405. . . . . **8**
ABL7RE2410. . . . . **8**
ABL7RP1205. . . . . **8**
ABL7RP2403. . . . . **8**
ABL7RP2405. . . . . **8**
ABL7RP2410. . . . . **8**
ABL7RP4803. . . . . **8**
ABL7UES24050 . . . . . **8**
ABL7UPS24100 . . . . . **8**
ABL7UPS24200 . . . . . **8**
ABL7UPS24400 . . . . . **8**
ASIABLB3002. . . . . **20**
ASIABLB3004. . . . . **20**
ASIABLD3002. . . . . **20**
ASIABLD3004. . . . . **20**
ASIABLM3024. . . . . **20**

NOTE: Protective devices are listed on pages 15 and 21.

© 2000-2004 Schneider Electric All Rights Reserved

Schneider Electric
8001 Highway 64 East
Knightdale, NC 27545
1-888-SquareD
(1-888-778-2733)
www.us.SquareD.com

Schneider Electric Canada
19 Waterman Avenue,
M4B 1 Y2
Toronto, Ontario
1-800-565-6699
www.schneider-electric.ca

Catalog No. 8440CT0001R4/04 May 2004 © 2000–2004 Schneider Electric All Rights Reserved
Replaces 8440CT0001R2/03 dated 02/04

Installation Instructions
Series 9251
Intrinsic Safety Switching Repeater

General Description

The Series 9251 Intrinsic Safety Switching Repeaters are devices which allow the intrinsically safe connection of various dry contact field switches, including NAMUR type proximity sensors, and provide binary signal transmission via a SPDT or DPDT relay. By programming a series of selector switches on the front panel (behind the I.D. Tag Holder) various signal input/ output configurations along with field open and short circuit monitoring may be selected. LEDs on the front panel indicate circuit status. The units may be located in either a nonhazardous or Division 2 hazardous location provided a suitable enclosure is used. For further information as well as agency approval data reference the RST 49 General Catalog (Isolator section 3).

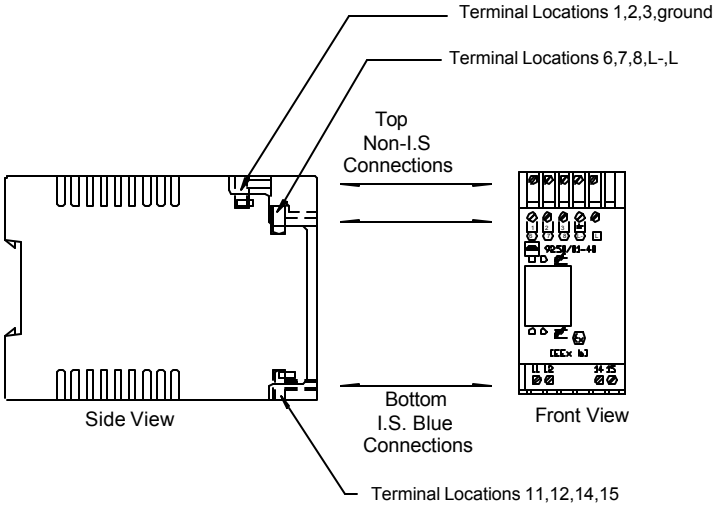

Terminal orientation diagram

Mounting

NS35/15-RA DIN Rail Assembly
This type of mounting platform contains a specified length of NS35/15 DIN Rail, insulator standoffs (SSO-002), and two ground terminals (821470). The 9251 will mount directly onto the rail.

Panel Mount

The 9251 Switching Repeater may also be mounted directly on an enclosure or panel backplate by using the snap-out screw tabs located on the bottom of the unit. 3/16 mounting screws are required.

Enclosures

To prevent the build-up of conductive matter surrounding the 9251 it is recommended that they be housed in an enclosure suitable for the environment. Within these enclosures the Switching Repeaters should be mounted vertically for better heat dissipation with the wire connections accessible from the front. A variety of preassembled NEMA 4, 4 , 7, and 9 enclosures are available from stock. Please consult R. Stahl for a complete listing.

Wiring Instructions

The nonintrinsically safe dc or ac voltage powers the Series 9251 Intrinsic Safety Switching Repeater at terminals L and N for ac connections or L and L- for dc connections. The intrinsically safe dc excitation voltage for the field circuit connects at terminals 11( ) 12(-) and 14( )15(-). The output load connections are selectable through switch settings on the front panel behind the I.D. plate. See the reverse side of this sheet for permissible settings.

Reference the ANSI/ISA RP 12.6 and NEC Article 504 for further information on the wiring of intrinsically safe circuits.

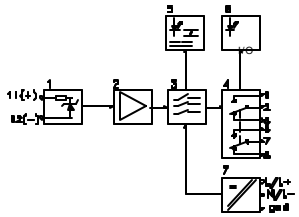

Series 9251/01 single channel basic circuit schematic

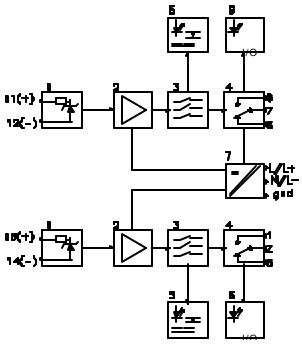

Series 9251/02 dual channel basic circuit schematic

Legend for 9251 Circuit Schematic

1. Intrinsically Safe field connection circuitry
2. signal processing
3. selector switches for unit programming
4. signal relay outputs(s)
5. LED Fault indication
6. LED switch status indication
7. Power supply

Installation Instructions
Series 9251
Intrinsic Safety Switching Repeater

Selector Switch Positions for 9251/01 Single Channel Switching Repeater				9251/01 with DPDT Contact Relay Output Contact Configurations — Note: green LED indicates energized relay coil, red LED indicates fault alarm status			
S1	S2	S3		Field Contact Position	Relay Contact Position	Field Contact Position	Relay Contact Position
0	0	1		Control Current 1.2mA (contact open)	3 1 8 6 2 7	Control Current 2.1mA (contact closed)	3 1 8 6 2 7
0	1	0		Control Current 2.1mA (contact closed)	3 1 8 6 2 7	Control Current 1.2mA (contact open)	3 1 8 6 2 7
1	1	0		Control Current .1mA (contact open) Wire break indictation 33k ohms	3 1 8 6 2 7		
				Control Current 0.15mA to 1.2mA (contact closed) 33k ohms	3 1 8 6 2 7	Control Current 2.1mA (contact open) 33k ohms	3 1 8 6 2 7
1	0	1		Control Current 7.5mA (contact closed) shorted wire indictation 560 ohms	3 1 8 6 2 7		
				Control Current 2.1mA to 6mA (contact closed) 560 ohms	3 1 8 6 2 7	Control Current 1.2mA (contact open) 560 ohms	3 1 8 6 2 7

Selector Switch Positions for 9251/02 Single Channel Switching Repeater						9251/02 with SPDT Contacts per channel Relay Contact Configurations — Note: green LED indicates energized relay coil, red LED indicates fault alarm status			
S1	S2	S3	S4	S5	S6	Field Contact Position	Relay Contact Position	Field Contact Position	Relay Contact Position
0	0	1	0	0	1	Control Current 1.2mA (contact open)	3 (8) 1 (6) 2 (7)	Control Current 2.1mA (contact closed)	3 (8) 1 (6) 2 (7)
0	1	0	0	1	0	Control Current 2.1mA (contact closed)	3 (8) 1 (6) 2 (7)	Control Current 1.2mA (contact open)	3 (8) 1 (6) 2 (7)
1	1	0	1	1	0	Control Current .1mA (contact open) Wire break indictation 33k ohms	3 (8) 1 (6) 2 (7)		
						Control Current 0.15mA to 1.2mA (contact closed) 33k ohms	3 (8) 1 (6) 2 (7)	Control Current 2.1mA (contact open) 33k ohms	3 (8) 1 (6) 2 (7)
1	0	1	1	0	1	Control Current 7.5mA (contact closed) shorted wire indictation 560 ohms	3 (8) 1 (6) 2 (7)		3 (8) 1 (6) 2 (7)
						Control Current 2.1mA to 6mA (contact closed) 560 ohms	3 (8) 1 (6) 2 (7)	Control Current 1.2mA (contact open) 560 ohms	3 (8) 1 (6) 2 (7)

R. Stahl, Inc.
45 Northwestern Drive
Salem, NH 03079
Tel. 800-782-4357 Fax 603-870-9290 E-mail: sales rstahl.com
Website: www.rstahl.com

Where's your nearest branch?
See pages A3–A8 for branch listings.

Telemecanique

E48539

LR43364

No. 3DY19
Non-Reversing

No. 3DY59
Reversing

TESYS IEC Motor Starters

Rugged design ensures a long mechanical and electrical life. For industrial motor control applications, combine a contactor with an overload relay.

REVERSING CONTACTORS

Wire guides are inclined for easy wiring and captive screws are in the ready-to-wire position. Contactors feature a built-in capability for mounting on 35mm DIN rail and keyhole slots for convenient panel mounting. Removable terminal cover provides IP 20 degree of protection. Mechanical life of 30 million operations. Snap-on accessories available on page 379.

- 50/60 Hz Coil

Overload Relay Code	Amp Rating Inductive	Auxiliary Contact	HP 1-Phase 115V	HP 1-Phase 230V	HP 3-Phase 208V	HP 3-Phase 230V	HP 3-Phase 460V	Telemecanique Model	24VAC (B7) Stock No.		24VAC (B7) Each	120VAC (G7) Stock No.		120VAC (G7) Each	208VAC (L6) Stock No.		208VAC (L6) Each	240VAC (U7) Stock No.		240VAC (U7) Each	Shpg. Wt.
3-POLE CONTACTORS																					
A	9	1NO/1NC	0.5	1	2	2	5	LC1D09	3DY19	✓	$88.45	3DY20	✓	$88.45	3DY21	✓	$88.45	3DY22	✓	$88.45	0.8
B	12	1NO/1NC	1	2	3	3	7.5	LC1D12	3DY27	✓	111.80	3DY28	✓	111.80	3DY29	✓	111.80	3DY30	✓	111.80	0.8
C	18	1NO/1NC	1	3	5	5	10	LC1D18	3DY35	✓	127.35	3DY36	✓	127.35	3DY37	✓	127.35	3DY38	✓	127.35	0.8
D	25	1NO/1NC	2	3	7.5	7.5	15	LC1D25	3DY43	✓	141.90	3DY44	✓	141.90	3DY45	✓	141.90	3DY46	✓	141.90	1.0
E	32	1NO/1NC	2	5	10	10	20	LC1D32	3DY51	✓	162.00	3DY52	✓	162.00	3DY53	✓	162.00	3DY54	✓	162.00	0.9
F	40	1NO/1NC	3	5	10	10	30	LC1D40	3DA89	✓	205.50	3DA90	✓	205.50	3DA91	✓	205.50	3DA92	✓	205.50	3.1
G	50	1NO/1NC	3	7.5	15	15	40	LC1D50	3DA97	✓	220.00	3DA98	✓	220.00	3DA99	✓	220.00	3DB10	✓	220.00	3.1
H	65	1NO/1NC	5	10	20	20	50	LC1D65	3DB16	✓	302.50	3DB17	✓	302.50	3DB18	✓	302.50	3DB19	✓	302.50	3.1
J	80	1NO/1NC	7.5	15	30	30	60	LC1D80	3DB24	✓	341.75	3DB25	✓	341.75	3DB26	✓	341.75	3DB27	✓	341.75	3.4
3-POLE REVERSING CONTACTORS MECHANICALLY INTERLOCKED																					
A	9	1NO/1NC	0.5	1	2	2	5	LC2D09	3DY59	✓	225.50	3DY60	✓	225.50	3DY61	✓	225.50	3DY62	✓	225.50	1.9
B	12	1NO/1NC	1	2	3	3	7.5	LC2D12	3DY67	✓	301.50	3DY68	✓	301.50	—		—	3DY70	✓	301.50	1.9
C	18	1NO/1NC	1	3	5	5	10	LC2D18	3DY75	✓	326.75	3DY76	✓	326.75	3DY77	✓	326.75	3DY78	✓	326.75	1.8
D	25	1NO/1NC	2	3	7.5	7.5	15	LC2D25	3DY83	✓	354.25	3DY84	✓	354.25	3DY85	✓	354.25	3DY86	✓	354.25	2.1

Telemecanique

No. 3EA37

No. 3DE26

TESYS IEC Overload Relays

Bimetallic, ambient-compensated relays are for open style IEC motor starters.Relays have adjustable current range and mount directly to underside of contactor.

- Lockable and sealable manual/automatic reset
- For 3-phase applications
- Class 10 with single phase sensitivity

Contactor Code	Adjustable Range in Full-Load Amps	Dimensions (In.) H	W	D	Telemecanique Model	Stock No.		Each	Shpg. Wt.	Contactor Code	Adjustable Range in Full-Load Amps	Dimensions (In.) H	W	D	Telemecanique Model	Stock No.		Each	Shpg. Wt.
A-E	0.10-0.16	3.62	1.77	1.85	LRD01	3EA37	✓	$66.90	0.3	B-E	9.0-13.0	3.62	1.77	1.85	LRD16	3EA10	✓	$69.20	0.3
A-E	0.16-0.25	3.62	1.77	1.85	LRD02	3EA38	✓	66.90	0.4	C-E	12.0-18.0	3.62	1.77	1.85	LRD21	3EA11	✓	69.20	0.3
A-E	0.25-0.40	3.62	1.77	1.85	LRD03	3EA39	✓	66.90	0.3	D,E	16.0-24.0	3.62	1.77	1.85	LRD22	3EA12	✓	69.20	0.3
A-E	0.40-0.63	3.62	1.77	1.85	LRD04	3EA40	✓	66.90	0.3	D,E	23.0-32.0	3.62	2.17	2.32	LRD32	3EA13	✓	81.85	0.3
A-E	0.63-1.0	3.62	1.77	1.85	LRD05	3EA41	✓	66.90	0.4	E	30.0-38.0	3.62	2.17	2.32	LRD35	3EA14	✓	81.85	0.3
A-E	1.0-1.7	3.62	1.77	1.85	LRD06	3EA42	✓	66.90	0.3	F-J	23.0-32.0	4.29	2.92	2.12	LRD3353	3DE26	✓	103.50	1.1
A-E	1.6-2.5	3.62	1.77	1.85	LRD07	3EA43	✓	66.90	0.3	F-J	30.0-40.0	4.29	2.92	2.12	LRD3355	3DE27	✓	103.50	1.1
A-E	2.5-4.0	3.62	1.77	1.85	LRD08	3EA44	✓	66.90	0.3	G-J	37.0-50.0	4.29	2.92	2.12	LRD3357	3DE28	✓	103.50	1.1
A-E	4.0-6.0	3.62	1.77	1.85	LRD10	3EA45	✓	66.90	0.3	H-J	48.0-65.0	4.29	2.92	2.12	LRD3359	3DE29	✓	103.50	1.1
A-E	5.5-8.0	3.62	1.77	1.85	LRD12	3EA46	✓	69.20	0.2	H-J	55.0-70.0	4.29	2.92	2.12	LRD3361	3DE30	✓	123.60	1.1
A-E	7.0-10.0	3.62	1.77	1.85	LRD14	3DY99	✓	69.20	0.3	J	63.0-80.0	4.29	2.92	2.12	LRD3363	3DE31	✓	123.60	1.1

Where's your nearest branch?
See pages A3–A8 for branch listings.

REDINGTON
Counters, Hour Meters, Controllers, Indicators.

Made In U.S.A.

No. 3AB99

No. 3AE10

No. 3AE11

No. 3AE15

AC and DC Voltage Quartz Hour Meters

All meters feature a totally sealed, black polymer case to protect against the environment, and reliable quartz accuracy for precise timekeeping and long service life. 6-digit display with 0.125" numbers. Hours appear white on black; tenths appear red on white. 1/4" (6.3mm) spade terminals. Accuracy: ±0.02 over entire range. Temperature range from -40° to 185°F. Mounts easily with clip or mounting holes. The flush rectangular and 2-hole meters fit a panel opening of 1.45 x 0.95" (36.8mm x 24.1mm); the flush round and 3-hole meters have a panel opening of 2.0" (50.6mm). UL recognized, CSA Certified, and CE Compliant.

AC METERS

Meters feature a wide operating range of 90-240VAC, 50/60 Hz, eliminating the need for two separate meters—one for 115VAC and one for 230VAC. Standard industry housings.

DC METERS

Meters have an operating range of 10-80VDC with ±0.02% accuracy over entire range.

Display Units	Registers Elapsed Time Up To (Hrs.):	Bezel Face Type	Bezel (In.) (Face)	Length (In.) from Back of Bezel	Redington Model	Stock No.	Each	Shpg. Wt.
AC HOUR METERS, 90-240VAC								
Hours and Tenths	99999.9	2-Hole Rectangular	2.12 x 1.25	2.15	722-0001	3AB98	$28.90	0.4
Hours and Tenths	99999.9	Flush Rectangular	1.77 x 1.25	2.15	722-0002	3AB99	28.90	0.3
Hours and Tenths	99999.9	Flush Round	1.99	1.5	722-0003	3AE10	28.90	0.3
Hours and Tenths	99999.9	3-Hole Round	2.8	1.5	722-0004	3AE11	28.90	0.3
DC HOUR METERS, 10-80VDC								
Hours and Tenths	99999.9	3-Hole Round	2.8	1.5	732-0001	3AE12	28.90	0.3
Hours and Tenths	99999.9	Flush Rectangular	1.77 x 1.25	2.15	732-0002	3AE13	28.90	0.3
Hours and Tenths	99999.9	Flush Round	2.33	1.5	732-0003	3AE14	28.90	0.3
Hours and Tenths	99999.9	2-Hole Rectangular	2.12 x 1.25	2.15	732-0004	3AE15	28.90	0.3

REDINGTON
Counters, Hour Meters, Controllers, Indicators.

No. 3AE20

No. 3AE21

No. 3AE22

No. 3AE23

Electronic LCD Hour Meters

All models have a large 6-digit 7mm display, and are totally sealed from moisture and dirt to assure top performance. Their rugged construction and industry standard housings make them ideal replacements for current hour meters. Voltage operating range is 10-277VDC and 20-277VAC, 50/60 Hz. Black polymer case. 1/4" (6.3mm) spade terminals. Meters include clip retainer and screws for mounting. UL/C-UL Recognized and CE Compliant.

- Fit into existing panel cutouts (0.95 x 1.45")
- LCD is polarized for high visibility in sunlight
- Meters conform to NEMA 4 and 4X specifications

Display Units	Registers Elapsed Time Up To (Hrs.):	Bezel Face Type	Bezel (In.) (Face)	Length (In.) from Back of Bezel	Redington Model	Stock No.	Each	Shpg. Wt.
Hours and Tenths	99999.9	2-Hole Rectangular	2.04 x 1.10	0.44	3311-0000	3AE20	$30.00	0.3
Hours and Tenths	99999.9	3-Hole Round	2.86	0.44	3311-1000	3AE21	30.00	0.3
Hours and Tenths	99999.9	Flush Rectangular	1.60 x 1.10	0.44	3311-2000	3AE22	30.00	0.3
Hours and Tenths	99999.9	Flush Round	2.27	0.44	3311-3000	3AE23	30.00	0.3

Series CT40/50

Current Transformer

4-20 mA or 0-5 VDC Output, Split Core Case

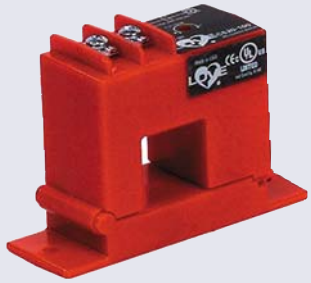

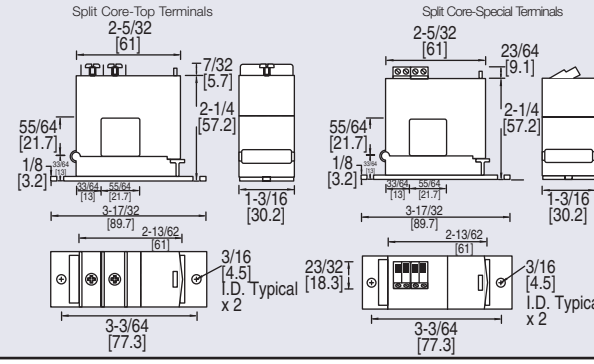

Series CT40/50 combine current transformer and signal conditioner into a single package. Transformers feature jumper selectable ranges and split core case. Units are designed for applications on linear or sinusoidal AC loads.

MODELS

Model Number	Range	Output	Power Requirements
CT40-100	10/20/50 A	4-20 mA	12-40 VDC, Loop Powered
CT40-102	10/20/50 A	0-5 VDC	Self Powered
CT50-100	100/150/200 A	4-20 mA	12-40 VDC, Loop Powered
CT50-102	100/150/200 A	0-5 VDC	Self Powered

SPECIFICATIONS

Output Signal: 0-5 VDC or 4-20 mA, depending on model.

Power Requirements: See Table.

Accuracy: CT40/50-102: 1.0% FS; CT40/50-100: 0.5% FS.

Temperature Limits: -4 to 122°F (-20 to 50°C).

Response Time: CT40/50-102: 100 ms; CT40/50-100: 300 ms.

Isolation Voltage: 1270 VAC.

Frequency: CT40/50-102: 50-60 Hz; CT40/50-100: 20-100 Hz (Sinusoidal waveforms only).

Enclosure Rating: UL 94V-0 flammability rated.

Agency Approval: CE.

Series CT60/70

True RMS Current Transformer

Field Selectable Range, Split Core Case

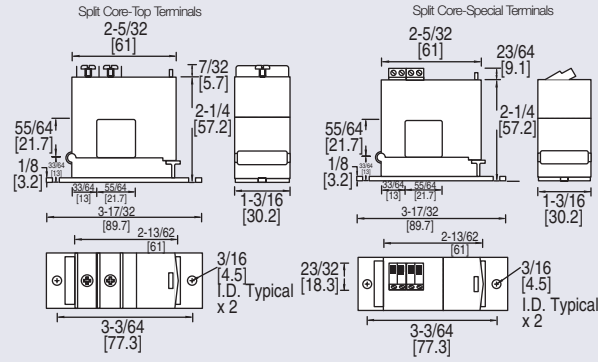

Series CT60/70 Current Transformers provide true RMS output on distorted AC waveforms – ideal for nonlinear loads or noisy environments. Each model offers three jumper selectable ranges and 1270 VAC isolation. Split core case allows easy installation.

MODELS

Model Number	Range
CT60-100	10/20/50 A
CT70-100	100/150/200 A

SPECIFICATIONS

Output Signal: 4-20 mA, loop powered, true RMS.

Power Requirements: 24 VDC nominal.

Accuracy: 0.8% FS.

Temperature Limits: -4 to 122°F (-20 to 50°C).

Response Time: 600 ms to 90%.

Isolation Voltage: 1270 VAC.

Frequency: 10-400 Hz.

Enclosure Rating: UL 94V-0 flammability rated.

Agency Approval: CE.

EXHIBIT 1

SITE SPECIFIC INFORMATION

EXHIBIT 2

PROJECT BID PROPOSAL SHEETS