C2 087 00431-8.1

RECEIVED
MAR 14 2002
BUREAU OF
ENVIRONMENTAL REMEDIATION

FINAL

SOURCE AREA SOIL REMOVAL CLOSURE REPORT

FORMER UNOCAL CHEMICAL DISTRIBUTION FACILITY
2100 EAST 37TH STREET NORTH
WICHITA, KANSAS

Terracon Project No. 01017118

March 13, 2002

Terracon

FINAL

RECEIVED
MAR 14 2002
BUREAU OF
ENVIRONMENTAL REMEDIATION

SOURCE AREA SOIL REMOVAL CLOSURE REPORT

FORMER UNOCAL CHEMICAL DISTRIBUTION FACILITY
2100 EAST 37TH STREET NORTH
WICHITA, KANSAS

Terracon Project No. 01017118
March 13, 2002

Prepared for:

UNOCAL CORPORATION
HOFFMAN ESTATES, ILLINOIS

Prepared by:

Terracon
Wichita, Kansas

Terracon

TABLE OF CONTENTS

1.0 INTRODUCTION 1

2.0 SOURCE AREA SOIL REMOVAL ACTIVITES 1

2.1 General Information 1
2.2 Excavation Activities 2
2.3 Confirmation Soil Sampling and Testing 2
2.4 Disposal 3
2.5 Backfilling/Compaction 3

3.0 SUMMARY/CONCLUSIONS 4

TABLES

Table 1: Excavation 1 Verification Soil Sample Laboratory Analytical Results
Table 2: Gate Excavation Verification Soil Sample Laboratory Analytical Results
Table 3: Pit 3 Excavation Verification Soil Sample Laboratory Analytical Results

APPENDICES

Appendix A
Figure 1: Source Area Soil Removal Excavations
Figure 2: Excavation 1 – Sample Location Diagram
Figure 3: Gate Excavation – Sample Location Diagram
Figure 4: Pit 3 Excavation – Sample Location Diagram

Appendix B
Photo Documentation

Appendix C
Laboratory Analytical Results

Appendix D
Safety-Kleen® Material Profile
Oklahoma Department of Environmental Quality Disposal Plan Application
Safety-Kleen® LDR Notification Form
Safety-Kleen® Generator's Analytical Report

Appendix E
Laboratory Analytical Report – Borrow Pits

SOURCE AREA SOIL REMOVAL CLOSURE REPORT

FORMER UNOCAL CHEMICAL DISTRIBUTION FACILITY
2100 EAST 37TH STREET NORTH
WICHITA, KANSAS

Terracon Project No. 01017118
March 13, 2002

1.0 INTRODUCTION

Terracon, on behalf of Union Oil Company of California (d.b.a. Unocal) has completed source soil removal at the former Unocal Chemical Distribution Facility located at 2100 East 37th Street North in Wichita, Kansas. The source remediation work was conducted in general accordance with the Source Area Soil Removal Work Plan dated October 18, 2001, which was approved by the Kansas Department of Health and Environment (KDHE) by letter dated October 23, 2001. This report summarizes the work performed and results obtained from the source area soil removal activities conducted at the site.

2.0 SOURCE AREA SOIL REMOVAL ACTIVITES

2.1 General Information

Source area soil removal activities included excavation, removal and disposal of soils impacted by volatile organic compounds (VOCs). Source excavation activities were conducted in 4 areas identified in the Harding ESE source delineation report (Direct-push Sampling Results for Further Source Delineation, dated September 24, 2001), where VOC concentrations detected in the unsaturated zone exceeded Tier 2, Risk-Based Standards for Kansas (RSK) criteria (probes DP-103, DP-121, DP-144/145 and DP-147) (see Figure 1 Appendix A). In addition, at the suggestion of KDHE (KDHE letter dated October 23, 2001), source excavation was also conducted near the former "enhanced bioremediation pilot test area."

Fieldwork was initiated on October 30, 2001 and completed on December 21, 2001. A Terracon environmental professional was on-site to supervise and direct field activities, collect soil samples from each excavation, conduct field headpsace analysis of soil samples, collect soil samples for confirmation laboratory testing, and monitor the work area of health and safety purposes. A photo log of source area soil removal activities is included in Appendix B. Prior to initiating fieldwork, a Health and Safety Plan (HSP) was prepared

for the project and the HSP implemented in the field by the Terracon environmental professional.

2.2 Excavation Activities

Source excavation was conducted using a backhoe and trackhoe. Fields and Sons, Inc., provided excavation equipment and personnel to conduct the excavation and backfilling activities under the supervision of Terracon personnel. Excavated soils were loaded into end-dump trucks provided by Safety-Kleen® Inc. (S-K). In addition, some excavated soils were stockpiled on plastic sheeting on concrete pavement on-site and a berm placed around the stockpile. Upon arrival of trucks the stockpile soils were loaded into the trucks, using a front-end loader. The excavated soils and concrete rubble were transported to the S-K Lone Mountain Landfill in Waynoka, Oklahoma and disposed as a hazardous waste (see Section 2.4).

Excavation was initiated in the approximate center of each of the 4 areas identified in the Harding ESE report (DP-103, DP-121, DP-144/145 and DP-147) and near the former enhanced bioremediation pilot test area (see Figure 1). During excavation activities, a Terracon professional observed the excavated soils for visible contamination and conducted field headspace analysis on soil samples obtained from the sidewalls and bottom of the excavations as outlined in the Work Plan. Field headspace analysis results were used to direct excavation activities. Figure 1 in Appendix A shows the final plan dimensions and locations of the source excavations performed at the site. Excavation 1 addressed impacted soils at and surrounding probes DP-144/145 and DP-147, and the Gate excavation addressed impacted soils at and surrounding probes DP-103 and DP-121. In addition, 4 test pits were performed north of the enhanced bioremediation pilot test area (Pit 1, Pit 2, Pit 3 and Pit 4). At each excavation, exclusive of Pits 2 and 4, impacted soils extended to groundwater observed in the field and the excavations terminated within the saturated zone. Impacted soil did not extend to groundwater in Pits 2 and 4. During excavation activities the groundwater recovery/remediation system was turned off (daytime) and turned back on after working hours (night time).

2.3 Confirmation Soil Sampling and Testing

Once sidewall soil sample field headspace VOC concentrations were below about 50 to 90 ppm, excavation activities were terminated and confirmation soil samples were collected from the excavations. Figures 2, 3, and 4 in Appendix A show the approximate locations of confirmation soil samples collected from each excavation.

Each confirmation soil sample was placed in laboratory provided 4-ounce glass jars with Teflon lined lids. The sample jars were labeled and placed on ice in a sample cooler, then

shipped following chain-of-custody procedures, to SPL Laboratories, Houston, Texas and/or TestAmerica, Nashville, Tennessee for laboratory analysis of VOCs per EPA Method 8260. Laboratory reports for the samples analyzed are included in Appendix C. Tables 1, 2 and 3 summarize the laboratory analytical data for the confirmation soil samples.

Upon receipt of confirmation laboratory analytical results, the results were reviewed to determine if detected VOC concentrations were below established RSK (Soil to Groundwater Pathway). With KDHE approval, once soil confirmation laboratory results were below RSK, excavation activities were terminated and the excavations backfilled with imported fill.

2.4 Disposal

Excavated impacted soil and concrete rubble were transported and disposed as a hazardous waste into the S-K Lone Mountain Landfill in Waynoka, Oklahoma. A copy of the Material Profile, approved Oklahoma Department of Environmental Quality Disposal Plan Application and LDR Notification Form are included in Appendix D. A Waste Manifest was prepared and executed for each load of soil/concrete rubble transported to the landfill. Copies of the Waste Manifests are retained in the project file at Terracon's Wichita office. Included in Appendix D is a Generator's Analytical Report provided by S-K that summarizes the number of loads disposed into the Lone Mountain Landfill, the tonnage, arrival date at the landfill, and load Waste Manifest numbers.

As indicated in the Generator's Analytical Report, 230 loads or 5,308.98 tons were disposed in the landfill.

2.5 Backfilling/Compaction

After confirmation sampling indicated VOC concentrations were below RSK, the excavations were backfilled with imported fill. Two borrow pits (fat clay and fine to medium sand) were used to supply fill material for the excavations. Prior to using material from each borrow pit, a representative soil sample was collected from each borrow pit and the samples analyzed for VOCs per EPA Method 8260. VOCs were not detected above laboratory detection limits in the borrow pit soil samples (see Appendix E).

In general, fat clay backfill material was placed in the bottom of each excavation to about 5 to 6 feet above bottom and the remainder of the excavations backfilled with sand. The backfill material was placed in lifts not exceeding about 9-inches thick, from excavation total depth to about 8 to 10 feet below ground surface, using the track hoe. The track hoe bucket and a remote controlled sheeps foot were used to compact each lift. After backfilling to about 8 to 10 feet below ground surface, the remainder of the excavation was backfilled

and compacted with the front-end loader and sheeps foot. The backfill material above about 8 to 10 feet below ground surface was placed in lifts not exceeding about 9-inches in loose thickness and compacted to at least 95% of maximum dry density.

3.0 SUMMARY/CONCLUSIONS

Terracon, on behalf of Unocal, performed source area soil removal activities at the former Unocal Chemical Distribution Facility located at 2100 East 37th Street South, Wichita, Kansas. Using a backhoe and trackhoe, 5,308.98 tons of contaminated soil were excavated from the Unocal site and the impacted soil disposed into the S-K, Lone Mountain Landfill in Waynoka, Oklahoma. Impacted soils extended to top of groundwater at each excavation (except Pits 2 and 4) and the excavations were terminated at top of groundwater observed in the field. Impacted soil did not extend to groundwater in Pits 2 and 4. After confirmation soil sample analytical results indicated VOCs were not detected above RSK (where established), the source excavations were backfilled with imported soil with the approval of KDHE.

n:\env\projects\2001\01017118\report\sourceclosure.rpt.doc

TABLES

Table 1: Excavation 1 Verification Soil Sample Laboratory Analytical Results
Former Unocal Chemical Distribution Facility
Wichita, Kansas

Sample ID	Date Sampled	Depth (feet)	PID Reading (PPM)	RSK	Detected VOCs (mg/kg)																			
					PCE	1,1,1-TCA	1,1-DCA	1,1-DCE	TCE	cis 1,2-DCE	N	E	X	1,2,4-TMB	1,3,5-TMB	n-butylB	n-proplB	T	2-butanone	Acetone	Methylene Chloride	Vinyl acetate	Vinyl chloride	4-Methyl-2-P
					0.18	5.5	13	0.12	0.20	0.80	140	55	700	27	7.8	12	44	40	NE	3.8	0.03	NE	0.02	NE
EX-1	11/1/01	2	8.5		NT	NT	NT	NT	NT	NT	NT	NT	NT	NT	NT	NT	NT	NT	NT	NT	NT	NT	NT	NT
		3.5	4.8		0.009	ND (0.005)	ND (0.005)	ND (0.005)	ND (0.005)	ND (0.005)	ND (0.005)	ND (0.005)	ND (0.005)	ND (0.005)	ND (0.005)	ND (0.005)	ND (0.005)	ND (0.005)	ND(0.02)	ND(0.1)	ND(0.005)	ND(0.01)	ND(0.01)	ND(0.01)
		8	4.0		NT	NT	NT	NT	NT	NT	NT	NT	NT	NT	NT	NT	NT	NT	NT	NT	NT	NT	NT	NT
EX-2	11/1/01	2	2.7		NT	NT	NT	NT	NT	NT	NT	NT	NT	NT	NT	NT	NT	NT	NT	NT	NT	NT	NT	NT
		3.5	4.0		ND (0.005)	ND (0.005)	ND (0.005)	ND (0.005)	ND (0.005)	ND (0.005)	ND (0.005)	ND (0.005)	ND (0.005)	ND (0.005)	ND (0.005)	ND (0.005)	ND (0.005)	ND (0.005)	ND(0.02)	ND(0.1)	ND(0.005)	ND(0.01)	ND(0.01)	ND(0.01)
		8	0.0		NT	NT	NT	NT	NT	NT	NT	NT	NT	NT	NT	NT	NT	NT	NT	NT	NT	NT	NT	NT
EX-3	11/1/01	2	NS		NT	NT	NT	NT	NT	NT	NT	NT	NT	NT	NT	NT	NT	NT	NT	NT	NT	NT	NT	NT
		3.5	0.0		ND (0.005)	ND (0.005)	ND (0.005)	ND (0.005)	ND (0.005)	ND (0.005)	ND (0.005)	ND (0.005)	ND (0.005)	ND (0.005)	ND (0.005)	ND (0.005)	ND (0.005)	ND (0.005)	ND(0.02)	ND(0.1)	ND(0.005)	ND(0.01)	ND(0.01)	ND(0.01)
		8	1.5		NT	NT	NT	NT	NT	NT	NT	NT	NT	NT	NT	NT	NT	NT	NT	NT	NT	NT	NT	NT
EX-4	11/1/01	2	7.8		NT	NT	NT	NT	NT	NT	NT	NT	NT	NT	NT	NT	NT	NT	NT	NT	NT	NT	NT	NT
		3.5	51.2		ND (0.005)	ND (0.005)	ND (0.005)	ND (0.005)	ND (0.005)	0.006	0.009	0.013	0.048	0.03	0.009	ND (0.005)	0.005	ND (0.005)	ND(0.02)	ND(0.1)	ND(0.005)	ND(0.01)	ND(0.01)	ND(0.01)
		8	8.8		NT	NT	NT	NT	NT	NT	NT	NT	NT	NT	NT	NT	NT	NT	NT	NT	NT	NT	NT	NT
EX-5	11/1/01	2	NS		NT	NT	NT	NT	NT	NT	NT	NT	NT	NT	NT	NT	NT	NT	NT	NT	NT	NT	NT	NT
		3.5	1.2		ND (0.005)	ND (0.005)	ND (0.005)	ND (0.005)	ND (0.005)	ND (0.005)	ND (0.005)	ND (0.005)	ND (0.005)	ND (0.005)	ND (0.005)	ND (0.005)	ND (0.005)	ND (0.005)	ND(0.02)	ND(0.1)	ND(0.005)	ND(0.01)	ND(0.01)	ND(0.01)
		8	5.8		NT	NT	NT	NT	NT	NT	NT	NT	NT	NT	NT	NT	NT	NT	NT	NT	NT	NT	NT	NT
EX-6	11/1/01	2	NS		NT	NT	NT	NT	NT	NT	NT	NT	NT	NT	NT	NT	NT	NT	NT	NT	NT	NT	NT	NT
		4	7.0		0.005	ND (0.005)	ND (0.005)	ND (0.005)	ND (0.005)	ND (0.005)	ND (0.005)	ND (0.005)	ND (0.005)	ND (0.005)	ND (0.005)	ND (0.005)	ND (0.005)	ND (0.005)	ND(0.02)	ND(0.1)	ND(0.005)	ND(0.01)	ND(0.01)	ND(0.01)
		8	4.2		NT	NT	NT	NT	NT	NT	NT	NT	NT	NT	NT	NT	NT	NT	NT	NT	NT	NT	NT	NT
EX-7	11/1/01	2	NS		NT	NT	NT	NT	NT	NT	NT	NT	NT	NT	NT	NT	NT	NT	NT	NT	NT	NT	NT	NT
		3.5	9.8		0.18	0.190	0.02	0.015	0.087	0.13	ND (0.005)	ND (0.005)	0.011	ND (0.005)	ND (0.005)	ND (0.005)	ND (0.005)	0.007	ND(0.02)	ND(0.1)	ND(0.005)	ND(0.01)	ND(0.01)	ND(0.01)
		8	2.5		NT	NT	NT	NT	NT	NT	NT	NT	NT	NT	NT	NT	NT	NT	NT	NT	NT	NT	NT	NT
EX-8	11/1/01	2	0.0		NT	NT	NT	NT	NT	NT	NT	NT	NT	NT	NT	NT	NT	NT	NT	NT	NT	NT	NT	NT
		3.5	2.4		ND (0.005)	ND (0.005)	ND (0.005)	ND (0.005)	ND (0.005)	ND (0.005)	ND (0.005)	ND (0.005)	ND (0.005)	ND (0.005)	ND (0.005)	ND (0.005)	ND (0.005)	ND (0.005)	ND(0.02)	ND(0.1)	ND(0.005)	ND(0.01)	ND(0.01)	ND(0.01)
		8	0.0		NT	NT	NT	NT	NT	NT	NT	NT	NT	NT	NT	NT	NT	NT	NT	NT	NT	NT	NT	NT
EX-9	11/2/01	2	NS		NT	NT	NT	NT	NT	NT	NT	NT	NT	NT	NT	NT	NT	NT	NT	NT	NT	NT	NT	NT
		3.5	3.5		ND (0.005)	ND (0.005)	ND (0.005)	ND (0.005)	ND (0.005)	ND (0.005)	ND (0.005)	ND (0.005)	ND (0.005)	ND (0.005)	ND (0.005)	ND (0.005)	ND (0.005)	ND (0.005)	ND(0.02)	ND(0.1)	ND(0.005)	ND(0.01)	ND(0.01)	ND(0.01)
		8	6.9		NT	NT	NT	NT	NT	NT	NT	NT	NT	NT	NT	NT	NT	NT	NT	NT	NT	NT	NT	NT
EX-10	11/2/01	2	NS		NT	NT	NT	NT	NT	NT	NT	NT	NT	NT	NT	NT	NT	NT	NT	NT	NT	NT	NT	NT
		3.5	2.1		ND (0.005)	ND (0.005)	ND (0.005)	ND (0.005)	ND (0.005)	ND (0.005)	ND (0.005)	ND (0.005)	ND (0.005)	ND (0.005)	ND (0.005)	ND (0.005)	ND (0.005)	ND (0.005)	ND(0.02)	ND(0.1)	ND(0.005)	ND(0.01)	ND(0.01)	ND(0.01)
		8	NS		NT	NT	NT	NT	NT	NT	NT	NT	NT	NT	NT	NT	NT	NT	NT	NT	NT	NT	NT	NT
EX-11	11/2/01	2	NS		NT	NT	NT	NT	NT	NT	NT	NT	NT	NT	NT	NT	NT	NT	NT	NT	NT	NT	NT	NT
		3.5	6.8		ND (0.005)	ND (0.005)	0.005	ND (0.005)	ND (0.005)	0.007	ND (0.005)	ND (0.005)	ND (0.005)	ND (0.005)	ND (0.005)	ND (0.005)	ND (0.005)	ND (0.005)	ND(0.02)	ND(0.1)	ND(0.005)	ND(0.01)	ND(0.01)	ND(0.01)
		8	7.9		NT	NT	NT	NT	NT	NT	NT	NT	NT	NT	NT	NT	NT	NT	NT	NT	NT	NT	NT	NT
EX-12	11/5/01	8	56.7		0.025	ND (0.005)	ND (0.005)	ND (0.005)	ND (0.005)	0.018	ND (0.005)	ND (0.005)	ND (0.005)	ND (0.005)	ND (0.005)	ND (0.005)	ND (0.005)	ND (0.005)	ND(0.02)	ND(0.1)	ND(0.005)	ND(0.01)	ND(0.01)	ND(0.01)
EX-13	11/5/01	8	54.3		ND (0.005)	ND (0.005)	ND (0.005)	ND (0.005)	ND (0.005)	ND (0.005)	ND (0.005)	ND (0.005)	ND (0.005)	ND (0.005)	ND (0.005)	ND (0.005)	ND (0.005)	ND (0.005)	ND(0.02)	ND(0.1)	ND(0.005)	ND(0.01)	ND(0.01)	ND(0.01)
EX-14	11/5/01	8	137.0		0.005	ND (0.005)	0.014	ND (0.005)	ND (0.005)	0.074	ND (0.005)	ND (0.005)	ND (0.005)	ND (0.005)	ND (0.005)	ND (0.005)	ND (0.005)	ND (0.005)	ND(0.02)	ND(0.1)	ND(0.005)	ND(0.01)	ND(0.01)	ND(0.01)
Ex-15	11/9/01	16.5	NS		ND (0.005)	ND (0.005)	ND (0.005)	ND (0.005)	ND (0.005)	0.067	ND (0.005)	ND (0.005)	ND (0.005)	ND (0.005)	ND (0.005)	ND (0.005)	ND (0.005)	ND (0.005)	ND(0.02)	ND(0.1)	ND(0.005)	ND(0.01)	ND(0.01)	ND(0.01)
EX-16	11/9/01	16.5	NS		ND (0.005)	ND (0.005)	0.015	ND (0.005)	ND (0.005)	ND (0.005)	ND (0.005)	ND (0.005)	ND (0.005)	ND (0.005)	ND (0.005)	ND (0.005)	ND (0.005)	ND (0.005)	ND(0.02)	ND(0.1)	ND(0.005)	ND(0.01)	ND(0.01)	ND(0.01)
EX-17	11/9/01	16.5	NS		ND (0.005)	ND (0.005)	0.024	ND (0.005)	ND (0.005)	ND (0.005)	ND (0.005)	ND (0.005)	ND (0.005)	ND (0.005)	ND (0.005)	ND (0.005)	ND (0.005)	ND (0.005)	3.9	1.8	ND(0.005)	0.09	ND(0.01)	0.023
EX-18	11/9/01	16.5	NS		ND (0.005)	ND (0.005)	ND (0.005)	ND (0.005)	ND (0.005)	ND (0.005)	0.011	ND (0.005)	ND (0.005)	ND (0.005)	ND (0.005)	ND (0.005)	ND (0.005)	ND (0.005)	10	2.2	0.018	0.046	0.012	0.083
EX-19	11/9/01	16.5	NS		ND (0.005)	ND (0.005)	ND (0.005)	ND (0.005)	ND (0.005)	ND (0.005)	ND (0.005)	ND (0.005)	ND (0.005)	ND (0.005)	ND (0.005)	ND (0.005)	ND (0.005)	ND (0.005)	ND(0.02)	ND(0.1)	ND(0.005)	ND(0.01)	ND(0.01)	ND(0.01)
EX-20A	11/14/01	3.5	0.0		ND (0.0026)	ND (0.0026)	ND (0.0026)	ND (0.0026)	ND (0.0026)	0.0037	ND (0.0065)	ND (0.0026)	ND (0.0026)	ND (0.0026)	ND (0.0026)	ND (0.0026)	ND (0.0026)	ND (0.0026)	ND(0.0645)	ND(0.0645)	ND(0.0065)	NA	ND (0.0026)	ND(0.0129)
EX-21A	11/14/01	2	5.8		NT	NT	NT	NT	NT	NT	NT	NT	NT	NT	NT	NT	NT	NT	NT	NT	NT	NT	NT	NT
		3.5	6.7		ND (0.0024)	ND (0.0024)	ND (0.0024)	ND (0.0024)	ND (0.0024)	ND (0.0024)	ND (0.006)	ND (0.0024)	ND (0.0024)	ND (0.0024)	ND (0.0024)	ND (0.0024)	ND (0.0024)	0.0074	ND(0.0597)	ND(0.0597)	ND(0.006)	NA	ND(0.0024)	ND(0.0119)
EX-22A	11/14/01	2	8.9		NT	NT	NT	NT	NT	NT	NT	NT	NT	NT	NT	NT	NT	NT	NT	NT	NT	NT	NT	NT
		3.5	0.0		ND (0.0024)	ND (0.0024)	ND (0.0024)	ND (0.0024)	ND (0.0024)	ND (0.0024)	ND (0.006)	ND (0.0024)	ND (0.0024)	ND (0.0024)	ND (0.0024)	ND (0.0024)	ND (0.0024)	ND (0.0024)	ND(0.0601)	ND(0.0601)	ND(0.006)	NA	ND(0.0024)	ND(0.012)
EX-23	11/14/01	2	4.1		NT	NT	NT	NT	NT	NT	NT	NT	NT	NT	NT	NT	NT	NT	NT	NT	NT	NT	NT	NT
		3.5	4.5		ND (0.0024)	ND (0.0024)	ND (0.0024)	ND (0.0024)	ND (0.0024)	ND (0.0024)	ND (0.006)	ND (0.0024)	ND (0.0024)	ND (0.0024)	ND (0.0024)	ND (0.0024)	ND (0.0024)	ND (0.0024)	ND(0.0604)	ND(0.0604)	ND(0.006)	NA	ND(0.0024)	ND(0.0121)
		6	4.4		NT	NT	NT	NT	NT	NT	NT	NT	NT	NT	NT	NT	NT	NT	NT	NT	NT	NT	NT	NT
		8	9.8		NT	NT	NT	NT	NT	NT	NT	NT	NT	NT	NT	NT	NT	NT	NT	NT	NT	NT	NT	NT

N:\ENV\PROJECTS\2001\01017118\Report\[Excavation Analysis_PID.xls]Oct-Nov

mg/kg = milligrams per kilogram
PID = Photoionization Detector (MiniRae 2000 with 11.7eV lamp)
RSK = Kansas Risk-Based Standards, Tier 2, Soil to Groundwater, Non-Residential Scenario.
PCE = Tetrachloroethene
1,1,1-TCA = 1,1,1-Trichloroethane
1,1-DCA = 1,1-Dichloroethane
1,1-DCE = 1,1-Dichloroethene

TCE = Trichloroethene
cis-1,2-DCE = cis-1,2-Dichloroethene
N = Naphthalene
E = Ethylbenzene
X = Xylenes (Total)
1,2,4-TMB = 1,2,4-Trimethylbenzene
1,3,5-TMB = 1,3,5-Trimethylbenzene
n-butylB = n-Butylbenzene

n-proplB = n-Propylbenzene
T = Toluene
4-Methyl-2-P = 4-Methyl-2-Pentanone
ND = Not detected, laboratory detection limits in parenthesis.
NT = Not Tested
NE = Not Established
VOCs = Volatile organic compounds per EPA Method 8260

Terracon

Table 2: Gate Excavation Verification Soil Sample Laboratory Analytical Results
Former Unocal Chemical Distribution Facility
Wichita, Kansas

Sample ID	Date Sampled	Depth (feet)	PID Reading (PPM)	RSK	Detected VOCs (mg/kg)													
					Acetone	sec-BB	cis 1-2, DCE	E	IPB	4-IPT	N	n-propIB	Toluene	TCE	1,2,4 TMB	1,3,5, TMB	Xylenes (Total)	PCE
					3.8	9	0.80	55	NE	NE	140	44	40	0.20	27	7.8	700	0.18
G-EX-W	11/15/01	2	54.2		NT	NT	NT	NT	NT	NT	NT	NT	NT	NT	NT	NT	NT	NT
		3	NT		0.0746	ND(0.0026)	ND (0.0026)	ND (0.0026)	ND (0.0026)	ND (0.0026)	ND (0.0064)	ND (0.0026)	ND (0.0026)	ND (0.0026)	ND (0.0026)	ND (0.0026)	ND (0.0026)	ND (0.0026)
		4	9		NT	NT	NT	NT	NT	NT	NT	NT	NT	NT	NT	NT	NT	NT
		6	24.6		NT	NT	NT	NT	NT	NT	NT	NT	NT	NT	NT	NT	NT	NT
		8	16.1		NT	NT	NT	NT	NT	NT	NT	NT	NT	NT	NT	NT	NT	NT
G-EX-SW	11/15/01	3	8.7		ND (0.0631)	ND (0.0025)	ND (0.0025)	ND (0.0025)	ND (0.0025)	ND (0.0025)	MD (0.0063)	ND (0.0025)	ND (0.0025)	ND (0.0025)	ND (0.0025)	ND (0.0025)	ND (0.0025)	ND (0.0025)
G-EX-BP	11/15/01	20	32.5		ND (0.0624)	ND (0.0025)	0.0040	ND (0.0025)	ND (0.0025)	ND (0.0025)	ND (0.0062)	0.0049	0.0025	ND (0.0025)	0.0090	0.0029	0.0070	ND (0.0025)
G-EX-BL	11/15/01	10.5	0.3		ND (0.0584)	ND (0.0023)	ND (0.0023)	ND (0.0023)	ND (0.0023)	ND (0.0023)	MD (0.0058)	ND (0.0023)	ND (0.0023)	ND (0.0023)	ND (0.0023)	ND (0.0023)	ND (0.0023)	ND (0.0023)
G-EX-NW	11/16/01	2	1.9		ND (0.0598)	ND (0.0024)	ND (0.0024)	ND (0.0024)	ND (0.0024)	ND (0.0024)	ND (0.0060)	ND (0.0024)	0.0035	ND (0.0024)	ND (0.0024)	ND (0.0024)	ND (0.0024)	ND (0.0024)
		4	1.6		ND (0.0655)	ND (0.0026)	ND (0.0026)	ND (0.0026)	ND (0.0026)	ND (0.0026)	ND (0.0066)	ND (0.0026)	ND (0.0026)	ND (0.0026)	ND (0.0026)	ND (0.0026)	ND (0.0026)	ND (0.0026)
		7	5.8		ND (0.0611)	ND (0.0024)	ND (0.0024)	ND (0.0024)	ND (0.0024)	ND (0.0024)	ND (0.0061)	ND (0.0024)	ND (0.0024)	ND (0.0024)	ND (0.0024)	ND (0.0024)	ND (0.0024)	ND (0.0024)
G-EX-N	11/16/01	2	5.7		NT	NT	NT	NT	NT	NT	NT	NT	NT	NT	NT	NT	NT	NT
		4	4.2		NT	NT	NT	NT	NT	NT	NT	NT	NT	NT	NT	NT	NT	NT
		6	2.7		NT	NT	NT	NT	NT	NT	NT	NT	NT	NT	NT	NT	NT	NT
		8	5.1		NT	NT	NT	NT	NT	NT	NT	NT	NT	NT	NT	NT	NT	NT
		10	5.0		ND (0.0646)	ND (0.0026)	ND (0.0026)	ND (0.0026)	ND (0.0026)	ND (0.0026)	ND (0.0065)	ND (0.0026)	ND (0.0026)	ND (0.0026)	ND (0.0026)	ND (0.0026)	ND (0.0026)	

Table 2: Gate Excavation Verification Soil Sample Laboratory Analytical Results
Former Unocal Chemical Distribution Facility
Wichita, Kansas

Sample ID	Date Sampled	Depth (feet)	PID Reading (PPM)	RSK	Detected VOCs (mg/kg)													
					Acetone	sec-BB	cis 1-2, DCE	E	IPB	4-IPT	N	n-propIB	Toluene	TCE	1,2,4 TMB	1,3,5, TMB	Xylenes (Total)	PCE
					3.8	9	0.80	55	NE	NE	140	44	40	0.20	27	7.8	700	0.18
GPAE	11/21/01	2	0.0		NT	NT	NT	NT	NT	NT	NT	NT	NT	NT	NT	NT	NT	NT
		4	0.0		NT	NT	NT	NT	NT	NT	NT	NT	NT	NT	NT	NT	NT	NT
		6	0.0		NT	NT	NT	NT	NT	NT	NT	NT	NT	NT	NT	NT	NT	NT
		8	5.7		ND (0.0600)	ND (0.0024)	ND (0.0024)	ND (0.0024)	ND (0.0024)	ND (0.0024)	ND (0.0060)	ND (0.0024)	ND (0.0024)	ND (0.0024)	ND (0.0024)	ND (0.0024)	ND (0.0024)	ND (0.0024)
		10	0.0		NT	NT	NT	NT	NT	NT	NT	NT	NT	NT	NT	NT	NT	NT
GPAS	11/21/01	8	NT		ND (0.0623)	ND (0.0025)	ND (0.0025)	ND (0.0025)	ND (0.0025)	ND (0.0025)	ND (0.0062)	ND (0.0025)	ND (0.0025)	ND (0.0025)	ND (0.0025)	ND (0.0025)	ND (0.0025)	ND (0.0025)
GAPN	11/21/01	8	NT		ND (0.0603)	ND (0.0024)	ND (0.0024)	ND (0.0024)	ND (0.0024)	ND (0.0024)	ND (0.0060)	ND (0.0024)	ND (0.0024)	ND (0.0024)	ND (0.0024)	ND (0.0024)	ND (0.0024)	ND (0.0024)
GPA	11/21/01	8	NT		ND (0.0600	ND (0.0024)	ND (0.0024)	ND (0.0024)	ND (0.0024)	ND (0.0024)	ND (0.0060)	ND (0.0024)	ND (0.0024)	ND (0.0024)	ND (0.0024)	ND (0.0024)	ND (0.0024)	ND (0.0024)
GP1	11/21/01	8	98.2		ND (0.0617)	ND (0.0025)	ND (0.0025)	0.0123	ND (0.0025)	0.0027	0.0141	0.0098	ND (0.0025)	ND (0.0025)	0.0665	0.0095	0.0310	ND (0.0025)
GP2	11/21/01	8	43.6		ND (0.0577)	ND (0.0023)	ND (0.0023)	ND (0.0023)	ND (0.0023)	ND (0.0023)	ND (0.0058)	ND (0.0023)	ND (0.0023)	ND (0.0023)	ND (0.0023)	ND (0.0023)	ND (0.0023)	ND (0.0023)
GPC	11/21/01	2	5.7		NT	NT	NT	NT	NT	NT	NT	NT	NT	NT	NT	NT	NT	NT
		4	3.1		NT	NT	NT	NT	NT	NT	NT	NT	NT	NT	NT	NT	NT	NT
		6	14.7		NT	NT	NT	NT	NT	NT	NT	NT	NT	NT	NT	NT	NT	NT
		8	5.3		ND (0.0653)	ND (0.0026)	ND (0.0026)	ND (0.0026)	ND (0.0026)	ND (0.0026)	ND (0.0065)	ND (0.0026)	ND (0.0026)	ND (0.0026)	ND (0.0026)	ND (0.0026)	ND (0.0026)	ND (0.0026)
		10	18.1		NT	NT	NT	NT	NT	NT	NT	NT	NT	NT	NT	NT	NT	NT
GPD	11/21/01	2	0.0		NT	NT	NT	NT	NT	NT	NT	NT	NT	NT	NT	NT	NT	NT
		4	0.0		NT	NT	NT	NT	NT	NT	NT	NT	NT	NT	NT	NT	NT	NT
		6	0.0		NT	NT	NT	NT	NT	NT	NT	NT	NT	NT	NT	NT	NT	NT
		8	0.0		ND (0.0587)	ND (0.0023)	ND (0.0023)	ND (0.0023)	ND (0.0023)	ND (0.0023)	ND (0.0059)	ND (0.0023)	ND (0.0023)	ND (0.0023)	ND (0.0023)	ND (0.0023)	ND (0.0023)	ND (0.0023)
		10	0.0		NT	NT	NT	NT	NT	NT	NT	NT	NT	NT	NT	NT	NT	NT

Table 2: Gate Excavation Verification Soil Sample Laboratory Analytical Results
Former Unocal Chemical Distribution Facility
Wichita, Kansas

Sample ID	Date Sampled	Depth (feet)	PID Reading (PPM)	RSK	Detected VOCs (mg/kg)													
					Acetone	sec-BB	cis 1-2, DCE	E	IPB	4-IPT	N	n-propIB	Toluene	TCE	1,2,4 TMB	1,3,5, TMB	Xylenes (Total)	PCE
					3.8	9	0.80	55	NE	NE	140	44	40	0.20	27	7.8	700	0.18
GPE	11/21/01	2	0.0		NT	NT	NT	NT	NT	NT	NT	NT	NT	NT	NT	NT	NT	NT
		4	0.0		NT	NT	NT	NT	NT	NT	NT	NT	NT	NT	NT	NT	NT	NT
		6	0.0		NT	NT	NT	NT	NT	NT	NT	NT	NT	NT	NT	NT	NT	NT
		8	5.7		ND (0.0611)	ND (0.0024)	ND (0.0024)	ND (0.0024)	ND (0.0024)	ND (0.0024)	ND (0.0061)	ND (0.0024)	ND (0.0024)	ND (0.0024)	ND (0.0024)	ND (0.0024)	ND (0.0024)	ND (0.0024)
		10	0.0		NT	NT	NT	NT	NT	NT	NT	NT	NT	NT	NT	NT	NT	NT
GPF	11/21/01	2	0.0		NT	NT	NT	NT	NT	NT	NT	NT	NT	NT	NT	NT	NT	NT
		4	0.0		NT	NT	NT	NT	NT	NT	NT	NT	NT	NT	NT	NT	NT	NT
		6	0.0		NT	NT	NT	NT	NT	NT	NT	NT	NT	NT	NT	NT	NT	NT
		8	3.1		ND (0.0575)	ND (0.0023)	ND (0.0023)	ND (0.0023)	ND (0.0023)	ND (0.0023)	ND (0.0058)	ND (0.0023)	ND (0.0023)	ND (0.0023)	ND (0.0023)	ND (0.0023)	ND (0.0023)	ND (0.0023)
		10	5.7		NT	NT	NT	NT	NT	NT	NT	NT	NT	NT	NT	NT	NT	NT
GP South Wall	11/26/01	4	NT		ND (0.0654)	ND (0.0026)	ND (0.0026)	ND (0.0026)	ND (0.0026)	ND (0.0026)	ND (0.0065)	ND (0.0026)	ND (0.0026)	ND (0.0026)	ND (0.0026)	ND (0.0026)	ND (0.0026)	ND (0.0026)
GPK	11/26/01	2	2.3		NT	NT	NT	NT	NT	NT	NT	NT	NT	NT	NT	NT	NT	NT
		4	2.5		NT	NT	NT	NT	NT	NT	NT	NT	NT	NT	NT	NT	NT	NT
		6	0.0		NT	NT	NT	NT	NT	NT	NT	NT	NT	NT	NT	NT	NT	NT
		8	0.0		ND (0.0600)	ND (0.0024)	0.0026	0.0036	ND (0.0024)	ND (0.0024)	ND (0.0060)	ND (0.0024)	ND (0.0024)	ND (0.0024)	0.0199	0.0047	0.0221	ND (0.0024)
GPI	11/26/01	2	2.3		NT	NT	NT	NT	NT	NT	NT	NT	NT	NT	NT	NT	NT	NT
		4	2.5		NT	NT	NT	NT	NT	NT	NT	NT	NT	NT	NT	NT	NT	NT
		6	0.0		NT	NT	NT	NT	NT	NT	NT	NT	NT	NT	NT	NT	NT	NT
		8	0.0		ND (0.0585)	ND (0.0023)	ND (0.0023)	ND (0.0023)	ND (0.0023)	ND (0.0023)	ND (0.0058)	ND (0.0023)	ND (0.0023)	ND (0.0023)	ND (0.0024)	ND (0.0023)	ND (0.0023)	ND (0.0023)

Table 2: Gate Excavation Verification Soil Sample Laboratory Analytical Results
Former Unocal Chemical Distribution Facility
Wichita, Kansas

Sample ID	Date Sampled	Depth (feet)	PID Reading (PPM)	RSK	Detected VOCs (mg/kg)													
					Acetone	sec-BB	cis 1-2, DCE	E	IPB	4-IPT	N	n-proplB	Toluene	TCE	1,2,4 TMB	1,3,5, TMB	Xylenes (Total)	PCE
					3.8	9	0.80	55	NE	NE	140	44	40	0.20	27	7.8	700	0.18
GPJ	11/26/01	2	7.4		NT	NT	NT	NT	NT	NT	NT	NT	NT	NT	NT	NT	NT	NT
		4	3.3		NT	NT	NT	NT	NT	NT	NT	NT	NT	NT	NT	NT	NT	NT
		6	4.4		NT	NT	NT	NT	NT	NT	NT	NT	NT	NT	NT	NT	NT	NT
		8	1.1		ND (0.0590)	ND (0.0024)	ND (0.0024)	ND (0.0024)	ND (0.0024)	ND (0.0024)	ND (0.0059)	ND (0.0024)	ND (0.0024)	ND (0.0024)	ND (0.0024)	ND (0.0024)	ND (0.0024)	ND (0.0024)
GPH	11/26/01	2	3.8		NT	NT	NT	NT	NT	NT	NT	NT	NT	NT	NT	NT	NT	NT
		4	4.0		NT	NT	NT	NT	NT	NT	NT	NT	NT	NT	NT	NT	NT	NT
		6	5.7		NT	NT	NT	NT	NT	NT	NT	NT	NT	NT	NT	NT	NT	NT
		8	2.5		ND (0.0608)	ND (0.0024)	ND (0.0024)	ND (0.0024)	ND (0.0024)	ND (0.0024)	ND (0.0061)	ND (0.0024)	ND (0.0024)	ND (0.0024)	ND (0.0024)	ND (0.0024)	ND (0.0024)	ND (0.0024)
GPM	12/3/01	2	6.1		NT	NT	NT	NT	NT	NT	NT	NT	NT	NT	NT	NT	NT	NT
		4	20.8		NT	NT	NT	NT	NT	NT	NT	NT	NT	NT	NT	NT	NT	NT
		6	5.0		NT	NT	NT	NT	NT	NT	NT	NT	NT	NT	NT	NT	NT	NT
		8	14.9		ND (0.0644)	ND (0.0026)	0.0089	ND (0.0026)	ND (0.0026)	ND (0.0026)	ND (0.0064)	ND (0.0026)	0.0054	ND (0.0026)	ND (0.0026)	ND (0.0026)	ND (0.0026)	ND (0.0026)
GPN	12/3/01	2	6.1		NT	NT	NT	NT	NT	NT	NT	NT	NT	NT	NT	NT	NT	NT
		4	6.4		NT	NT	NT	NT	NT	NT	NT	NT	NT	NT	NT	NT	NT	NT
		6	54.9		ND (30.60)	2.938	ND (1.224)	13.16	2.448	3.121	3.611	9.425	42.59	ND (1.224)	74.66	21.24	107.0	ND (1.224)
		8	22.0		NT	NT	NT	NT	NT	NT	NT	NT	NT	NT	NT	NT	NT	NT
GPO	12/3/01	2	6.3		NT	NT	NT	NT	NT	NT	NT	NT	NT	NT	NT	NT	NT	NT
		4	7.2		NT	NT	NT	NT	NT	NT	NT	NT	NT	NT	NT	NT	NT	NT
		6	4.7		NT	NT	NT	NT	NT	NT	NT	NT	NT	NT	NT	NT	NT	NT
		8	6.0		ND (0.0656)	ND (0.0026)	ND (0.0026)	ND (0.0026)	ND (0.0026)	ND (0.0026)	ND (0.0066)	ND (0.0026)	0.0063	ND (0.0026)	ND (0.0026)	ND (0.0026)	ND (0.0026)	ND (0.0026)
GPQ	12/3/01	6	0.7		ND (0.0585)	ND (0.0023)	ND (0.0023)	ND (0.0023)	ND (0.0023)	ND (0.0023)	ND (0.0059)	ND (0.0023)	ND (0.0023)	ND (0.0023)	ND (0.0023)	ND (0.0023)	ND (0.0023)	ND (0.0023)

Table 2: Gate Excavation Verification Soil Sample Laboratory Analytical Results
Former Unocal Chemical Distribution Facility
Wichita, Kansas

Sample ID	Date Sampled	Depth (feet)	PID Reading (PPM)	RSK	Detected VOCs (mg/kg)													
					Acetone	sec-BB	cis 1-2, DCE	E	IPB	4-IPT	N	n-propIB	Toluene	TCE	1,2,4 TMB	1,3,5, TMB	Xylenes (Total)	PCE
					3.8	9	0.80	55	NE	NE	140	44	40	0.20	27	7.8	700	0.18
GPR	12/3/01	2	8.3		NT	NT	NT	NT	NT	NT	NT	NT	NT	NT	NT	NT	NT	NT
		4	1.9		NT	NT	NT	NT	NT	NT	NT	NT	NT	NT	NT	NT	NT	NT
		6	4.7		NT	NT	NT	NT	NT	NT	NT	NT	NT	NT	NT	NT	NT	NT
		8	6.0		ND (0.0587)	ND (0.0023)	ND (0.0023)	ND (0.0023)	ND (0.0023)	ND (0.0023)	ND (0.0059)	ND (0.0023)	ND (0.0023)	ND (0.0023)	ND (0.0023)	ND (0.0023)	ND (0.0023)	ND (0.0023)
GPU		20	5.4		ND (0.3226)	ND (0.0129)	0.6968	ND (0.0129)	ND (0.0129)	ND (0.0129)	ND (0.0323)	ND (0.0129)	ND (0.0129)	0.0465	ND (0.0129)	ND (0.0129)	ND (0.0129)	0.0368

N:\ENV\PROJECTS\2001\01017118\Report\[Excav Anal_Gate.xls]Nov-Dec

NT = Not tested
mg/kg = Milligrams per kilogram
ND = Not detected, laboratory detection limits in parenthesis.
NE = Not established
PID = Photoionization Detector (MiniRae® 2000 with 11.7eV lamp)
PPM = Parts per million
RSK = Risk-Based Standards for Kansas, Tier 2, Soil to Groundwater, Non-Residential Scenario.
VOCs = Volatile organic compounds per EPA Method 8260
sec-BB = Butylbenzene
cis-1,2-DCE = cis-1,2-Dichloroethene
E = Ethylbenzene
IPB = Isopropylbenzene
4-IPT = 4-Isopropyltoluene
N = Naphthalene
n-propIB = n-Propylbenzene
TCE = Trichloroethene
1,2,4 TMB = 1,2,4 Trimethylbenzene
1,3,5 TMB = 1,3,5 Trimethylbenzene
PCE = Tetrachloroethene

G-EX-W = Gate Excavation West Wall on the laboratory analytical report
G-EX-SW = Gate Excavation SW Wall on the laboratory analytical report
G-EX-BP = Gate Excavation Bottom of Pit on the laboratory analytical report
G-EX-BL = Gate Excavation Bottom Ledge on the laboratory analytical report
G-EX-NW = Gate Excavation NW Wall on the laboratory analytical report
G-EX-N = Gate Excavation North Wall on the laboratory analytical report
GPA = GPA Bottom on the laboratory analytical report

Table 3: Pit 3 Verification Soil Sample Laboratory Analytical Results
Former Unocal Chemical Distribution Facility
Wichita, Kansas

Sample ID	Date Sampled	Depth (Feet)	PID Reading (PPM)	RSK	Detected VOCs (mg/kg)				
					cis-1,2, DCE	Methylene Chloride	PCE	Toluene	TCE
					0.80	0.03	0.18	40	0.20
East Wall	11/14/01	2	5.6		NT	NT	NT	NT	NT
		4	6.1		NT	NT	NT	NT	NT
		6	25.5		NT	NT	NT	NT	NT
		8	18.6		ND (0.0024)	ND (0.0024)	0.0267	0.0058	ND (0.0024)
		10	94.1		NT	NT	NT	NT	NT
Northeast Wall	11/14/01	2	2.1		NT	NT	NT	NT	NT
		4	0.0		NT	NT	NT	NT	NT
		6	3.4		NT	NT	NT	NT	NT
		8	0.0		ND (0.0023)	0.0083	0.0173	ND (0.0023)	ND (0.0023)
		10	52.5		NT	NT	NT	NT	NT
S Wall	11/20/01	2	0.0		NT	NT	NT	NT	NT
		4	0.0		NT	NT	NT	NT	NT
		6	0.0		NT	NT	NT	NT	NT
		8	0.0		ND (0.0024)	0.0095	0.0866	ND (0.0024)	ND (0.0024)
		10	48.7		NT	NT	NT	NT	NT
W Wall	11/20/01	2	0.0		NT	NT	NT	NT	NT
		4	0.0		NT	NT	NT	NT	NT
		6	0.0		NT	NT	NT	NT	NT
		8	0.0		0.0025	ND (0.0060)	0.1186	ND (0.0024)	ND (0.0024)
		10	44.5		NT	NT	NT	NT	NT

Table 3: Pit 3 Verification Soil Sample Laboratory Analytical Results
Former Unocal Chemical Distribution Facility
Wichita, Kansas

Sample ID	Date Sampled	Depth (Feet)	PID Reading (PPM)	RSK	Detected VOCs (mg/kg)				
					cis-1,2, DCE	Methylene Chloride	PCE	Toluene	TCE
					0.80	0.03	0.18	40	0.20
NW Wall	11/20/01	2	0.0		NT	NT	NT	NT	NT
		4	0.0		NT	NT	NT	NT	NT
		6	0.0		NT	NT	NT	NT	NT
		8	0.0		ND (0.0023)	ND (0.0058)	0.0186	ND (0.0023)	ND (0.0023)
		10	53.3		NT	NT	NT	NT	NT

N:\ENV\PROJECTS\2001\01017118\Report\[Excavation Analysis-Pits.xls]Pit 3

NT = Not tested
mg/kg = Milligrams per kilogram
ND = Not detected, laboratory limits in parenthesis.
PID = Photoionization Detector (MiniRae® 2000 with 11.7eV lamp)
PPM = Parts per million
RSK = Risk-Based Standards for Kansas, Tier 2, Soil to Groundwater, Non-Residential Scenario.
VOCs = Volatile organic compounds per EPA Method 8260
cis-1,2-DCE = cis-1,2-Dichloroethene
PCE = Tetrachloroethene
TCE = Trichloroethene

Table 4: Pit 1, 2, and 4 Verification Soil Sample Laboratory Analytical Results
Former Unocal Chemical Distribution Facility
Wichita, Kansas

Sample ID	Date Sampled	Depth (Feet)	PID Reading (PPM)	RSK	Detected VOCs (mg/kg)		
					cis 1,2-Dichloroethene	Tetrachloethene	Trichloroethene
					0.80	0.18	0.20
Pit 1 SW Wall (South and East Walls)	11/1/01	2	0.0		NT	NT	NT
		4	0.0		ND (0.005)	0.040	ND (0.005)
		6	0.0		NT	NT	NT
		8	0.0		NT	NT	NT
Pit 1 NW Wall (North and West Walls)	11/1/01	4	0.0		ND (0.005)	0.091	ND (0.005)
		4	0.0		NT	NT	NT
		6	0.0		NT	NT	NT
		8	0.0		NT	NT	NT
Bottom	11/6/01	8	0.0		0.01	0.34	0.012
	11/12/01	10	63.4		NT	NT	NT
	11/12/01	12.5	88.4		NT	NT	NT
Pit 2 NE Wall (North and East Walls)	11/1/01	2	0.0		NT	NT	NT
		4	0.0		ND (0.005)	0.044	ND (0.005)
		6	0.0		NT	NT	NT
		10	2.1		NT	NT	NT
		11.5	6.3		NT	NT	NT
Pit 2 SW Wall (South and West Walls)	11/1/01	2	0.0		NT	NT	NT
		4	0.0		ND (0.005)	0.009	ND (0.005)
		6	0.0		NT	NT	NT
		8	0.0		NT	NT	NT
		10	4.1		NT	NT	NT
		11.5	5.8		NT	NT	NT
Bottom	11/1/01	8	7.0		ND (0.005)	0.05	ND (0.005)

Terracon

Table 4: Pit 1, 2, and 4 Verification Soil Sample Laboratory Analytical Results
Former Unocal Chemical Distribution Facility
Wichita, Kansas

Sample ID	Date Sampled	Depth (Feet)	PID Reading (PPM)	RSK	Detected VOCs (mg/kg)		
					cis 1,2-Dichloroethene	Tetrachloethene	Trichloroethene
					0.80	0.18	0.20
Pit 4 NW Wall (North and West Walls)	11/1/01	2	0.0		NT	NT	NT
		4	0.0		ND (0.005)	ND (0.005)	ND (0.005)
		6	0.0		NT	NT	NT
		8	0.0		NT	NT	NT
Pit 4 SW Wall (South and East Walls)	11/1/01	2	0.8		NT	NT	NT
		4	0.0		ND (0.005)	0.048	ND (0.005)
		6	0.0		NT	NT	NT
		8	0.0		NT	NT	NT
Bottom	11/6/01	8	0.0		ND (0.005)	ND (0.005)	ND (0.005)

N:\ENV\PROJECTS\2001\01017118\Report\[Excavation Analysis-Pits.xls]Pit 1,2,4

NT = Not tested
mg/kg = Milligrams per kilogram
ND = Not detected, laboratory detection limits in parenthesis.
PID = Photoionization Detector (MiniRae® 2000 with 11.7eV lamp)
PPM = Parts per million
RSK = Risk-Based Standards for Kansas, Tier 2, Soil to Groundwater, Non-Residential Scenario.
VOCs = Volatile organic compounds per EPA Method 8260

Terracon

Appendix A

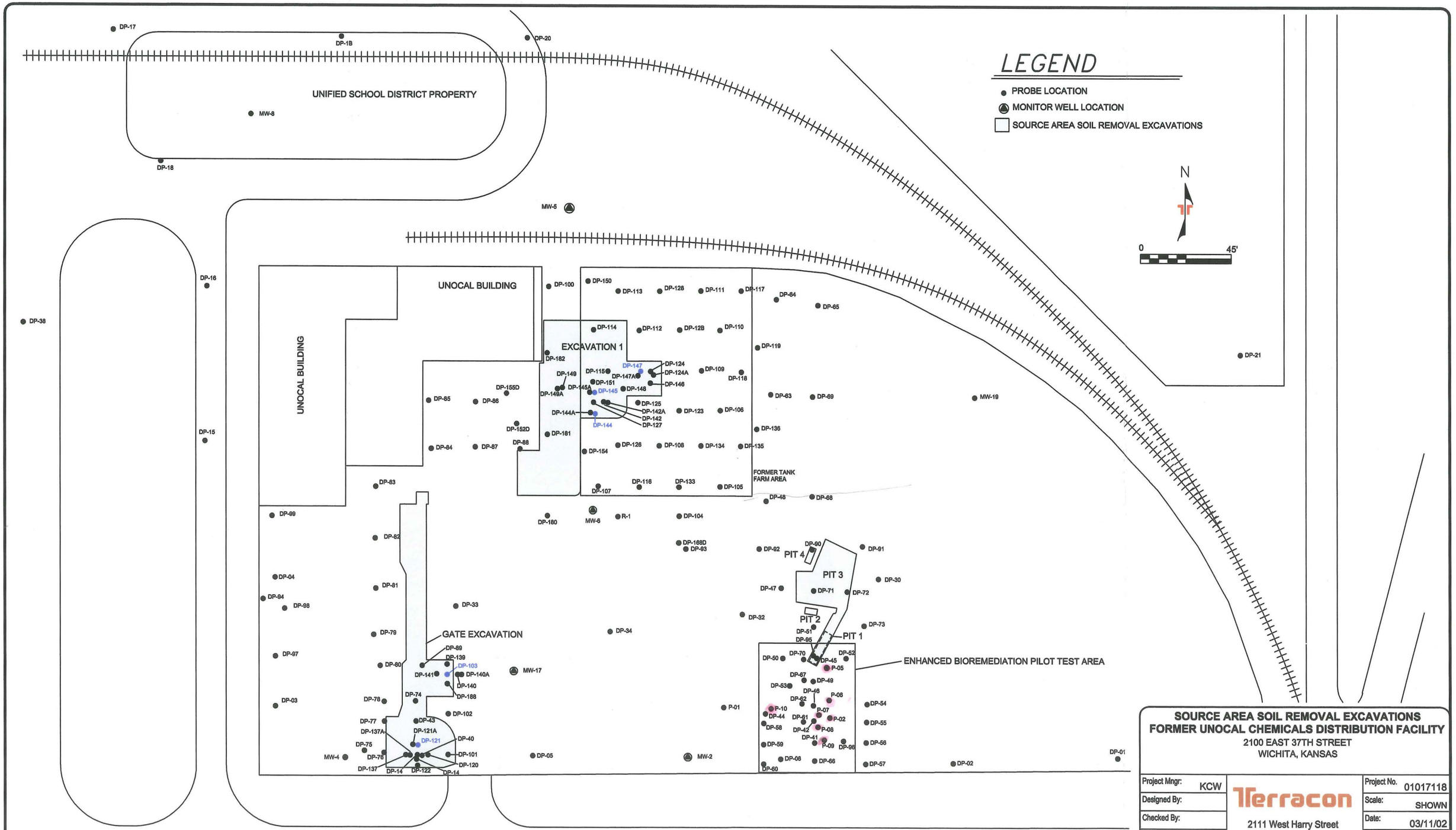

DIAGRAM IS FOR GENERAL LOCATION ONLY, AND IS NOT INTENDED FOR CONSTRUCTION PURPOSES

SOURCE AREA SOIL REMOVAL EXCAVATIONS
FORMER UNOCAL CHEMICALS DISTRIBUTION FACILITY
2100 EAST 37TH STREET
WICHITA, KANSAS

Project Mngr: KCW	Terracon	Project No.	01017118
Designed By:		Scale:	SHOWN
Checked By:	2111 West Harry Street Wichita, Kansas 67213	Date:	03/11/02
Approved By: KCW		Drawn By:	CWS
File Name:	SOILREMOVAL.DWG	Figure No.	1

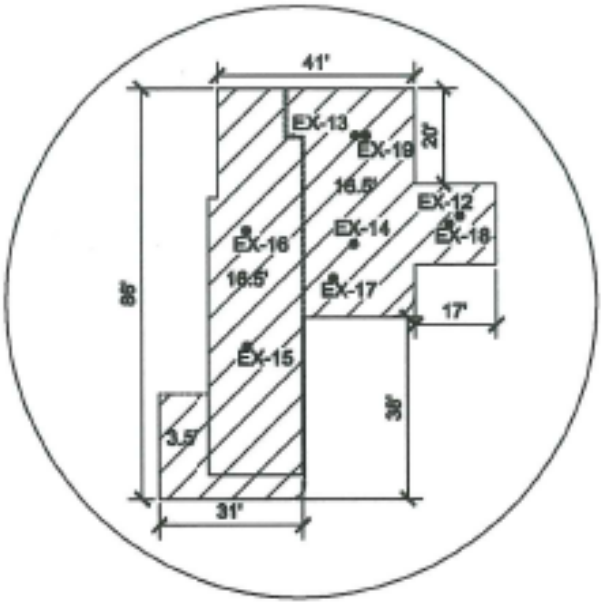

BOTTOM VIEW - EXCAVATION 1
SCALE SHOWN

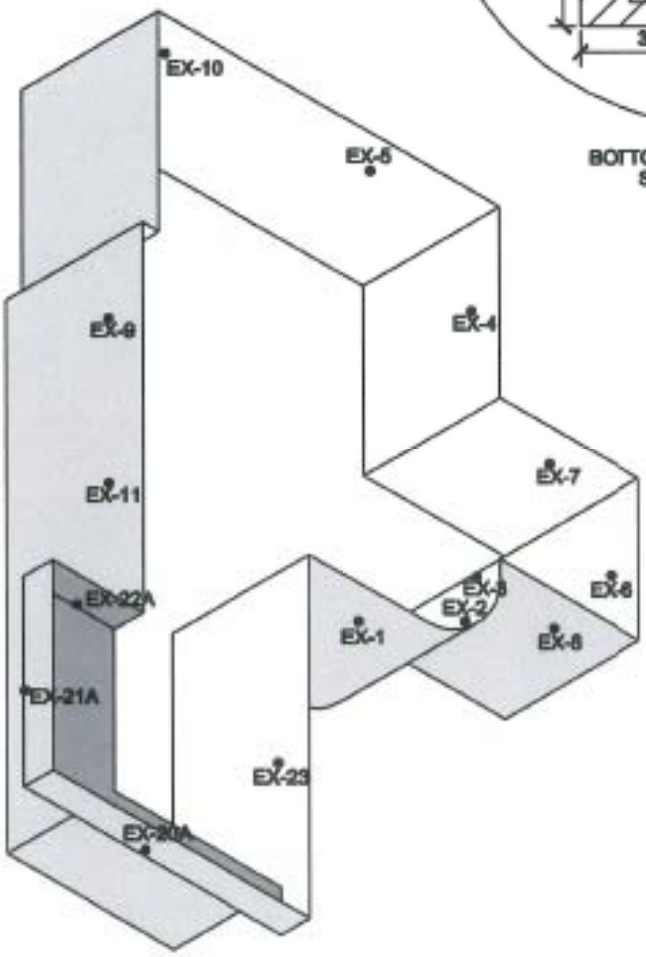

ISOMETRIC VIEW - EXCAVATION 1

LEGEND

● VERIFICATION SAMPLE LOCATION

FOR GENERAL LOCATON ONLY, NOT INTENDED FOR CONSTRUCTION PURPOSES

EXCAVATION 1 - SAMPLE LOCATION DIAGRAM
FORMER UNOCAL CHEMICAL DISTRIBUTION FACILITY
2100 EAST 37TH STREET
WICHITA, KANSAS

Project Mngr:	DDM	Terracon 2111 West Harry Street Wichita, Kansas 67213	Project No.	01017118
Designed By:			Scale:	SHOWN
Checked By:			Date:	01-29-02
Approved By:			Drawn By:	CWS
File Name:	01017118.DWG		Figure No.	2

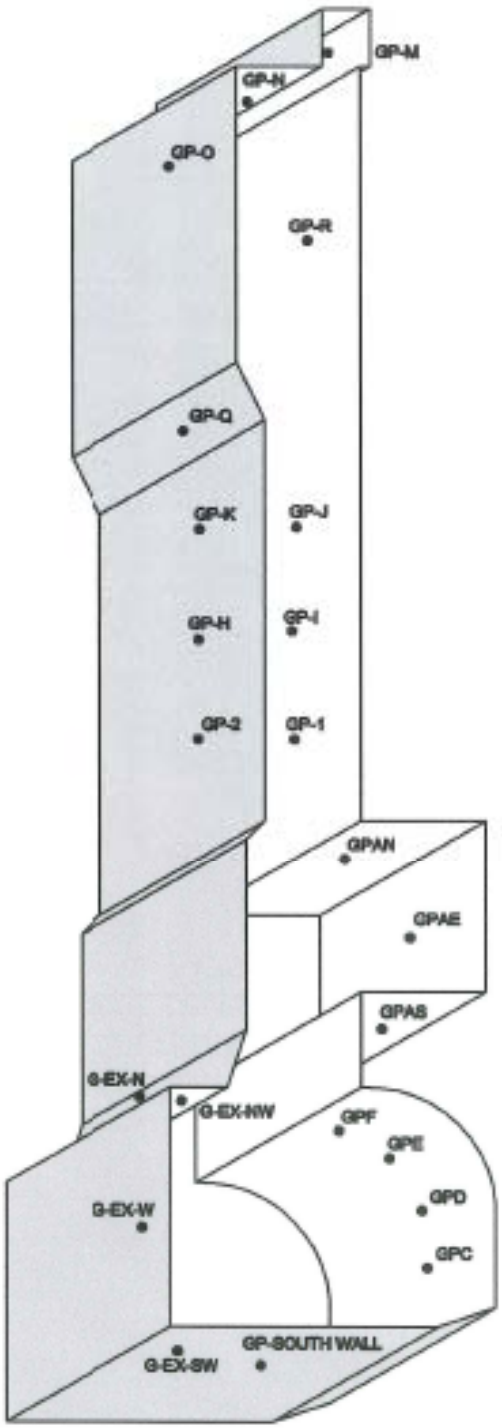

ISOMETRIC VIEW - GATE EXCAVATION

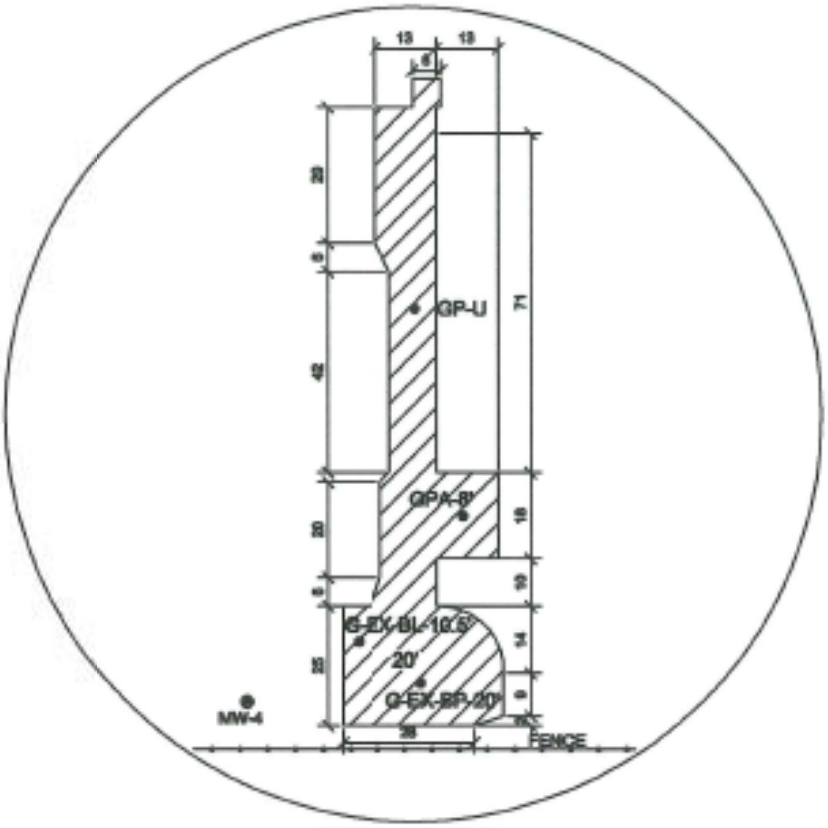

BOTTOM ELEVATION
SCALE IS SHOWN
20 FEET DEEP

LEGEND

● VERIFICATION SAMPLE LOCATION

FOR GENERAL LOCATION ONLY, NOT INTENDED FOR CONSTRUCTION PURPOSES

GATE EXCAVATION - SAMPLE LOCATION DIAGRAM
FORMER UNOCAL CHEMICAL DISTRIBUTION FACILITY
2100 EAST 37TH STREET
WICHITA, KANSAS

Project Mngr:	DDM	Terracon	Project No.	01017118
Designed By:			Scale:	SHOWN
Checked By:		2111 West Harry Street Wichita, Kansas 67213	Date:	01-29-02
Approved By:			Drawn By:	CWS
File Name:	NOVEMBER28.DWG		Figure No.	3

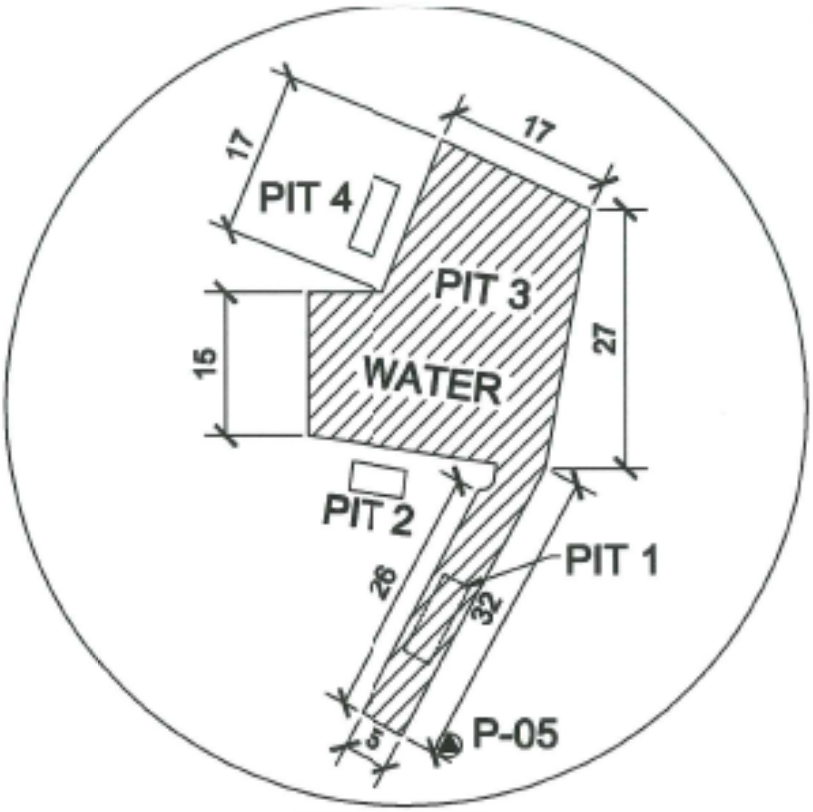

BOTTOM ELEVATION
SCALE IS SHOWN
16.5 FEET DEEP

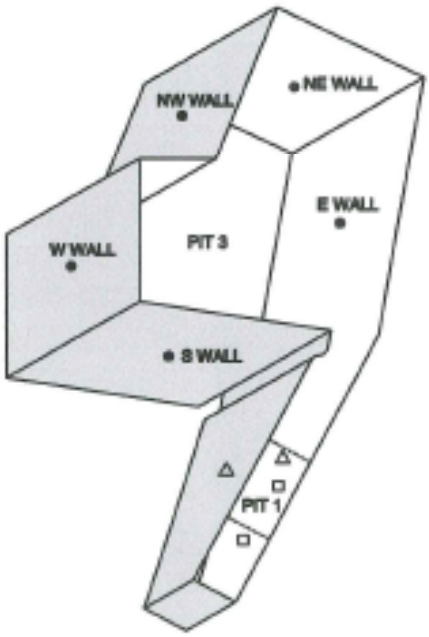

ISOMETRIC VIEW - PIT 3

LEGEND

- ● VERIFICATION SAMPLE LOCATION
- □ PIT 1 COMPOSITE SAMPLE SOUTH AND EAST WALL 4 FEET BELOW GRADE
- △ PIT 1 COMPOSITE SAMPLE NORTH AND WEST WALL 4 FEET BELOW GRADE

FOR GENERAL LOCATION ONLY, NOT INTENDED FOR CONSTRUCTION PURPOSES

PIT 3 EXCAVATION - SAMPLE LOCATION DIAGRAM
FORMER UNOCAL CHEMICAL DISTRIBUTION FACILITY
2100 EAST 37TH STREET
WICHITA, KANSAS

Project Mngr:	DDM	Terracon	Project No.	01017118
Designed By:			Scale:	SHOWN
Checked By:		2111 West Harry Street Wichita, Kansas 67213	Date:	01-29-02
Approved By:			Drawn By:	CWS
File Name:	NOVEMBER29.DWG		Figure No.	4

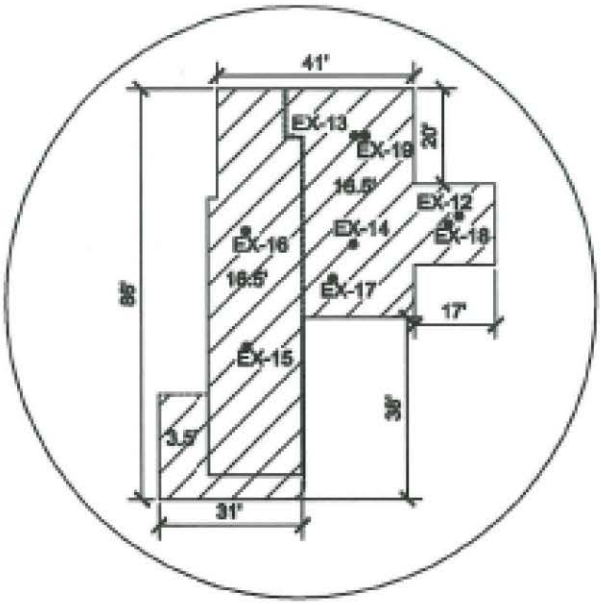

BOTTOM VIEW - EXCAVATION 1
SCALE SHOWN

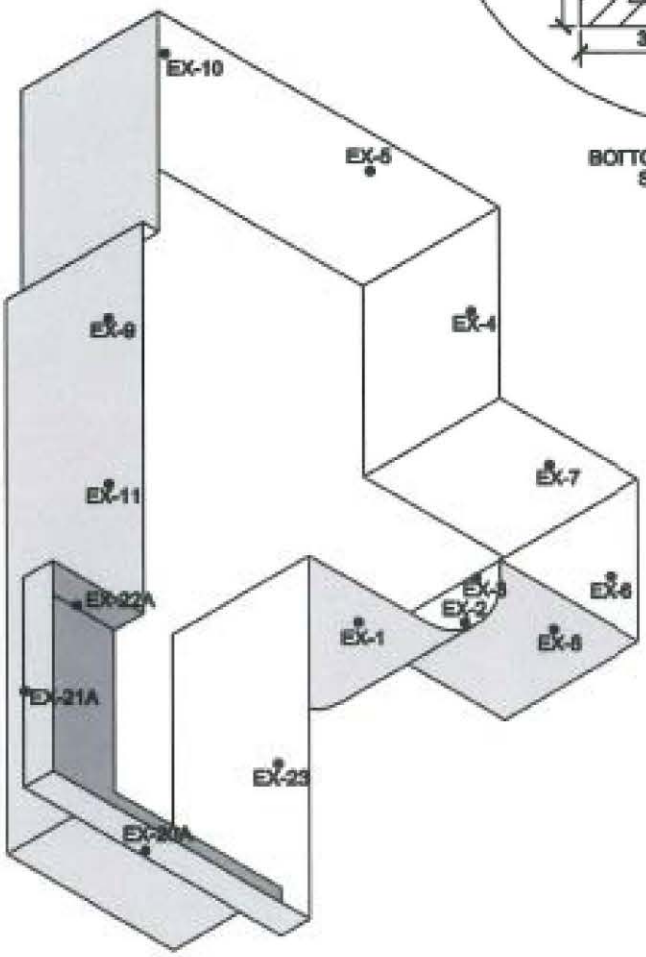

ISOMETRIC VIEW - EXCAVATION 1

LEGEND

● VERIFICATION SAMPLE LOCATION

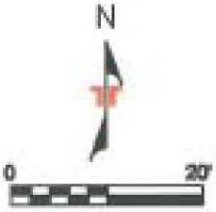

FOR GENERAL LOCATON ONLY, NOT INTENDED FOR CONSTRUCTION PURPOSES

EXCAVATION 1 - SAMPLE LOCATION DIAGRAM
FORMER UNOCAL CHEMICAL DISTRIBUTION FACILITY
2100 EAST 37TH STREET
WICHITA, KANSAS

Project Mngr:	DDM	Terracon 2111 West Harry Street Wichita, Kansas 67213	Project No.	01017118
Designed By:			Scale:	SHOWN
Checked By:			Date:	01-29-02
Approved By:			Drawn By:	CWS
File Name:	01017118.DWG		Figure No.	2

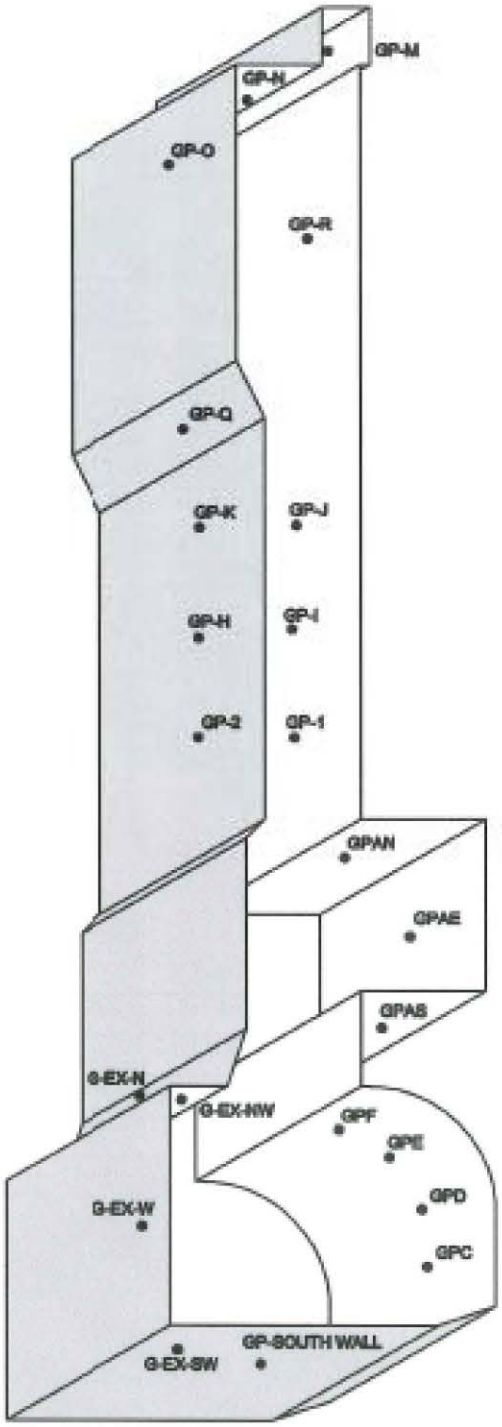

ISOMETRIC VIEW - GATE EXCAVATION

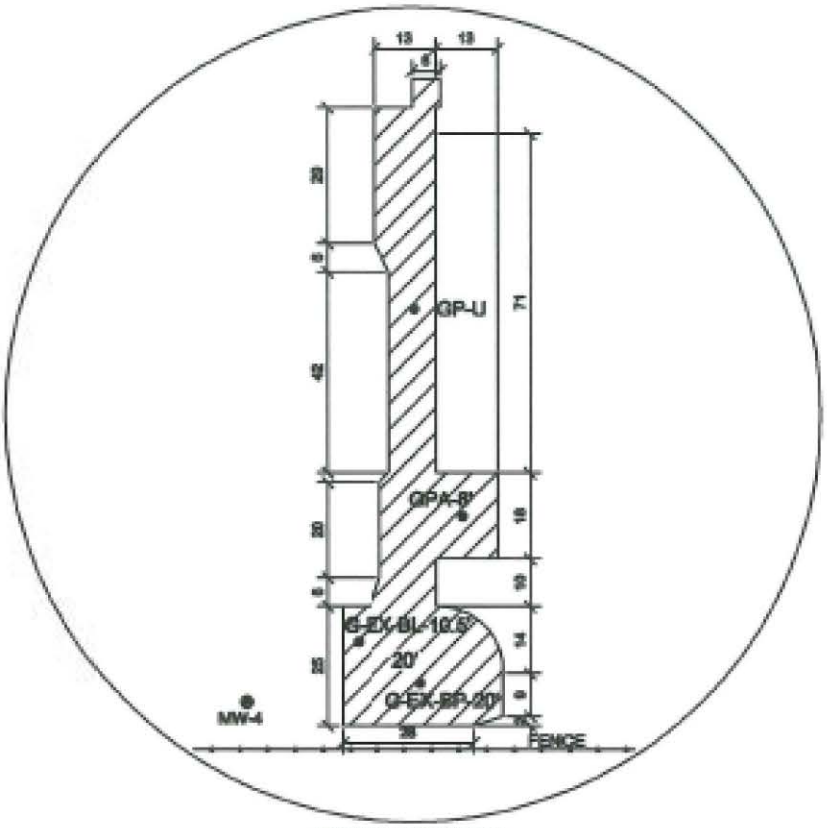

BOTTOM ELEVATION
SCALE IS SHOWN
20 FEET DEEP

LEGEND

● VERIFICATION SAMPLE LOCATION

N

0 20'

FOR GENERAL LOCATION ONLY, NOT INTENDED FOR CONSTRUCTION PURPOSES

GATE EXCAVATION - SAMPLE LOCATION DIAGRAM
FORMER UNOCAL CHEMICAL DISTRIBUTION FACILITY
2100 EAST 37TH STREET
WICHITA, KANSAS

Project Mngr:	DDM	Terracon	Project No.	01017118
Designed By:			Scale:	SHOWN
Checked By:		2111 West Harry Street Wichita, Kansas 67213	Date:	01-29-02
Approved By:			Drawn By:	CWS
File Name:	NOVEMBER26.DWG		Figure No.	3

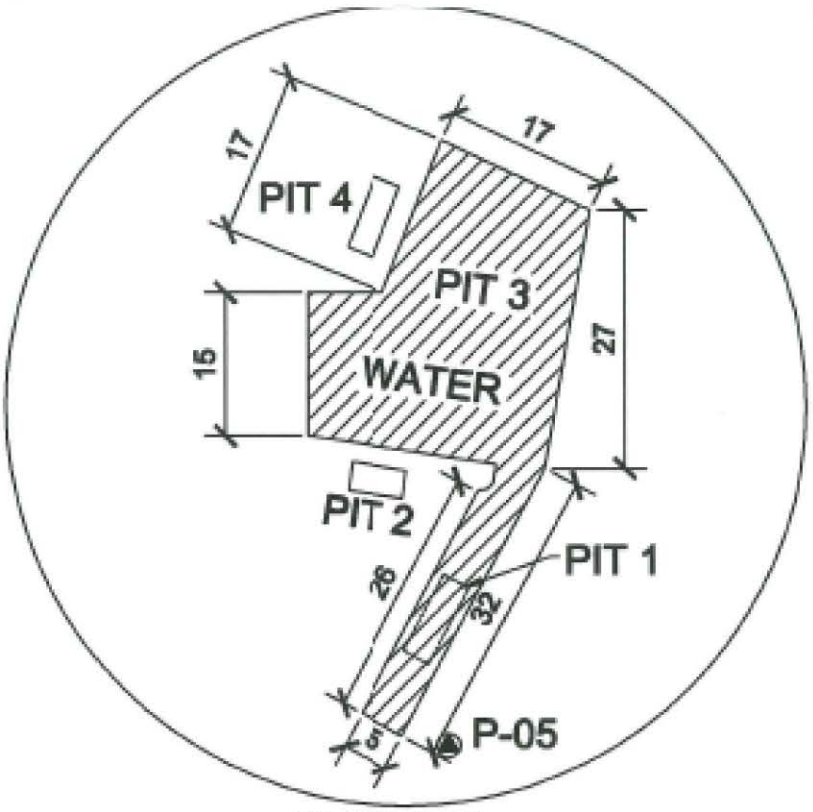

BOTTOM ELEVATION
SCALE IS SHOWN
16.5 FEET DEEP

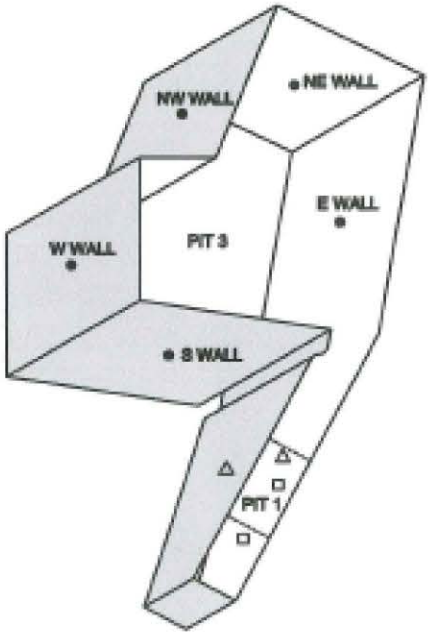

ISOMETRIC VIEW - PIT 3

LEGEND

- ● VERIFICATION SAMPLE LOCATION
- □ PIT 1 COMPOSITE SAMPLE SOUTH AND EAST WALL 4 FEET BELOW GRADE
- △ PIT 1 COMPOSITE SAMPLE NORTH AND WEST WALL 4 FEET BELOW GRADE

FOR GENERAL LOCATION ONLY, NOT INTENDED FOR CONSTRUCTION PURPOSES

PIT 3 EXCAVATION - SAMPLE LOCATION DIAGRAM
FORMER UNOCAL CHEMICAL DISTRIBUTION FACILITY
2100 EAST 37TH STREET
WICHITA, KANSAS

Project Mngr:	DDM	Terracon	Project No.	01017118
Designed By:			Scale:	SHOWN
Checked By:		2111 West Harry Street Wichita, Kansas 67213	Date:	01-29-02
Approved By:			Drawn By:	CWS
File Name:	NOVEMBER29.DWG		Figure No.	4

Appendix B

Unocal - Wichita, Kansas
Project No. 01017118

Excavation 1 - about 16.5 feet BGS, looking northwest from the southeast corner of excavation

Excavation 1 - about 16.5 feet BGS, southwest wall, looking south (groundwate in excavation)

Terracon

Unocal -Wichita, Kansas
Project No. 01017118

Excavation 1 - North sidewall about 16.5 feet BGS

Pits 1, 2, 3, and 4 near former enhanced bioremediation pilot test area

Terracon

Pit 3 Excavation, looking northwest (Pit 4 in the background)

Pit 3 Excavation, about 16.5 feet BGS, looking southeast (groundwater in bottoom of excavation)

Unocal - Wichita, Kansas
Project No. 01017118

Pit 1 Excavation - about 13 feet BGS, (groundwater bottom of pit)

Pit 1 joining Pit 3, looking south

Terracon

Unocal - Wichita, Kansas
Project No. 01017118

Gate excavation - north wall showing clay piping from drainage downspout

Loading excavated soils for transport to Lone Mountain facility

Terracon

Appendix D

one Mountain 03/12/02

NOTIFICATION OF WASTE ACCEPTANCE

CUSTOMER INFORMATION
EPA ID#: KSD096535026
UNOCAL CHEMICAL DISTRIBUTION
2100 EAST 37TH STREET NORTH
WICHITA, KS 67219
CONTACT: CHRIS MEYER
PHONE: (847) 310-6809

INVOICE INFORMATION
REF #: 913753
UNOCAL CORPORATION
2300 BARRINGTON ROAD SUITE 500
HOFFMAN ESTATES, IL 60195-
CONTACT: CHRIS MEYER
PHONE: (847) 310-6809

PROF. SHEET #:010570 SAMPLE #: LM01-0570 WASTE STREAM #: **LM01-0570**
RECEIVED: 10/31/01 WASTE NAME: SOLVENT IMPACTED SOILS

Thank you for selecting SKI for your waste management requirements. Your waste stream has been reviewed and is acceptable for management at our facility based on the information provided on the profile sheet number listed above and conditions listed below. Our facility has the necessary permits to allow the storage, treatment, or disposal of this waste. The above referenced acceptance number should be listed on all shipping documents and correspondence. Please retain these documents for your records and future reference.

Please contact Customer Service at (580) 697-3500 should you have any questions. To schedule a shipment, contact SKI customer service at 1-800-877-2416.

SKI Sales Representative: BERNARD WOLTERS

ACCEPTANCE INFORMATION

The waste identified by the waste stream number above is
Acceptable for: LANDFILL/DISPOSAL
This waste is acceptable for delivery beginning on 10/17/01 thru 10/16/02, at which time an update review may be required for continued acceptability.

Comments:
GENERATOR MUST CERTIFY WASTE MEETS ALTERNATIVE SOIL TREATMENT STANDARDS. NO UHC'S PER THE GENERATOR. VOC's ARE <500 ppmw PER THE GENERATOR.

Shipping Requirements:
A Notification and Certification are required in accordance with 40 CFR Section 268.7
A current Disposal Plan must be on file with the DEQ and also with the Lone Mountain Facility.
All large quantity generators shall include the disposal plan number on the Hazardous Waste Manifest before offering waste for shipment.

Type of Container: BULK

PROFILE SHEET #: 010570 SAMPLE #: LM01-0570 WASTE NUMBER #: LM01-0570

WASTE STREAM ANALYSIS INFORMATION

Waste Name.....: SOLVENT IMPACTED SOILS
Physical State.....: SOLID
Process Producing Waste..: SITE CLEAN UP

EPA Waste Codes:
U002 U043 U076 U077 U078 U079 U159 U165 U210 U220 U226 U228
U239

PREACCEPTANCE SAMPLE RESULTS

COLOR/APPEARANCE	BROWN	PHYSICAL STATE	SOLID
DUST PRESENT	NEG	FREE LIQUIDS%	NEG
RADIOACTIVITY SCREEN	NEG	ODOR	NEG
SPECIFIC GRAVITY (g/	1.25	pH RANGE	6.29
WATER SOLUBILITY	NEG	WATER REACTIVITY	NEG
NORMALITY	NA	OXIDIZER TEST	NEG
TLV SNIFF	<200	FLASH POINT RANGE	NEG
SOLID %	NA	HOC SCREEN	NEG
CN SCREEN	NEG	SULFIDE SCREEN	NEG

This analysis is solely for use by SKI employees for the purpose of determining waste acceptability. No other claims are made or implied.

SAFETY-KLEEN

NAME OF WASTE STREAM: 010570 SOLVENT IMPACTED SOILS

MATERIAL PROFILE NO.: LM01-0570

☐ New ☐ Amendment ☒ LQG ☐ SQG ☐ CSQG Expiration: 10/16/02

A. GENERATOR INFORMATION

Generator Name: UNOCAL CHEMICAL DISTRIBUTION
Facility Address: 2100 EAST 37TH STREET NORTH
City/County: WICHITA / SEDGWICK
State: KS Zip Code: 67219
USEPA ID#: KSD096535026
State ID#:

Technical Contact: CHRIS MEYER
Telephone(847) 310-6809 EXT.
Fax(847) 310-6890
Billing Name: UNOCAL CORPORATION
Billing Address: 2300 BARRINGTON ROAD SUITE 500
City: HOFFMAN ESTATES State: IL Zip Code: 60195-2082
Attention: CHRIS MEYER
Telephone(847) 310-6809 EXT.

B. DOT Shipping Name: Hazardous waste, solid, n.o.s.
Tech. Con.:
Hazard Class: 9 Zone: Label Req: CLASS 9
UN/NA No.: NA3077 Packing Group: III RQ: (U078,U159)

C. RCRA RCRA Non Hazardous/Exempt? ☐ Yes ☒ No Process Generating: SITE CLEAN UP
State Waste Codes:
EPA Waste Codes: U002, U043, U078, U077, U078, U079, U159, U165, U210, U220 **MORE CODES ON CONT. SHEET**

D. ANNUAL REPORT CODES

SIC Code: 5 1 6 9
Source Code: A
Form Code: B 3 0 1
Origin Code:
System Type: M

E. OTHER COMPONENTS

	No	Yes	Total ppm
PCB's	☒	☐	
Cyanides	☒	☐	
Sulfides	☒	☐	
Pesticides	☒	☐	
Phenolics	☒	☐	
Dioxins	☒	☐	
Halogens	☒	☐	%

F. PHYSICAL CHARACTERISTICS AT 70° F

1. Infectious or Biological Waste? ☐ Yes ☒ No
2. NRC Regulated Radioactive? ☐ Yes ☒ No
3. Reactivity ☒ None ☐ Water Reactive ☐ Pyrophoric ☐ Shock Sensitive ☐ Cyanides ☐ DOT Explosive ☐ Sulfides ☐ Other

☐ Gas (Cylinder) ☒ Solid 100 % %
☐ Aerosol ☐ Sludges %
☐ Lab-Pack ☐ Free Liquids %
100%

Layers: ☐ Single Layered ☐ Bi-layered ☐ Multi-layered

Viscosity: ☐ Low ☐ Medium ☐ High

Odor: ☒ None ☐ Mild ☐ Strong Describe:

Color/Appearance: BROWN

Weight
Density lbs./gal.(US,liq) lbs./cu. foot
Dry Weight ☐ <1.0% ☐ 5-20% ☐ 1-5% ☐ 20-100%

pH ☐ N/A ☐ 0-2 ☐ 4.1-10 ☐ ≥12.5 ☐ 2.1-4 ☐ 10.1-12.4 Exact >4-10

Flash Point (liquid only)
☐ <73°F (23°C)
☐ 73-140°F (23-60°C)
☐ 142-200°F (61-93°C)
☐ >200°F (93°C)
☐ Exact N/A

Boiling Point
☐ <95°F (35°C)
☐ >95°F (35°C)
☐ Exact

BTU/Lb.
<500

Dermal Toxicity LD_{50} (Mg/Kg)
☐ ≤40 ☐ <200,≤1000
☐ >40,≤200 ☐ >1000

4. Material poisonous by inhalation? ☐ Yes ☒ No

Oral Toxicity LD_{50} (Mg/Kg)
☐ ≤5 ☐ >5,≤50
Solids: ☐ >50,≤200 ☐ >200
Liquids: ☐ >50,≤500 ☐ >500

5. Is this waste stored in vented drums? ☐ Yes ☒ No
6. Is this waste pumpable? ☐ Yes ☒ No
7. Is this waste polymerizable? ☐ Yes ☒ No
8. Is waste stream subject to the National Emission Standards for Benzene Waste Operations (40 CFR 61 Subpart FF)? ☐ Yes ☒ No
9. Is this waste regulated as an ozone depleting substance (40 CFR part 82)? ☐ Yes ☒ No
10. Does this waste contain scrap metal pieces greater than 2 inches in size? ☐ Yes ☒ No

G. METALS
☒ NONE ☐ TCLP (MG/L) ☐ TOTAL (PPM)

	Reg. Limit	Below	Above	Range
Arsenic	5 mg/L	☐	☐	
Barium	100 mg/L	☐	☐	
Cadmium	1 mg/L	☐	☐	
Chromium	5 mg/L	☐	☐	
Copper		☐	☐	
Lead	5 mg/L	☐	☐	
Mercury	0.2 mg/L	☐	☐	
Nickel	134 mg/L	☐	☐	
Selenium	1 mg/L	☐	☐	
Silver	5 mg/L	☐	☐	
Zinc		☐	☐	

Others:

H. PHYSICAL/CHEMICAL CONSTITUENTS

SOIL	95.00-97.00%
DEBRIS	3.00-5.00%
1,1,2-Trichloroethane	- 18.00PPB
1,1,1-Trichloroethane	7.00-960.00PPB
1,1-Dichloroethane	8.00-220.00PPB
1,1-Dichloroethene	7.00-1200.00PPB
1,2,4-Trimethylbenzene	0.01-820.00PPM
Tetrachloroethane	5.00-22000.00PPB
Toluene	0.01-810.00PPM
Vinyl chloride	0.01-1.20PPM
Xylene	0.05-700.00PPM

MORE CONSTITUENTS ON CONTINUATION SHEET
(Attach All MSDS, Sample Analysis and Additional Info.)

I. ANTICIPATED VOLUME

Qty.	Container	Qty.	Container
☐	5 gl. pail	☐	Cubic Yard Box*
☐	15 gl. carboy	☐	Super Sack*
☐	30 gl. drum	☐	Rolloff/Dump Trailer*
☐	55 gl. drum	☐	Tanker*
☐	85 gl. drum	☒ 2000.00	Other YD

Per ☐ 1 Time ☐ Week ☐ Month ☐ Year ☒ Other OT

(*) Is this waste regulated as a Marine Pollutant (49 CFR 171.8)? ☐ Yes ☒ No

Generator's Certification:
I hereby certify that the above and attached description is complete and accurate to the best of my knowledge and ability to determine that no deliberate or willful omissions of composition properties exist and that all known or suspected hazards have been disclosed. I certify that the materials tested are representative of all material described by this profile.

SAFETY-KLEEN

NAME OF WASTE STREAM	MATERIAL PROFILE NO.
010570 SOLVENT IMPACTED SOILS	LM01-0570

CONTINUATION SHEET

Additional EPA Codes: U226, U228, U239

Additional Physical/Chemical Constituents:

1,2-Dichloroethene	0.01-150.00PPM
Styrene	5.00-6.00PPB
1,2-Dichlorobenzene	330.00-380.00PPB
Naphthalene	2.00-3600.00PPB
Trichloroethene	8.00-760.00PPB
Trichlorofluoromethane (CFC-11)	7.00-8.00PPB
Ethylbenzene	0.01-70.00PPM
Carbon disulfide	10.00-27.00PPB
Vinyl acetate	13.00-14.00PPB
1,2-Dichloroethane	= 14.00PPB
2-Butanone (8CI,9CI)	43.00-4700.00PPB
Methyl chloride	= 3.00PPB
4-Methyl-2-pentanone	= 57.00PPB

Additional Information:

ARRIVAL NOTIFICATION		PETROLEUM	
AUTOPOLYMERIZABLE		REACTIVE	
BIODEGRADABLE SORBENTS		CONTAMINATED SOIL	YES
CERTIFICATION REQUIRED	YES	SPECIFIC GRAVITY	
CONTAINS DEBRIS		THERMALLY SENSITIVE	
FUMING ACIDS		ASBESTOS	
GENERATOR'S SIGNATURE	CHRISTOPHER A. MEYER	Notification required	YES
HYDROPHORIC		FEDERAL CERTIFICATION CODES	C
NORMALITY	NA	STATE CERTIFICATION CODES	C
OXIDIZERS			

OKLAHOMA DEPARTMENT OF ENVIRONMENTAL QUALITY
DISPOSAL PLAN APPLICATION
(405) 702-5100 / Fax (405) 702-5101

DISPOSAL PLAN FOR A: ☐ CONTINUOUS PLAN ☒ ONE-TIME PLAN

See instructions on reverse side before completing this form.

GENERATOR'S EPA ID NO:

K	S	D	0	9	6	5	3	5	0	2	6

☒ New Plan ☐ Amendment to Active Plan, # _____ ☐ Amendment to existing waste stream, SN _____

Business/Plant Name: UNOCAL CHEMICAL DISTRIBUTION

Mailing Address: 2100 E 37TH ST NORTH City: WICHITA State: KS Zip: 67219

Plant Address/ Location: _____ City: _____ State: _____ Zip: _____

Plant Contact: CHRIS MEYER Title: _____ Telephone: (847)310-6809

DETAILED WASTE DESCRIPTION

DOT Shipping Name, Hazard Class, UN/NA Number: HAZARDOUS WASTE, SOLID, N.O.S. 9, NA3077 III

Waste Name: SOLVENT IMPACTED SOILS

EPA Waste Code(s) (use additional sheets if necessary): U078, U159

Amount of Waste Produced

No. of Lbs.: 4000000 Frequency: ☐ Day ☐ Week ☐ Month ☐ Year

Physical: ☒ Liquid ☐ Sludge ☐ Solid ☐ Layered

Chemical: ☐ Ignitable (Flash Point __°F) ☐ Corrosive (pH__) ☐ Reactive

☐ Laboratory analysis attached. (NOT INCLUDING ANALYSIS MAY DELAY DISPOSAL PLAN APPROVAL.)
Material Safety Data Sheet(s) are acceptable for off-specification products only.

PROCESS GENERATING WASTE (SEE INSTRUCTIONS, USE ADDITIONAL SHEETS IF NECESSARY)

SITE CLEANUP

TSD INFORMATION

Site receiving waste: SAFETY-KLEEN LONE MOUNTAIN FACILITY Telephone: (580)6970-3500

Mailing address: RT 2, BOX 170 City: WAYNOKA State: OK Zip: 73860

Site location: 5 MI. E. & 1 MI N. OF JUCT HWY 281 & 412 EPA ID: OKD065438376

CERTIFICATION

The above information is accurate to the best of my knowledge. I will only use those transporters registered with the Waste Management Division to pick up hazardous wastes within the State of Oklahoma or to transport hazardous wastes to an appropriate receiving facility in the State of Oklahoma.

Signature: [signature] for Unocal Date: 10/22/01
Person in charge of plant or plant contact

Christopher A MEYER
Typed or printed name

For DEQ use only: Approved by: _____ Date: _____

safety-kleen.

LDR NOTIFICATION FORM

Generator Name *UNOCAL CHEMICAL DISTRIBUTION* Manifest No. *00001*

Pursuant to 40 CFR §268.7(a), I hereby notify that this shipment contains waste restricted under 40 CFR Part 268 Land Disposal Restrictions (LDR).

A. GENERAL WASTE NOTIFICATION

Form Line No.	SK Profile No.	EPA Waste Codes & LDR Subcategories (if any) *List codes or use Attachment 1*	NWW	WW	Waste Constituent Notification *Check the "None" box or List Legend Constituent # or use Attachment 2*
1	*LM01-0570*	☒ Check if Attachment 1 has been used	☒	☐	☐ None ☐ Check if Attachment 2 has been used
2		☐ Check if Attachment 1 has been used	☐	☐	☐ None ☐ Check if Attachment 2 has been used
3		☐ Check if Attachment 1 has been used	☐	☐	☐ None ☐ Check if Attachment 2 has been used
4		☐ Check if Attachment 1 has been used	☐	☐	☐ None ☐ Check if Attachment 2 has been used
5		☐ Check if Attachment 1 has been used	☐	☐	☐ None ☐ Check if Attachment 2 has been used
6		☐ Check if Attachment 1 has been used	☐	☐	☐ None ☐ Check if Attachment 2 has been used

B. HAZARDOUS DEBRIS NOTIFICATION

☐ This hazardous debris, as identified above on Line No(s). _____ is subject to the alternative treatment standards of 40 CFR §268.45.
The waste contains the following contaminants subject to treatment (check all that apply):
☐ Toxicity characteristic debris ☐ Debris contaminated with listed waste ☐ Cyanide reactive debris

C. CONTAMINATED SOIL NOTIFICATION & CERTIFICATION

☒ This contaminated soil, as identified above on Line No(s). *1* is subject to the alternative treatment standards of 40 CFR §268.49(c).
Complete the following: "I certify under penalty of law that I personally have examined this contaminated soil & it [☐does/ ☐does not] contain listed hazardous waste & [☐does / ☒does not] exhibit a characteristic of hazardous waste & [☐is subject to / ☒complies with] soil treatment standards as provided by §268.49(c) or the universal treatment standards". *Note: Constituents subject to treatment are any constituents listed in 40 CFR §268.48 Universal Treatment Standards that are reasonably expected to be present in any given volume of contaminated soil, except fluoride, selenium, sulfides, vanadium & zinc, & are present at concentrations greater than ten times the universal treatment standard.*

D. LAB PACK (INCINERATION) NOTIFICATION & CERTIFICATION

☐ This lab pack, as identified above on Line No(s). _____ is subject to the alternative treatment standards of 40 CFR §268.42(c).
"I certify under penalty of law that I personally have examined & am familiar with the waste & that the lab pack contains only wastes that have not been excluded under Appendix IV to 40 CFR Part 268 & that this lab pack will be sent to a combustion facility in compliance with the alternative treatment standards for lab packs at 40 CFR §268.42(c). I am aware that there are significant penalties for submitting a false certification, including the possibility of fine or imprisonment".

E. EXTENSIONS & VARIANCES

☐ This waste, as identified above on Line No(s). _____ is not prohibited from land disposal & is subject to a deadline extension or variance, e.g., treatability variance, case-by-case extension. *Describe below any extension or variance that applies to this waste & include applicable dates:*

Generator's Authorized Signature	Name & Title (Printed or Typed)	Date
for Unocal	Christopher A Mienger, Senior Engineer	10 / 31 / 01

DWALKER.LDR.NOTIFICATION.11.23.98

LDR ATTACHMENT 1: EPA WASTE CODE LISTING

Note: If this form is necessary for notification purposes, it must be used inconjunction with the Notification form and/or Certification form.

Generator Name *UNOCAL CHEMICAL DISTRIBUTION* **Manifest No.** *00001*

Line #'s	EPA Code	Line #'s	EPA Code	Line #'s	EPA Code	Line #'s	EPA Code	Line #'s	EPA Code	Line #'s	EPA Code
					"D" Characteristic Codes						
	D001 ICW		D004		D009 HM (Organic)		D017		D026		D035
	D001 LQ (≥10% TOC)		D005		D009 HM (Inorganic)		D018		D027		D036
	D002		D006		D010		D019		D028		D037
	D003 EX		D006 CB		D011		D020		D029		D038
	D003 OR		D007		D012		D021		D030		D039
	D003 RC		D008		D013		D022		D031		D040
	D003 RS		D008 LB		D014		D023		D032		D041
	D003 UO		D009 LM-NRR		D015		D024		D033		D042
	D003 WR		D009 LM-RR		D016		D025		D034		D043
					"F" Listed Codes						
	F001		F006		F011		F022		F027		F037
	F002		F007		F012		F023		F028		F038
	F003		F008		F019		F024		F032		F039
	F004		F009		F020		F025		F034		
	F005		F010		F021		F026		F035		
					"K" Listed Codes						
	K001		K022		K043		K086		K109		K144
	K002		K023		K044		K087		K110		K145
	K003		K024		K045		K088		K111		K147
	K004		K025		K046		K093		K112		K148
	K005		K026		K047		K094		K113		K149
	K006 AN		K027		K048		K095		K114		K150
	K006 HY		K028		K049		K096		K115		K151
	K007		K029		K050		K097		K116		K156
	K008		K030		K051		K098		K117		K157
	K009		K031		K052		K099		K118		K158
	K010		K032		K060		K100		K123		K159
	K011		K033		K061		K101		K124		K161
	K013		K034		K062		K102		K125		K169
	K014		K035		K069 CS		K103		K126		K170
	K015		K036		K069 NCS		K104		K131		K171
	K016		K037		K071 RR		K105		K132		K172
	K017		K038		K071 NRR		K106 LM-RR		K136		
	K018		K039		K073		K106 LM-NRR		K140		
	K019		K040		K083		K106 HM		K141		
	K020		K041		K084		K107		K142		
	K021		K042		K085		K108		K143		
					"P" Listed Codes						
	P001		P012		P024		P038		P049		P064
	P002		P013		P026		P039		P050		P065 NIRR
	P003		P014		P027		P040		P051		P065 LM-IR
	P004		P015		P028		P041		P054		P065 LM-RR
	P005		P016		P029		P042		P056		P065 HM- IRR
	P006		P017		P030		P043		P057		P066
	P007		P018		P031		P044		P058		P067
	P008		P020		P033		P045		P059		P068
	P009		P021		P034		P046		P060		P069
	P010		P022		P036		P047		P062		P070
	P011		P023		P037		P048		P063		P071

Note: The Line #'s are from the Notification Form, not the hazardous waste manifest.

LDR ATTACHMENT 1: EPA WASTE CODE LISTING - PAGE 2 MANIFEST NO.: 00001

Line #'s	EPA Code	Line #'s	EPA Code	Line #'s	EPA Code	Line #'s	EPA Code	Line #'s	EPA Code	Line #'s	EPA Code
	P072		P087		P097		P110		P122		P196
	P073		P088		P098		P111		P123		P197
	P074		P089		P099		P112		P127		P198
	P075		P092 NIRR		P101		P113		P128		P199
	P076		P092 LM-IR		P102		P114		P185		P201
	P077		P092 LM-RR		P103		P115		P188		P202
	P078		P092 HM-TRR		P104		P116		P189		P203
	P081		P093		P105		P118		P190		P204
	P082		P094		P106		P119		P191		P205
	P084		P095		P108		P120		P192		
	P085		P096		P109		P121		P194		
					"U" Listed Codes						
	U001		U045		U089		U133		U174		U221
/	U002		U046		U090		U134		U176		U222
	U003		U047		U091		U135		U177		U223
	U004		U048		U092		U136		U178		U225
	U005		U049		U093		U137		U179	/	U226
	U006		U050		U094		U138		U180		U227
	U007		U051		U095		U140		U181	/	U228
	U008		U052		U096		U141		U182		U234
	U009		U053		U097		U142		U183		U235
	U010		U055		U098		U143		U184		U236
	U011		U056		U099		U144		U185		U237
	U012		U057		U101		U145		U186		U238
	U014		U058		U102		U146		U187	/	U239
	U015		U059		U103		U147		U188		U240 (2,4-D)
	U016		U060		U105		U148		U189		U240 (2,4-D Salts)
	U017		U061		U106		U149		U190		U243
	U018		U062		U107		U150		U191		U244
	U019		U063		U108		U151 LM-NRR		U192		U246
	U020		U064		U109		U151 LM-RR		U193		U247
	U021		U066		U110		U151 HM		U194		U248
	U022		U067		U111		U152		U196		U249
	U023		U068		U112		U153		U197		U271
	U024		U069		U113		U154		U200		U278
	U025		U070		U114		U155		U201		U279
	U026		U071		U115		U156		U202		U280
	U027		U072		U116		U157		U203		U328
	U028		U073		U117		U158		U204		U353
	U029		U074		U118	/	U159		U205		U359
	U030		U075		U119		U160		U206		U364
	U031	/	U076		U120		U161		U207		U367
	U032	/	U077		U121		U162		U208		U372
	U033	/	U078		U122		U163		U209		U373
	U034	/	U079		U123		U164	/	U210		U387
	U035		U080		U124	/	U165		U211		U389
	U036		U081		U125		U166		U213		U394
	U037		U082		U126		U167		U214		U395
	U038		U083		U127		U168		U215		U404
	U039		U084		U128		U169		U216		U408
	U041		U085		U129		U170		U217		U409
	U042		U086		U130		U171		U218		U410
/	U043		U087		U131		U172		U219		U411
	U044		U088		U132		U173	/	U220		

Note: The Line #'s are from the Notification Form, not the hazardous waste manifest.

DWALKER.LDR.1.11.17.98

ID:5806973597 PAGE 4/4

Safety-Kleen Inc. Services, Lone Mountain -- 01/22/02

Generator's Analytical Report - Page: 1

For Period Beginning 10/01/01 -- Ending 01/22/02

U CAL CHEMICAL DISTRIBUTION
2100 EAST 37TH STREET NORTH
WICHITA, KS 67219
K 096535026

SAMP#	SWO	MANIFEST#	ARVL DT	POUNDS	DDATE	MANIFEST WT/UM	PROFILENO	HANDLING CODES
* Start of Lines routed to Done ***								
2001005376A	45615	00002	10/30/01	47280	11/01/01	0	LM01-0570	D80
2001005377A	45596	00001	10/30/01	47520	11/01/01	0	LM01-0570	D80
2 1005390A	45597	00003	10/31/01	46060	10/31/01	0	LM01-0570	D80
2001005391A	45600	00005	10/31/01	50580	10/31/01	0	LM01-0570	D80
2001005392A	45738	00004	10/31/01	46300	10/31/01	0	LM01-0570	D80
2 1005393A	45739	00006	10/31/01	50580	10/31/01	0	LM01-0570	D80
2 1005414A	45616	00009	11/01/01	48920	11/01/01	0	LM01-0570	D80
2001005415A	45736	00007	11/01/01	53460	11/01/01	0	LM01-0570	D80
2001005416A	45737	00008	11/01/01	49660	11/01/01	0	LM01-0570	D80
2 1005418A	45599	00010	11/01/01	52160	11/01/01	0	LM01-0570	D80
2001005429A	45601	00012	11/01/01	41780	11/01/01	0	LM01-0570	D80
2001005430A	45602	00011	11/01/01	50280	11/01/01	0	LM01-0570	D80
2 1005432A	45598	00013	11/01/01	41860	11/01/01	0	LM01-0570	D80
2 1005436A	45744	00014	11/01/01	48460	11/01/01	0	LM01-0570	D80
2001005437A	45742	00015	11/01/01	47280	11/01/01	0	LM01-0570	D80
2001005442A	45743	00016	11/01/01	43240	11/01/01	0	LM01-0570	D80
2 1005444A	45741	00018	11/01/01	45620	11/05/01	0	LM01-0570	S02, D80
2001005454A	45603	00017	11/02/01	48560	11/02/01	0	LM01-0570	D80
2001005464A	45779	00019	11/02/01	46680	11/02/01	0	LM01-0570	D80
2 1005468A	45784	00022	11/02/01	22600	11/02/01	0	LM01-0570	D80
2 1005469A	45778	00020	11/02/01	35860	11/02/01	0	LM01-0570	D80
2001005472A	45777	00021	11/02/01	44560	11/02/01	0	LM01-0570	D80
2001005475A	45781	00024	11/02/01	37920	11/02/01	0	LM01-0570	D80
2 1005476A	45782	00025	11/02/01	45380	11/02/01	0	LM01-0570	D80
2001005477A	45783	00026	11/02/01	43000	11/02/01	0	LM01-0570	D80
2001005479A	45776	00023	11/02/01	50560	11/02/01	0	LM01-0570	D80
2 1005481A	45780	00027	11/02/01	44980	11/06/01	0	LM01-0570	S02, D80
2 1005500A	45810	00028	11/05/01	43840	11/05/01	0	LM01-0570	D80
2001005501A	45811	00029	11/05/01	53940	11/05/01	0	LM01-0570	D80
2001005503A	45815	00031	11/05/01	50460	11/05/01	0	LM01-0570	D80
2 1005505A	45809	00030	11/05/01	48520	11/05/01	0	LM01-0570	D80
2001005510A	45838	00032	11/05/01	23200	11/05/01	0	LM01-0570	D80
2001005513A	45812	00034	11/05/01	43200	11/05/01	0	LM01-0570	D80
2 1005514A	45814	00033	11/05/01	44700	11/05/01	0	LM01-0570	D80
2 1005518A	45822	00035	11/06/01	46060	11/06/01	0	LM01-0570	D80
2001005529A	45818	00036	11/06/01	38920	11/06/01	0	LM01-0570	D80
2 1005531A	45817	00037	11/06/01	42360	11/07/01	0	LM01-0570	S02, D80

Safety-Kleen Inc. Services, Lone Mountain -- 01/22/02

Generator's Analytical Report - Page: 1

For Period Beginning 10/01/01 -- Ending 01/22/02

U[illegible]CAL CHEMICAL DISTRIBUTION
2100 EAST 37TH STREET NORTH
WICHITA, KS 67219
K[illegible] 096535026

SAMP#	SWO	MANIFEST#	ARVL DT	POUNDS	DDATE	MANIFEST WT/UM	PROFILENO	HANDLING CODES
2[illegible]1005536A	45820	00038	11/07/01	51500	11/07/01	0	LM01-0570	D80
2001005540A	45819	00039	11/07/01	45840	11/07/01	0	LM01-0570	D80
2001005547A	45816	00043	11/07/01	49320	11/07/01	0	LM01-0570	D80
2[illegible]1005548A	45823	00040	11/07/01	47040	11/07/01	0	LM01-0570	D80
2001005551A	45813	00041	11/07/01	43200	11/07/01	0	LM01-0570	D80
2001005552A	45821	00042	11/07/01	45360	11/07/01	0	LM01-0570	D80
2[illegible]1005560A	45909	00044	11/07/01	51980	11/07/01	0	LM01-0570	D80
2[illegible]1005561A	45908	00045	11/08/01	50740	11/08/01	0	LM01-0570	D80
2001005563A	45907	00054	11/07/01	42120	11/08/01	0	LM01-0570	D80
2001005564A	45824	00046	11/08/01	46000	11/08/01	0	LM01-0570	D80
2[illegible]1005569A	45929	00047	11/08/01	46720	11/08/01	0	LM01-0570	D80
2001005570A	45930	00048	11/08/01	49200	11/08/01	0	LM01-0570	D80
2001005578A	45935	00049	11/08/01	21820	11/08/01	0	LM01-0570	D80
2[illegible]1005579A	45917	00050	11/08/01	54380	11/08/01	0	LM01-0570	D80
2[illegible]1005580A	45918	00052	11/08/01	52360	11/08/01	0	LM01-0570	D80
2001005582A	45919	00051	11/08/01	49700	11/08/01	0	LM01-0570	D80
2001005586A	45962	00053	11/08/01	47520	11/08/01	0	LM01-0570	D80
2[illegible]1005591A	45920	00055	11/08/01	45880	11/08/01	0	LM01-0570	D80
2001005594A	45954	00059	11/09/01	51760	11/09/01	0	LM01-0570	D80
2001005596A	45940	00058	11/09/01	42780	11/09/01	0	LM01-0570	D80
2[illegible]1005599A	45941	00057	11/09/01	52280	11/09/01	0	LM01-0570	D80
2[illegible]1005600A	45921	00056	11/09/01	41220	11/09/01	0	LM01-0570	D80
2001005608A	45967	00060	11/09/01	40800	11/09/01	0	LM01-0570	D80
2001005612A	45966	00061	11/09/01	37960	11/09/01	0	LM01-0570	D80
2[illegible]1005614A	45960	00066	11/09/01	44840	11/09/01	0	LM01-0570	D80
2001005616A	45964	00063	11/09/01	48340	11/09/01	0	LM01-0570	D80
2001005617A	45922	00064	11/09/01	52660	11/09/01	0	LM01-0570	D80
2[illegible]1005618A	45961	00065	11/09/01	46020	11/09/01	0	LM01-0570	D80
2[illegible]1005625A	45963	00067	11/12/01	47040	11/12/01	0	LM01-0570	D80
2001005628A	45982	00068	11/12/01	56460	11/12/01	0	LM01-0570	D80
2[illegible]1005629A	45988	00069	11/12/01	45300	11/12/01	0	LM01-0570	D80
2[illegible]1005631A	45983	00071	11/12/01	49360	11/12/01	0	LM01-0570	D80
2001005632A	45986	00070	11/12/01	52960	11/12/01	0	LM01-0570	D80
2001005633A	45990	00072	11/12/01	46760	11/12/01	0	LM01-0570	D80
2[illegible]1005638A	45985	00073	11/12/01	48120	11/12/01	0	LM01-0570	D80
2[illegible]1005639A	45987	00075	11/12/01	46660	11/12/01	0	LM01-0570	D80
2001005641A	45965	00062	11/12/01	41420	11/12/01	0	LM01-0570	D80
2[illegible]1005642A	45991	00074	11/12/01	47620	11/12/01	0	LM01-0570	D80

Safety-Kleen Inc. Services, Lone Mountain -- 01/22/02
Generator's Analytical Report - Page: 2
For Period Beginning 10/01/01 -- Ending 01/22/02

U CAL CHEMICAL DISTRIBUTION
2100 EAST 37TH STREET NORTH
W HITA, KS 67219
K 096535026

SAMP#	SWO	MANIFEST#	ARVL DT	POUNDS	DDATE	MANIFEST WT/UM	PROFILENO	HANDLING CODES
2 1005643A	45989	00076	11/12/01	46900	11/12/01	0	LM01-0570	D80
2001005650A	46006	00078	11/13/01	45920	11/13/01	0	LM01-0570	D80
2001005651A	46004	00080	11/13/01	48920	11/13/01	0	LM01-0570	D80
2 1005652A	46005	00079	11/13/01	47660	11/13/01	0	LM01-0570	D80
2001005656A	46008	00082	11/13/01	47760	11/13/01	0	LM01-0570	D80
2001005657A	46007	00081	11/13/01	41380	11/13/01	0	LM01-0570	D80
2 1005661A	46002	00083	11/13/01	49100	11/13/01	0	LM01-0570	D80
2 1005662A	46003	00084	11/13/01	47780	11/13/01	0	LM01-0570	D80
2001005667A	46011	00085	11/14/01	53980	11/14/01	0	LM01-0570	D80
2001005669A	46010	00087	11/14/01	45900	11/14/01	0	LM01-0570	D80
2 1005670A	46009	00086	11/14/01	47060	11/14/01	0	LM01-0570	D80
2001005673A	46012	00089	11/14/01	52860	11/14/01	0	LM01-0570	D80
2001005674A	46019	00090	11/14/01	51620	11/14/01	0	LM01-0570	D80
2 1005676A	46021	00091	11/14/01	45420	11/14/01	0	LM01-0570	D80
2 1005677A	46058	00092	11/14/01	48300	11/14/01	0	LM01-0570	D80
2001005682A	46022	00093	11/14/01	49120	11/14/01	0	LM01-0570	D80
2001005683A	46020	00094	11/14/01	48180	11/14/01	0	LM01-0570	D80
2 1005684A	45984	00077	11/14/01	43880	11/14/01	0	LM01-0570	D80
2001005685A	46013	00095	11/14/01	46360	11/14/01	0	LM01-0570	D80
2001005686A	46059	00088	11/14/01	45600	11/14/01	0	LM01-0570	D80
2 1005687A	46017	00096	11/14/01	47040	11/14/01	0	LM01-0570	D80
2 1005690A	46075	00098	11/14/01	52560	11/14/01	0	LM01-0570	D80
2001005692A	46018	00097	11/14/01	45400	11/14/01	0	LM01-0570	D80
2 1005695A	46063	00103	11/15/01	43520	11/15/01	0	LM01-0570	D80
2 1005697A	46060	00101	11/15/01	37880	11/15/01	0	LM01-0570	D80
2001005698A	46062	00102	11/15/01	44740	11/15/01	0	LM01-0570	D80
2001005699A	46024	00100	11/15/01	46160	11/15/01	0	LM01-0570	D80
2 1005701A	46014	00099	11/15/01	50600	11/15/01	0	LM01-0570	D80
2 1005704A	46061	00104	11/15/01	44480	11/15/01	0	LM01-0570	D80
2001005706A	46016	00106	11/15/01	49260	11/15/01	0	LM01-0570	D80
2 1005707A	46031	00105	11/15/01	49300	11/15/01	0	LM01-0570	D80
2 1005708A	46030	00107	11/15/01	53680	11/15/01	0	LM01-0570	D80
2001005710A	46025	00108	11/15/01	43200	11/15/01	0	LM01-0570	D80
2001005711A	46106	00109	11/15/01	49100	11/15/01	0	LM01-0570	D80
2 1005712A	46026	00110	11/15/01	44420	11/15/01	0	LM01-0570	D80
2 1005714A	46033	00111	11/15/01	44860	11/15/01	0	LM01-0570	D80
2001005716A	46027	00112	11/15/01	51060	11/15/01	0	LM01-0570	D80
2 1005717A	46028	00113	11/15/01	46660	11/15/01	0	LM01-0570	D80

Safety-Kleen Inc. Services, Lone Mountain -- 01/22/02

Generator's Analytical Report - Page: 3

For Period Beginning 10/01/01 -- Ending 01/22/02

U CAL CHEMICAL DISTRIBUTION
2100 EAST 37TH STREET NORTH
W HITA, KS 67219
K 096535026

SAMP#	SWO	MANIFEST#	ARVL DT	POUNDS	DDATE	MANIFEST WT/UM	PROFILENO	HANDLING CODES
2 1005719A	46034	00114	11/15/01	47020	11/15/01	0	LM01-0570	D80
2001005720A	46029	00115	11/15/01	50660	11/15/01	0	LM01-0570	D80
2001005721A	46066	00116	11/15/01	40220	11/15/01	0	LM01-0570	D80
2 1005722A	46064	00118	11/15/01	44700	11/15/01	0	LM01-0570	D80
2001005723A	46065	00117	11/15/01	45880	11/15/01	0	LM01-0570	D80
2001005729A	46172	00120	11/16/01	52100	11/16/01	0	LM01-0570	D80
2 1005730A	46171	00121	11/16/01	40000	11/16/01	0	LM01-0570	D80
2 1005731A	46032	00122	11/16/01	46040	11/16/01	0	LM01-0570	D80
2001005732A	46067	00119	11/16/01	37240	11/16/01	0	LM01-0570	D80
2001005735A	46039	00123	11/16/01	49780	11/16/01	0	LM01-0570	D80
2 1005736A	46175	00124	11/16/01	47060	11/16/01	0	LM01-0570	D80
2001005737A	46161	00125	11/16/01	43580	11/16/01	0	LM01-0570	D80
2001005738A	46040	00129	11/16/01	48520	11/16/01	0	LM01-0570	D80
2 1005739A	46160	00126	11/16/01	40560	11/16/01	0	LM01-0570	D80
2 1005740A	46162	00127	11/16/01	42200	11/16/01	0	LM01-0570	D80
2001005741A	46042	00128	11/16/01	47500	11/16/01	0	LM01-0570	D80
2001005742A	46038	00130	11/16/01	47220	11/16/01	0	LM01-0570	D80
2 1005743A	46041	00132	11/16/01	48620	11/16/01	0	LM01-0570	D80
2001005744A	46035	00133	11/16/01	53600	11/16/01	0	LM01-0570	D80
2001005745A	46036	00134	11/16/01	44360	11/16/01	0	LM01-0570	D80
2 1005746A	46037	00135	11/16/01	52920	11/16/01	0	LM01-0570	D80
2 1005747A	46043	00131	11/16/01	46660	11/19/01	0	LM01-0570	D80
2001005748A	46192	00137	11/16/01	48480	11/19/01	0	LM01-0570	D80
2001005749A	46173	00136	11/16/01	49680	11/19/01	0	LM01-0570	D80
2 1005758A	46193	00139	11/19/01	49620	11/19/01	0	LM01-0570	D80
2001005760A	46163	00138	11/19/01	39420	11/19/01	0	LM01-0570	D80
2001005764A	46184	00140	11/19/01	45300	11/19/01	0	LM01-0570	D80
2 1005765A	46183	00141	11/19/01	48600	11/19/01	0	LM01-0570	D80
2 1005766A	46188	00142	11/19/01	44440	11/19/01	0	LM01-0570	D80
2001005767A	46190	00143	11/19/01	47960	11/19/01	0	LM01-0570	D80
2001005768A	46191	00146	11/19/01	47700	11/19/01	0	LM01-0570	D80
2 1005769A	46187	00145	11/19/01	49140	11/19/01	0	LM01-0570	D80
2001005770A	46186	00144	11/19/01	47500	11/19/01	0	LM01-0570	D80
2001005776A	46185	00148	11/20/01	31040	11/20/01	0	LM01-0570	D80
2 1005781A	46205	00147	11/20/01	37560	11/20/01	0	LM01-0570	D80
2 1005786A	46206	00149	11/20/01	40400	11/20/01	0	LM01-0570	D80
2001005787A	46195	00150	11/20/01	42200	11/20/01	0	LM01-0570	D80
2 1005789A	46204	00151	11/20/01	45840	11/20/01	0	LM01-0570	D80

Safety-Kleen Inc. Services, Lone Mountain -- 01/22/02

Generator's Analytical Report - Page: 4

For Period Beginning 10/01/01 -- Ending 01/22/02

U CAL CHEMICAL DISTRIBUTION
2100 EAST 37TH STREET NORTH
WICHITA, KS 67219
K 0096535026

SAMP#	SWO	MANIFEST#	ARVL DT	POUNDS	DDATE	MANIFEST WT/UM	PROFILENO	HANDLING CODES
2 1005790A	46189	00153	11/20/01	49200	11/20/01	0	LM01-0570	D80
2001005791A	46194	00152	11/20/01	46680	11/20/01	0	LM01-0570	D80
2001005792A	46197	00154	11/20/01	45160	11/20/01	0	LM01-0570	D80
2 1005795A	46207	00155	11/20/01	49660	11/20/01	0	LM01-0570	D80
2 1005797A	46208	00156	11/20/01	48820	11/20/01	0	LM01-0570	D80
2001005801A	46232	00158	11/21/01	43640	11/21/01	0	LM01-0570	D80
2 1005804A	46223	00159	11/21/01	50360	11/21/01	0	LM01-0570	D80
2 1005807A	46233	00161	11/21/01	49240	11/21/01	0	LM01-0570	D80
2001005809A	46196	00162	11/21/01	49280	11/21/01	0	LM01-0570	D80
2001005810A	46222	00160	11/21/01	46020	11/21/01	0	LM01-0570	D80
2 1005812A	46221	00157	11/21/01	41940	11/21/01	0	LM01-0570	D80
2 1005814A	46243	00163	11/21/01	40320	11/21/01	0	LM01-0570	D80
2001005815A	46238	00164	11/21/01	44540	11/21/01	0	LM01-0570	D80
2 1005816A	46237	00165	11/21/01	45940	11/21/01	0	LM01-0570	D80
2 1005817A	46236	00166	11/21/01	45600	11/21/01	0	LM01-0570	D80
2001005820A	46240	00167	11/21/01	49940	11/21/01	0	LM01-0570	D80
2001005821A	46239	00168	11/21/01	49640	11/21/01	0	LM01-0570	D80
2 1005822A	46242	00169	11/21/01	51080	11/21/01	0	LM01-0570	D80
2 1005823A	46241	00170	11/21/01	46760	11/21/01	0	LM01-0570	D80
2001005825A	46220	00171	11/26/01	45820	11/26/01	0	LM01-0570	D80
2 1005826A	46234	00172	11/26/01	46160	11/26/01	0	LM01-0570	D80
2 1005830A	46263	00173	11/26/01	50320	11/26/01	0	LM01-0570	D80
2001005831A	46265	00175	11/26/01	47260	11/26/01	0	LM01-0570	D80
2001005832A	46262	00174	11/26/01	45680	11/26/01	0	LM01-0570	D80
2 1005833A	46264	00176	11/26/01	48380	11/26/01	0	LM01-0570	D80
2001005834A	46266	00178	11/26/01	48860	11/26/01	0	LM01-0570	D80
2001005836A	46267	00177	11/26/01	45300	11/26/01	0	LM01-0570	D80
2 1005842A	46261	00179	11/26/01	51660	11/26/01	0	LM01-0570	D80
2 1005844A	46268	00180	11/26/01	46880	11/29/01	0	LM01-0570	D80
2001005845A	46293	00182	11/27/01	48900	11/27/01	0	LM01-0570	D80
2001005853A	46292	00181	11/27/01	49040	11/27/01	0	LM01-0570	D80
2 1005862A	46297	00183	11/27/01	51960	11/27/01	0	LM01-0570	D80
2001005863A	46298	00184	11/27/01	25480	11/27/01	0	LM01-0570	D80
2001005865A	46300	00185	11/27/01	25720	11/27/01	0	LM01-0570	D80
2 1005869A	46295	00187	11/27/01	48440	11/27/01	0	LM01-0570	D80
2 1005870A	46296	00188	11/27/01	49320	11/27/01	0	LM01-0570	D80
2001005875A	46299	00186	11/27/01	29120	11/27/01	0	LM01-0570	D80
2 1005879A	46294	00189	11/28/01	52400	11/28/01	0	LM01-0570	D80

Safety-Kleen Inc. Services, Lone Mountain -- 01/22/02

Generator's Analytical Report - Page: 5

For Period Beginning 10/01/01 -- Ending 01/22/02

U CAL CHEMICAL DISTRIBUTION
2100 EAST 37TH STREET NORTH
W CHITA, KS 67219
K 096535026

SAMP#	SMO	MANIFEST#	ARVL DT	POUNDS	DDATE	MANIFEST WT/UM	PROFILENO	HANDLING CODES
2 1005890A	46312	00190	11/28/01	47280	11/28/01	0	LM01-0570	D80
2001005891A	46308	00197	11/28/01	49260	11/28/01	0	LM01-0570	D80
2001005892A	46311	00191	11/28/01	49900	11/28/01	0	LM01-0570	D80
2 1005893A	46309	00193	11/28/01	48820	11/28/01	0	LM01-0570	D80
2001005895A	46310	00194	11/28/01	50000	11/28/01	0	LM01-0570	D80
2001005908A	46329	00199	11/29/01	44620	11/29/01	0	LM01-0570	D80
2 1005910A	46342	00192	11/29/01	46920	11/29/01	0	LM01-0570	D80
2 1005911A	46330	00195	11/29/01	49360	11/29/01	0	LM01-0570	D80
2001005912A	46331	00196	11/29/01	51060	11/29/01	0	LM01-0570	D80
2001005917A	46343	00198	11/29/01	45220	11/29/01	0	LM01-0570	D80
2 1005949A	46356	00200	11/30/01	49060	11/30/01	0	LM01-0570	D80
2001005950A	46363	00201	11/30/01	50400	11/30/01	0	LM01-0570	D80
2001005952A	46359	00202	11/30/01	50920	11/30/01	0	LM01-0570	D80
2 1005953A	46357	00203	11/30/01	50720	11/30/01	0	LM01-0570	D80
2 1005956A	46358	00205	11/30/01	44440	11/30/01	0	LM01-0570	D80
2001005957A	46360	00206	11/30/01	45320	11/30/01	0	LM01-0570	D80
2001005958A	46362	00204	11/30/01	48760	11/30/01	0	LM01-0570	D80
2 1005966A	46361	00208	11/30/01	49160	12/04/01	0	LM01-0570	D80
2001005969A	46377	00209	12/03/01	48000	12/03/01	0	LM01-0570	D80
2001005970A	46378	00207	12/03/01	46380	12/03/01	0	LM01-0570	D80
2 1005980A	46417	00210	12/03/01	52280	12/03/01	0	LM01-0570	D80
2 1005981A	46418	00211	12/03/01	54640	12/03/01	0	LM01-0570	D80
2001005982A	46419	00212	12/03/01	39840	12/03/01	0	LM01-0570	D80
2001005983A	46420	00213	12/03/01	43200	12/03/01	0	LM01-0570	D80
2 1005998A	46429	00217	12/04/01	51000	12/04/01	0	LM01-0570	D80
2001005999A	46428	00216	12/04/01	42000	12/04/01	0	LM01-0570	D80
2001006005A	46421	00214	12/04/01	44720	12/04/01	0	LM01-0570	D80
2 1006006A	46427	00215	12/04/01	48720	12/04/01	0	LM01-0570	D80
2 1006030A	46425	00219	12/04/01	55280	12/04/01	0	LM01-0570	D80
2001006031A	46422	00218	12/04/01	55960	12/04/01	0	LM01-0570	D80
2001006037A	46423	00221	12/05/01	48760	12/05/01	0	LM01-0570	D80
2 1006038A	46426	00220	12/05/01	57400	12/05/01	0	LM01-0570	D80
2001006062A	46424	00222	12/05/01	55100	12/05/01	0	LM01-0570	D80
2001006063A	46496	00223	12/05/01	56540	12/05/01	0	LM01-0570	D80
2 1006072A	46430	00224	12/05/01	51740	12/05/01	0	LM01-0570	D80
2 1006163A	46517	00225	12/11/01	36580	12/11/01	0	LM01-0570	D80
2001006171A	46519	00226	12/11/01	31000	12/11/01	0	LM01-0570	D80
2 1006181A	46518	00227	12/11/01	33080	12/13/01	0	LM01-0570	S02, D80

Safety-Kleen Inc. Services, Lone Mountain -- 01/22/02

Generator's Analytical Report - Page: 6

For Period Beginning 10/01/01 -- Ending 01/22/02

LOCAL CHEMICAL DISTRIBUTION
2100 EAST 37TH STREET NORTH
WICHITA, KS 67219
KS 0096535026

SAMP#	SWO	MANIFEST#	ARVL DT	POUNDS	DDATE	MANIFEST WT/UM	PROFILENO	HANDLING CODES
2001006352A	46839	00229	12/21/01	32000	12/28/01	0	LM01-0570	S02, D80
2001006353A	46840	00228	12/21/01	26260	12/28/01	0	LM01-0570	D80
2001006367A	46863	00230	12/26/01	10420	12/26/01	0	LM01-0570	D80

Summary

Arrival Wt. (Lbs.):	10617960.00
Arrival Wt. (Tons):	5308.98
Non-Hazardous (Lbs.):	0.00
Hazardous (Lbs.):	0.00
Loads:	230.00

Appendix E

HOUSTON LABORATORY
8880 INTERCHANGE DRIVE
HOUSTON, TX 77054
(713) 660-0901

Client Sample ID Borrow Pit YMCA **Collected:** 11/2/01 3:55:00 **SPL Sample ID:** 01110111-04

Site: **Wichita, KS**

Analyses/Method	Result		Rep.Limit	Dil. Factor	QUAL	Date Analyzed	Analyst	Seq. #
Chloroform	ND		5	1		11/05/01 15:41	NL	895255
Chloromethane	ND		10	1		11/05/01 15:41	NL	895255
Dibromochloromethane	ND		5	1		11/05/01 15:41	NL	895255
Dibromomethane	ND		5	1		11/05/01 15:41	NL	895255
Dichlorodifluoromethane	ND		10	1		11/05/01 15:41	NL	895255
Diisopropyl Ether	ND		10	1		11/05/01 15:41	NL	895255
Ethylbenzene	ND		5	1		11/05/01 15:41	NL	895255
Ethylene oxide	ND		200	1		11/05/01 15:41	NL	895255
Freon-113	ND		10	1		11/05/01 15:41	NL	895255
Hexachlorobutadiene	ND		5	1		11/05/01 15:41	NL	895255
Isopropylbenzene	ND		5	1		11/05/01 15:41	NL	895255
Methyl tert-butyl ether	ND		5	1		11/05/01 15:41	NL	895255
Methylene chloride	ND		5	1		11/05/01 15:41	NL	895255
n-Butylbenzene	ND		5	1		11/05/01 15:41	NL	895255
n-Propylbenzene	ND		5	1		11/05/01 15:41	NL	895255
Naphthalene	ND		5	1		11/05/01 15:41	NL	895255
sec-Butylbenzene	ND		5	1		11/05/01 15:41	NL	895255
Styrene	ND		5	1		11/05/01 15:41	NL	895255
tert-Amyl methyl ether	ND		5	1		11/05/01 15:41	NL	895255
tert-Butylbenzene	ND		5	1		11/05/01 15:41	NL	895255
Tetrachloroethene	ND		5	1		11/05/01 15:41	NL	895255
Toluene	ND		5	1		11/05/01 15:41	NL	895255
trans-1,4-Dichloro-2-Butene	ND		100	1		11/05/01 15:41	NL	895255
Trichloroethene	ND		5	1		11/05/01 15:41	NL	895255
Trichlorofluoromethane	ND		5	1		11/05/01 15:41	NL	895255
Vinyl acetate	ND		10	1		11/05/01 15:41	NL	895255
Vinyl chloride	ND		10	1		11/05/01 15:41	NL	895255
cis-1,2-Dichloroethene	ND		5	1		11/05/01 15:41	NL	895255
cis-1,3-Dichloropropene	ND		5	1		11/05/01 15:41	NL	895255
trans-1,2-Dichloroethene	ND		5	1		11/05/01 15:41	NL	895255
trans-1,3-Dichloropropene	ND		5	1		11/05/01 15:41	NL	895255
Xylenes,Total	ND		5	1		11/05/01 15:41	NL	895255
1,2-Dichloroethene (total)	ND		5	1		11/05/01 15:41	NL	895255
Surr: Toluene-d8	88.0	%	80-140	1		11/05/01 15:41	NL	895255
Surr: 1,2-Dichloroethane-d4	100	%	70-120	1		11/05/01 15:41	NL	895255
Surr: 4-Bromofluorobenzene	102	%	74-130	1		11/05/01 15:41	NL	895255

Qualifiers:

ND/U - Not Detected at the Reporting Limit
B - Analyte detected in the associated Method Blank
* - Surrogate Recovery Outside Advisable QC Limits
J - Estimated Value between MDL and PQL
>MCL - Result Over Maximum Contamination Limit(MCL)
D - Surrogate Recovery Unreportable due to Dilution
MI - Matrix Interference

HOUSTON LABORATORY
8880 INTERCHANGE DRIVE
HOUSTON, TX 77054
(713) 660-0901

Client Sample ID Borrow Pit YMCA **Collected:** 11/2/01 3:55:00 **SPL Sample ID:** 01110111-04

Site: Wichita, KS

Analyses/Method	Result	Rep.Limit	Dil. Factor	QUAL	Date Analyzed	Analyst	Seq. #
VOLATILE ORGANICS BY METHOD 8260B		**MCL**	**SW8260B**		**Units: ug/Kg**		
1,1,1,2-Tetrachloroethane	ND	5	1		11/05/01 15:41	NL	895255
1,1,1-Trichloroethane	ND	5	1		11/05/01 15:41	NL	895255
1,1,2,2-Tetrachloroethane	ND	5	1		11/05/01 15:41	NL	895255
1,1,2-Trichloroethane	ND	5	1		11/05/01 15:41	NL	895255
1,1-Dichloroethane	ND	5	1		11/05/01 15:41	NL	895255
1,1-Dichloroethene	ND	5	1		11/05/01 15:41	NL	895255
1,1-Dichloropropene	ND	5	1		11/05/01 15:41	NL	895255
1,2,3-Trichlorobenzene	ND	5	1		11/05/01 15:41	NL	895255
1,2,3-Trichloropropane	ND	5	1		11/05/01 15:41	NL	895255
1,2,4-Trichlorobenzene	ND	5	1		11/05/01 15:41	NL	895255
1,2,4-Trimethylbenzene	ND	5	1		11/05/01 15:41	NL	895255
1,2-Dibromo-3-chloropropane	ND	5	1		11/05/01 15:41	NL	895255
1,2-Dibromoethane	ND	5	1		11/05/01 15:41	NL	895255
1,2-Dichlorobenzene	ND	5	1		11/05/01 15:41	NL	895255
1,2-Dichloroethane	ND	5	1		11/05/01 15:41	NL	895255
1,2-Dichloropropane	ND	5	1		11/05/01 15:41	NL	895255
1,3,5-Trimethylbenzene	ND	5	1		11/05/01 15:41	NL	895255
1,3-Dichlorobenzene	ND	5	1		11/05/01 15:41	NL	895255
1,3-Dichloropropane	ND	5	1		11/05/01 15:41	NL	895255
1,4-Dichlorobenzene	ND	5	1		11/05/01 15:41	NL	895255
2,2-Dichloropropane	ND	5	1		11/05/01 15:41	NL	895255
2-Butanone	ND	20	1		11/05/01 15:41	NL	895255
2-Chloroethyl vinyl ether	ND	10	1		11/05/01 15:41	NL	895255
2-Chlorotoluene	ND	5	1		11/05/01 15:41	NL	895255
2-Hexanone	ND	10	1		11/05/01 15:41	NL	895255
4-Chlorotoluene	ND	5	1		11/05/01 15:41	NL	895255
4-Isopropyltoluene	ND	5	1		11/05/01 15:41	NL	895255
4-Methyl-2-pentanone	ND	10	1		11/05/01 15:41	NL	895255
Acetone	ND	100	1		11/05/01 15:41	NL	895255
Acrolein	ND	50	1		11/05/01 15:41	NL	895255
Acrylonitrile	ND	50	1		11/05/01 15:41	NL	895255
Benzene	ND	5	1		11/05/01 15:41	NL	895255
Bromobenzene	ND	5	1		11/05/01 15:41	NL	895255
Bromochloromethane	ND	5	1		11/05/01 15:41	NL	895255
Bromodichloromethane	ND	5	1		11/05/01 15:41	NL	895255
Bromoform	ND	5	1		11/05/01 15:41	NL	895255
Carbon disulfide	ND	5	1		11/05/01 15:41	NL	895255
Carbon tetrachloride	ND	5	1		11/05/01 15:41	NL	895255
Chlorobenzene	ND	5	1		11/05/01 15:41	NL	895255
Chloroethane	ND	10	1		11/05/01 15:41	NL	895255

Qualifiers:
ND/U - Not Detected at the Reporting Limit
B - Analyte detected in the associated Method Blank
* - Surrogate Recovery Outside Advisable QC Limits
J - Estimated Value between MDL and PQL
>MCL - Result Over Maximum Contamination Limit(MCL)
D - Surrogate Recovery Unreportable due to Dilution
MI - Matrix Interference

HOUSTON LABORATORY
8880 INTERCHANGE DRIVE
HOUSTON, TX 77054
(713) 660-0901

Client Sample ID Central Sand Borrow Pit **Collected:** 11/5/01 5:00:00 **SPL Sample ID:** 01110169-04

Site: **Wichita, KS**

Analyses/Method	Result		Rep.Limit	Dil. Factor	QUAL	Date Analyzed	Analyst	Seq. #
Chloroethane	ND		10	1		11/06/01 23:32	NL	898333
Chloroform	ND		5	1		11/06/01 23:32	NL	898333
Chloromethane	ND		10	1		11/06/01 23:32	NL	898333
Dibromochloromethane	ND		5	1		11/06/01 23:32	NL	898333
Dibromomethane	ND		5	1		11/06/01 23:32	NL	898333
Dichlorodifluoromethane	ND		10	1		11/06/01 23:32	NL	898333
Diisopropyl Ether	ND		10	1		11/06/01 23:32	NL	898333
Ethylbenzene	ND		5	1		11/06/01 23:32	NL	898333
Ethylene oxide	ND		200	1		11/06/01 23:32	NL	898333
Hexachlorobutadiene	ND		5	1		11/06/01 23:32	NL	898333
Isopropylbenzene	ND		5	1		11/06/01 23:32	NL	898333
Methyl tert-butyl ether	ND		5	1		11/06/01 23:32	NL	898333
Methylene chloride	ND		5	1		11/06/01 23:32	NL	898333
n-Butylbenzene	ND		5	1		11/06/01 23:32	NL	898333
n-Propylbenzene	ND		5	1		11/06/01 23:32	NL	898333
Naphthalene	ND		5	1		11/06/01 23:32	NL	898333
sec-Butylbenzene	ND		5	1		11/06/01 23:32	NL	898333
Styrene	ND		5	1		11/06/01 23:32	NL	898333
tert-Amyl methyl ether	ND		10	1		11/06/01 23:32	NL	898333
tert-Butylbenzene	ND		5	1		11/06/01 23:32	NL	898333
Tetrachloroethene	ND		5	1		11/06/01 23:32	NL	898333
Toluene	ND		5	1		11/06/01 23:32	NL	898333
trans-1,4-Dichloro-2-Butene	ND		100	1		11/06/01 23:32	NL	898333
Trichloroethene	ND		5	1		11/06/01 23:32	NL	898333
Trichlorofluoromethane	ND		5	1		11/06/01 23:32	NL	898333
Vinyl acetate	ND		10	1		11/06/01 23:32	NL	898333
Vinyl chloride	ND		10	1		11/06/01 23:32	NL	898333
cis-1,2-Dichloroethene	ND		5	1		11/06/01 23:32	NL	898333
cis-1,3-Dichloropropene	ND		5	1		11/06/01 23:32	NL	898333
trans-1,2-Dichloroethene	ND		5	1		11/06/01 23:32	NL	898333
trans-1,3-Dichloropropene	ND		5	1		11/06/01 23:32	NL	898333
Xylenes,Total	ND		5	1		11/06/01 23:32	NL	898333
1,2-Dichloroethene (total)	ND		5	1		11/06/01 23:32	NL	898333
Surr: Toluene-d8	84.0	%	80-140	1		11/06/01 23:32	NL	898333
Surr: 1,2-Dichloroethane-d4	88.0	%	70-120	1		11/06/01 23:32	NL	898333
Surr: 4-Bromofluorobenzene	104	%	74-130	1		11/06/01 23:32	NL	898333

Qualifiers:

ND/U - Not Detected at the Reporting Limit
B - Analyte detected in the associated Method Blank
* - Surrogate Recovery Outside Advisable QC Limits
J - Estimated Value between MDL and PQL
>MCL - Result Over Maximum Contamination Limit(MCL)
D - Surrogate Recovery Unreportable due to Dilution
MI - Matrix Interference

HOUSTON LABORATORY
8880 INTERCHANGE DRIVE
HOUSTON, TX 77054
(713) 660-0901

Client Sample ID Central Sand Borrow Pit **Collected:** 11/5/01 5:00:00 **SPL Sample ID:** 01110169-04

Site: **Wichita, KS**

Analyses/Method	Result	Rep.Limit	Dil. Factor	QUAL	Date Analyzed	Analyst	Seq. #
VOLATILE ORGANICS BY METHOD 8260B		**MCL**	**SW8260B**		**Units: ug/Kg**		
1,1,1,2-Tetrachloroethane	ND	5	1		11/06/01 23:32	NL	898333
1,1,1-Trichloroethane	ND	5	1		11/06/01 23:32	NL	898333
1,1,2,2-Tetrachloroethane	ND	5	1		11/06/01 23:32	NL	898333
1,1,2-Trichloroethane	ND	5	1		11/06/01 23:32	NL	898333
1,1-Dichloroethane	ND	5	1		11/06/01 23:32	NL	898333
1,1-Dichloroethene	ND	5	1		11/06/01 23:32	NL	898333
1,1-Dichloropropene	ND	5	1		11/06/01 23:32	NL	898333
1,2,3-Trichlorobenzene	ND	5	1		11/06/01 23:32	NL	898333
1,2,3-Trichloropropane	ND	5	1		11/06/01 23:32	NL	898333
1,2,4-Trichlorobenzene	ND	5	1		11/06/01 23:32	NL	898333
1,2,4-Trimethylbenzene	ND	5	1		11/06/01 23:32	NL	898333
1,2-Dibromo-3-chloropropane	ND	5	1		11/06/01 23:32	NL	898333
1,2-Dibromoethane	ND	5	1		11/06/01 23:32	NL	898333
1,2-Dichlorobenzene	ND	5	1		11/06/01 23:32	NL	898333
1,2-Dichloroethane	ND	5	1		11/06/01 23:32	NL	898333
1,2-Dichloropropane	ND	5	1		11/06/01 23:32	NL	898333
1,3,5-Trimethylbenzene	ND	5	1		11/06/01 23:32	NL	898333
1,3-Dichlorobenzene	ND	5	1		11/06/01 23:32	NL	898333
1,3-Dichloropropane	ND	5	1		11/06/01 23:32	NL	898333
1,4-Dichlorobenzene	ND	5	1		11/06/01 23:32	NL	898333
2,2-Dichloropropane	ND	5	1		11/06/01 23:32	NL	898333
2-Butanone	ND	20	1		11/06/01 23:32	NL	898333
2-Chloroethyl vinyl ether	ND	10	1		11/06/01 23:32	NL	898333
2-Chlorotoluene	ND	5	1		11/06/01 23:32	NL	898333
2-Hexanone	ND	10	1		11/06/01 23:32	NL	898333
4-Chlorotoluene	ND	5	1		11/06/01 23:32	NL	898333
4-Isopropyltoluene	ND	5	1		11/06/01 23:32	NL	898333
4-Methyl-2-pentanone	ND	10	1		11/06/01 23:32	NL	898333
Acetone	ND	100	1		11/06/01 23:32	NL	898333
Acrolein	ND	50	1		11/06/01 23:32	NL	898333
Acrylonitrile	ND	50	1		11/06/01 23:32	NL	898333
Benzene	ND	5	1		11/06/01 23:32	NL	898333
Bromobenzene	ND	5	1		11/06/01 23:32	NL	898333
Bromochloromethane	ND	5	1		11/06/01 23:32	NL	898333
Bromodichloromethane	ND	5	1		11/06/01 23:32	NL	898333
Bromoform	ND	5	1		11/06/01 23:32	NL	898333
Bromomethane	ND	10	1		11/06/01 23:32	NL	898333
Carbon disulfide	ND	5	1		11/06/01 23:32	NL	898333
Carbon tetrachloride	ND	5	1		11/06/01 23:32	NL	898333
Chlorobenzene	ND	5	1		11/06/01 23:32	NL	898333

Qualifiers:

ND/U - Not Detected at the Reporting Limit
B - Analyte detected in the associated Method Blank
* - Surrogate Recovery Outside Advisable QC Limits
J - Estimated Value between MDL and PQL
>MCL - Result Over Maximum Contamination Limit(MCL)
D - Surrogate Recovery Unreportable due to Dilution
MI - Matrix Interference

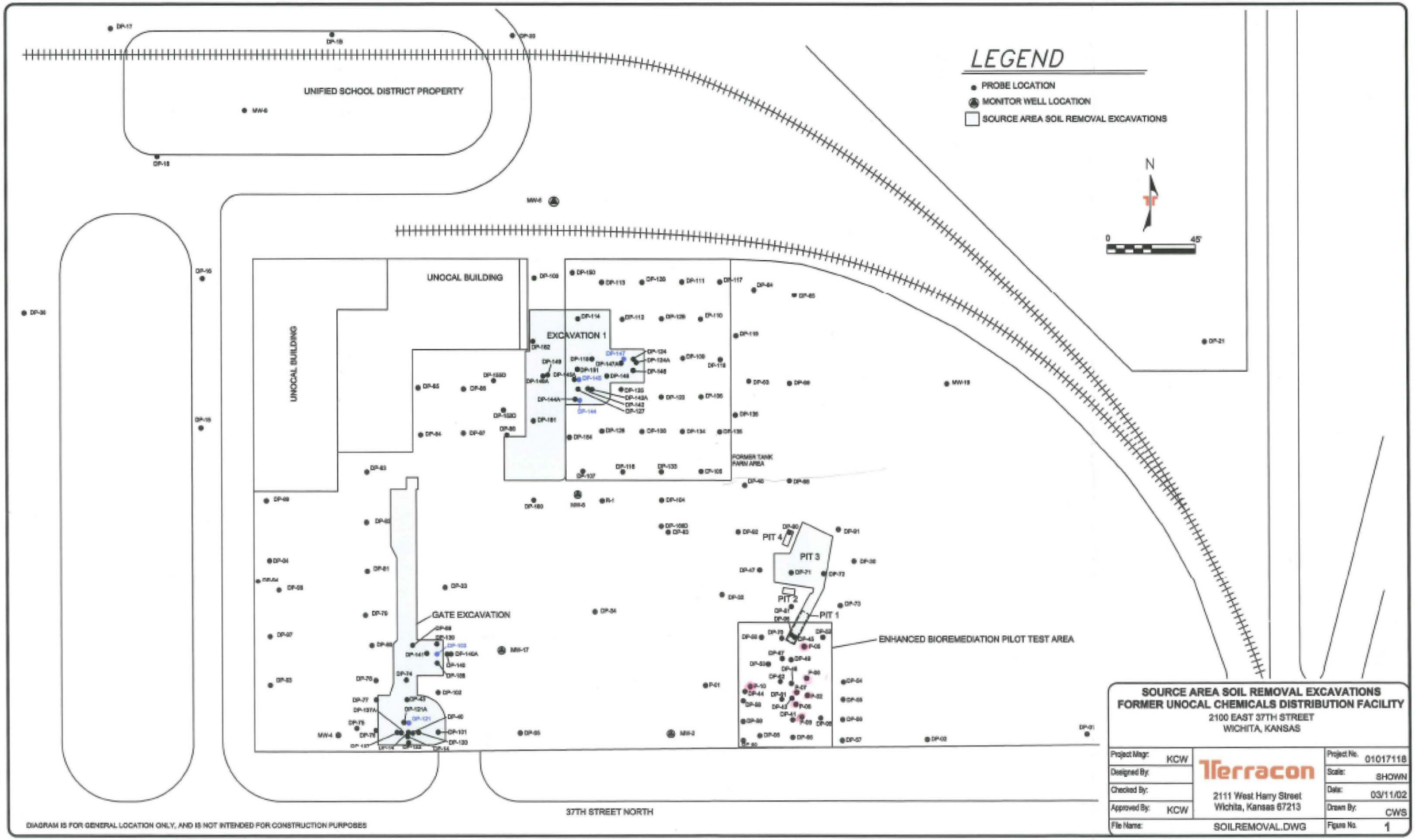

DIAGRAM IS FOR GENERAL LOCATION ONLY, AND IS NOT INTENDED FOR CONSTRUCTION PURPOSES

SOURCE AREA SOIL REMOVAL EXCAVATIONS
FORMER UNOCAL CHEMICALS DISTRIBUTION FACILITY
2100 EAST 37TH STREET
WICHITA, KANSAS

Project Mngr:	KCW	Terracon 2111 West Harry Street Wichita, Kansas 67213	Project No.	01017118
Designed By:			Scale:	SHOWN
Checked By:			Date:	03/11/02
Approved By:	KCW		Drawn By:	CWS
File Name:		SOILREMOVAL.DWG	Figure No.	1