APEX

July 17, 2014

Ms. Pamela Green
Kansas Department of Health and Environment
Bureau of Environmental Remediation
1000 SW Jackson Street, Suite 410
Topeka, Kansas 66612

Re: Soil Investigation Report and Proposed Soil Excavation Work Plan
NuStar Andover Quail Crossing
Andover, Kansas
1641-06

Dear Ms. Green:

Enclosed, please find the Soil Investigation Report and Proposed Soil Excavation Work Plan (Report). This Report was prepared by Apex Companies, LLC (Apex) on behalf of NuStar Pipeline Operating Partnership L.P. (NuStar) in response to a gasoline release from a NuStar refined petroleum pipeline in the Andover Quail Crossing Neighborhood.

If you have any questions or would like to discuss this further, please contact me at (503) 924-4704 ext. 111.

Sincerely,

Sam Jackson
Associate Engineer

ATTACHMENT

Soil Investigation Report and Proposed Soil Excavation Work Plan

cc: Ms. Renee Robinson, NuStar Energy, L.P. (electronic deliverable)

Soil Investigation Report and Proposed Soil Excavation Work Plan Quail Crossing Neighborhood Andover, Kansas

Prepared for:
NuStar Pipeline Operating Partnership L.P.

July 17, 2014
1641-06

APEX

Soil Investigation Report and Proposed Soil Excavation Work Plan Quail Crossing Neighborhood Andover, Kansas

Prepared for:
NuStar Pipeline Operating Partnership L.P.

July 17, 2014
1641-06

Sam Jackson
Associate Engineer

CHRIS BREEMER
LICENSED
817
KANSAS
GEOLOGIST

Chris Breemer, P.G.
Principal Geologist

Table of Contents

1.0 INTRODUCTION 1
1.1 Objectives 2
1.2 Report Organization 2
2.0 SITE DESCRIPTION AND BACKGROUND 2
2.1 Site Description 2
2.2 Subsurface Conditions 3
2.3 Interim Remedial Measures and Comprehensive Investigation Activities 3
3.0 SOIL INVESTIGATION METHODOLOGY AND RESULTS 5
3.1 Soil Investigation Methodology 6
3.2 Soil Results 7
4.0 PROPOSED SOIL EXCAVATION 8
4.1 Objectives and Approach 8
4.2 Procedures 9
5.0 SCHEDULE 10
6.0 REFERENCES 11

Tables

1 Soil Analytical Data – July 2012
2 Soil Analytical Data – July through September 2013
3 Soil Analytical Data – April 2014

Figures

1 Site Location Map
2 Site Vicinity Plan and Sampling Location Map
3 Boring Cross-Section Locations
4 Vadose-Zone Soil Analytical Results – Surface to 7 Feet Below Ground Surface
5 Vadose-Zone Soil Analytical Results – 7 to 18 Feet Below Ground Surface
6 Soil Analytical Results –18 to 24 Feet Below Ground Surface
7 Proposed Soil Excavation Area
8 Cross Sections A – A1, B – B1, and C – C1

Appendices

A Field Notes and Well Logs

B Analytical Laboratory Reports and QA/QC Review

1.0 Introduction

This Soil Investigation Report and Proposed Soil Excavation Work Plan (Report) was prepared by Apex Companies, LLC (Apex) on behalf of NuStar Pipeline Operating Partnership L.P. (NuStar) in response to a gasoline release from a NuStar refined petroleum pipeline. The pipeline release was discovered after separate-phase hydrocarbons (SPH) were detected in an irrigation well at 2006 N Colt Court, in the Quail Crossing Neighborhood (the Neighborhood) of Andover, Kansas (the Site; Figure 1). The NuStar pipeline is located less than 50 feet from the affected irrigation well, and the release location is approximately 80 feet north of the affected irrigation well.

Upon notification of the discovery of SPH in the irrigation well, NuStar immediately mobilized to the Site and implemented several initial response and abatement activities, including pipeline repair and removal of soil containing petroleum constituents adjacent to the pipeline release location. Following the initial response activities, NuStar performed a number of interim remedial measures (IRMs) and implemented a Comprehensive Investigation (CI) in coordination with the Kansas Department of Health and Environment (KDHE) and the Neighborhood. These activities were performed in accordance with the Consent Agreement and Final Order (CAFO), dated May 10, 2013, and are described in the *Comprehensive Investigation Report* (Apex, 2014). Quarterly groundwater monitoring and weekly vacuum/SPH extraction events are ongoing at the Site.

On July 5 and 6, 2012, NuStar excavated approximately 16 cubic yards of soil containing petroleum constituents from the pipeline release area and replaced the affected portion of the pipeline. NuStar performed a soil vacuum extraction (SVE) pilot test during the week of December 9, 2013 to evaluate the feasibility of SVE technology to address the residual gasoline in vadose-zone soil. This pilot test was performed in accordance with the KDHE-approved *Soil Vapor Extraction Pilot Test Work Plan* (Apex, 2013c). The methods and results of the pilot test, and an evaluation of the results were presented in the *SVE Evaluation and Proposed Soil Investigation Report* (Apex, 2014a).

A preliminary evaluation of the SVE pilot test results indicated that SVE may be an effective remedial technology to remove petroleum constituents from soil in the vicinity of the release location. Accordingly, NuStar presented the preliminary results of the SVE pilot test and a conceptual SVE system design at a KDHE-organized Neighborhood meeting on February 17, 2014. In the week after the meeting, the Neighborhood evaluated the proposal and stated that they would not approve of the construction and operation of an SVE system in the Neighborhood. Neighborhood representatives cited a number of reasons for not accepting an SVE system.

NuStar evaluated other remedial alternatives that are effective for removing hydrocarbon mass from the subsurface. In consideration of Neighborhood concerns, additional soil excavation was identified as the most viable option; accordingly, the investigation outlined herein was performed to define the extent of

proposed soil excavation. NuStar proposed the soil investigation as detailed in the *SVE Evaluation and Proposed Soil Investigation Report* (Apex, 2014a). KDHE approved of the scope of work for the soil investigation on April 3, 2014. The soil investigation was performed during the week of April 7, 2014, and the results are presented herein.

1.1 Objectives

The objectives of this Report are to: (1) document the results of the April 2014 soil investigation; and (2) based on an evaluation of those results, define the extent, scope, and methods for proposed excavation of soil.

1.2 Report Organization

This report is organized as follows:

- Background and Site Description – describes the Site characteristics and findings of the CI and describes the IRMs that have been implemented at the Site.
- Soil Investigation Results – presents the methods and results of the soil investigation and identification of the proposed soil excavation area. The soil investigation included advancement, screening, and collection of soil samples from 12 borings to depths of up to 24 feet below ground surface (bgs).
- Proposed Soil Excavation – describes proposed excavation activities to remove vadose-zone soil at the pipeline release area that contains gasoline constituents.

2.0 Site Description and Background

This section contains a general Site description and a summary of environmental work previously performed at the Site.

2.1 Site Description

The Site is located in the northern portion of the City of Andover, in southwest Butler County, Kansas (Figure 1). As shown on Figure 2, land use at the Site and surrounding areas is residential.

The NuStar pipeline is constructed of 8-inch-diameter carbon steel and is used to transport liquefied petroleum products. The pipeline was installed to an approximate depth of three feet bgs in agricultural land in 1959. The pipeline remained in agricultural and/or undeveloped land until the late 1990s when development of the Quail Crossing Neighborhood began.

As part of the Neighborhood development, the pipeline depth was increased to approximately seven feet bgs (pipe invert depth) by re-excavating and backfilling with native material. An approximately 100-foot-wide pipeline right of way (ROW) was created along the pipeline pathway for safety purposes. The ROW limits development activities near the pipeline. The pipeline location and associated ROW are shown on Figure 2.

The Neighborhood is located on 21st Street between 159th Street and Andover Road in the City of Andover, and encompasses approximately a one-quarter- by one-half-mile area. The Neighborhood is currently zoned for residential use (R-2) by Butler County. Approximately 165 homes are present in the Neighborhood. Utilities in the Neighborhood (power, natural gas, water, and sewer) are underground. The general location of underground utilities in the vicinity of the pipeline release is shown on Figure 2.

The gasoline release from the NuStar pipeline was discovered on June 8, 2012, following the detection of SPH in an irrigation well on the property at 2006 N Colt Court. Upon notification of the discovery of SPH in the irrigation well, NuStar immediately mobilized to the Site and implemented several initial response and abatement activities, including: (1) inspecting and testing of the pipeline; (2) hydrotesting of the affected portion of the pipeline; (3) excavation and removal of soil containing gasoline constituents along a 45-foot section of pipeline; (4) replacement of a portion of the pipeline; (5) collection and analysis of water samples from the irrigation well at 2006 N Colt Court; (6) field screening of nearby irrigation wells; (7) vacuum and manual removal of SPH and water from the irrigation well at 2006 N Colt Court; and (8) deactivation of the irrigation well at 2006 N Colt Court and irrigation wells at other properties, and connection of the associated irrigation systems to the municipal water supply. These activities were discussed in the *Initial Response Summary Report* (Apex, 2012a) and in the *Comprehensive Investigation Report* (Apex, 2014).

2.2 Subsurface Conditions

Unconsolidated soil consists of yellowish brown clay (loess) that is generally encountered from the surface to depths ranging from approximately 10 to 15 feet bgs. The clay is underlain by gray, yellow, and olive brown shale of the Wellington Formation. The Wellington Formation is weathered at the interface between consolidated and unconsolidated sediments. Groundwater occurs primarily in the weathered bedrock, and in the vicinity of the release, the depth to groundwater fluctuates from 18 to 32 feet bgs.

2.3 Interim Remedial Measures and Comprehensive Investigation Activities

Following the initial response activities, NuStar planned and implemented the CI and performed a number of IRMs in coordination with KDHE and the Quail Crossing Neighborhood Association. Completed IRMs and CI activities include: (1) excavation of soil containing gasoline constituents along a 45-foot section of pipeline and replacement of the affected portion of the pipeline; (2) installation of 16 monitoring wells; (3) weekly gauging of monitoring wells and SPH removal from the affected irrigation well at 2006 N Colt Court; (4) performance of quarterly comprehensive groundwater monitoring events and associated reporting; (5)

performance of an SVE pilot test and development of a conceptual SVE system design; and (6) preparation of a work plan to perform the soil investigation outlined herein (Apex, 2014a). These activities are described below.

2.3.1 Initial Response Activities

On July 5 and 6, 2012, NuStar excavated approximately 16 cubic yards of soil containing petroleum constituent concentrations from the pipeline release area and replaced the affected portion of the pipeline. KDHE personnel observed these activities. Three soil samples were collected from the south and north sidewalls and the floor of the excavation, at depths of 6 and 13 feet bgs, respectively. As shown on Table 1, the soil samples collected from the north sidewall and the base of the excavation contained concentrations of gasoline-range organics (GRO), benzene, and/or toluene above the corresponding KDHE Tier 2 risk based screening values (RBSVs) for the soil to groundwater pathway.

2.3.2 July through September 2013 CI Activities

The CI was performed following the initial response activities. Activities completed during the CI included: (1) the advancement of 24 soil borings; (2) collection and analysis of soil samples from 16 soil borings; (3) installation of 16 groundwater monitoring wells, three soil vapor monitoring points, and four SVE test wells; (4) collection and analysis of water samples from the 16 monitoring wells and 13 irrigation wells during one monitoring event and 16 irrigation wells during a second monitoring event; and (5) collection and analysis of vapor samples from the soil vapor monitoring points. The results of the CI were presented in the *Comprehensive Investigation Report* (Apex, 2014).

2.3.3 Weekly Gauging and SPH Removal Activities

Ongoing IRMs include vacuum extraction of SPH and water from the irrigation well at 2006 N Colt Court and weekly gauging of groundwater levels in monitoring wells. Since weekly SPH gauging activities were initiated in June 2013, the SPH thickness in the irrigation well at 2006 N Colt Court has decreased significantly. The ongoing IRM data are presented in groundwater monitoring reports that are submitted quarterly to KDHE (Apex, 2014b).

In the vicinity of the release location, depth to groundwater has ranged from approximately 18 to 32 feet bgs, and vadose-zone soil is present from the ground surface to approximately 18 feet bgs.

2.3.4 Quarterly Comprehensive Groundwater Monitoring Events

Comprehensive groundwater monitoring events are performed quarterly and associated reports are submitted to KDHE (Apex, 2014b). The comprehensive groundwater monitoring events include: gauging 16 monitoring wells; collection of groundwater samples from the 16 monitoring wells and from approximately

15 Neighborhood irrigation wells; and submittal of samples to a Kansas-accredited analytical laboratory for gasoline-range organics (GRO) by Method IOWA OA-1 and volatile organic compounds (VOCs) by U.S. Environmental Protection Agency (EPA) Method 8260B.

Analytical results from the most recent comprehensive quarterly groundwater monitoring event conducted in April 2014, indicate that the dissolved-phase hydrocarbon concentrations in groundwater have decreased in magnitude and extent since July/August 2013 (Apex, 2014c).

2.3.5 SVE Pilot Test and Preliminary Design

NuStar performed an SVE pilot test on December 9 and 10, 2013 to evaluate the feasibility of SVE technology for remediating gasoline constituents in the subsurface. This pilot test was performed in accordance with the KDHE-approved *Soil Vapor Extraction Pilot Test Work Plan* (Apex, 2013c). The pilot test results, which were presented in the *SVE Evaluation and Proposed Soil Investigation Report* (Apex, 2014a), indicated that SVE may be an effective remedial technology to remove gasoline constituents from the subsurface.

NuStar presented the preliminary results of the SVE pilot test and a conceptual SVE system design to the Neighborhood in a meeting on February 17, 2014, which included design enhancements such as noise mitigation, location of infrastructure, and aesthetic elements. Neighborhood representatives indicated that they would not approve of the construction and operation of an SVE system.

2.3.6 Soil Investigation Work Plan

Given the Neighborhood concerns, soil excavation was identified as the most viable remedial alternative for vadose-zone soil; accordingly, NuStar submitted the *SVE Evaluation and Proposed Soil Investigation Report* (Apex, 2014a) to define the extent petroleum constituents in vadose-zone soil. KDHE approved the work plan on April 3, 2014. The purpose of the proposed soil investigation was to collect sufficient data to define the extent of excavation needed to remove the majority of petroleum hydrocarbon containing soil in the vadose zone. The results of the investigation are presented in the following section.

3.0 Soil Investigation Methodology and Results

Excavation of vadose-zone soil containing petroleum constituents is being considered to remove petroleum mass as an alternative to SVE; the investigation objective was to define the extent of the excavation. Based on the depth to groundwater gauging data collected at the Site, the vadose zone occurs above a depth of 18 feet bgs. The NuStar pipeline is located at seven feet bgs and there is minimal soil containing petroleum constituents shallower than seven feet bgs. Therefore, the majority of residual hydrocarbon constituents in the vadose zone are present between 7 and 18 feet bgs.

The following sections detail the soil investigation methodology and results in the interval from seven feet bgs to 18 feet bgs. Soil samples were collected above and below that interval to refine our understanding of petroleum constituents in the subsurface.

3.1 Soil Investigation Methodology

The soil investigation was implemented in general accordance with the *SVE Evaluation and Proposed Soil Investigation Report. (*Apex, 2014a). The investigation was focused on the pipeline release location because data collected during the CI indicated that the majority of residual petroleum constituents in the vadose soil are in this area. The data obtained during the investigation were evaluated and used to develop the soil excavation work plan, which is presented in Section 4.

3.1.1 Soil Boring Locations

As shown on Figure 3, 12 soil borings (B-2 through B-13) were advanced in the vicinity of the pipeline release location (within approximately 25 feet of the NuStar pipeline). Boring locations were selected based on CI results to define the extent of soil to be excavated to remove the majority of petroleum mass in vadose-zone soil in the release area. The borings were advanced to 20 feet bgs (one boring was advanced to 25 feet bgs) to define the magnitude and extent of petroleum constituents above and below the water table. Petroleum constituents in soil and rock below the water table will be addressed via groundwater remedial action.

3.1.2 Drilling and Field Screening

Borings were advanced using a hollow stem auger (HSA) drill rig. Continuous soil samples were collected for lithologic description, using a 2-inch diameter, 18-inch long split spoon sampler. Soil cores were extracted and soil lithology was logged in general accordance with ASTM 2487/2488. Soil samples were field screened at 2.5-foot intervals for VOCs and SPH using a photoionization detector (PID) and sheen tests. The field sheets and boring logs are included in Appendix A. The location of each boring was recorded using a handheld global positioning system (GPS) instrument.

3.1.3 Soil Sampling and Analysis

A total of 42 soil samples were selected for laboratory analysis. Samples selected at or below a depth of seven feet bgs were based on field screening indications of petroleum constituents in soil samples. In addition, samples were collected from the overlying soil to confirm the absence of petroleum constituents above the bottom depth of the pipeline (*i.e.*, above the release depth of approximately seven feet bgs). Samples selected for laboratory analysis were collected in accordance with EPA Method 5035, and were submitted to a Kansas-accredited laboratory for analysis of gasoline-range organics (GRO) by Iowa Method OA-1 and benzene, toluene, ethylbenzene, and xylenes (BTEX), 2-butanone, n-butylbenzene, naphthalene,

n-propylbenzene, 1,2,4-trimethylbenzene, 1,3,5-trimethylbenzene, cyclohexane, isopropylbenzene, and methylcyclohexane by EPA Method 8260B.

3.1.4 Investigation-Derived Waste

Investigation-derived waste (IDW) consisted of soil from the soil cores, decontamination water, and personal protection equipment (PPE). Soil and water IDW were containerized, labeled with the project name, general contents, and date. The IDW was profiled and transported to the El Dorado Landfarm for management in accordance with the existing permit (KDHE, 2012). PPE was properly disposed as unregulated solid waste.

3.2 Soil Results

Table 1 includes data obtained from samples during initial response activities, Table 2 includes data obtained from samples collected during the CI activities, and Table 3 shows data obtained from samples collected during the April 2014 soil investigation. As shown in Table 3, soil samples were collected for chemical analysis from borings B-2 through B-13. Analytical results for soil samples collected from the ground surface to seven feet bgs are shown on Figure 4; from 7 to 18 feet bgs are shown on Figure 5; and from 18 to 24 feet bgs are shown on Figure 6. Analytical laboratory reports are included in Appendix B.

With the exception of soil directly adjacent to the former excavation area, the analytical data demonstrate that soil from the ground surface to seven feet bgs does not contain soil with constituent concentrations above KDHE Tier 2 RBSVs (Figure 4). This is consistent with the release occurring from the base of the pipeline, which is located at a depth of 6 feet below grade.

As shown on Figure 5, soil samples collected from locations B-2, B-3, B-4, B-5, B-6, B-7, B-10, and B-12 contained petroleum constituents above KDHE Tier 2 RBSVs in the 7 to 18 foot depth interval. Samples collected from locations B-1, B-8, B-9, B-11, B-13, MW-1, MW-4, and MW-5 at this depth interval did not exhibit petroleum constituent concentrations above KDHE Tier 2 RBSVs; therefore, these borings define the extent of petroleum constituents in vadose-zone soil. As detailed in Section 4.0, these soils are proposed for excavation to remove the majority of hydrocarbon mass from the vadose zone.

Below the water table (i.e., below 18 feet bgs in the vicinity of the pipeline release), samples collected from locations B-1, B-2, B-3, B-6, B-7, B-8, and B-11 contained petroleum constituents or related constituent concentrations above KDHE Tier 2 RBSVs. As can be seen in Figure 6, the estimated extent of petroleum constituents below the water table is larger than observed in the vadose zone, which is attributable to the migration of those constituents via groundwater. Petroleum constituents below the water table will be addressed via groundwater remedial action.

4.0 Proposed Soil Excavation

As discussed in Section 3.2, the data collected during the CI and soil investigation defined the extent of vadose-zone soil containing gasoline-range constituents and associated constituents (BTEX, 1,2-dichloroethane, naphthalene, 1,2,4-trimethylbenzene, 1,3,5-trimethylbenzene, n-butylbenzene, and n-propylbenzene) above KDHE Tier 2 RBSVs. Removal of these soils to the extent practicable will remove the majority of the petroleum constituents in the vadose zone (e.g., above 18 feet bgs). Therefore, to reduce the overall Site remediation time frame, NuStar proposes an IRM consisting of excavation of accessible vadose-zone soil defined by the extent shown on Figure 5. Approximately 450 cubic yards of material will be excavated; and approximately 200 yards of material will contain petroleum constituents.

The proposed conceptual excavation plan is presented in this section; upon approval of this conceptual plan, a detailed Excavation Plan, with methods and procedures, will be submitted to KDHE. The Excavation Plan will include:

- Proposed excavation area drawings;
- Excavation methods and equipment;
- Asphalt concrete cutting and removal plan;
- Soil management;
- Traffic control;
- Backfilling and compaction testing; and
- Procedures for road and curb repair.

The following sections describe the objectives and approach, and summarize the general procedures for the proposed IRM.

4.1 Objectives and Approach

The proposed IRM of soil excavation is intended to remove the majority of the remaining hydrocarbon mass in the vadose zone. Figure 7 shows the lateral extent of the proposed excavation, based on the extent defined from the soil sampling results discussed in Section 3. All proposed excavation will occur within the 100-foot pipeline easement. The excavation will occur in areas greater than five feet from the pipeline, as the soil in that area was already removed down to the base of the pipeline during the initial response actions. This will also allow for adequate protection of the pipeline during the excavation.

Figure 8 shows cross-sections through the proposed excavation area and identifies the anticipated vertical extent of the excavation. As identified in the figure, the soil beneath the pipeline is not accessible without unacceptable risk of damage to the pipeline and will not be excavated. Excavation will be advanced to 18

feet, which is the bottom depth of the vadose zone in the release area, to the extent practicable using standard excavation techniques. As discussed in Section 2, the upper 10 to 13 feet of soil is unconsolidated clay which will be amenable to excavation. Bedrock is typically encountered below 10 to 13 feet; however, the bedrock is typically friable at the clay/bedrock interface. Figure 8 identifies the anticipated depth to bedrock in the excavation area. The bedrock becomes progressively more indurated below this depth and it is possible that in some areas of the excavation soil will become too consolidated to achieve the full depth of excavation to 18 feet. The excavation will be terminated at the depth where standard excavation equipment encounters practical refusal.

4.2 Procedures

4.2.1 Preparatory Activities

Preparatory activities will include the preparation of a Health and Safety Plan (HASP), procurement of subcontractors, finalization of amendments to access agreements and excavation permit, and the marking of underground utilities. The soil excavation area location is under W. Mountain, which is a collector street for the Neighborhood. Soil excavation activities will require temporary closure of traffic lanes. A traffic control plan will be prepared and included in the Excavation Plan, and the excavation will be staged to minimize Neighborhood traffic disruptions.

The excavation area is near private property and utilities. Prior to performing the excavation, NuStar will submit a Kansas One-Call utility locate and retain the services of a private utility locator to identify potential utility conflicts.

4.2.2 Methodology

An excavator will be used to remove soil to the lateral extent shown on Figure 7. Soil excavation activities will include asphalt cutting, removal of the asphalt, excavation of overburden soil (i.e. upper seven feet) and removal of vadose-zone soil with standard excavation equipment. It is anticipated that approximately 450 cubic yards of material will be excavated.

Excavated soil will be stored in drop boxes on the Site, labeled with the project name, general contents, and date. The soil will be profiled and, pending KDHE approval, transported to the El Dorado Landfarm for management.

The excavation will be backfilled with controlled-density fill and compaction testing will be performed in accordance with City requirements. In-kind surface restoration will be performed for the surface completions (pavement, curbing, grass) in accordance with City and Neighborhood requirements. Asphalt

will be replaced in the area removed to complete the excavation and within the footprint of the 2012 excavation, which is shown on Figure 2.

Investigation-derived waste (IDW) will consist of excavated soil, decontamination water and PPE. The excavated soil will be stored in drop boxes on the Site pending receipt of analytical data; a small volume of decontamination water is anticipated and will be stored with the excavated soil. PPE will be disposed of as unregulated solid waste.

5.0 Schedule

The scope of work described herein will be initiated within 90 days of KDHE's approval of the Work Plan, barring delays beyond the control of NuStar. An amended access agreement and excavation permit are required to perform the excavation outlined herein; we anticipate finalization of those documents within 30 days of KDHE's approval of the Work Plan. It is estimated that the field activities will take approximately two weeks, including restoration. The results of the excavation will be presented and discussed in a report to be submitted within 60 days following receipt of the analytical data. The report will document the scope, methods and results of the activities proposed herein.

6.0 References

Aber, J.S., 1991. *Surficial Geology of Butler County, Kansas, Final Report.* Earth Science Department, Emporia State University, KGS Open-File Report 1991-48. April 26, 1991.

Apex, 2012a. *Initial Response Report, Separate –Phase Hydrocarbons in Irrigation Well, 2006 Colt Court, Quail Crossing Neighborhood, Andover, Kansas.* July 9, 2012.

Apex, 2012b. *Groundwater Investigation Work Plan. Quail Crossing Neighborhood, Andover, Kansas.* September 9, 2012.

Apex, 2013a. *Revised Groundwater Investigation Work Plan. Quail Crossing Neighborhood, Andover, Kansas.* July 2, 2013.

Apex, 2013b. *Addendum to the Revised Groundwater Investigation Work Plan NuStar Pipeline Release Site, Quail Crossing Neighborhood.* September 20, 2013.

Apex, 2013c. *Soil Vapor Extraction Pilot Test Work Plan. Quail Crossing Neighborhood, Andover, Kansas*. November 15, 2013.

Apex, 2014. *Comprehensive Investigation Report. Quail Crossing Neighborhood, Andover, Kansas.* February 4, 2014.

Apex, 2014a. *SVE Evaluation and Proposed Soil Investigation Report. Quail Crossing Neighborhood, Andover, Kansas.* March 28, 2014.

Apex, 2014b. *First Quarter 2014 Groundwater Monitoring Report. Quail Crossing Neighborhood, Andover, Kansas.* May 2, 2014.

Apex, 2014c. *Second Quarter 2014 Groundwater Monitoring Report. Quail Crossing Neighborhood, Andover, Kansas.* July 9, 2014.

O'Connor, Howard G., Chaffee, Pamela, and Link, Martha, 1982. *Geohydrology of Southwestern Butler County, Kansas: A Preliminary Report.* Kansas Geological Survey Open File Report 82-2. May 1982.

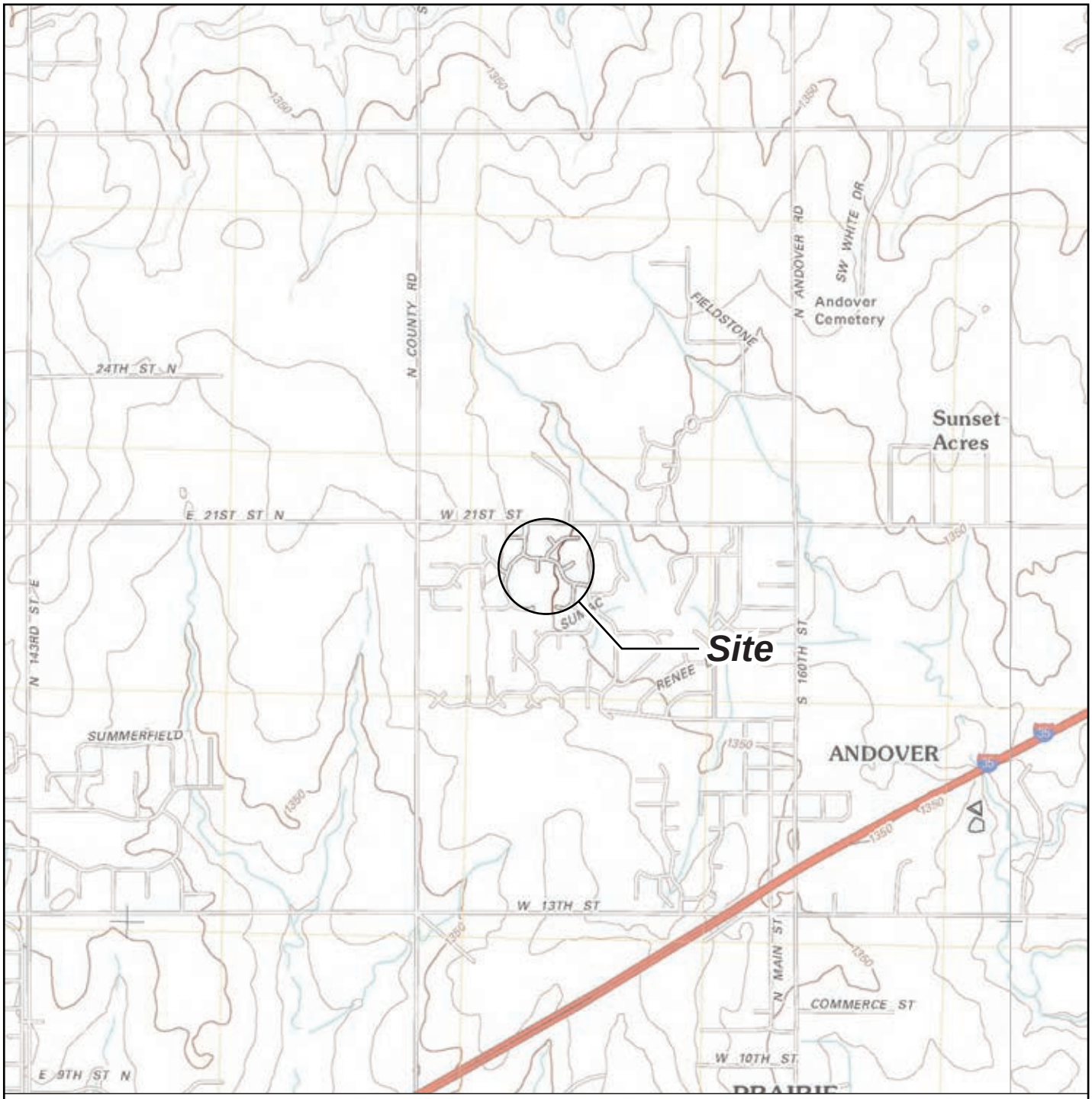

Note: Base map prepared from USGS 7.5-minute quadrangles of Andover and Santa Fe Lake, KS, dated 2009 as provided by USGS.gov.

0 2,000 4,000

Approximate Scale in Feet

KANSAS

N

Site Location Map

Soil Investigation Report and Excavation Work Plan
NuStar Pipeline Operating Partnership L.P.
Andover, Kansas

APEX Apex Companies, LLC 3015 SW First Avenue Portland, Oregon 97201	Project Number	1641-06	Figure
	July 2014		1

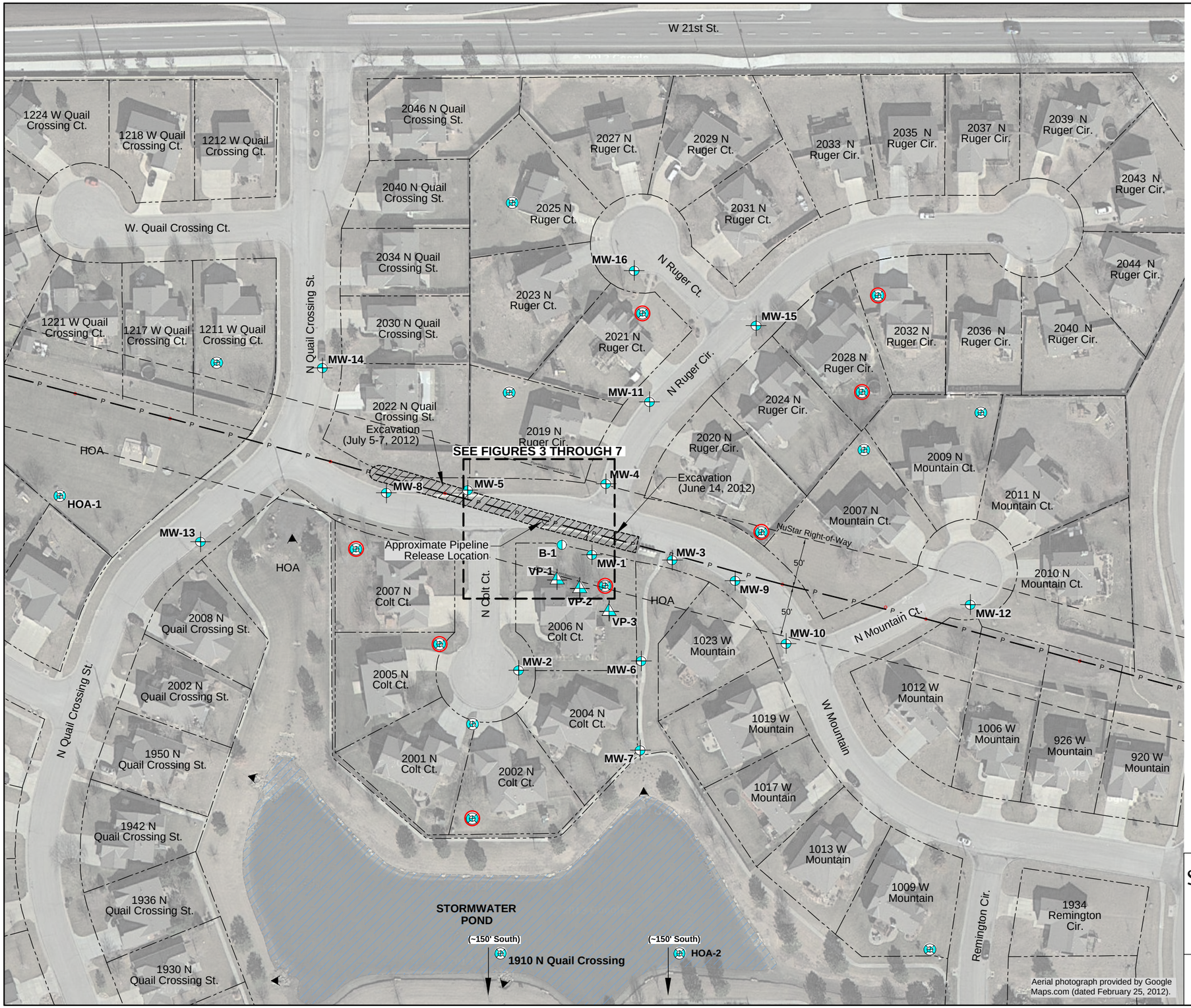

N

Legend:

MW-1	Monitoring Well Location
	Irrigation Well
VP-1	Soil Vapor Monitoring Point
B-1	Boring Location
	Property Line
	Pipeline
	Pipeline Easement Boundary
HOA	Lot Owned by Quail Crossing Homeowner's Association
	Deactivated Irrigation Well
	Excavation Area

0 100 200

Scale in Feet

Site Vicinity Plan and Sampling Location Map

Soil Investigation Report and Excavation Work Plan
NuStar Pipeline Operating Partnership L.P.
Andover, Kansas

APEX

Apex Companies, LLC
3015 SW First Avenue
Portland, Oregon 97201

Project Number	1641-06	Figure
July 2014		2

Legend:

- **MW-1** — Monitoring Well Location
- Irrigation Well
- **B-1** — Boring Location
- Property Line
- Pipeline
- Pipeline Easement Boundary
- Approximate Gas Line
- Approximate Water Line
- **A** **A'** — Cross-Section Location (See Figure 8)

0 20 40

Scale in Feet

Boring and Cross-Section Locations

Soil Investigation Report and Excavation Work Plan
NuStar Pipeline Operating Partnership L.P.
Andover, Kansas

APEX — Apex Companies, LLC, 3015 SW First Avenue, Portland, Oregon 97201	Project Number	1641-06	Figure
	July 2014		3

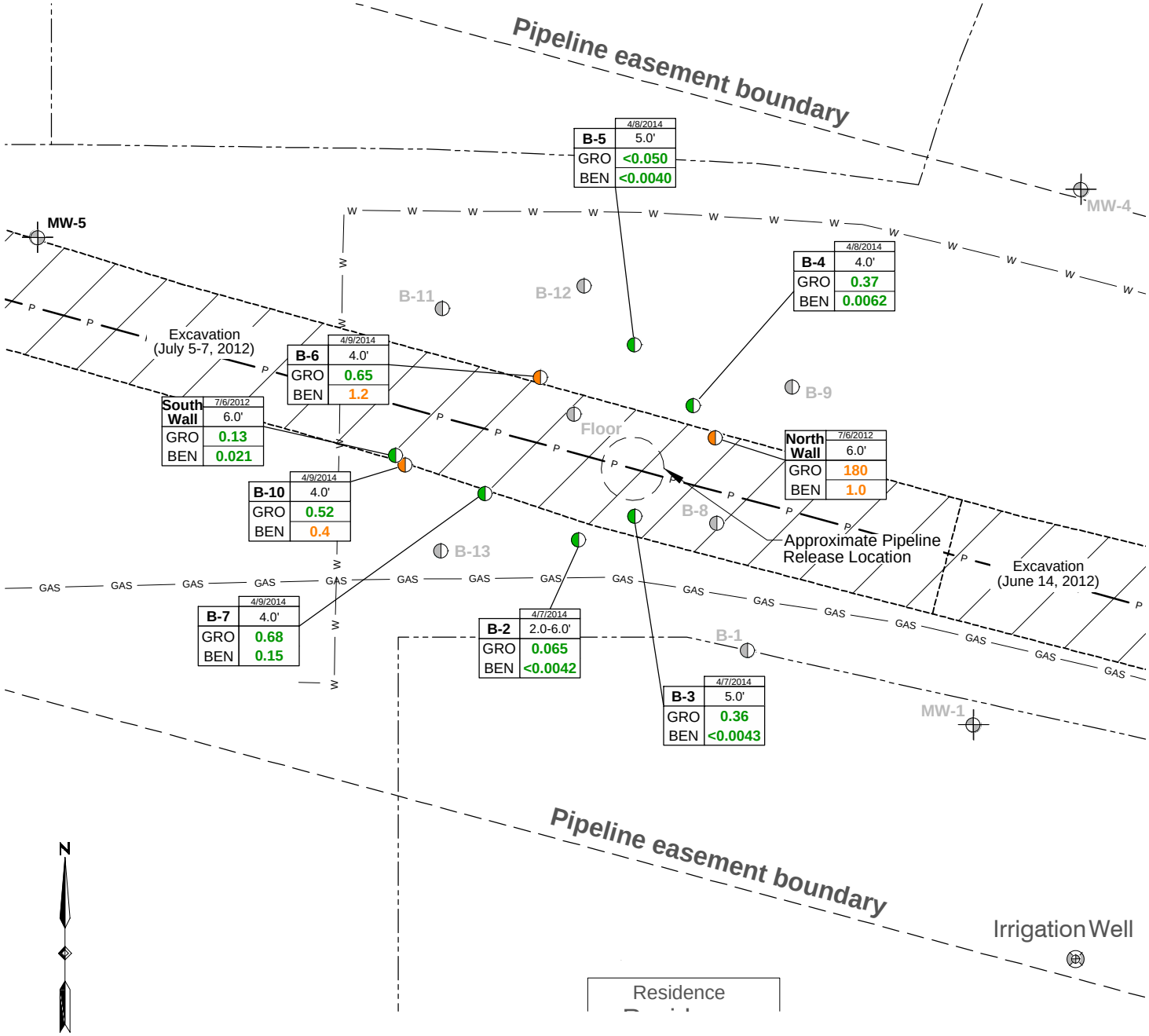

Legend:

- **MW-1** Monitoring Well Location
- **B-1** Boring Location
- Irrigation Well
- Property Line
- P Pipeline
- Pipeline Easement Boundary
- GAS Approximate Gas Line
- W Approximate Water Line
- Dissolved-Phase Constituent Concentrations > KDHE Tier 2 RBSVs
- Dissolved-Phase Constituent Concentrations Not Detected or < KDHE Tier 2 RBSVs

B-2	4/7/2014 2.0-6.0'
GRO	0.065
BEN	<0.0042

- Sample Date
- Sample Depth (Feet)
- Concentration in mg/kg
- Analyte Sampled

Abbreviations	
GRO	Total Petroleum Hydrocarbons Gasoline-Range
BEN	Benzene

0 20 40

Scale in Feet

Vadose-Zone Soil Analytical Results - Surface to 7 Feet Below Ground Surface

Soil Investigation Report and Excavation Work Plan
NuStar Pipeline Operating Partnership L.P.
Andover, Kansas

APEX

Apex Companies, LLC
3015 SW First Avenue
Portland, Oregon 97201

Project Number	1641-06	Figure
July 2014		4

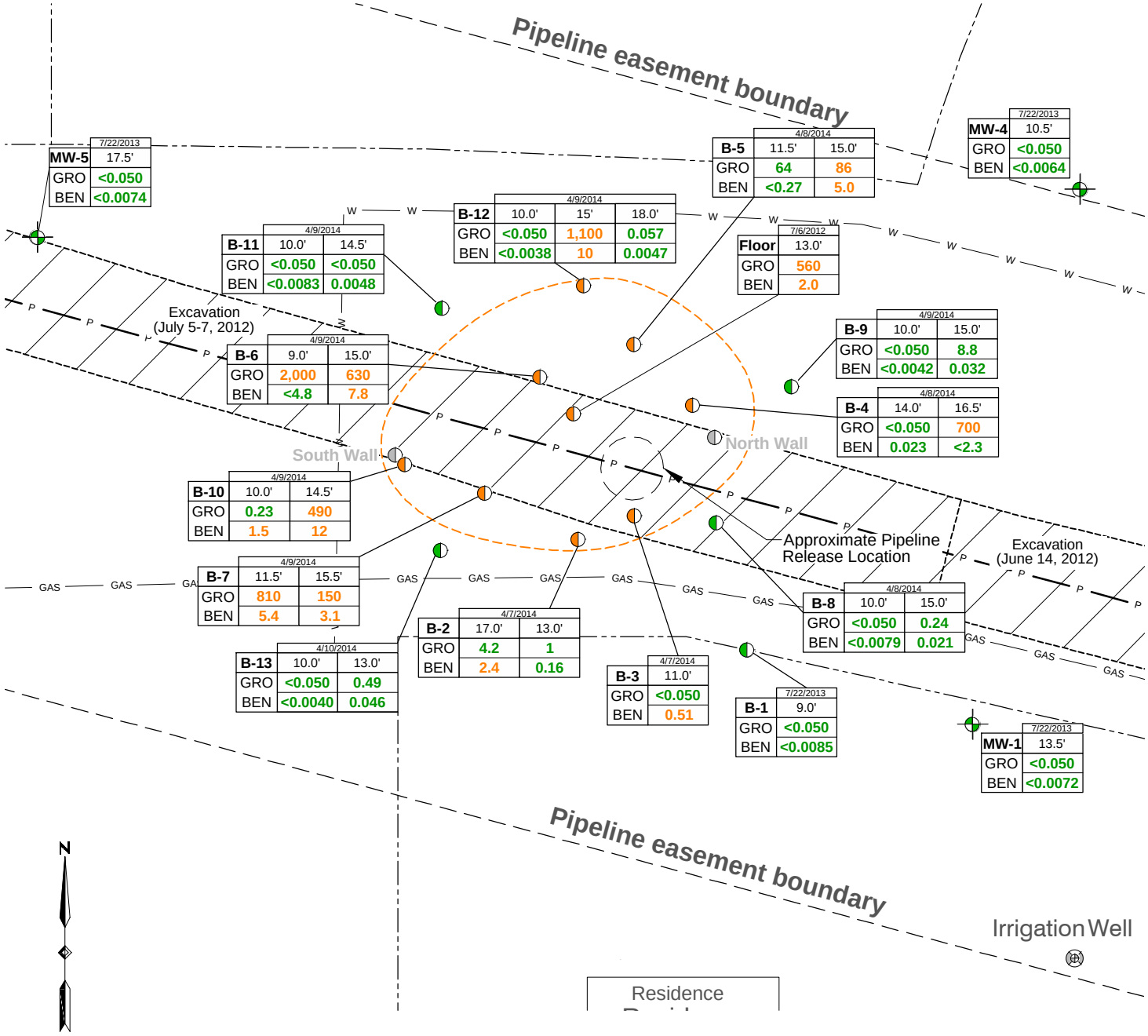

Legend:

- **MW-1** Monitoring Well Location
- **B-1** Boring Location
- Irrigation Well
- Property Line
- P Pipeline
- Pipeline Easement Boundary
- GAS Approximate Gas Line
- W Approximate Water Line
- Dissolved-Phase Constituent Concentrations > KDHE Tier 2 RBSVs
- Dissolved-Phase Constituent Concentrations Not Detected or < KDHE Tier 2 RBSVs

B-13	4/10/2014
	10.0'
GRO	<0.050
BEN	<0.0040

- Sample Date
- Sample Depth (Feet)
- Concentration in mg/kg
- Analyte Sampled
- Extent of Petroleum Constituents in Soil > KDHE Tier 2 RBSVs

Abbreviations	
GRO	Total Petroleum Hydrocarbons Gasoline-Range
BEN	Benzene

0 20 40

Scale in Feet

Vadose-Zone Soil Analytical Results - 7 to 18 Feet Below Ground Surface

Soil Investigation Report and Excavation Work Plan
NuStar Pipeline Operating Partnership L.P.
Andover, Kansas

APEX

Apex Companies, LLC
3015 SW First Avenue
Portland, Oregon 97201

Project Number	1641-06	Figure
	July 2014	5

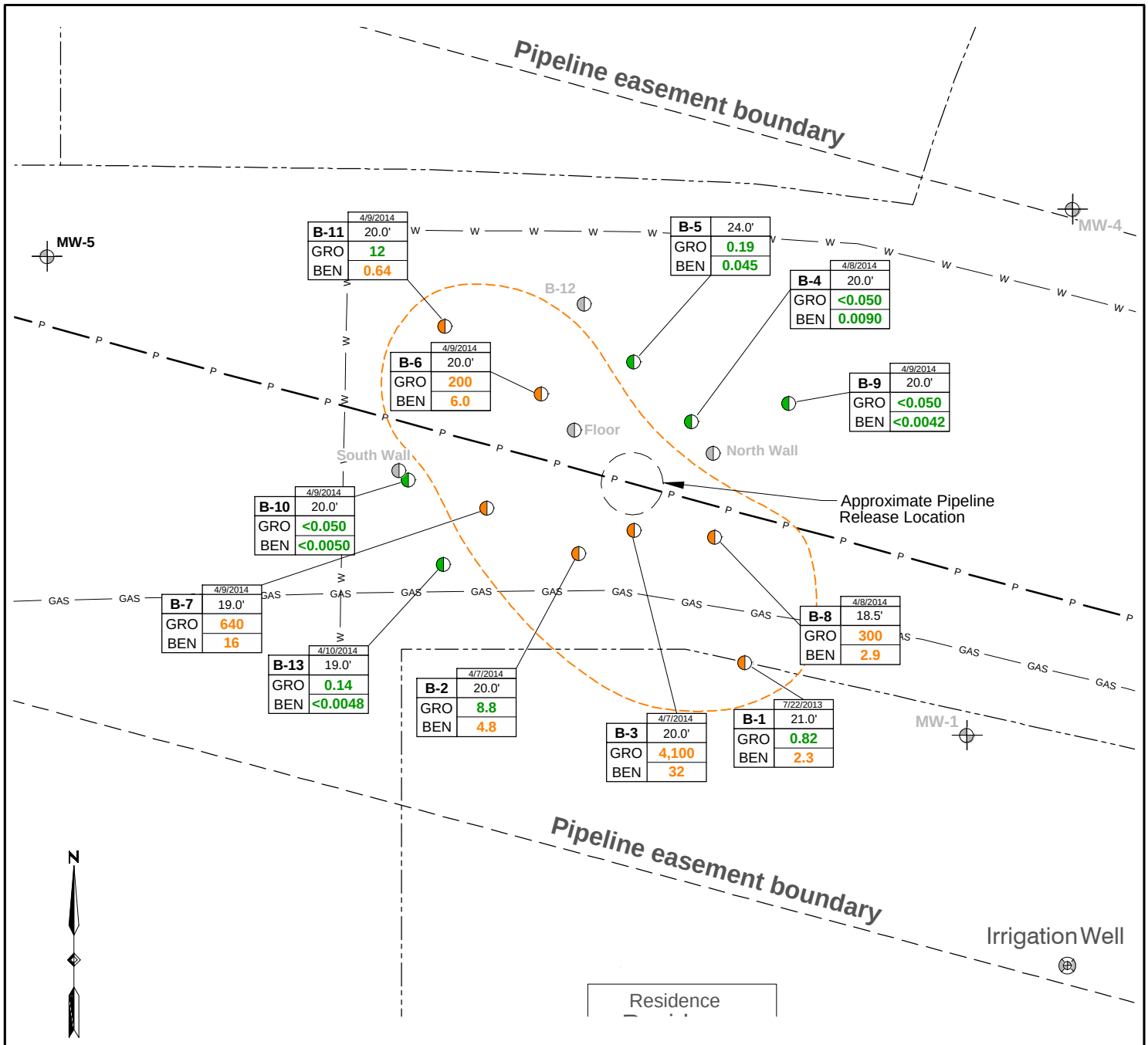

Legend:

- **MW-1** Monitoring Well Location
- **B-1** Boring Location
- Irrigation Well
- Property Line
- P Pipeline
- Pipeline Easement Boundary
- GAS Approximate Gas Line
- W Approximate Water Line
- Dissolved-Phase Constituent Concentrations > KDHE Tier 2 RBSVs
- Dissolved-Phase Constituent Concentrations Not Detected or < KDHE Tier 2 RBSVs

B-13 4/10/2014 19.0' GRO 0.14 BEN <0.0048

- Sample Date
- Sample Depth (Feet)
- Concentration in mg/kg
- Analyte Sampled
- Extent of Petroleum Constituents in Soil > KDHE Tier 2 RBSVs

Abbreviations	
GRO	Total Petroleum Hydrocarbons Gasoline-Range
BEN	Benzene

0 20 40
Scale in Feet

Soil Analytical Results - 18 to 24 Feet Below Ground Surface

Soil Investigation Report and Excavation Work Plan
NuStar Pipeline Operating Partnership L.P.
Andover, Kansas

Apex Companies, LLC
3015 SW First Avenue
Portland, Oregon 97201

Project Number	1641-06	Figure
July 2014		6

Legend:

- **MW-1** — Monitoring Well Location
- Irrigation Well
- **B-1** — Boring Location
- Property Line
- Pipeline
- Pipeline Easement Boundary
- Approximate Gas Line
- Approximate Water Line
- Proposed Excavation Area
- **A** **A'** — Cross-Section Location (See Figure 8)

0 20 40

Scale in Feet

Proposed Soil Excavation Area

Soil Investigation Report and Excavation Work Plan
NuStar Pipeline Operating Partnership L.P.
Andover, Kansas

APEX — Apex Companies, LLC, 3015 SW First Avenue, Portland, Oregon 97201	Project Number	1641-06	Figure
	July 2014		7

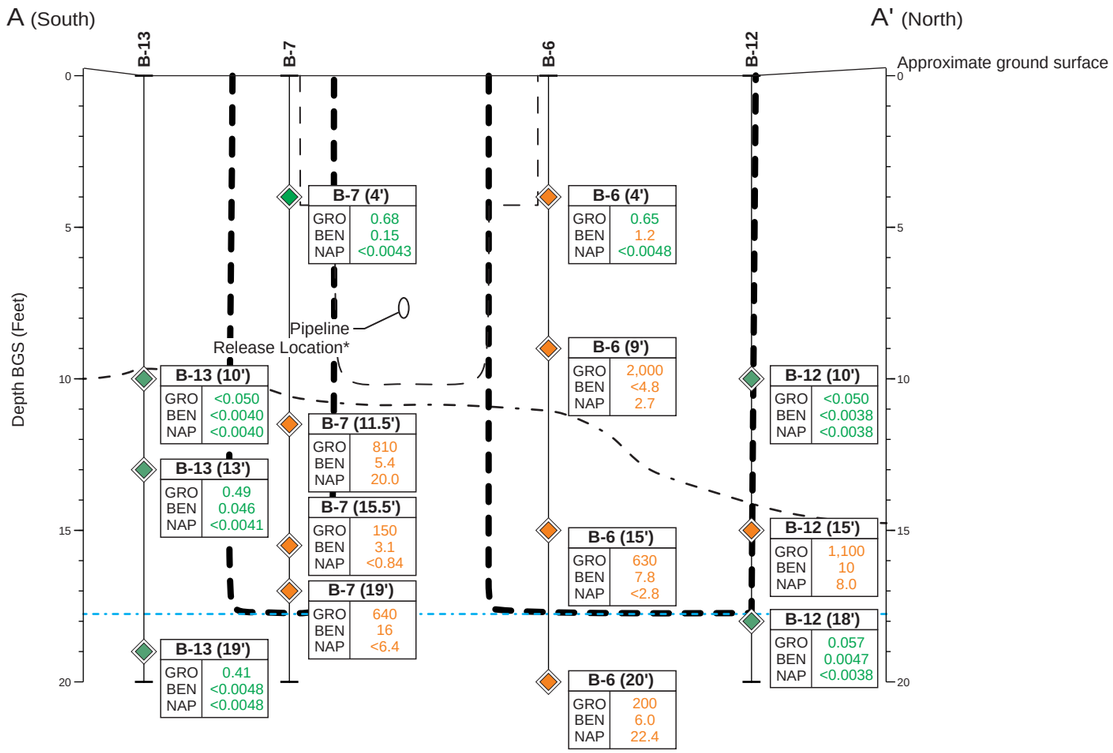

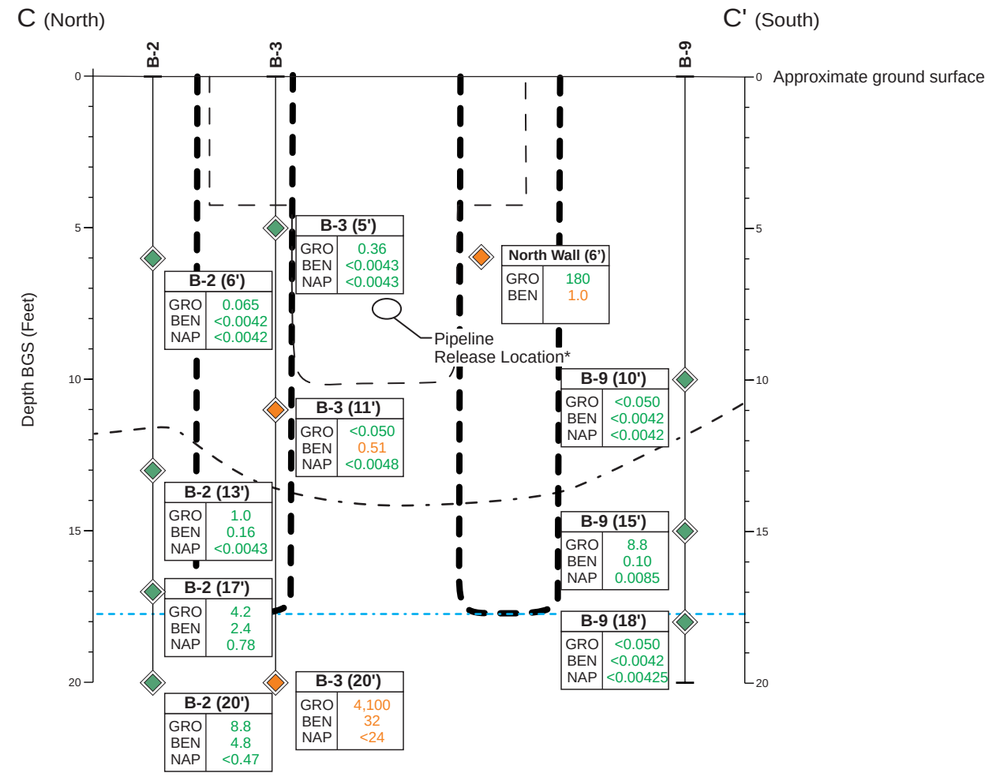

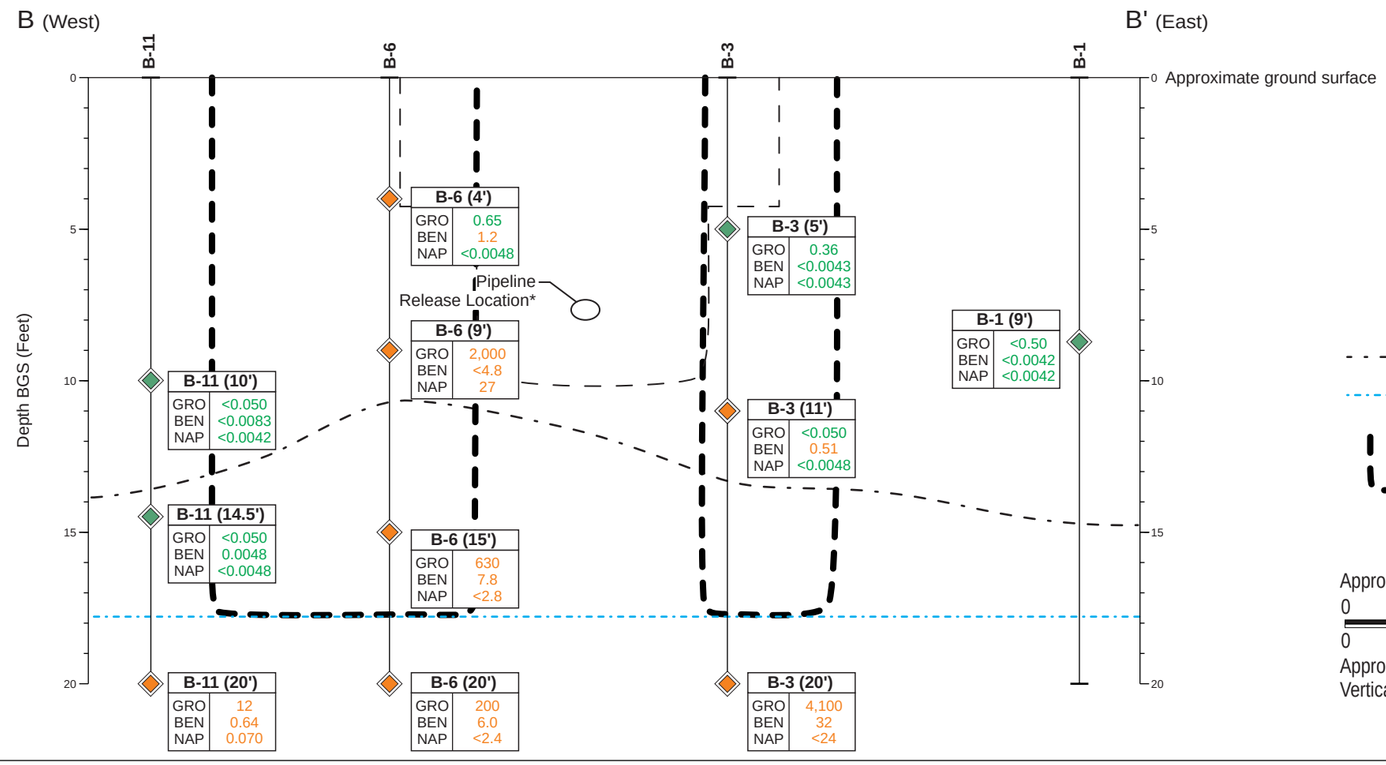

Legend:

B-1 — Boring Identification

Boring Location

B-11 (10') — Sampling Identification and (Depth in Feet Below Ground Surface [BGS])

GRO <0.050 — Concentration in mg/kg

BEN <0.0083

NAP <0.0042 — Analyte Sampled

Soil Sample Collected (Constituent Concentrations > KDHE Tier 2 Risk-Based Screening Values [RBSVs])

Soil Sample Collected (Constituent Concentrations < KDHE Tier 2 RBSVs)

Weathered Bedrock

Seasonally Highest Groundwater Level (Approximate)

Proposed Excavation Area

Approximate Extent of Previous Excavation (July 2012)

Backfill

Native Soil

Approximate Horizontal Scale in Feet

0 10 20

0 5 10

Approximate Vertical Scale in Feet

Vertical Exaggeration x 2

Cross-Sections A-A', B-B', and C-C'

Soil Investigation Report and Excavation Work Plan
NuStar Pipeline Operating Partnership L.P.
Andover, Kansas

APEX — Apex Companies, LLC, 3015 SW First Avenue, Portland, Oregon 97201

Project Number	1641-06	Figure
	July 2014	8

Table 1
Soil Analytical Data - July 2012
Andover Colt Court Release Site
Andover, Kansas

Sample Location	Sample Depth (feet bgs)	Sample Date	DRO	ORO	GRO	Benzene	Toluene	Ethylbenzene	m,p-Xylene	o-Xylene	Total Xylenes	1,2 Dichloroethane	2-Butanone	Cyclohexane	Isopropylbenzene	Methylcyclohexane
			Concentrations in mg/kg (ppm)													
Andover / South Wall	6	7/6/2012	<1.7	<3.4	0.13	0.021	0.0082	<0.005	0.010	0.0059	0.016	<0.005	<0.01	<0.005	<0.005	0.005
Andover / Floor	13	7/6/2012	52	7.4	560	2.0	73.0	34.0	110.0	45.0	160.0	<0.050	<0.10	5.9	3.1	7.3
Andover / North Wall	6	7/6/2012	700	<68	180	1.0	14	7.1	27	14	41	<0.05	<0.1	1.7	1.1	1.7
KDHE Tier 2 Screening Value (soil to groundwater pathway)			5440	--	79.3	0.168	51.2	65.6	--	--	809	0.060	24.15	--	65.14	--

Notes:

1. DRO = Diesel-range organics quantified by IOWA OA-2.
2. ORO = Oil-range organics quantified by IOWA OA-2.
3. GRO = Gasoline-range organics quantified by IOWA OA-1.
4. Volatile organic compounds by U.S. Environmental Protection Agency (EPA) Method 8260B.
5. mg/kg (ppm) = Milligrams per kilogram (parts per million).
6. **Bold** indicates detected concentration above the KDHE screening value.
7. < = Not detected above the method reporting limit (MRL).
8. -- = A KDHE Tier 2 Risk Based Screening Values has not been established.
9. KDHE Tier 2 Screening Values from the *Risk-Based Standards for Kansas, 5th Edition* , October 2010.

Table 2
Soil Analytical Data - July through September 2013
Andover Colt Court Release Site
Andover, Kansas

Sample Location	Sample Depth (feet bgs)	Sample Date	GRO	1,2,4 Trimethylbenzene	1,2 Dichloroethane	1,3,5-Trimethylbenzene	2-Butanone	Benzene	Cyclohexane	Ethylbenzene	Isopropylbenzene	m,p-Xylene	Methylcyclohexane	Naphthalene	n-Butylbenzene	n-Propylbenzene	o-Xylene	Toluene	Total Xylenes
			Concentrations in mg/kg (ppm)																
B-1	21.0	7/22/2013	0.82	0.14	<0.0074	0.037	0.11	2.3	0.046	0.30	<0.0074	1.1	<0.0074	0.043	<0.0074	0.021	<0.26	0.58	1.3
	9.0	7/22/2013	<0.050	<0.0085	<0.0085	<0.0085	<0.017	<0.0085	<0.0085	<0.0085	<0.0085	<0.017	<0.0085	<0.0085	<0.0085	<0.0085	<0.0085	<0.0085	<0.017
MW-1	13.5	7/22/2013	<0.050	<0.0072	<0.0072	<0.0072	<0.014	<0.0072	<0.0072	<0.0072	<0.0072	<0.014	<0.0072	<0.0072	<0.0072	<0.0072	<0.0072	<0.0072	<0.014
MW-2	12.5	7/22/2013	<0.050	<0.0058	<0.0058	<0.0058	<0.012	<0.0058	<0.0058	<0.0058	<0.0058	<0.012	<0.0058	<0.0058	<0.0058	<0.0058	<0.0058	<0.0058	<0.012
MW-3	19.75	7/22/2013	0.40	0.12	<0.0064	0.034	<0.013	0.12	.045	0.037	0.0091	0.062	0.0099	0.016	<0.0064	<0.0064	<0.0064	<0.0064	0.064
	16.5	7/22/2013	<0.050	<0.0068	<0.0068	<0.0068	<0.014	<0.0068	<0.0068	<0.0068	<0.0068	<0.014	<0.0068	<0.0068	<0.0068	<0.0068	<0.0068	<0.0068	<0.014
MW-4	10.5	7/22/2013	<0.050	<0.0064	<0.0064	<0.0064	<0.013	<0.0064	<0.0064	<0.0064	<0.0064	<0.013	<0.0064	<0.0064	<0.0064	<0.0064	<0.0064	<0.0064	<0.013
MW-5	17.5	7/22/2013	<0.050	<0.0074	<0.0074	<0.0074	<0.015	<0.0074	<0.0074	<0.0074	<0.0074	<0.015	<0.0074	<0.0074	<0.0074	<0.0074	<0.0074	<0.0074	<0.015
MW-6	14.5	7/23/2013	<0.050	<0.0070	<0.0070	<0.0070	<0.014	<0.0070	<0.0070	<0.0070	<0.0070	<0.014	<0.0070	<0.0070	<0.0070	<0.0070	<0.0070	<0.0070	<0.014
MW-11	30	9/23/2013	<0.050	<0.005	<0.005	<0.005	<0.01	<0.005	<0.005	<0.005	<0.005	<0.01	<0.005	<0.005	<0.005	<0.005	<0.005	<0.005	<0.01
	40	9/23/2013	0.073	<0.005	<0.005	<0.005	<0.01	<0.005	0.0096	<0.005	<0.005	<0.01	0.0063	<0.005	<0.005	<0.005	<0.005	<0.005	<0.01
MW-12	25	9/24/2013	<0.050	<0.005	<0.005	<0.005	<0.01	<0.005	<0.005	<0.005	<0.005	<0.01	<0.005	<0.005	<0.005	<0.005	<0.005	<0.005	<0.01
	30	9/24/2013	<0.050	<0.005	<0.005	<0.005	<0.01	<0.005	<0.005	<0.005	<0.005	<0.01	<0.005	<0.005	<0.005	<0.005	<0.005	<0.005	<0.01
MW-13	35	9/24/2013	<0.050	<0.005	<0.005	<0.005	<0.01	<0.005	<0.005	<0.005	<0.005	<0.01	<0.005	<0.005	<0.005	<0.005	<0.005	<0.005	<0.01
MW-14	40	9/24/2013	<0.050	<0.005	<0.005	<0.005	<0.01	<0.005	<0.005	<0.005	<0.005	<0.01	<0.005	<0.005	<0.005	<0.005	<0.005	<0.005	<0.01
MW-15	40	9/26/2013	<0.050	<0.005	<0.005	<0.005	<0.01	<0.005	<0.005	<0.005	<0.005	<0.01	<0.005	<0.005	<0.005	<0.005	<0.005	<0.005	<0.01
MW-16	40	9/26/2013	<0.050	<0.005	<0.005	<0.005	<0.01	<0.005	<0.005	<0.005	<0.005	<0.01	<0.005	<0.005	<0.005	<0.005	<0.005	<0.005	<0.01
SVE-1	25	9/24/2013	<0.050	<0.005	<0.005	<0.005	<0.01	<0.005	<0.005	<0.005	<0.005	<0.01	<0.005	<0.005	<0.005	<0.005	<0.005	<0.005	<0.01
	30	9/24/2013	<0.050	<0.005	<0.005	<0.005	<0.01	<0.005	<0.005	<0.005	<0.005	<0.01	<0.005	<0.005	<0.005	<0.005	<0.005	<0.005	<0.01
SVE-2	25	9/25/2013	<0.050	<0.005	<0.005	<0.005	<0.01	<0.005	<0.005	<0.005	<0.005	<0.01	<0.005	<0.005	<0.005	<0.005	<0.005	<0.005	<0.01
	30	9/25/2013	<0.050	<0.005	<0.005	<0.005	<0.01	<0.005	<0.005	<0.005	<0.005	<0.01	<0.005	<0.005	<0.005	<0.005	<0.005	<0.005	<0.01
SVE-3	20	9/25/2013	<0.050	<0.005	<0.005	<0.005	<0.01	<0.005	<0.005	<0.005	<0.005	<0.01	<0.005	<0.005	<0.005	<0.005	<0.005	<0.005	<0.01
	30	9/25/2013	2.4	0.023	<0.005	<0.005	<0.01	<0.005	<0.005	<0.005	<0.005	<0.01	<0.005	0.020	<0.005	<0.005	<0.005	<0.005	<0.01
KDHE Tier 2 Screening Value (soil to groundwater pathway)			79.3	1.07	0.060	5.51	24.15	0.168	--	65.6	65.14	--	--	0.349	10.2	110	--	51.2	809

Notes:

1. GRO = Gasoline-range organics quantified by IOWA OA-1.
2. Volatile organic compounds by U.S. Environmental Protection Agency (EPA) Method 8260B.
3. mg/kg (ppm) = Milligrams per kilogram (parts per million).
4. **Bold** indicates detected concentration above the KDHE screening value.
5. < = Not detected above the method reporting limit (MRL).
6. -- = A KDHE Tier 2 Risk Based Screening Value has not been established.
7. KDHE Tier 2 Screening Values from the *Risk-Based Standards for Kansas, 5th Edition* , October 2010.

Table 3
Soil Analytical Data – April 2014
Andover Colt Court Release Site
Andover, Kansas

Sample Location	Sample Depth (feet bgs)	Sample Date	GRO	1,2,4 Trimethylbenzene	1,2 Dichloroethane	1,3,5-Trimethylbenzene	2-Butanone	Benzene	Cyclohexane	Ethylbenzene	Isopropylbenzene	Methylcyclohexane	Naphthalene	n-Butylbenzene	n-Propylbenzene	Toluene	Total Xylenes
			Concentrations in mg/kg (ppm)														
B-2	2.0 - 6.0	4/7/2014	0.065	<0.0042	<0.0042	<0.0042	<0.0084	<0.0042	0.0054	<0.0042	<0.0042	<0.00042	<0.0042	<0.0042	<0.0042	<0.0042	<0.0084
	13.0	4/7/2014	1.0	<0.0043	<0.0043	<0.0043	<0.0087	0.16	0.019	0.0073	<0.0043	<0.0043	<0.0043	<0.0043	<0.0043	0.0068	<0.0087
	17.0	4/7/2014	4.2	0.33	<0.23	<0.23	<0.46	2.4	<0.23	0.28	<0.23	<0.23	0.78	<0.23	<0.23	1.7	0.86
	20.0	4/7/2014	8.8	2.3	<0.47	0.69	<0.94	4.8	1.4	1.9	<0.47	0.65	<0.47	<0.47	<0.47	6.4	5.7
B-3	5.0	4/7/2014	0.36	<0.0043	<0.0043	<0.0043	<0.0087	<0.0043	<0.0043	<0.0043	<0.0043	<0.0043	<0.0043	<0.0043	<0.0043	<0.0043	<0.0087
	11.0	4/7/2014	<0.050	0.0063	<0.048	<0.0048	<0.0096	0.51	0.015	0.013	<0.0048	<0.0048	<0.0048	<0.0048	<0.0048	<0.0048	0.015
	20.0	4/7/2014	4100	140	<24	48	<49	32	75	110	<24	31	<24	<24	29	390	440
B-4	4.0	4/8/2014	0.37	<0.0050	<0.0050	<0.0050	<0.010	0.0062	<0.0050	<0.0050	<0.0050	<0.0050	<0.0050	<0.0050	<0.0050	<0.0050	<0.010
	14.0	4/8/2014	<0.050	<0.0051	<0.0051	<0.0051	0.044	0.023	0.037	<0.0051	<0.0051	0.0077	<0.0051	<0.0051	<0.0051	<0.0051	<0.010
	16.5	4/8/2014	700	33	<2.3	12	<4.6	<2.3	12	18	<2.3	6.2	3.4	<2.3	7.3	13	48
	20.0	4/8/2014	<0.050	0.0078	<0.0040	<0.0040	<0.0080	0.0090	0.0051	0.0071	<0.0040	<0.0040	<0.0040	<0.0040	<0.0040	0.012	0.021
B-5	5.0	4/8/2014	<0.050	<0.0040	<0.0040	<0.0040	<0.0080	<0.0040	<0.0040	<0.0040	<0.0040	<0.0040	<0.0040	<0.0040	<0.0040	<0.0040	<0.0080
	11.5	4/8/2014	64	5.5	<.27	2.4	<0.54	<0.27	<0.27	0.74	<0.27	0.35	0.97	<0.27	0.88	<0.27	1.3
	15.0	4/8/2014	86	3.7	<0.50	1.1	<0.99	5.0	1.2	3.2	<0.50	<0.50	0.61	<0.50	0.53	12	11
	24.0	4/8/2014	0.19	0.050	<0.0055	0.015	<0.011	0.045	0.014	0.042	<0.0055	0.0061	0.0076	<0.0055	0.0069	<0.0055	0.058
B-6	4.0	4/9/2014	0.65	0.028	<0.0048	0.0073	<0.0096	1.2	0.0064	<0.0048	<0.0048	<0.0048	<0.0048	<0.0048	<0.0048	<0.0048	0.038
	9.0	4/9/2014	2000	190	<4.8	63	<9.5	<4.8	9.9	53	5.1	9.5	27	<4.8	24	110	320
	15.0	4/9/2014	630	22	<2.8	7.1	<5.7	7.8	8.1	17	<2.8	4.0	<2.8	<2.8	4.2	70	74
	20.0	4/9/2014	200	8.1	<2.4	2.5	<4.9	6.0	4.1	6.5	<2.4	<2.4	<2.4	<2.4	<2.4	27	25
B-7	4.0	4/9/2014	0.68	<0.0043	<0.0043	<0.0043	<0.0086	0.15	0.017	0.0072	<0.0043	<0.0043	<0.0043	<0.0043	<0.0043	0.0082	0.014
	11.5	4/9/2014	810	25	<4.9	8.4	<9.8	5.4	8.1	20	<4.9	<4.9	<4.9	<4.9	<4.9	59	73
	15.5	4/9/2014	150	6.8	<0.50	2.3	<1.0	3.1	2.3	5.8	<0.50	1.1	<0.84	<0.50	1.2	21	21
	19.0	4/9/2014	640	32	<6.4	10	<13	16	15	27	<6.4	<6.4	<6.4	<6.4	<6.4	120	110
B-8	10.0	4/8/2014	<0.050	<0.0079	<0.0079	<0.0079	<0.016	<0.0079	<0.0079	<0.0079	<0.0079	<0.0079	<0.0079	<0.0079	<0.0079	<0.0079	<0.016
	15.0	4/8/2014	0.24	<0.0038	<0.0038	<0.0038	<0.0077	0.021	0.0063	<0.0038	<0.0038	<0.0038	<0.0038	<0.0038	<0.0038	<0.0038	<0.0077
	18.5	4/8/2014	300	17	<0.57	5.8	<1.1	2.9	7.9	8.8	0.82	3.3	1.2	<0.57	3.7	13	30
B-9	10.0	4/9/2014	<0.050	<0.0042	<0.0042	<0.0042	<0.0083	<0.0042	<0.0042	<0.0042	<0.0042	<0.0042	<0.0042	<0.0042	<0.0042	<0.0042	<0.0083
	15.0	4/9/2014	8.8	0.094	<0.0045	0.038	0.050	0.032	0.10	0.030	0.0089	0.019	0.0085	0.013	0.031	<0.0045	0.012
	18.0	4/9/2014	<0.050	<0.0042	<0.0042	<0.0042	<0.0084	<0.0042	<0.0042	<0.0042	<0.0042	<0.0042	<0.0042	<0.0042	<0.0042	<0.0042	<0.0084

Please refer to notes at end of table.

Table 3
Soil Analytical Data – April 2014
Andover Colt Court Release Site
Andover, Kansas

Sample Location	Sample Depth (feet bgs)	Sample Date	GRO	1,2,4 Trimethylbenzene	1,2 Dichloroethane	1,3,5-Trimethylbenzene	2-Butanone	Benzene	Cyclohexane	Ethylbenzene	Isopropylbenzene	Methylcyclohexane	Naphthalene	n-Butylbenzene	n-Propylbenzene	Toluene	Total Xylenes
			Concentrations in mg/kg (ppm)														
B-10	4.0	4/9/2014	0.52	0.0098	<0.0044	0.0053	<0.0089	0.4	0.016	0.015	<0.0044	<0.0044	<0.0044	<0.0044	<0.0044	0.016	0.05
	10.0	4/9/2014	0.23	<0.0044	<0.0044	<0.0044	<0.0089	1.5	0.0075	0.011	<0.0044	<0.0044	<0.0044	<0.0044	<0.0044	<0.0044	<0.0089
	14.5	4/9/2014	490	17	<1.9	5.2	<3.8	12	12	16	<1.9	3.1	2.4	<1.9	3.5	32	52
	20.0	4/9/2014	<0.050	<0.0050	<0.0050	<0.0050	<0.0099	<0.0050	<0.0050	<0.0050	<0.0050	<0.0050	<0.0050	<0.0050	<0.0050	0.014	<0.0099
B-11	10.0	4/9/2014	<0.050	<0.0042	<0.0042	<0.0042	<0.0083	<0.0042	<0.0042	<0.0042	<0.0042	<0.0042	<0.0042	<0.0042	<0.0042	<0.0042	<0.0083
	14.5	4/9/2014	<0.050	<0.0048	<0.0048	<0.0048	0.0097	0.0048	<0.0048	<0.0048	<0.0048	<0.0048	<0.0048	<0.0048	<0.0048	<0.0048	<0.0097
	20.0	4/9/2014	12	<0.22	<0.0044	0.070	<0.0088	0.64	0.13	0.31	0.010	0.026	0.070	0.012	0.042	0.44	0.75
B-12	10.0	4/9/2014	<0.050	<0.0038	<0.0038	<0.0038	<0.0077	<0.0038	<0.0038	<0.0038	<0.0038	<0.0038	<0.0038	<0.0038	<0.0038	<0.0038	<0.0077
	15.0	4/9/2014	1100	68	<5.0	24	<10	10	31	<5.0	<5.0	12	8.0	<5.0	13	<5.0	33
	18.0	4/9/2014	0.057	<0.0038	<0.0038	<0.0038	<0.0077	0.0047	<0.0038	<0.0038	<0.0038	<0.0038	<0.0038	<0.0038	<0.0038	<0.0038	<0.0077
B-13	10.0	4/10/2014	<0.050	<0.0040	<0.0040	<0.0040	<0.0079	<0.0040	<0.0040	<0.0040	<0.0040	<0.0040	<0.0040	<0.0040	<0.0040	<0.0040	<0.0079
	13.0	4/10/2014	0.49	<0.0041	<0.0041	<0.0041	0.022	0.046	0.015	0.013	<0.0041	<0.0041	<0.0041	<0.0041	<0.0041	<0.0041	<0.0082
	19.0	4/10/2014	0.14	<0.0048	<0.0048	<0.0048	<0.0096	<0.0048	<0.0048	<0.0048	<0.0048	<0.0048	<0.0048	<0.0048	<0.0048	<0.0048	<0.0096
KDHE Tier 2 Screening Value (soil to groundwater pathway)			79.3	1.07	0.060	5.51	24.15	0.168	--	65.6	65.14	--	0.349	10.2	110	51.2	809

Notes:

1. GRO = Gasoline-range organics quantified by IOWA OA-1.
2. Volatile organic compounds by U.S. Environmental Protection Agency (EPA) Method 8260B.
3. mg/kg (ppm) = Milligrams per kilogram (parts per million).
4. **Bold** indicates detected concentration above the KDHE screening value.
5. < = Not detected above the method reporting limit (MRL).
6. -- = A KDHE Tier 2 Risk Based Screening Value has not been established.
7. KDHE Tier 2 Screening Values from the *Risk-Based Standards for Kansas, 5th Edition* , October 2010.

Appendix A

Field Notes and Well Logs

Apex Companies, LLC
3015 SW First Avenue
Portland, Oregon 97201

Project Name: COLT COURT
Project Number: 1641-04

Boring Number: B-2
Logged By: M. WHITSON
Date: 04-07-14
Site Conditions: CLOUDY (50'S/60'S)
Drilling Contractor: GEOCORE
Drilling Equipment: SSA
Sampler Type: SPLIT SPOON (24")
Depth to Water (ATD):
Surface Elevation: NOT MEASURED
1505 - 1730

Lithologic Description

Fine-Grained Soils
type, (group symbol), color, moisture content, degree of plasticity, consistency, description w/ approximate percentage, notes/observations

Coarse-Grained Soils
type, (group symbol), color, moisture content, grading, density, description w/ approximate percentage, notes/observations

Depth, feet	Core Interval/Recovery	Laboratory Sample ID	PID	Sheen/Blow Counts	Lithologic Description	Well Construction Details and Notes
					PROBE 0-4' FOR UTILITIES; CLEAR	
	24"		0.0	NS	GRASS AND TOP SOIL	
			0.0	NS	SANDY SILT (ML); 10YR 4/3 BROWN, MOIST, SOFT, 25% FINE TO COARSE SAND, 75% LP SILT FINES	NOTE: WHEN PUSHING 2-4' DRILLER GOES TO 6' BGS, CORE RECOVERY IS 24"
	24"	B-2(2-6)	0.0	NS	CLAYEY SILT (ML); 10YR 3/1 V. DARK GRAY, S. MOIST, M. STIFF, 40% CLAY, 60% LP SILT	
5					CORE RECOVERY IS STIFF, LIKELY FROM COMPRESSION BECOMES 10YR 3/2 V. DARK GRAYISH BROWN	WATER ENCOUNTERED IN BOREHOLE, MAY HAVE CLIPPED IRRIGATION LINE (SOIL SAMPLES BELOW 5' WET)
	24"		0.0	NS	SILT W/ GRAVEL (ML); 10YR 5/6 YELLOWISH BROWN, MOIST TO WET, M. STIFF, 15-25% ANGULAR GRAVEL FINE TO MED GRAINED (PARTIALLY LITHIFIED)	
	24"		0.0	NS		
10						10
	24"		0.0	NS	SILT W/ CLAY (ML); 10YR 7/3 V. PALE BROWN, S. MOIST TO MOIST, 10-15% CLAY, 85-90% LP SILT, TRACE GRAVEL (ANGULAR LIMESTONE)	
	20"		0.0	NS		
		B-2(13)	7.2	NS	SILT (ML); 5Y 5/3 OLIVE, S. MOIST, V. STIFF, TRACE CLAY, PARTIALLY LITHIFIED ZONES, MOTTLED BROWN.	
15	24"	B-2(15)	36.3			15
			65.3	NS	SAME AS ABOVE W/ GRAVEL	
	24"	B-2(17)	91.3	NS	3-INCH LENS OF CLAY, SOFT, MOIST LT. BROWN	
	24"	B-2(20)	36.3	NS	SILTY SAND W/ GRAVEL (SP); 5Y 6/3 PALE OLIVE, V. DENSE, DRY TO S. MOIST, 15% SILT, 75% VF-M SAND, 5-10% LITHIFIED GRAVEL ANGULAR F-COARSE	
20						20
					SILT/SILTSTONE (~~SM~~ now ML); 5Y 5/3 OLIVE, DRY TO S. MOIST, V. STIFF TO HARD, PARTIALLY LITHIFIED CRUMBLES INTO SILT FLOCCULES/FINE ANG. GRAVEL	NOTE 5-10% PARTIALLY LITHIFIED, NOT QUITE COMPETENT, BREAKS UP WITH LIGHT HAND PRESSURE
25					CLAYEY SILT W/ GRAVEL (ML); 5Y 7/3 PALE YELLOW, MOIST, STIFF TO V. STIFF, 25% CLAY, 60% SILT, 15% F-M GRAVEL, ANGULAR PARTIALLY LITHIFIED	25 NOTE SMALL STRINGERS OF LITHIFIED MATERIAL FROM 18-20' BGS
					BOTTOM OF BORING @ 20.0' BGS	
30						30
35						35

Apex Companies, LLC
3015 SW First Avenue
Portland, Oregon 97201

Project Name: NUSTAR COLT COURT
Project Number: 1641-04

Boring Number: B-3
Logged By: M. WHITSON
Date: 04-08-14
Site Conditions: CLEAR (40'S) WINDY
Drilling Contractor: GEOCORE
Drilling Equipment: SSA
Sampler Type: SPLIT SPOON (24")
Depth to Water (ATD):
Surface Elevation: NOT MEASURED

Well Construction Details and Notes:

Lithologic Description

Fine-Grained Soils
type, (group symbol), color, moisture content, degree of plasticity, consistency, description w/ approximate percentage, notes/observations

Coarse-Grained Soils
type, (group symbol), color, moisture content, grading, density, description w/ approximate percentage, notes/observations

Depth, feet	Core Interval/Recovery	Laboratory Sample ID	PID	Sheen/Blow Counts	Lithologic Description
					8 INCHES CONCRETE SURFACE
	12"		0.0	NS	SANDY SILT W/ GRAVEL (ML); 5Y 6/1 GRAY, DRY, M. STIFF, 25% FINE SAND, 60% LP SILT, 15% FINE GRAVEL
	24"		0.0	NS	CLAYEY SILT (ML-MH); 2.5Y 3/1 V. DARK GRAY, S. MOIST, STIFF, 30-40% CLAY HP, 60-70% LP-HP SILT
					BECOMES MOTTLED ORANGE-BROWN, 30% CLAY 70% SILT
B-3 (5.0) 0925	24"	X	0.0	NS	SILT (ML); 2.5Y 6/6 OLIVE YELLOW, MOIST, SOFT TRACE CLAY
	24"		0.0	NS	BECOMES M. STIFF - STIFF
					SANDY SILT (ML) 2.5Y 6/6 OLIVE YELLOW, S. MOIST, SOFT, 30% V. FINE SAND, 70% LP SILT, TR. CLAY
B-3 (9.5) 0940	24"	X	0.0	NS	
					CLAYEY SILT (ML-MH); 2.5Y 6/6 OLIVE YELLOW, MOIST, STIFF, 30% P CLAY, 70% LP-HP SILT.
B-3 (11.0) 1000	24"	X	3.0	NS	SMALL <1-INCH LENS OF WHITE GRANULAR MATERIAL (LIMESTONE/GYPSUM)
	24"		1.1	NS	4-INCH LENS OF WHITE CLAYEY MATERIAL (LIMESTONE/GYPSUM)
			4.2	NS	SILT W/ CLAY (ML); 5Y 6/3 PALE OLIVE, S. MOIST, V. STIFF 15% CLAY, 85% LP SILT.
	24"		7.8	NS	
			0.5	NS	BECOMES MOIST
			17.4	NS	
	24"				(11.0') GRAVELLY SILT (ML); 2.5Y 6/2 LIGHT BROWNISH GRAY, S. MOIST, M. STIFF, 35% F-M GRAVEL ANGULAR, 65% LP SILT
B-3 (17.5) 1030		X	246.3	NS	NOTE: GRAVEL MADE UP OF PARTIALLY LITHIFIED MATERIAL
	24"		129.8	NS	2 x 3-INCH LENSES OF CRYSTALLINE CALCITE (5Y 8/3) PALE YELLOW
B-3 (20) 1040		X	1,999	NS	(13.25') SILT (ML) 5Y 6/3 PALE OLIVE, S. MOIST, V. STIFF
					V. CLAYEY SILT (MH); 5Y 6/3 PALE OLIVE, MOIST, SOFT 45-50% CLAY HP, 50-55% P SILT
					(16.5) GRAVELLY CLAYEY SILT (ML)(MH); 5Y 7/3 PALE YELLOW, MOIST, SOFT TO M. STIFF, 25% PARTIALLY LITHIFIED ANG GRAVELS, 30% CLAY, 45% SILT
					(19.5') CLAYEY SILT (ML); 2.5Y 6/6 OLIVE YELLOW, MOIST, SOFT - M. STIFF, 25-30% CLAY, TRACE P. LITHIFIED GRAVELS
					BOTTOM OF BORING @ 20.0' BGS

Depth scale: 5, 10, 15, 20, 25, 30, 35

Apex Companies, LLC
3015 SW First Avenue
Portland, Oregon 97201

Project Name: ANDOVER COLT COURT
Project Number: 1641-04

Boring Number: B-4
Logged By: M. WHITSON
Date: 04-08-14
Site Conditions: CLEAR (50'S/60'S) WINDY
Drilling Contractor: GEOCORE
Drilling Equipment: SSA
Sampler Type: SPLIT SPOON (24")
Depth to Water (ATD):
Surface Elevation: NOT MEASURED

Well Construction Details and Notes:

Lithologic Description

Fine-Grained Soils
type, (group symbol), color, moisture content, degree of plasticity, consistency, description w/ approximate percentage, notes/observations

Coarse-Grained Soils
type, (group symbol), color, moisture content, grading, density, description w/ approximate percentage, notes/observations

Depth, feet	Core Interval/Recovery	Laboratory Sample ID	PID	Sheen/Blow Counts	Lithologic Description
					ASPHALT-CONCRETE SURFACE (6.5-7 INCHES)
	20"		0.0	NS	SILT W/ SAND (ML); 7.5YR 4/2 BROWN, S. MOIST, STIFF, 15-25% VFINE SAND, 75-85% LP SILT FINES
	24"		0.0	NS	SILTY CLAY (CH); 7.5YR 3/2 DARK BROWN, S. MOIST, V. STIFF 40% LP SILT, 60% HP CLAY
B-4(4) 1105		X	0.0	NS	
5	24"		0.0	NS	SILT W/ CLAY (ML); 2.5Y 6/4 LIGHT YELLOWISH BROWN, S. MOIST, M. STIFF, 15% P CLAY, 85% LP SILT TRACE PARTIALLY LITHIFIED GRAVEL, F-M ANGULAR
	24"		0.0	NS	
B-4(9.5) 1130	24"	X	0.0	NS	BECOMES MOTTLED ORANG, TRACE GRAVELS
10	24"		0.0	NS	CLAYEY SILT (ML-MH); 2.5Y 5/4 LIGHT OLIVE BROWN, S. MOIST, M. STIFF, TRACE PARTIALLY LITHIFIED GRAVEL
	24"		0.0	NS	V. CLAYEY SILT (MH); 5Y 6/3 PALE OLIVE, S. MOIST, V. STIFF, 45-50% P CLAY, 50-55% SILT
B-4(14) 1155		X	0.0	NS	CLAYEY SILT WITH GRAVEL (ML); 5Y 6/3 PALE OLIVE, S. MOIST, STIFF, 25-30% CLAY, 55-60% LP SILT, 15% GRAVEL, ANGULAR, CALCITE (FROM FRACTURED LENSES?)
15	24"	X	70.9	NS	
B-4(15) 1205			34.0	NS	0.5-INCH LENS OF CALCITE (CRYSTALLINE
	24"	X	1,089	MS	SILT (ML); 5Y 5/2 OLIVE GRAY, DRY TO S. MOIST, V. STIFF, PARTIALLY LITHIFIED, DRIED CRUST
B-4(16.5) 1225			62.1	NS	
	24"		269	NS	CLAYEY SILT (ML); 5Y 6/3 PALE OLIVE, WET/SAT., V. SOFT, 30% P. CLAY, 60% SILT, 10% F-M GRAVEL
B-4(20) 1245		X	0.0	NS	
20					SILT (ML); 5Y 5/2 OLIVE GRAY, S. MOIST, M. STIFF-STIFF, NO COARSE MATERIAL, TRACE CLAY
25					CLAYEY SILT W/ GRAVEL (ML); 2.5Y 6/3 LIGHT YELLOWISH BROWN MOIST, SOFT-M. STIFF, 30% CLAY, 50-55% SILT, 15-20% ANGULAR GRAVEL, PARTIALLY LITHIFIED STRINGERS AT BASE OF SECTION (19.5')
30					BOTTOM OF BORING AT 20.0' BGS
35					

Apex Companies, LLC
3015 SW First Avenue
Portland, Oregon 97201

Project Name: NUSTAR COLT COURT
Project Number: 1641-04

Boring Number: B-5
Logged By: M. WHITSON
Date: 04-08-14
Site Conditions: P. CLOUDY (50's) H. WINDS
Drilling Contractor: GEOCORE
Drilling Equipment: SSA
Sampler Type: SPLIT SPOON (24")
Depth to Water (ATD):
Surface Elevation: NOT MEASURED

Well Construction Details and Notes:

Lithologic Description

Fine-Grained Soils
type, (group symbol), color, moisture content, degree of plasticity, consistency, description w/ approximate percentage, notes/observations

Coarse-Grained Soils
type, (group symbol), color, moisture content, grading, density, description w/ approximate percentage, notes/observations

Depth, feet	Core Interval/Recovery	Laboratory Sample ID	PID	Sheen/Blow Counts	Lithologic Description
					ASPHALT CONCRETE SURFACE
	20"		0.0	NS	SILTY CLAY (CH); 2.5Y 3/1 V. DARK GRAY, S. MOIST, STIFF-V. STIFF, 40% SILT, 60% CLAY
	24"		0.0	NS	V. CLAYEY SILT (MH); 2.5Y 3/2 VERY DARK GRAYISH BROWN, S. MOIST, V. STIFF, 45-50% CLAY, 50-55% SILT
B-5(5) 1315	24"	X	0.0	NS	MOTTLED LIGHT BROWN/GRAY; TRACE PARTIALLY LITHIFIED FRAGMENTS (GRAVEL)
	24"		0.0	NS	2-INCH LENS OF TAN CLAY
	24"		0.0	NS	SILT W/ CLAY (ML); 2.5Y 6/4 LT YELLOWISH BROWN, S. MOIST, STIFF, 15% CLAY, 85% SILT TRACE LITHIFIED MATERIAL
B-5(10) 1340		X	0.0	NS	
	24"	X	1.9	NS	BECOMES 5Y 6/3 PALE OLIVE, STIFF-V. STIFF
B-5(11.5) 1350	24"		1.1	NS	
			3.8	NS	CLAYEY SILT W/ GRAVEL (ML); 5Y 5/2 OLIVE GRAY, S. MOIST, M. STIFF TO STIFF, CALCITE STRINGERS THROUGHOUT INTERVAL
B-5(15) 1425	24"	~~TAX~~ X	797.7	LS	SILTY CLAY (CH); 5Y 5/2 OLIVE GRAY MOTTLED BROWN, MOIST, SOFT, 40% SILT, 60% CLAY
			188.3	NS	
	24"		22.8	NS	
			48.0	NS	(15.75') SILT W/ GRAVEL (ML); 5Y 5/2 OLIVE GRAY, S. MOIST PARTIALLY LITHIFIED GRAVEL, FLOCULATED SILT
B-5(18) 1500	24"	X	10.1	NS	
			25.3	NS	CLAY (CH); 5Y 5/3 OLIVE, S. MOIST, HARD, NO COARSE MATERIAL.
B-5(21) 1515	24"	X	1.0	NS	CLAYEY ~~SILT~~ GRAVELLY SILT (ML); 5Y 6/2 LIGHT OLIVE GRAY, S. MOIST, M. STIFF, 30% CLAY, 30% M-C GRAVEL, ANGULAR (CALCITE) 40% SILT
B-5(25) 1530	24"	X	0.0	NS	
			0.0	NS	
	12"		0.0	NS	CLAYEY SILT (ML); 2.5Y 6/6 OLIVE YELLOW, MOIST, SOFT TO M. STIFF, 30% CLAY, 65% SILT, TRACE GRAVEL
					CLAYEY SILT W/ GRAVEL (ML); 2.5Y 6/4 LIGHT YELLOWISH BROWN, MOIST, M. STIFF TO STIFF, MOTTLED ORANGE, 30% CLAY, 45% LP SILT, 15% F-M GRAVEL (PARTIALLY LITHIFIED)
					V. CLAYEY SILT (MH); 2.5Y 6/4 LIGHT YELLOWISH BROWN, MOIST, M. STIFF-STIFF, 45% CLAY, 55% SILT.
					BOTTOM OF BORING @ 25.0' BGS

NOTE SPLIT B-5(15) SAMPLE WITH KDHE

Apex Companies, LLC 3015 SW First Avenue Portland, Oregon 97201	Project Name: NUSTAR COLT COURT Project Number: 1641-04	Boring Number: B-6 Logged By: M. WHITSON Date: 04-09-14 Site Conditions: CLEAR (40'S) CALM Drilling Contractor: GEOCORE Drilling Equipment: SSA Sampler Type: SPLIT SPOON (24") Depth to Water (ATD): Surface Elevation: NOT MEASURED

Depth, feet	Core Interval/Recovery	Laboratory Sample ID	PID	Sheen/Blow Counts	Lithologic Description	Well Construction Details and Notes:
					Fine-Grained Soils type, (group symbol), color, moisture content, degree of plasticity, consistency, description w/ approximate percentage, notes/observations Coarse-Grained Soils type, (group symbol), color, moisture content, grading, density, description w/ approximate percentage, notes/observations ASPHALT CONCRETE SURFACE	
	12"		0.0	NS	CLAYEY SILT (MH); 10YR 3/2 VERY DARK GRAYISH BROWN, S. MOIST, M. STIFF, 40% CLAY, 60% SILT	
B-6(2) 0900	24"	X	0.1	NS	BECOMES STIFF, CLAY TO 20-30%	
B-6(4) 0905		X	9.3	NS		
	24"		6.8	NS	BECOMES 10YR 4/2 DARK GRAYISH BROWN, MOTTLED REDDISH BROWN	5
			3.3	NS	BECOMES 5Y 6/4 PALE OLIVE	
	24"		5.7	NS		
B-6(9) 0920	24"	X	1,456	MS	SILT W/ GRAVEL (ML); 5Y 7/2 LIGHT GRAY, S. MOIST, SOFT - M. STIFF, PARTIALLY LITHIFIED GRAVEL F-M (15%)	10
	24"		999.4	LS	CLAYEY SILT (ML); 5Y 6/3 PALE OLIVE, S. MOIST - MOIST, M. STIFF, 30% CLAY, 70% LP SILT, TR. F-M GRAVEL	
	24"		912.5	LS	BECOMES V. STIFF - HARD (11.25') 1-INCH LENS OF POWDERED MATERIAL (GYPSUM)	
			210.4	NS		
B-6(15) 0945	24"	X	152.3	NS	(12.0') CLAYEY SILT W/ GRAVEL (ML); 5Y 5/3 OLIVE, MOIST, SOFT, 30% CLAY, 45% SILT 15% GRAVEL (CALCITE) / INTERVAL INTERBEDDED W/ SEVERAL 1-INCH CALCITE VEINS	15
	24"		53.7	NS		
B-6(18) 1000		X	17.0	NS	SILT W/ CLAY (ML); 5Y 6/4 PALE OLIVE, S. MOIST - DRY, HARD, 15% CLAY, 85% SILT, CALCITE STRINGERS	
	24"		166.9	NS		
B-6(20) 1010		X	999.2	LS	CLAYEY SILT (ML); 5Y 6/4 PALE OLIVE, MOIST, M. STIFF 30-40% CLAY, ~~60~~ MN 50-60% SILT, TRACE GRAVEL (CALCITE), LENSES	20
					LENS OF SOFT, MOIST - WET MATERIAL (1.5-INCH)	
					SILTY GRAVEL W/ CLAY (GM); 2.5Y 7/6 YELLOW, MOIST, DENSE, 25% SILT, 70% F-C ANG. GRAVEL (PARTIALLY LITHIFIED) 5% CLAY, BROKEN UP / FRACTURED	25
					BOTTOM OF BORING @ 20.0' BGS	
30						30
35						35

Apex Companies, LLC
3015 SW First Avenue
Portland, Oregon 97201

Project Name: NUSTAR COLT COURT
Project Number: 1641-04

Boring Number: B-7
Logged By: M. WHITSON
Date: 04-09-14
Site Conditions: CLEAR (60'S) CALM
Drilling Contractor: GEOCORE
Drilling Equipment: SSA
Sampler Type: SPLIT SPOON (24")
Depth to Water (ATD):
Surface Elevation: NOT MEASURED

Well Construction Details and Notes:

Lithologic Description

Fine-Grained Soils
type, (group symbol), color, moisture content, degree of plasticity, consistency, description w/ approximate percentage, notes/observations

Coarse-Grained Soils
type, (group symbol), color, moisture content, grading, density, description w/ approximate percentage, notes/observations

Depth, feet	Core Interval/Recovery	Laboratory Sample ID	PID	Sheen/Blow Counts	Lithologic Description
					ASPHALT CONCRETE SURFACE
	14"		0.0	NS	SILTY CLAY (CH); 2.5Y 4/1 DARK GRAY, S.MOIST, STIFF, 60% CLAY, 40% SILT
B-7 (2) 1045	24"	X	0.0	NS	BECOMES CLAYEY SILT (MH); 10YR 4/2 DARK GRAYISH BROWN 40% CLAY, 60% SILT
B-7 (4) 1050		X	2.3	NS	
	24"		1.5	NS	
5			2.8	NS	SILT W/ CLAY (ML); 2.5Y 5/3 LIGHT OLIVE BROWN, S.MOIST, M. STIFF-STIFF, 15-20% CLAY, 80-85% SILT, TR. GRAVEL
	24"		3.6	NS	
			7.7	NS	BECOMES MOIST, TRACE SAND
			12.5	NS	
B-7 (10) 1110	24"	X	228.2	NS	CLAYEY SILT (ML); 5Y 6/3 PALE OLIVE, S.MOIST, HARD, PARTIALLY LITHIFIED, 30% CLAY, 70% SILT
10					
B-7 (11.5) 1120	24"	X	1,432	MS	SEVERAL 0.5-1-INCH VEINS OF CALCITE (CRYSTALLINE) 10-15% F-C GRAVEL (FROM VEINS)
	16"		1,530	MS	
15	24"		207.2	NS	SILT (ML); 5Y 5/4 OLIVE, DRY TO S.MOIST, HARD, VERY SMALL <1 CM VEINS OF CALCITE (CRYSTALLINE)
B-7 (15.5) 1135		X	95.8	NS	
			46.9	NS	BECOMES P. LITHIFIED SILTSTONE
	24"		1,106	LS	(15.75) BECOMES MOIST LIGHT GRAY
B-7 (19) 1200	24"	X	1,523	MS	CLAYEY SILT W/ GRAVEL (ML); 2.5Y 7/4 PALE YELLOW S.MOIST, STIFF, 30% CLAY, 45% SILT, 15% F-M ANG GRAVEL (CALCITE)
20					CLAYEY SILT (ML-MH); 2.5Y 5/6 LIGHT OLIVE BROWN, MOIST, SOFT, 35% CLAY, 65% SILT, NO COARSE MATERIAL
25					
30					
35					

Apex Companies, LLC 3015 SW First Avenue Portland, Oregon 97201	Project Name: ANDOVER COLT COURT Project Number: 1641-04	Boring Number: B-8 Logged By: M. WHITSON Date: 04-08-14 Site Conditions: CLEAR (60'S) H. WINDS Drilling Contractor: GEOCORE Drilling Equipment: SSA Sampler Type: SPLIT SPOON (24") Depth to Water (ATD): Surface Elevation: NOT MEASURED

Depth, feet	Core Interval/Recovery	Laboratory Sample ID	PID	Sheen/Blow Counts	Lithologic Description	Well Construction Details and Notes:
					Fine-Grained Soils type, (group symbol), color, moisture content, degree of plasticity, consistency, description w/ approximate percentage, notes/observations Coarse-Grained Soils type, (group symbol), color, moisture content, grading, density, description w/ approximate percentage, notes/observations CONCRETE CURB SURFACE (- INCHES)	
	8"		0.0	NS	SANDY SILT W/ GRAVEL (ML); 2.5Y 7/3 PALE YELLOW, DRY TO S. MOIST, 30% FINE SAND, 45% SILT, 15% AND GRAVEL	
	12"		0.0	NS	CLAYEY SILT (MH); 10YR 3/2 V. DARK GRAYISH BROWN 40% CLAY, 60% LP SILT	
5	24"	X	0.0	NS	BECOMES 2.5Y 5/3 LIGHT OLIVE BROWN.	5
	23"		0.0	NS	SILT W/ CLAY (ML) 2.5Y 6/4 LIGHT YELLOWISH BROWN, S. MOIST, M. STIFF-STIFF, 15-25% CLAY	
	24"		0.0	NS	MOTTLED ORANGE/BROWN	
10	24"	X	0.0	NS	SILTY CLAY (CH); 5Y 5/2 OLIVE GRAY, DRY-S. MOIST, HARD, MOSTLY CLAY	10
	19"		0.0	NS	GRAVELLY SILT W/ CLAY (ML); 5Y 5/2 OLIVE GRAY, MOIST, M. STIFF, 35% VF-M GRAVEL (PARTIALLY LITHIFIED) 15% CLAY	
15	24"	X	0.0	NS	SAME AS ABOVE 3-4 x 0.5-INCH LENSES OF CALCITE (CRYSTALLINE)	15
	24"	X	24.0 ~~0.0~~	NS	LAMINATED SILT AND CLAY (SHALE- PARTIALLY LITHIFIED)	
	24"	X	157.0 136.9	NS NS	CLAY (CH) 5Y 7/2 LIGHT GRAY, S. MOIST, HARD, PARTIALLY LITHIFIED, BECOMING MUDSTONE, IRON STAINING ON VERTICAL FRACTURES	
20					CLAYEY SILT (MH); 2.5Y 7/4 PALE YELLOW, S. MOIST, STIFF BECOMES HARD LENS OF CALCITE (CRYSTALLINE) LENSES OF CALCITE THROUGH SECTION	20
25					BOTTOM OF THE BORING @ 20.0' BGS	25
30						30
35						35

B-8(5) 1620
B-8(10) 1670
B-8(15) 1700
B-8(17) 1740
B-8(18.5) 1725

Apex Companies, LLC 3015 SW First Avenue Portland, Oregon 97201	Project Name: NUSTAR COLT COURT Project Number: 1641-04	Boring Number: B-9 Logged By: M. WHITSON Date: 04-09-14 Site Conditions: CLEAR (70'S) WINDY Drilling Contractor: GEOCORE Drilling Equipment: SSA Sampler Type: 24" SPLIT SPOON Depth to Water (ATD): Surface Elevation: NOT MEASURED

Depth, feet	Core Interval/Recovery	Laboratory Sample ID	PID	Sheen/Blow Counts	Lithologic Description	Well Construction Details and Notes
					Fine-Grained Soils type, (group symbol), color, moisture content, degree of plasticity, consistency, description w/ approximate percentage, notes/observations Coarse-Grained Soils type, (group symbol), color, moisture content, grading, density, description w/ approximate percentage, notes/observations ASPHALT CONCRETE ROAD SURFACE	
	14"		0.0	NS	SILTY CLAY (CH); 2.5Y 3/1 VERY DARK GRAY, S. MOIST STIFF, 60% CLAY, 40% SILT	
	24"		0.0 0.0	NS NS	BECOMES 10YR 3/3 DARK BROWN	
5	24"	X	0.0 0.0	NS NS	CLAYEY SILT (ML); 2.5Y 5/3 LIGHT OLIVE BROWN, S. MOIST, V. STIFF, 40% CLAY	5
	24"		0.0	NS	BECOMES PARTIALLY LITHIFIED, SILTSTONE/MUDSTONE, NOTE IRON STAINING	
	24"		0.0	NS		
10	24"	X	0.0	NS	SILT W/ CLAY (ML); 5Y 5/3 OLIVE, S. MOIST, HARD PARTIALLY LITHIFIED, 15-20% CLAY	10
	24"		0.0	NS	1-INCH VEIN OF CALCITE (CRYSTALLINE)	
15	24"	X	29.1 27.4	NS NS	CLAYEY GRAVELLY SILT (ML); 5Y 5/3 OLIVE, MOIST-WET, SOFT, 30% CLAY, 30% FINE GRAVEL, 40% SILT SAME MATERIAL, W SEVERAL 1-INCH CALCITE VEINS	15
	24"	X	8.1 0.0	NS NS	SILT (ML): 5Y 5/2 OLIVE GRAY, DRY, HARD, PARTIALLY LITHIFIED TO SILTSTONE, SMALL CALCITE VEIN (~1mm)	
20	24"		0.0	NS	CLAYEY SILT (ML); 2.5Y 7/2 LIGHT GRAY, DRY, HARD, ALMOST LITHIFIED, 30% CLAY, 70% SILT SAME MATERIAL WITH CALCITE VEINS/GRAVELS	20
					BOTTOM OF BORING @ 20.0' BGS	
25						25
30						30
35						35

B-9 (5.5) 1340

B-9 (10) 1350

B-9 (15) 1405

B-9 (18)

Apex Companies, LLC
3015 SW First Avenue
Portland, Oregon 97201

Project Name: NUSTAR COLT COURT
Project Number: 1641-04

Boring Number: B-10
Logged By: M. WHITSON
Date: 04-09-14
Site Conditions: CLEAR (70'S) WINDY
Drilling Contractor: GEDCORE
Drilling Equipment: SSA
Sampler Type: 24" SPLIT SPOON
Depth to Water (ATD):
Surface Elevation: NOT MEASURED

Well Construction Details and Notes:

Lithologic Description

Fine-Grained Soils
type, (group symbol), color, moisture content, degree of plasticity, consistency, description w/ approximate percentage, notes/observations

Coarse-Grained Soils
type, (group symbol), color, moisture content, grading, density, description w/ approximate percentage, notes/observations

Depth, feet	Core Interval/Recovery	Laboratory Sample ID	PID	Sheen/Blow Counts	Lithologic Description
					ASPHALT CONCRETE ROAD SURFACE
	15"		0.0	NS	SILTY CLAY (CH); 2.5Y 3/1 VERY DARK GRAY, S. MOIST, STIFF, 60% CLAY, 40% SILT
B-10(2) 1510	24"	X	0.0	NS	
					BECOMES 10YR 3/3 DARK BROWN
B-10(4) 1515		X	1.4	NS	
5	24"		1.7	NS	CLAYEY SILT (ML) 10YR 6/6 BROWNISH YELLOW, S. MOIST SOFT - M. STIFF, 30% CLAY, 70% SILT
	24"		0.0	NS	
	24"		3.7	NS	BECOMES 5Y 5/2 OLIVE GRAY, HARD
B-10(10) 1540		X	6.7	NS	SAME MATERIAL AS ABOVE WITH CALCITE VEINS SEVERAL, <1-INCH THICK
10	24"		4.4	NS	
	24"		7.1	NS	BECOMES MOIST, CALCITE VEINS TO 1-2-INCHES
			20.7	NS	
B-10(14.5) 1600	24"	X	103.7	NS	SILT W/ CLAY (ML); 5Y 5/2 OLIVE GRAY, DRY, HARD, PARTIALLY LITHIFIED (SILTSTONE)
B-10(16) 1605		X	0.0	NS	
15	24"		0.8	NS	CLAYEY SILT W/ GRAVEL (ML); 2.5Y 6/3 LIGHT YELLOWISH BROWN, MOIST, SOFT, 30% CLAY, 45% SILT, 15% ANG F GRAVEL
					BECOMES V. STIFF LENSES OF CALCITE
	24"		3.0	NS	BECOMES S. MOIST, SOFT.
B-10(20) 1620		X			
20					BOTTOM OF BORING @ 20.0' BGS
25					
30					
35					

Apex Companies, LLC
3015 SW First Avenue
Portland, Oregon 97201

Project Name: NUSTAR ANDOVER CC
Project Number: 1611-04

Boring Number: B-11
Logged By: M. WHITSON
Date: 04-09-14
Site Conditions: CLEAR (70'S)
Drilling Contractor: GEOCORE
Drilling Equipment: SSA
Sampler Type: 24" SPLIT SPOON
Depth to Water (ATD):
Surface Elevation: NOT MEASURED

Lithologic Description

Fine-Grained Soils
type, (group symbol), color, moisture content, degree of plasticity, consistency, description w/ approximate percentage, notes/observations

Coarse-Grained Soils
type, (group symbol), color, moisture content, grading, density, description w/ approximate percentage, notes/observations

Well Construction Details and Notes:

Depth, feet	Core Interval/Recovery	Laboratory Sample ID	PID	Sheen/Blow Counts	Description
					ASPHALT CONCRETE ROAD SURFACE
	NR 4"		0.0	NS	CLAYEY SILT DARK BROWN
	24"		0.0	NS	V. CLAYEY SILT (MH); 10YR 3/2 V. DARK GRAYISH BROWN S. MOIST, STIFF 45% CLAY 55% SILT
5	24"	X (B-11 (5) 1655)	0.0	NS	BECOMES 5Y 6/3 PALE OLIVE
	24"		0.0	NS	BECOMES HARD, FRACTURES FILLED W/ CALCITE/IRON
					TRACE GRAVEL FROM VEINS, FILLINGS
10	24"	X (B-11 (10) 1705)	0.0	NS	BECOMES 5Y 5/2 OLIVE GRAY
	24"		0.0	NS	INCREASE IN CALCITE VEINS, SEVERAL <1-INCH VEINS
					BECOMES MOIST
	24"		0.0	NS	
			0.6	NS	GRAVELLY SILTY CLAY (CH); 5Y 6/2 LT OLIVE GRAY, MOIST,
15	24"	X (B-11 (14.5) 1725)	0.6	NS	SOFT, 30% SILT, 30% GRAVEL, 40% CLAY. WITH CALCITE
			0.0	NS	CLAYEY SILT GLEY 1 5/5G GREENISH GRAY, S. MOIST,
	24"		0.0	NS	V. STIFF TO HARD
			0.0	NS	BECOMES 5Y 6/3 PALE OLIVE, V. HARD, ALMOST SILTSTONE/MUDSTONE
	14"		2.1	NS	TRACE GRAVEL AND CALCITE VEINS, MOTTLED BROWN/ORANGE
20		(B-11 (20) 1740)	23.8	NS	BECOMES V. HARD.
					BOTTOM OF BORING AT 20.0' BGS
25					
30					
35					

Apex Companies, LLC
3015 SW First Avenue
Portland, Oregon 97201

Project Name: NVSTAR COLT COURT
Project Number: 1641-04

Boring Number: B-12
Logged By: M. WHITSON
Date: 04-10-14
Site Conditions: CLEAR (60'S) CALM
Drilling Contractor: GEOCORE
Drilling Equipment: SSA
Sampler Type: 24" SPLIT SPOON
Depth to Water (ATD):
Surface Elevation: NOT MEASURED

Well Construction Details and Notes:

Lithologic Description

Fine-Grained Soils
type, (group symbol), color, moisture content, degree of plasticity, consistency, description w/ approximate percentage, notes/observations

Coarse-Grained Soils
type, (group symbol), color, moisture content, grading, density, description w/ approximate percentage, notes/observations

Depth, feet	Core Interval/Recovery	Laboratory Sample ID	PID	Sheen/Blow Counts	Lithologic Description
					CONCRETE CURB SURFACE
	2"		0.0	NS	SILT W/ CLAY (ML); 2.5Y 5/4 LIGHT OLIVE BROWN, S. MOIST, M. STIFF, 15-20% CLAY, 80-85% SILT, TR. GRAVEL
	24"		0.0	NS	V. CLAYEY SILT (MH); 10YR 4/2 DARK GRAYISH BROWN, MOIST, STIFF, 45% CLAY, 55% SILT
B-12(5) 0855	24"	X	0.0	NS	
5			0.0	NS	CLAYEY SILT (ML); 10YR 7/8 YELLOW, MOIST, M. STIFF, 30% CLAY, 70% SILT
	24"		0.0	NS	BECOMES PARTIALLY LITHIFIED
	20"		0.0	NS	SILT W/ CLAY (ML); 2.5Y 7/6 YELLOW, S. MOIST-MOIST, STIFF, 15-25% CLAY, 75-85% LP SILT
B-12(10) 0910		X			
10	21"		0.0	NS	CLAYEY SILT (ML); 5Y 6/3 PALE OLIVE, S. MOIST, STIFF TO V. STIFF, LITHIFIED IN SMALL LENSES
			0.0	NS	SEVERAL SMALL <1-INCH VEINS OF CALCITE
	24"		5.6	NS	BECOMES MOIST, SOFT
B-12(14) 0930		X			
15	24"	X	836.2	NS	BECOMES STIFF TO V. STIFF
B-12(15) 0945					BECOMES HARD
	24"		0.1	NS	<1-INCH VEIN OF GYPSUM OR CALCITE
B-12(18) 1000		X	0.0	NS	1.5-INCH VEIN OF CALCITE (CRYSTALLINE)
	24"		4.8	NS	BECOMES SOFT, MOIST
					BECOMES ORANGE BROWN MOTTLED
20					BOTTOM OF BORING @ 20.0' BGS
25					
30					
35					

Apex Companies, LLC
3015 SW First Avenue
Portland, Oregon 97201

APEX

Project Name: ANDOVER COLT COURT
Project Number: 1641-04

Boring Number: B-13
Logged By: M. WHITSON
Date: 04-10-14
Site Conditions: CLEAR (70's) L. WIND
Drilling Contractor: GEOCORE
Drilling Equipment: SSA
Sampler Type: 24" SPLITSPOON
Depth to Water (ATD):
Surface Elevation: NOT MEASURED

Lithologic Description

Fine-Grained Soils
type, (group symbol), color, moisture content, degree of plasticity, consistency, description w/ approximate percentage, notes/observations

Coarse-Grained Soils
type, (group symbol), color, moisture content, grading, density, description w/ approximate percentage, notes/observations

Well Construction Details and Notes:

Depth, feet	Core Interval/Recovery	Laboratory Sample ID	PID	Sheen/Blow Counts	Lithologic Description
					GRASS GROUND COVER/TOP SOIL
	20"		0.0	NS	SILTY CLAY (CH) 7.5 YR 4/1 DARK GRAY, MOIST, STIFF 40% SILT, 60% CLAY
	24"		0.0	NS	BECOMES CLAYEY SILT (MH); 7.5YR 4/1 DARK GRAY, M. STIFF MOIST-WET, 40-45% CLAY, 55-60% SILT
B-13(5) 1045	24"	X	0.0	NS	
5					BECOMES PARTIALLY LITHIFIED, V. STIFF, MOTTLED GRAY/ORANGE
					BECOMES 2.5Y 5/2 GRAYISH BROWN
	24"		0.0	NS	2-INCH LENS OF FINE SAND
	24"		0.0	NS	BECOMES PARTIALLY LITHIFIED
B-13(10) 1115		X			
10					
	24"		0.0	NS	SILT (ML); 5Y 5/2 OLIVE GRAY, S. MOIST, V. STIFF, PARTIALLY LITHIFIED
B-13(13) 1130	24"	X	7.8	NS	SEVERAL SMALL <1CM CALCITE VEINS
					BECOMES MOIST, TR. GRAVEL FROM VEINS
15	24"		10.2	NS	MOIST, SOFT LENS (6-INCHES)
			3.6	NS	BECOMES HARD, SILTSTONE; 5Y 5/2 OLIVE GRAY, SMALL VEIN OF CALCITE
	24"		8.1	NS	
B-13(18)		X	0.0	NS	BECOMES SOFT, MOIST
B-13(19)	24"		2.2	NS	BECOMES HARD, CALCITE (CRYSTALLINE) IN VEINS
20			0.0	NS	
25					
30					
35					

Sample Descriptions

Classification of soils in this report is based on visual field and laboratory observations which include density/consistency, moisture condition, and grain size, and should not be construed to imply field nor laboratory testing unless presented herein. Visual-manual classification methods of ASTM D 2488 were used as an identification guide.

Soil descriptions consist of the following:
MAJOR CONSTITUENT with additional remarks; color, moisture, minor constituents, density/consistency.

Density/Consistency

Soil density/consistency in borings is related primarily to the Standard Penetration Resistance. Soil density/consistency in test pits and push probe explorations is estimated based on visual observation and is presented parenthetically on test pit and push probe exploration logs.

SAND and GRAVEL Density	Standard Penetration Resistance in Blows/Foot
Very loose	0 - 4
Loose	4 - 10
Medium dense	10 - 30
Dense	30 - 50
Very dense	>50

SILT or CLAY Density	Standard Penetration Resistance in Blows/Foot	Approximate Shear Strength in TSF
Very soft	0 - 2	<0.125
Soft	2 - 4	0.125 - 0.25
Medium stiff	4 - 8	0.25 - 0.5
Stiff	8 - 15	0.5 - 1.0
Very Stiff	15 - 30	1.0 - 2.0
Hard	>30	>2.0

Moisture

Dry	Little perceptible moisture.
Sl. Moist	Some perceptible moisture, probably below optimum.
Moist	Probably near optimum moisture content.
Wet	Much perceptible moisture, probably above optimum.

Minor Constituents

	Estimated Percentage
Not identified in description	0 - 5
Slightly (clayey, silty, etc.)	5 - 12
Clayey, silty, sandy, gravelly	12 - 30
Very (clayey, silty, etc.)	30 - 50

Sampling Symbols

BORING AND PUSH-PROBE SYMBOLS

- Recovery
- No Recovery
- Temporarily Screened Interval
- PID — Photoionization Detector Reading
- W — Water Sample
- Sample Submitted for Chemical Analysis
- NS — No Sheen
- SS — Slight Sheen
- MS — Moderate Sheen
- HS — Heavy Sheen
- BF — Biogenic Film

TEST PIT SOIL SAMPLES

- Grab (Jar)
- Bag
- Shelby Tube

Groundwater Observations and Monitoring Well Construction

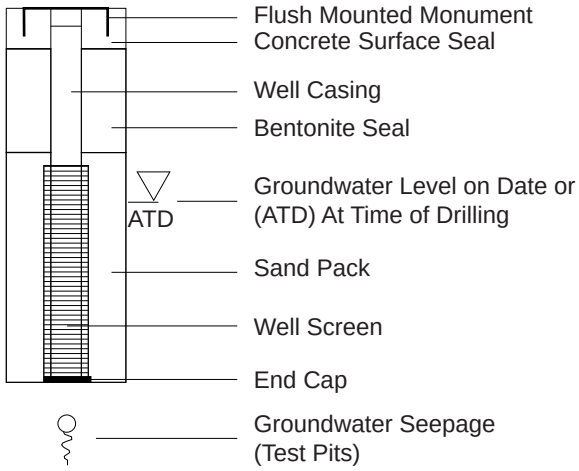

Key to Exploration Logs

Soil Investigation Report and Excavation Work Plan
NuStar Pipeline Operating Partnership L.P.
Andover, Kansas

APEX — Apex Companies, LLC, 3015 SW First Avenue, Portland, Oregon 97201	Project Number	1641-04	Figure
	May 2014		Key

Apex Companies, LLC
3015 SW First Avenue
Portland, Oregon 97201

Soil Investigation Report and Excavation Work Plan
NuStar Pipeline Operating Partnership L.P.
Andover, Kansas

Boring Number: **B-2**

Project Number: **1641-04**
Logged By: M. Whitson
Date: April 7, 2014
Site Conditions: Cloudy, 50 (°F)
Drilling Contractor: Geocore
Drilling Equipment: SSA
Sampler Type: Split Spoon (24")
Depth to Water (ATD):
Surface Elevation: --

Depth, feet	Core Interval/Recovery	Laboratory Sample ID	PID	Sheen	Lithologic Description
			<5	NS	Grass and topsoil over SANDY SILT (ML); brown (10 YR 5/6), moist, soft, (25% fine to coarse sand, 75% low plastic silt fines).
		B-2(2-6)	<5	NS	CLAYEY SILT (ML); Dark gray (10YR 3/1), slightly moist, medium stiff, (60% low plastic silt, 40% clay).
			<5	NS	Becomes dark grayish brown (10YR 3/2).
5					
			<5	NS	
				NS	SILT with gravel (ML); yellowish brown (10YR 5/6), moist to wet, medium stiff, 15-25% angular gravel, fine to medium grained silt.
10					
		B-2(13)	<5	NS	SILT with clay (ML); pale brown (10YR 7/3), slightly moist to moist, (85-95% low plastic silt, 10-15% clay, trace gravel).
			<5	NS	SILT (ML); olive (5Y 5/3), slightly moist, very stiff, trace clay. Partially lithifed zones, mottled brown.
		B-2(15.5)	7.2	NS	
			36.8	NS	
15			65.3	NS	3 inch Clay lense, soft, moist, light brown.
			91.3	NS	SILTY SAND with gravel (SP); pale olive (5Y 6/3), very dense, dry to slightly moist, (75% very fine to medium sand, 15% silt, 5-10% lithified angular gravel).
		B-2(17)	36.3	NS	
		B-2(20)	<5	NS	SILT (ML); olive (5Y 5/3), dry to slightly moist, very stiff to heard, partially lithified, crumbles into silt floccules with fine angular gravel.
20					CLAYEY SILT with gravel (ML); pale yellow (5Y 7/3), moist, stiff to very stiff, (60% silt, 25% clay 15% fine to medium angular gravel).
					Bottom of Boring at 20.0' BGS.
25					
30					
35					

Boring Details and Notes:

Apex Companies, LLC
3015 SW First Avenue
Portland, Oregon 97201

Soil Investigation Report and Excavation Work Plan
NuStar Pipeline Operating Partnership L.P.
Andover, Kansas

Boring Number: **B-3**

Project Number: **1641-04**
Logged By: M. Whitson
Date: April 8, 2014
Site Conditions: Clear, 40s (°F)
Drilling Contractor: Geocore
Drilling Equipment: SSA
Sampler Type: Split Spoon (24")
Depth to Water (ATD):
Surface Elevation: --

Depth, feet	Core Interval/Recovery	Laboratory Sample ID	PID	Sheen	Lithologic Description
			<5	NS	Concrete surface over sandy SILT with gravel (ML); gray (5Y 6/1), dry, medium stiff, (60% low plastic silt, 25% fine sand, 15% fine gravel).
			<5	NS	Clayey SILT (ML-MH); very dark gray (2.5Y 3/1), slightly moist, stiff, (60-70% low to high plastic silt, 30-40% clay)
		B-3(5.0)			Becomes orange-brown 60-70% silt.
5			<5	NS	SILT (ML), olive yellow (2.5Y 6/6), moist, soft, trace clay.
					Becomes medium stiff to stiff.
			<5	NS	Sandy SILT (ML), olive yellow (2.5Y 6/6), slightly moist, soft, (70% low plastic, 30% very fine sand, trace clay).
		B-3(9.5)	<5	NS	Clayey SILT (ML-MH); olive yellow (2.5Y 6/6), moist, stiff, (70% low plastic silt, 30% plastic clay.
10		B-3(11.0)			<1-inch lens of white granular material.
					4-inch lens of white clayey material.
					SILT with clay (ML); pale olive (5Y 6/3), slightly moist, very stiff, (85% low plastic silt, 15% clay).
			<5	NS	Becomes moist.
					Gravelly SILT (ML); light brownish gray (2.5Y 6/2), slightly moist, medium stiff, (65% low plastic silt, 35% fine to medium gravel).
			<5	NS	3-inch lens of crystalline calcite, pale yellow (5Y 8/3).
			7.8	NS	SILT (ML); pale olive (5Y 6/3), slightly moist, very stiff.
15		B-3(17.5)	<5	NS	Clayey SILT (MH), pale olive (5Y 7/3), moist, soft, (50-55% plastic silt, 45-50% high plastic clay).
			17.4	NS	Gravelly, clayey SILT (ML, MH); pale yellow (5Y 7/3), moist, soft to medium stiff, (45% silt, 30% clay, 25% angular gravel).
		B-3(20)	246.3	NS	
			129.8	NS	
20			1,999	NS	Clayey SILT (ML); olive yellow (2.5Y 6/6), moist, soft to medium stiff, (25-50% clay trace gravels).
					Bottom of Boring at 20.0' BGS.
25					
30					
35					

Boring Details and Notes:

Apex Companies, LLC
3015 SW First Avenue
Portland, Oregon 97201

Soil Investigation Report and Excavation Work Plan
NuStar Pipeline Operating Partnership L.P.
Andover, Kansas

Boring Number: **B-4**

Project Number: **1641-04**
Logged By: M. Whitson
Date: April 8, 2014
Site Conditions: Clear, 40s (°F)
Drilling Contractor: Geocore
Drilling Equipment: SSA
Sampler Type: Split Spoon (24")
Depth to Water (ATD):
Surface Elevation: --

Depth, feet	Core Interval/Recovery	Laboratory Sample ID	PID	Sheen	Lithologic Description	Boring Details and Notes:
			<5	NS	Asphalt-concrete surface over SILT with sand (ML); brown (7.5YR 4/2), slightly moist, stiff, (75-85% slow plastic silt fines, 15-25% very fine sand).	
		B-4(4)	<5	NS		
5			<5	NS	Silty CLAY (CH); dark brown (7.5 YR 3/2), slightly moist, very stiff, (60% high plastic clay, 40% low plastic silt).	5
			<5	NS	SILT with clay (ML); light yellowish brown (2.5Y 6/4), slightly moist, medium stiff, (85% low plastic silt, 15% plastic clay). Trace fine to medium angular gravel.	
		B-4(9.5)	<5	NS	Becomes mottled orange, trace gravels.	
10			<5	NS	Clayey SILT (ML); light olive brown (2.5Y 5/4), slightly moist, medium stiff, trace gravel.	10
		B-4(14)	<5	NS	Very clayey SILT (MH); pale olive (5Y 6/3), slightly moist, very stiff, (50-55% silt, 45-50% plastic clay).	
			<5	NS	Clayey SILT with gravel (ML); pale olive (5Y 6/3), slightly moist, stiff, (55-60% low plastic fines, 25-35% clay, 15% angular gravel).	
15		B-4(15)	70.9	NS	0.5-inch lens of calcite.	15
			34.0	NS	SILT (ML); olive gray (5Y 5/2), dry to slightly moist, very stiff.	
		B-4(65)	1,019	NS	Clayey SILT (ML), pale olive, wet, very soft, (60% silt, 30% plastic clay, 10% fine to medium gravel).	
			62.1	NS		
		B-4(20)	26.9	NS	SILT (ML); olive gray (5Y 5/2), slightly moist, medium stiff to stiff, trace clay.	
20			<5	NS	Clayey SILT with gravel (ML); light yellowish brown (2.5Y 6/3), moist, soft to medium stiff, (50-55% silt, 30% clay, 15-20% angular gravel).	20
					Bottom of Boring at 20.0' BGS.	
25						25
30						30
35						35

Apex Companies, LLC
3015 SW First Avenue
Portland, Oregon 97201

Soil Investigation Report and Excavation Work Plan
NuStar Pipeline Operating Partnership L.P.
Andover, Kansas

Boring Number: **B-5**

Project Number: **1641-04**
Logged By: M. Whitson
Date: April 8, 2014
Site Conditions: Partly Cloudy, 50s (°F)
Drilling Contractor: Geocore
Drilling Equipment: SSA
Sampler Type: Split Spoon (24")
Depth to Water (ATD):
Surface Elevation: --

Depth, feet	Core Interval/Recovery	Laboratory Sample ID	PID	Sheen	Lithologic Description	Boring Details and Notes:
			<5	NS	Asphalt and concrete surface over silty CLAY (CH); very dark gray (2.5Y 3/1), slightly moist, stiff-very stiff, (60% clay, 40% silt).	
			<5	NS	Very clayey SILT (MH); very dark grayish brown (2.5Y 3/2), slightly moist, very stiff, (50-55% silt, 45-50% clay).	
		B-5(5)			Mottled light brown/gray.	
5			<5	NS	Trace gravel.	5
					2-inch lens of tan clay.	
			<5	NS	SILT with clay (ML); light yellowish brown, slightly moist, stiff, (85% silt, 15% clay, trace gravel).	
		B-5(10)	<5	NS		
10						10
		B-5(11.5)	<5	NS	Becomes pale olive (5Y 6/3); stiff to very stiff.	
			<5	NS		
			<5	NS		
			<5	NS	Clayey SILT with gravel (ML), olive gray (5Y 5/2), slightly moist, medium stiff to stiff.	
		B-5(15)	797.7	LS		
15			188.3	NS	Silty CLAY (CH); olive gray (5Y 5/2), moist, soft, (60% clay, 40% silt).	15
		B-5(18)	22.8	NS	SILT with gravel (ML); olive gray (5Y 5/2), slightly moist, gravel, trace silt.	
			48	NS	CLAY (CH); olive (5Y 5/3), slightly moist, hard, no coarse material.	
			10.1	NS		
			25.3	NS		
20		B-5(21)	<5	NS	Clayey SILT with gravel (ML); light olive gray (5Y 6/2), slightly moist, medium stiff, (40% silt, 30% clay, 30% medium to coarse gravel).	20
			<5	NS	Clayey SILT (ML); olive yellow (2.5Y 6/6), moist, soft to medium stiff, (65% silt, 30% clay, trace gravel).	
		B-5(25)	<5	NS	Clayey SILT (ML); light yellowish brown (2.5Y 6/4), moist, medium stiff to stiff. 45% low plastic silt, (30% clay, 15% fine to medium gravel).	
25			<5	NS	Very clayey SILT (MH), light yellowish brown (2.5Y 6/4), moist, medium stiff to stiff, (55% silt, 45% clay).	25
					Bottom of Boring at 25.0' BGS.	
30						30
35						35

Apex Companies, LLC
3015 SW First Avenue
Portland, Oregon 97201

Soil Investigation Report and Excavation Work Plan
NuStar Pipeline Operating Partnership L.P.
Andover, Kansas

Boring Number: **B-6**

Project Number: **1641-04**
Logged By: M. Whitson
Date: April 9, 2014
Site Conditions: Clear, 40s (°F)
Drilling Contractor: Geocore
Drilling Equipment: SSA
Sampler Type: Split Spoon (24")
Depth to Water (ATD):
Surface Elevation: --

Depth, feet	Core Interval/Recovery	Laboratory Sample ID	PID	Sheen	Lithologic Description	Boring Details and Notes:
		B-6(2)	<5	NS	Asphalt-concrete surface over clayey SILT (MH); very dark grayish brown (10YR 3/2), slightly moist, medium stiff, (60% silt, 40% clay).	
			<5	NS	Becomes stiff, 30% to 20% clay.	
		B-6(4)	9.3	NS	Becomes dark grayish brown (10YR 4/2), mottled reddish brown.	
5			6.8	NS		5
			<5	NS	Becomes pale olive (5Y 6/4).	
		B-6(9)	5.7	NS		
			1,456	NS	SILT with gravel (ML); light gray (5Y 7/2), slightly moist, soft to medium stiff, (15% fine to medium gravel).	
10			999.4	LS	Clayey SILT (ML); pale olive (5Y 6/3), slightly moist to moist, medium stiff, (70% low plastic, silt, 30% clay, trace fine to medium gravel).	10
					Becomes very stiff to hard.	
			912.5	LS	1-inch lens of powered gypsum.	
		B-6(15)	210.4	NS		
15			152.3	NS	Clayey SILT (ML); olive (5Y 5/3), moist, soft, (45% silt, 30% clay, 15% gravel).	15
		B-6(18)	53.7	NS	SILT with clay (ML); pale olive (5Y 6/4), slightly moist to dry, hard, (85% silt, 15% clay).	
			17	NS		
		B-6(20)	166.9	NS	Clayey SILT (ML); pale olive (5Y 6/4), moist, medium stiff, (50-60% silt, 30-40% clay, trace gravel).	
20			989.2	LS	Lens of soft, moist to wet material.	20
					Silty GRAVEL with clay (GM); yellow (2.5Y 7/6), moist, dense, (70% fine to coarse angular gravel, 25% silt, 5% clay).	
					Bottom of Boring at 20.0' BGS.	
25						25
30						30
35						35

Apex Companies, LLC
3015 SW First Avenue
Portland, Oregon 97201

Soil Investigation Report and Excavation Work Plan
NuStar Pipeline Operating Partnership L.P.
Andover, Kansas

Boring Number: **B-7**

Project Number: **1641-04**
Logged By: M. Whitson
Date: April 9, 2014
Site Conditions: Clear, 60s (°F)
Drilling Contractor: Geocore
Drilling Equipment: SSA
Sampler Type: Split Spoon (24")
Depth to Water (ATD):
Surface Elevation: --

Depth, feet	Core Interval/Recovery	Laboratory Sample ID	PID	Sheen	Lithologic Description	Boring Details and Notes:
		B-7(2)	<5	NS	Asphalt-concrete surface over sitly CLAY (CH); dark gray (2.5Y 4/1), slightly moist, stiff, (60% clay, 40% silt).	
			<5	NS		
		B-7(4)	<5	NS	Becomes clayey SILT (MH); dark grayish brown (10YR 4/2), (60% silt, 40% clay).	
			<5	NS		
5					SILT with clay (ML); light olive brown (2.5Y 5/3), slightly moist, medium stiff to stiff, (80-85% silt, 15-20% clay, trace gravel).	5
			<5	NS		
			<5	NS		
			7.7	NS	Becomes moist, trace sand.	
		B-7(10)	12.5	NS		
10			228.2	NS	Clayey SILT (ML); pale olive (5Y 6/3), slightly moist, hard, (70% silt, 30% clay).	10
		B-7(11.5)	1,432	NS	Several 0.5 to 1-inch calcite veins. 10-15% fine to coarse gravel.	
			1,530	NS		
			207.2	NS		
15		B-7(15.5)	95.8	NS	SILT (ML); olive (5Y 5/4), dry to slightly moist, hard, trace calcite. Becomes lithified siltstone.	15
			146.9	NS	Becomes moist, light gray.	
		B-7(19)	1,106	NS	Clayey SILT with gravel (ML); pale yellow (2.5Y 7/4), (45% silt, 30% clay, 15% fine to medium gravel).	
			1,523	NS	Clayey SILT (ML-MH), light olive brown (2.5Y 5/6), moist, soft, (65% silt, 35% silt).	
20					Bottom of Boring at 20.0' BGS.	20
25						25
30						30
35						35

Apex Companies, LLC
3015 SW First Avenue
Portland, Oregon 97201

Soil Investigation Report and Excavation Work Plan
NuStar Pipeline Operating Partnership L.P.
Andover, Kansas

Boring Number: **B-8**

Project Number: **1641-04**
Logged By: M. Whitson
Date: April 8, 2014
Site Conditions: Partly Cloudy, 50s (°F)
Drilling Contractor: Geocore
Drilling Equipment: SSA
Sampler Type: Split Spoon (24")
Depth to Water (ATD):
Surface Elevation: --

Depth, feet	Core Interval/Recovery	Laboratory Sample ID	PID	Sheen	Lithologic Description	Boring Details and Notes:
			<5	NS	Concrete curb surface over sandy SILT with gravel (ML); pale yellow (2.5Y 7/3), dry to slightly moist, (45% silt, 30% fine sand, 15% angular gravel).	
			<5	NS	Clayey SILT (MH); dark grayish brown (10YR 3/2), (60% low plastic silt, 40% clay).	
		B-8(5)	<5	NS		
5					Becomes light olive brown (2.5Y 5/3).	5
			<5	NS	SILT with clay (ML); light yellowish brown (2.5Y 6/4), slightly moist, medium stiff to stiff, (15-25% clay).	
					Becomes mottled orange brown.	
		B-8(10)	<5	NS		
10					Silty CLAY (CH); olive gray (5Y 5/2), dry to slightly moist, hard, mostly clay.	10
			<5	NS		
			<5	NS		
		B-8(15)	<5	NS	Gravelly SILT with clay (ML); olive gray (5Y 5/2), moist, medium stiff, (35% very fine to medium gravel, 15% clay).	
					Same as above, 0.5-inch lens of calcite.	
15			<5	NS	Laminated silt and clay.	15
		B-8(17)			CLAY (CH); light gray (5Y 7/2), slightly moist, hard.	
			24	NS	Clayey SILT (MH); pale yellow (2.5Y 7/4), slightly moist, stiff.	
					Becomes hard.	
					Lens of calcite.	
		B-8(18.5)	157	NS	Lenses of calcite.	
			136.8	NS		
20					Bottom of Boring at 20.0' BGS.	20
25						25
30						30
35						35

Apex Companies, LLC
3015 SW First Avenue
Portland, Oregon 97201

Soil Investigation Report and Excavation Work Plan
NuStar Pipeline Operating Partnership L.P.
Andover, Kansas

Boring Number: **B-9**

Project Number: **1641-04**
Logged By: M. Whitson
Date: April 9, 2014
Site Conditions: Clear, 70s (°F)
Drilling Contractor: Geocore
Drilling Equipment: SSA
Sampler Type: Split Spoon (24")
Depth to Water (ATD):
Surface Elevation: --

Depth, feet	Core Interval/Recovery	Laboratory Sample ID	PID	Sheen	Lithologic Description	Boring Details and Notes:
			<5	NS	Asphalt-concrete road surface over silty CLAY (CH); very dark gray (2.5Y 3/1), slightly moist, stiff, (60% clay, 40% silt).	
			<5	NS		
			<5	NS	Becomes dark brown (10YR 3/3).	
5			<5	NS		5
			<5	NS		
					Clayey SILT (ML); light olive (5Y 5/3), slightly moist, very stiff, no clay.	
			<5	NS	Becomes partially lithified, siltstone/mudstone, note iron staining.	
		B-9(10)	<5	NS		
10						10
			<5	NS		
					SILT with clay (ML); olive (5Y 5/3), slightly moist, hard, (partially lithified 15-20% clay).	
			<5	NS	1-inch vein of calcite.	
					Clayey gravelly SILT (ML); olive (5Y 5/3), moist, wet, soft, (40% silt, 30% clay, 30% fine gravel).	
		B-9(15)				
15			29.1	NS	Same material with several 1-inch calcite veins.	15
			27.4	NS		
			<5	NS	SILT (ML); olive gray (5Y 5/2), dry, hard, partially lithified to siltstone, with small calcite veins.	
		B-9(18)				
			<5	NS		
					Clayey SILT (ML); light gray (2.5Y 7/2) light gray, dry, hard, almost lithified, (70% silt, 30% clay).	
			<5	NS	Same material as above, with calcite veins.	
20					Bottom of Boring at 20.0' BGS.	20
25						25
30						30
35						35

Apex Companies, LLC
3015 SW First Avenue
Portland, Oregon 97201

Soil Investigation Report and Excavation Work Plan
NuStar Pipeline Operating Partnership L.P.
Andover, Kansas

Boring Number: **B-10**

Project Number: **1641-04**
Logged By: M. Whitson
Date: April 9, 2014
Site Conditions: Clear, Sunny, 70s (°F)
Drilling Contractor: Geocore
Drilling Equipment: SSA
Sampler Type: Split Spoon (24")
Depth to Water (ATD):
Surface Elevation: --

Depth, feet	Core Interval/Recovery	Laboratory Sample ID	PID	Sheen	Lithologic Description
		B-10(2)	<5	NS	Asphalt-concrete road surface over silty CLAY (CH); very dark gray (2.5Y 3/1); slightly moist, stiff, (60% clay, 40% silt).
			<5	NS	
		B-10(4)	<5	NS	Becomes dark brown (10YR 3/3).
5			<5	NS	Clayey SILT (ML); brownish yellow (10YR 6/6), slightly moist, soft to medium soft, (70% silt, 30% clay).
			<5	NS	
		B-10(10)	<5	NS	Becomes olive gray (5Y 5/2), hard.
			<5	NS	Same material as above with calcite veins <1-inch thick.
10			<5	NS	
			<5	NS	Becomes moist, calcite veins from 1 to 2 inches.
		B-10(14.5)	7.1	NS	
			20.7	NS	SILT with clay (ML); olive gray (5Y 5/2), dry, hard, partially lithified (siltstone).
15		B-10(16)	103.7	NS	
			<5	NS	Clayey SILT with gravel (ML); light yellowish brown (2.5Y 6/3), moist, soft, (45% silt, 30% clay, 15% angular fine gravel). Becomes very stiff, lenses of calcite.
			<5	NS	
		B-10(20)	<5	NS	Becomes slightly moist, soft.
20					Bottom of Boring at 25.0' BGS.
25					
30					
35					

Boring Details and Notes:

Apex Companies, LLC
3015 SW First Avenue
Portland, Oregon 97201

Soil Investigation Report and Excavation Work Plan
NuStar Pipeline Operating Partnership L.P.
Andover, Kansas

Boring Number: **B-11**

Project Number: **1641-04**
Logged By: M. Whitson
Date: April 8, 2014
Site Conditions: Partly Cloudy, 50s (°F)
Drilling Contractor: Geocore
Drilling Equipment: SSA
Sampler Type: Split Spoon (24")
Depth to Water (ATD):
Surface Elevation: --

Depth, feet	Core Interval/Recovery	Laboratory Sample ID	PID	Sheen	Lithologic Description	Boring Details and Notes:
					Asphalt concrete road surface.	
			<5	NS	Clayey SILT (MH); dark brown.	
			<5	NS	Very clayey SILT (MH); very dark grayish brown (10YR 3/2), slightly moist, stiff, (55% silt, 45% clay).	
5			<5	NS	Becomes pale olive (5Y 6/3).	5
					Becomes hard, fractures filled with calcite/iron.	
			<5	NS		
					Trace gravel from veins.	
		B-11 (10)	<5	NS	Becomes olive gray (5Y 5/2).	
10						10
			<5	NS	Increase in calcite veins, several <1-inch veins.	
					Becomes moist.	
		B-11 (15)				
			<5	NS		
			<5	NS	Gravelly silty CLAY (CH); light olive gray (5Y 6/2), moist, soft, (40% clay, 30% gravel, 30% silt, with calcite).	
15						15
			<5	NS	Clayey SILT, greenish gray (GLEY 1 5/5G), slightly moist, stiff to very stiff to hard.	
			<5	NS	Becomes pale olive (5Y 6/3), very hard, almost siltstone/mudstone.	
		B-11 (20)	<5	NS	Trace gravel and calcite veins, mottled brown and orange.	
20			23.1	NS	Becomes very hard.	20
					Bottom of Boring at 20.0' BGS.	
25						25
30						30
35						35

Apex Companies, LLC
3015 SW First Avenue
Portland, Oregon 97201

Soil Investigation Report and Excavation Work Plan
NuStar Pipeline Operating Partnership L.P.
Andover, Kansas

Boring Number: **B-12**

Project Number: **1641-04**
Logged By: M. Whitson
Date: April 10, 2014
Site Conditions: Clear, Calm, 60s (°F)
Drilling Contractor: Geocore
Drilling Equipment: SSA
Sampler Type: Split Spoon (24")
Depth to Water (ATD):
Surface Elevation: --

Depth, feet	Core Interval/Recovery	Laboratory Sample ID	PID	Sheen	Lithologic Description
					Concrete curb surface over SILT with clay (ML); light olive brown (2.5Y 5/4), slightly moist, medium stiff, (80-85% silt, 15-20% clay, trace gravel).
			<5	NS	
			<5	NS	
					Very clayey silt (MH), dark grayish brown (10YR 4/2), moist, stiff, (55% silt, 45% clay).
			<5	NS	
5			<5	NS	Clayey SILT (ML); yellow (10YR 7/8), moist, medium stiff, (70% silt, 30% clay).
			<5	NS	Becomes partially lithified.
		B-12(10)	<5	NS	SILT with clay (ML); yellow (2.5Y 7/6), slightly moist, stiff, (75-85% low plastic silt, 15-25% clay).
10					
			<5	NS	Clayey SILT (ML); pale olive (5Y 6/3), slightly moist, stiff to very stiff, lithified in small lenses.
		B-12(14)	<5	NS	Several small <1-inch veins of calcite.
			5.6	NS	Becomes moist, soft.
					Becomes stiff to very stiff.
15		B-12(15)	836.2	NS	
					Becomes hard.
		B-12(18)			<1-inch vein of gypsum or calcite.
			<5	NS	1.5-inch vein of calcite.
			<5	NS	Becomes soft, moist.
			<5	NS	Becomes orange brown mottled.
20					Bottom of Boring at 20.0' BGS.
25					
30					
35					

Boring Details and Notes:

Apex Companies, LLC
3015 SW First Avenue
Portland, Oregon 97201

Soil Investigation Report and Excavation Work Plan
NuStar Pipeline Operating Partnership L.P.
Andover, Kansas

Boring Number: **B-13**

Project Number: **1641-04**
Logged By: M. Whitson
Date: April 10, 2014
Site Conditions: Clear, 70s (°F)
Drilling Contractor: Geocore
Drilling Equipment: SSA
Sampler Type: Split Spoon (24")
Depth to Water (ATD):
Surface Elevation: --

Depth, feet	Core Interval/Recovery	Laboratory Sample ID	PID	Sheen	Lithologic Description	Boring Details and Notes
			<5	NS	Grass/ground cover/top soil over silty CLAY (CH); dark gray (5YR 4/1), moist, stiff, (60% clay, 40% silt).	
			<5	NS	Clayey SILT (MH); dark gray (7.5YR 4/1), moist to wet, medium stiff, (55-60% silt, 40-45% clay).	
5			<5	NS	Becomes partially lithified, very stiff, mottled gray/orange.	5
					Becomes grayish brown (2.5Y 5/2).	
					2-inch lens of fine sand.	
			<5	NS		
		B-13(10)	<5	NS	Becomes partially lithified.	
10						10
			<5	NS	SILT (ML); olive gray (5Y 5/2); slightly moist, very stiff, partially lithified.	
		B-13(13)	7.8	NS	Several small <1-cm calcite veins.	
					Becomes moist, trace gravel from veins.	
15			10.2	NS	6-Inch moist, soft lens.	15
			<5	NS	Becomes hard, siltstone; olive gray (5Y 5/2), small vein of calcite.	
		B-13(18)	8.1	NS		
			<5	NS	Becomes soft, moist.	
		B-13(19)	<5	NS	Becomes hard, calcite (crystaline) in veins.	
20			<5	NS		20
					Bottom of Boring at 20.0' BGS.	
25						25
30						30
35						35

Appendix B

Analytical Laboratory Reports and QA/QC Review

Appendix B — Laboratory Analytical Reports and Quality Assurance/Quality Control Results Summary

1.0 Introduction

This appendix documents the results of a quality assurance (QA) review of the analytical data for soil samples that were collected during environmental investigation activities that were performed in April 2014 at the Quail Crossing neighborhood (the Neighborhood) in Andover, Kansas (Site).

The data reviewed herein include data associated with soil samples collected from April 7 through 10, 2014. The samples were analyzed by ALS Environmental (ALS) of Houston, Texas.

The QA review outlines the applicable quality control criteria utilized during the data review process, as well as any deviations from those criteria. Examination and validation of the laboratory summary reports includes:

- Analytical methods;
- Reporting limits;
- Detection limits and estimated concentrations;
- Sample holding times;
- Custody records and sample receipt;
- Spikes, blanks, and surrogates; and
- Duplicates.

The QA review did not include a review of calibration or raw data. Section 2.0 lists the analytical methods used in sample analysis. Section 3.0 defines the QA terms used in this report. Section 4.0 provides the QA results for each sampling event.

2.0 Analytical Methods

2.1 Groundwater Analyses

Chemical analyses performed on soil samples consisted of the following:

- Volatile petroleum hydrocarbons as gasoline (GRO) by IA OA-1; and
- 1,2,4-Trimethylbenzene, 1,2-dichloroethane, 1,3,5-trimethylbenzene, 2-butanone, cyclohexane, isopropylbenzene methylcyclohexane BTEX (benzene, toluene, ethylbenzene, total xylenes), naphthalene, n-butylbenzene, n-propylbenzene by U.S. Environmental Protection Agency (EPA) Method SW846 8260.

Appendix B — Laboratory Analytical Reports and Quality Assurance/Quality Control Results Summary

3.0 Quality Assurance Objectives and Review Procedures

The general QA objectives for this project were to develop and implement procedures for obtaining, evaluating, and confirming the usability of environmental data of a specified quality. To collect such information, analytical data must have an appropriate degree of accuracy and reproducibility, samples collected must be representative of actual field conditions, and samples must be collected and analyzed using unbroken chain-of-custody (COC) procedures.

Reporting limits and analytical results were compared to action levels for each parameter in each media of concern. Precision, accuracy, representativeness, completeness, and comparability parameters used to indicate data quality are defined below.

Reporting Limits. Method reporting limits (MRLs) are set by the laboratory and are based on instrumentation abilities, sample matrix, and suggested MRLs by the EPA or the Kansas Department of Health and Environment (KDHE). In some cases, the MRLs are raised due to high concentrations of analytes in the samples or matrix interferences. MRLs are generally consistent with industry standards and below promulgated regulatory standards when possible.

Detection Limits and Estimated Concentrations. The method detection limit (MDL) is the lowest quantity of a substance that can be distinguished from the absence of that substance within a stated confidence limit. The MDL is estimated from the mean of the blank, the standard deviation of the blank and some confidence factor.

Holding Times. Holding times are the length of time a sample can be stored after collection and prior to analysis without significantly affecting the analytical results. Holding times vary by analyte, sample matrix, and analytical methodology.

Custody Records and Sample Receipt. COC refers to the document or paper trail showing the collection, custody, control, transfer, analysis, and disposition of physical materials. The sample receipt identifies the condition of samples upon arrival at the analytical laboratory.

Method Blanks. A method, or laboratory, blank is a sample prepared in the laboratory along with the field samples and analyzed for the same parameters at the same time. It is used to assess for laboratory introduced contamination.

Laboratory Control Sample. A laboratory control sample (LCS) is analyzed by the laboratory to assess the accuracy of the analytical equipment. The sample is prepared from an analyte-free matrix that is then spiked with known levels of the constituents of interest (i.e., a standard). The concentrations are measured and the results compared to the known spiked levels. This comparison is expressed as percent recovery.

Laboratory Control Sample Duplicate. A laboratory control sample duplicate (LCSD) is prepared and analyzed along with the LCS. The LCS and LCSD data are compared to assess the precision of the analytical method (i.e., the relative percent difference [RPD]).

Matrix Spike Analyses. Matrix spike (MS) analyses are performed on samples submitted to the laboratory that are of the same matrix as the field sample. The MS sample is spiked with known levels of the constituents of interest and analyzed to assess the potential for matrix interference with recovery or detection of the constituents of interest and the accuracy of the determination. The spiked sample results are compared to the expected result (i.e., sample concentration plus spike amount) and reported as percent recovery.

Lab Duplicate. A laboratory duplicate is a second analysis of a QA/QC sample, which serves as an internal check on laboratory quality as well as potential variability of the sample matrix. The laboratory duplicate is analyzed and compared to the primary sample results to assess the precision of the analytical method. This comparison can be expressed by the RPD between the primary and duplicate samples.

Surrogate Recovery. Surrogates are organic compounds that are similar in chemical composition to the analytes of interest and spiked into environmental and batch QC samples prior to sample preparation and analysis. Surrogate recoveries for environmental samples are used to evaluate matrix interference on a sample-specific basis.

Field Duplicate. A field duplicate is a second field sample collected from a sampling location (e.g., a well or soil core). Field duplicate samples serve as a check on laboratory quality as well as potential variability of the sample matrix. The field duplicate is analyzed and compared to the primary sample to assess the precision of the analytical method. This comparison can be expressed by the RPD between the original and duplicate samples.

Trip Blanks. A trip blank is a sample prepared in the laboratory that is shipped along with the sample bottles to the field, kept with the soil and groundwater samples during collection, and shipped back to the laboratory with the field samples. The trip blank is analyzed for constituents of interest, along with the primary samples, to assess if detected contaminants may have been the result of contamination of the samples during transport or storage.

Equipment Blank. An equipment blank is a sample collected in the field along with the primary samples and analyzed for the same parameters. Equipment blanks are collected by pouring deionized water over or through decontaminated equipment used to collect the samples, into laboratory supplied containers. The equipment blank is used to assess if field samples may have been affected by inadequate decontamination of field equipment.

4.0 QA/QC Review Results

4.9 Soil Lab Report HS14040491

The data reviewed includes soil sample data collected between April 7 and 10, 2014. Samples were analyzed for GRO and VOCs using the methods listed in Section 2.2.

Reporting Limits. MRLs were not elevated for samples. No data are flagged.

Detection Limits and Estimated Concentrations. MDLs and concentrations were not reported as estimates.

Holding Times. The samples were analyzed within applicable holding times.

Custody Records and Sample Receipt. The samples were received below the required temperature of 4°C and consistent with the accompanying COC.

Method Blanks. No compounds were detected in the method blanks. No data are flagged.

Laboratory Control Sample. Percent recoveries of the LCS were within control limits.

Laboratory Control Sample Duplicate. Percent recoveries of the LCSD were within control limits. LCS/LCSD RPDs were within control limits for reported constituents.

Matrix Spike Analyses. MS/MSD were within acceptable recovery and RPDs, with the following exceptions:

- Sample B-11(20) failed QC limits for 1,2,4-Trimethylbenzene due to possible matrix interference; and
- Sample B-7(4) failed QC limits for benzene, cyclohexane, and ethylbenzene due to possible matrix interference.

The LC and LCSD were used to provide batch quality control. No data are flagged.

Lab Duplicate. No lab duplicate was analyzed.

Surrogate Recovery. Surrogate recoveries were within control limits for samples, with the following exceptions:

- Samples B-6(9) and B-12(15) for GRO analysis due to sample matrix interference. The reported concentrations of both samples are well above the KDHE Tier 2 RBSVs.

Field Duplicate. No field duplicate was collected; however, KDHE collected split samples from B-5(15) and B-8(18.5). Concentrations reported in the split samples were within acceptable RPDs.

Trip Blank. No trip blank was analyzed; however, target compounds were not detected in seven samples.

Equipment Blank. No reusable equipment was utilized during this sampling event; therefore, an equipment blank was not collected.

Conclusion. In conclusion, the overall QA objectives have been met, and the data are of adequate quality for use in this project.

10450 Stancliff Rd. Suite 210
Houston, TX 77099
T: +1 281 530 5656
F: +1 281 530 5887
www.alsglobal.com

April 28, 2014

Samuel Jackson
Apex Companies
3015 SW First Avenue
Portland, OR 97201

Work Order: **HS14040491**

Laboratory Results for: **E3CE-0065 Andover Release Site**

Dear Samuel,

ALS Environmental received 71 sample(s) on Apr 11, 2014 for the analysis presented in the following report.

The analytical data provided relates directly to the samples received by ALS Environmental and for only the analyses requested. Results are expressed as "as received" unless otherwise noted.

QC sample results for this data met EPA or laboratory specifications except as noted in the Case Narrative or as noted with qualifiers in the QC batch information. Should this laboratory report need to be reproduced, it should be reproduced in full unless written approval has been obtained by ALS Environmental. Samples will be disposed in 30 days unless storage arrangements are made.

If you have any questions regarding this report, please feel free to call me.

Sincerely,

Generated By: bethany.McDaniel

Bethany McDaniel
Project Manager

Client: Apex Companies
Project: E3CE-0065 Andover Release Site
Work Order: HS14040491

SAMPLE SUMMARY

Lab Samp ID	Client Sample ID	Matrix	TagNo	Collection Date	Date Received	Hold
HS14040491-01	B-2(2-6)	Soil		07-Apr-2014 15:30	11-Apr-2014 09:25	☐
HS14040491-02	B-2(13)	Soil		07-Apr-2014 16:00	11-Apr-2014 09:25	☐
HS14040491-03	B-2(15.5)	Soil		07-Apr-2014 16:25	11-Apr-2014 09:25	☑
HS14040491-04	B-2(17)	Soil		07-Apr-2014 17:00	11-Apr-2014 09:25	☐
HS14040491-05	B-2(20)	Soil		07-Apr-2014 17:15	11-Apr-2014 09:25	☐
HS14040491-06	B-3 (5.0)	Soil		08-Apr-2014 09:25	11-Apr-2014 09:25	☐
HS14040491-07	B-3(9.5)	Soil		08-Apr-2014 09:40	11-Apr-2014 09:25	☑
HS14040491-08	B-3(11.0)	Soil		08-Apr-2014 10:00	11-Apr-2014 09:25	☐
HS14040491-09	B-3(17.5)	Soil		08-Apr-2014 10:30	11-Apr-2014 09:25	☑
HS14040491-10	B-3(20)	Soil		08-Apr-2014 10:40	11-Apr-2014 09:25	☐
HS14040491-11	B-4(4)	Soil		08-Apr-2014 11:05	11-Apr-2014 09:25	☐
HS14040491-12	B-4(9.5)	Soil		08-Apr-2014 11:30	11-Apr-2014 09:25	☑
HS14040491-13	B-4(14)	Soil		08-Apr-2014 11:55	11-Apr-2014 09:25	☐
HS14040491-14	B-4(15)	Soil		08-Apr-2014 12:05	11-Apr-2014 09:25	☑
HS14040491-15	B-4(16.5)	Soil		08-Apr-2014 12:25	11-Apr-2014 09:25	☐
HS14040491-16	B-4(20)	Soil		08-Apr-2014 12:45	11-Apr-2014 09:25	☐
HS14040491-17	B-5(5)	Soil		08-Apr-2014 13:15	11-Apr-2014 09:25	☐
HS14040491-18	B-5(10)	Soil		08-Apr-2014 13:40	11-Apr-2014 09:25	☑
HS14040491-19	B-5(11.5)	Soil		08-Apr-2014 13:50	11-Apr-2014 09:25	☐
HS14040491-20	B-5(15)	Soil		08-Apr-2014 14:25	11-Apr-2014 09:25	☐
HS14040491-21	B-5(18)	Soil		08-Apr-2014 15:00	11-Apr-2014 09:25	☑
HS14040491-22	B-5(21)	Soil		08-Apr-2014 15:15	11-Apr-2014 09:25	☑
HS14040491-23	B-5(24)	Soil		08-Apr-2014 15:30	11-Apr-2014 09:25	☐
HS14040491-24	B-8(5)	Soil		08-Apr-2014 16:20	11-Apr-2014 09:25	☑
HS14040491-25	B-8(10)	Soil		08-Apr-2014 16:30	11-Apr-2014 09:25	☐
HS14040491-26	B-8(15)	Soil		08-Apr-2014 17:00	11-Apr-2014 09:25	☐
HS14040491-27	B-8(17)	Soil		08-Apr-2014 17:40	11-Apr-2014 09:25	☑

HS14040491-28	B-8(18.5)	Soil	08-Apr-2014 17:25	11-Apr-2014 09:25	☐
HS14040491-29	B-6(2)	Soil	09-Apr-2014 09:00	11-Apr-2014 09:25	☑
HS14040491-30	B-6(4)	Soil	09-Apr-2014 09:05	11-Apr-2014 09:25	☐
HS14040491-31	B-6(9)	Soil	09-Apr-2014 09:20	11-Apr-2014 09:25	☐
HS14040491-32	B-6(15)	Soil	09-Apr-2014 09:45	11-Apr-2014 09:25	☐
HS14040491-33	B-6(18)	Soil	09-Apr-2014 10:00	11-Apr-2014 09:25	☑
HS14040491-34	B-6(20)	Soil	09-Apr-2014 10:10	11-Apr-2014 09:25	☐
HS14040491-35	B-7(2)	Soil	09-Apr-2014 10:45	11-Apr-2014 09:25	☑
HS14040491-36	B-7(4)	Soil	09-Apr-2014 10:50	11-Apr-2014 09:25	☐
HS14040491-37	B-7(10)	Soil	09-Apr-2014 11:10	11-Apr-2014 09:25	☑
HS14040491-38	B-7(11.5)	Soil	09-Apr-2014 11:20	11-Apr-2014 09:25	☐
HS14040491-39	B-7(15.5)	Soil	09-Apr-2014 11:35	11-Apr-2014 09:25	☐
HS14040491-40	B-7(19)	Soil	09-Apr-2014 12:00	11-Apr-2014 09:25	☐
HS14040491-41	B-9(5.5)	Soil	09-Apr-2014 13:40	11-Apr-2014 09:25	☑
HS14040491-42	B--9(10)	Soil	09-Apr-2014 13:50	11-Apr-2014 09:25	☐
HS14040491-43	B-9(15)	Soil	09-Apr-2014 14:05	11-Apr-2014 09:25	☐
HS14040491-44	B-9(18)	Soil	09-Apr-2014 14:20	11-Apr-2014 09:25	☐
HS14040491-45	B-10(2)	Soil	09-Apr-2014 15:10	11-Apr-2014 09:25	☑
HS14040491-46	B-10(4)	Soil	09-Apr-2014 15:15	11-Apr-2014 09:25	☐
HS14040491-47	B-10(10)	Soil	09-Apr-2014 15:40	11-Apr-2014 09:25	☐
HS14040491-48	B-10(14.5)	Soil	09-Apr-2014 16:00	11-Apr-2014 09:25	☐
HS14040491-49	B-10(16)	Soil	09-Apr-2014 16:05	11-Apr-2014 09:25	☑
HS14040491-50	B-10(20)	Soil	09-Apr-2014 16:20	11-Apr-2014 09:25	☐
HS14040491-51	B-11(5)	Soil	09-Apr-2014 16:55	11-Apr-2014 09:25	☑
HS14040491-52	B-11(10)	Soil	09-Apr-2014 17:05	11-Apr-2014 09:25	☐
HS14040491-53	B-11(14.5)	Soil	09-Apr-2014 17:25	11-Apr-2014 09:25	☐
HS14040491-54	B-11(20)	Soil	09-Apr-2014 17:40	11-Apr-2014 09:25	☐
HS14040491-55	B-12(5)	Soil	10-Apr-2014 08:55	11-Apr-2014 09:25	☑
HS14040491-56	B-12(10)	Soil	10-Apr-2014 09:10	11-Apr-2014 09:25	☐
HS14040491-57	B-12(14)	Soil	10-Apr-2014 09:30	11-Apr-2014 09:25	☑
HS14040491-58	B-12(15)	Soil	10-Apr-2014 09:45	11-Apr-2014 09:25	☐

HS14040491-59	B-12(18)	Soil	10-Apr-2014 10:00	11-Apr-2014 09:25	☐
HS14040491-60	B-13(5)	Soil	10-Apr-2014 10:45	11-Apr-2014 09:25	☑
HS14040491-61	B-13(10)	Soil	10-Apr-2014 11:15	11-Apr-2014 09:25	☐
HS14040491-62	B-13(13)	Soil	10-Apr-2014 11:30	11-Apr-2014 09:25	☐
HS14040491-63	B-13(18)	Soil	10-Apr-2014 11:55	11-Apr-2014 09:25	☑
HS14040491-64	B-13(19)	Soil	10-Apr-2014 12:00	11-Apr-2014 09:25	☐
HS14040491-65	Trip Blank-1	Water	07-Apr-2014 00:00	11-Apr-2014 09:25	☐
HS14040491-66	Trip Blank-2	Water	07-Apr-2014 00:00	11-Apr-2014 09:25	☐
HS14040491-67	Trip Blank-3	Water	07-Apr-2014 00:00	11-Apr-2014 09:25	☐
HS14040491-68	Trip Blank-4	Water	07-Apr-2014 00:00	11-Apr-2014 09:25	☐
HS14040491-69	Trip Blank-5	Water	07-Apr-2014 00:00	11-Apr-2014 09:25	☐
HS14040491-70	Trip Blank-6	Water	07-Apr-2014 00:00	11-Apr-2014 09:25	☐
HS14040491-71	Trip Blank-7	Water	07-Apr-2014 00:00	11-Apr-2014 09:25	☐

Client: Apex Companies
Project: E3CE-0065 Andover Release Site
Work Order: HS14040491

CASE NARRATIVE

Batch R232294, Method VPH OA-1, SampID HS14040491-31 and -58: Surrogate failure due tosample matrix interference.

Batch R231873, Method 8260, SampID HS14040547-01: MS/MSD performed on an unrelated sample.

Batch R231925, Method 8260, SampID HS14040491-36: MS/MSD failed QC limits due to possible matrix interference.

Batch R232109, Method 8260, SampID HS14040491-54: MS/MSD failed QC limits due to possible matrix interference.

Batch R232188, Method 8260, SampID HS14040806-03:MS/MSD performed on an unrelated sample.

Batch R232294, Method VPH OA-1, SampID HS14040529-08: MS/MSD performed on an unrelated sample.

ANALYTICAL REPORT

Client: Apex Companies
Project: E3CE-0065 Andover Release Site
Sample ID: B-2(2-6)
Collection Date: 07-Apr-2014 15:30

WorkOrder:HS14040491
Lab ID:HS14040491-01
Matrix:Soil

ANALYSES	RESULT	QUAL	REPORT LIMIT	UNITS	DILUTION FACTOR	DATE ANALYZED
VOLATILES - SW8260C		**Method:SW8260**				Analyst: WLR
1,2,4-Trimethylbenzene	ND		0.0042	mg/Kg	1	15-Apr-2014 22:17
1,2-Dichloroethane	ND		0.0042	mg/Kg	1	15-Apr-2014 22:17
1,3,5-Trimethylbenzene	ND		0.0042	mg/Kg	1	15-Apr-2014 22:17
2-Butanone	ND		0.0084	mg/Kg	1	15-Apr-2014 22:17
Benzene	ND		0.0042	mg/Kg	1	15-Apr-2014 22:17
Cyclohexane	**0.0054**		**0.0042**	**mg/Kg**	1	15-Apr-2014 22:17
Ethylbenzene	ND		0.0042	mg/Kg	1	15-Apr-2014 22:17
Isopropylbenzene	ND		0.0042	mg/Kg	1	15-Apr-2014 22:17
Methylcyclohexane	ND		0.0042	mg/Kg	1	15-Apr-2014 22:17
Naphthalene	ND		0.0042	mg/Kg	1	15-Apr-2014 22:17
n-Butylbenzene	ND		0.0042	mg/Kg	1	15-Apr-2014 22:17
n-Propylbenzene	ND		0.0042	mg/Kg	1	15-Apr-2014 22:17
Toluene	ND		0.0042	mg/Kg	1	15-Apr-2014 22:17
Xylenes, Total	ND		0.0084	mg/Kg	1	15-Apr-2014 22:17
Surr: 1,2-Dichloroethane-d4	*85.2*		*70-128*	*%REC*	*1*	*15-Apr-2014 22:17*
Surr: 4-Bromofluorobenzene	*99.4*		*73-126*	*%REC*	*1*	*15-Apr-2014 22:17*
Surr: Dibromofluoromethane	*102*		*71-128*	*%REC*	*1*	*15-Apr-2014 22:17*
Surr: Toluene-d8	*103*		*73-127*	*%REC*	*1*	*15-Apr-2014 22:17*
VPH - IOWA OA-1		**Method:IA OA-1**				Analyst: DNR
VPH - Gasoline Range Organics	**0.065**		**0.050**	**mg/Kg**	1	21-Apr-2014 12:40
Surr: 4-Bromofluorobenzene	*109*		*70-130*	*%REC*	*1*	*21-Apr-2014 12:40*

Note: See Qualifiers Page for a list of qualifiers and their explanation.

ANALYTICAL REPORT

Client: Apex Companies
Project: E3CE-0065 Andover Release Site
Sample ID: B-2(13)
Collection Date: 07-Apr-2014 16:00

WorkOrder:HS14040491
Lab ID:HS14040491-02
Matrix:Soil

ANALYSES	RESULT	QUAL	REPORT LIMIT	UNITS	DILUTION FACTOR	DATE ANALYZED
VOLATILES - SW8260C		**Method:SW8260**				Analyst: WLR
1,2,4-Trimethylbenzene	ND		0.0043	mg/Kg	1	15-Apr-2014 22:44
1,2-Dichloroethane	ND		0.0043	mg/Kg	1	15-Apr-2014 22:44
1,3,5-Trimethylbenzene	ND		0.0043	mg/Kg	1	15-Apr-2014 22:44
2-Butanone	ND		0.0087	mg/Kg	1	15-Apr-2014 22:44
Benzene	**0.16**		**0.0043**	**mg/Kg**	1	15-Apr-2014 22:44
Cyclohexane	**0.019**		**0.0043**	**mg/Kg**	1	15-Apr-2014 22:44
Ethylbenzene	**0.0073**		**0.0043**	**mg/Kg**	1	15-Apr-2014 22:44
Isopropylbenzene	ND		0.0043	mg/Kg	1	15-Apr-2014 22:44
Methylcyclohexane	ND		0.0043	mg/Kg	1	15-Apr-2014 22:44
Naphthalene	ND		0.0043	mg/Kg	1	15-Apr-2014 22:44
n-Butylbenzene	ND		0.0043	mg/Kg	1	15-Apr-2014 22:44
n-Propylbenzene	ND		0.0043	mg/Kg	1	15-Apr-2014 22:44
Toluene	**0.0068**		**0.0043**	**mg/Kg**	1	15-Apr-2014 22:44
Xylenes, Total	ND		0.0087	mg/Kg	1	15-Apr-2014 22:44
Surr: 1,2-Dichloroethane-d4	*92.7*		*70-128*	*%REC*	*1*	*15-Apr-2014 22:44*
Surr: 4-Bromofluorobenzene	*95.1*		*73-126*	*%REC*	*1*	*15-Apr-2014 22:44*
Surr: Dibromofluoromethane	*93.5*		*71-128*	*%REC*	*1*	*15-Apr-2014 22:44*
Surr: Toluene-d8	*102*		*73-127*	*%REC*	*1*	*15-Apr-2014 22:44*
VPH - IOWA OA-1		**Method:IA OA-1**				Analyst: DNR
VPH - Gasoline Range Organics	**1.0**		**0.050**	**mg/Kg**	1	21-Apr-2014 12:59
Surr: 4-Bromofluorobenzene	*112*		*70-130*	*%REC*	*1*	*21-Apr-2014 12:59*

Note: See Qualifiers Page for a list of qualifiers and their explanation.

ANALYTICAL REPORT

Client: Apex Companies
Project: E3CE-0065 Andover Release Site
Sample ID: B-2(17)
Collection Date: 07-Apr-2014 17:00

WorkOrder:HS14040491
Lab ID:HS14040491-04
Matrix:Soil

ANALYSES	RESULT	QUAL	REPORT LIMIT	UNITS	DILUTION FACTOR	DATE ANALYZED
VOLATILES - SW8260C		**Method:SW8260**				Analyst: WLR
1,2,4-Trimethylbenzene	**0.33**		**0.23**	**mg/Kg**	45.5	17-Apr-2014 14:52
1,2-Dichloroethane	ND		0.23	mg/Kg	45.5	17-Apr-2014 14:52
1,3,5-Trimethylbenzene	ND		0.23	mg/Kg	45.5	17-Apr-2014 14:52
2-Butanone	ND		0.46	mg/Kg	45.5	17-Apr-2014 14:52
Benzene	**2.4**		**0.23**	**mg/Kg**	45.5	17-Apr-2014 14:52
Cyclohexane	ND		0.23	mg/Kg	45.5	17-Apr-2014 14:52
Ethylbenzene	**0.28**		**0.23**	**mg/Kg**	45.5	17-Apr-2014 14:52
Isopropylbenzene	ND		0.23	mg/Kg	45.5	17-Apr-2014 14:52
Methylcyclohexane	ND		0.23	mg/Kg	45.5	17-Apr-2014 14:52
Naphthalene	**0.78**		**0.23**	**mg/Kg**	45.5	17-Apr-2014 14:52
n-Butylbenzene	ND		0.23	mg/Kg	45.5	17-Apr-2014 14:52
n-Propylbenzene	ND		0.23	mg/Kg	45.5	17-Apr-2014 14:52
Toluene	**1.7**		**0.23**	**mg/Kg**	45.5	17-Apr-2014 14:52
Xylenes, Total	**0.86**		**0.46**	**mg/Kg**	45.5	17-Apr-2014 14:52
Surr: 1,2-Dichloroethane-d4	*91.9*		*70-128*	*%REC*	*45.5*	*17-Apr-2014 14:52*
Surr: 4-Bromofluorobenzene	*96.5*		*73-126*	*%REC*	*45.5*	*17-Apr-2014 14:52*
Surr: Dibromofluoromethane	*97.3*		*71-128*	*%REC*	*45.5*	*17-Apr-2014 14:52*
Surr: Toluene-d8	*94.9*		*73-127*	*%REC*	*45.5*	*17-Apr-2014 14:52*
VPH - IOWA OA-1		**Method:IA OA-1**				Analyst: DNR
VPH - Gasoline Range Organics	**4.2**		**0.050**	**mg/Kg**	1	21-Apr-2014 13:18
Surr: 4-Bromofluorobenzene	*99.3*		*70-130*	*%REC*	*1*	*21-Apr-2014 13:18*

Note: See Qualifiers Page for a list of qualifiers and their explanation.

ANALYTICAL REPORT

Client: Apex Companies
Project: E3CE-0065 Andover Release Site
Sample ID: B-2(20)
Collection Date: 07-Apr-2014 17:15

WorkOrder:HS14040491
Lab ID:HS14040491-05
Matrix:Soil

ANALYSES	RESULT	QUAL	REPORT LIMIT	UNITS	DILUTION FACTOR	DATE ANALYZED
VOLATILES - SW8260C		**Method:SW8260**				Analyst: WLR
1,2,4-Trimethylbenzene	**2.3**		**0.47**	**mg/Kg**	94	17-Apr-2014 15:19
1,2-Dichloroethane	ND		0.47	mg/Kg	94	17-Apr-2014 15:19
1,3,5-Trimethylbenzene	**0.69**		**0.47**	**mg/Kg**	94	17-Apr-2014 15:19
2-Butanone	ND		0.94	mg/Kg	94	17-Apr-2014 15:19
Benzene	**4.8**		**0.47**	**mg/Kg**	94	17-Apr-2014 15:19
Cyclohexane	**1.4**		**0.47**	**mg/Kg**	94	17-Apr-2014 15:19
Ethylbenzene	**1.9**		**0.47**	**mg/Kg**	94	17-Apr-2014 15:19
Isopropylbenzene	ND		0.47	mg/Kg	94	17-Apr-2014 15:19
Methylcyclohexane	**0.65**		**0.47**	**mg/Kg**	94	17-Apr-2014 15:19
Naphthalene	ND		0.47	mg/Kg	94	17-Apr-2014 15:19
n-Butylbenzene	ND		0.47	mg/Kg	94	17-Apr-2014 15:19
n-Propylbenzene	ND		0.47	mg/Kg	94	17-Apr-2014 15:19
Toluene	**6.4**		**0.47**	**mg/Kg**	94	17-Apr-2014 15:19
Xylenes, Total	**5.7**		**0.94**	**mg/Kg**	94	17-Apr-2014 15:19
Surr: 1,2-Dichloroethane-d4	*98.8*		*70-128*	*%REC*	*94*	*17-Apr-2014 15:19*
Surr: 4-Bromofluorobenzene	*104*		*73-126*	*%REC*	*94*	*17-Apr-2014 15:19*
Surr: Dibromofluoromethane	*97.9*		*71-128*	*%REC*	*94*	*17-Apr-2014 15:19*
Surr: Toluene-d8	*105*		*73-127*	*%REC*	*94*	*17-Apr-2014 15:19*
VPH - IOWA OA-1		**Method:IA OA-1**				Analyst: DNR
VPH - Gasoline Range Organics	**8.8**		**0.050**	**mg/Kg**	1	21-Apr-2014 13:37
Surr: 4-Bromofluorobenzene	*96.8*		*70-130*	*%REC*	*1*	*21-Apr-2014 13:37*

Note: See Qualifiers Page for a list of qualifiers and their explanation.

ANALYTICAL REPORT

Client: Apex Companies
Project: E3CE-0065 Andover Release Site
Sample ID: B-3 (5.0)
Collection Date: 08-Apr-2014 09:25

WorkOrder:HS14040491
Lab ID:HS14040491-06
Matrix:Soil

ANALYSES	RESULT	QUAL	REPORT LIMIT	UNITS	DILUTION FACTOR	DATE ANALYZED
VOLATILES - SW8260C		**Method:SW8260**				Analyst: WLR
1,2,4-Trimethylbenzene	ND		0.0043	mg/Kg	1	15-Apr-2014 19:33
1,2-Dichloroethane	ND		0.0043	mg/Kg	1	15-Apr-2014 19:33
1,3,5-Trimethylbenzene	ND		0.0043	mg/Kg	1	15-Apr-2014 19:33
2-Butanone	ND		0.0087	mg/Kg	1	15-Apr-2014 19:33
Benzene	ND		0.0043	mg/Kg	1	15-Apr-2014 19:33
Cyclohexane	ND		0.0043	mg/Kg	1	15-Apr-2014 19:33
Ethylbenzene	ND		0.0043	mg/Kg	1	15-Apr-2014 19:33
Isopropylbenzene	ND		0.0043	mg/Kg	1	15-Apr-2014 19:33
Methylcyclohexane	ND		0.0043	mg/Kg	1	15-Apr-2014 19:33
Naphthalene	ND		0.0043	mg/Kg	1	15-Apr-2014 19:33
n-Butylbenzene	ND		0.0043	mg/Kg	1	15-Apr-2014 19:33
n-Propylbenzene	ND		0.0043	mg/Kg	1	15-Apr-2014 19:33
Toluene	ND		0.0043	mg/Kg	1	15-Apr-2014 19:33
Xylenes, Total	ND		0.0087	mg/Kg	1	15-Apr-2014 19:33
Surr: 1,2-Dichloroethane-d4	*94.2*		*70-128*	*%REC*	*1*	*15-Apr-2014 19:33*
Surr: 4-Bromofluorobenzene	*94.1*		*73-126*	*%REC*	*1*	*15-Apr-2014 19:33*
Surr: Dibromofluoromethane	*90.9*		*71-128*	*%REC*	*1*	*15-Apr-2014 19:33*
Surr: Toluene-d8	*94.9*		*73-127*	*%REC*	*1*	*15-Apr-2014 19:33*
VPH - IOWA OA-1		**Method:IA OA-1**				Analyst: DNR
VPH - Gasoline Range Organics	**0.36**		**0.050**	**mg/Kg**	1	21-Apr-2014 14:14
Surr: 4-Bromofluorobenzene	*107*		*70-130*	*%REC*	*1*	*21-Apr-2014 14:14*

Note: See Qualifiers Page for a list of qualifiers and their explanation.

ANALYTICAL REPORT

Client: Apex Companies
Project: E3CE-0065 Andover Release Site
Sample ID: B-3(11.0)
Collection Date: 08-Apr-2014 10:00

WorkOrder:HS14040491
Lab ID:HS14040491-08
Matrix:Soil

ANALYSES	RESULT	QUAL	REPORT LIMIT	UNITS	DILUTION FACTOR	DATE ANALYZED
VOLATILES - SW8260C		**Method:SW8260**				Analyst: WLR
1,2,4-Trimethylbenzene	**0.0063**		**0.0048**	**mg/Kg**	1	16-Apr-2014 23:38
1,2-Dichloroethane	ND		0.0048	mg/Kg	1	16-Apr-2014 23:38
1,3,5-Trimethylbenzene	ND		0.0048	mg/Kg	1	16-Apr-2014 23:38
2-Butanone	ND		0.0096	mg/Kg	1	16-Apr-2014 23:38
Benzene	**0.51**		**0.24**	**mg/Kg**	48	17-Apr-2014 17:07
Cyclohexane	**0.015**		**0.0048**	**mg/Kg**	1	16-Apr-2014 23:38
Ethylbenzene	**0.013**		**0.0048**	**mg/Kg**	1	16-Apr-2014 23:38
Isopropylbenzene	ND		0.0048	mg/Kg	1	16-Apr-2014 23:38
Methylcyclohexane	ND		0.0048	mg/Kg	1	16-Apr-2014 23:38
Naphthalene	ND		0.0048	mg/Kg	1	16-Apr-2014 23:38
n-Butylbenzene	ND		0.0048	mg/Kg	1	16-Apr-2014 23:38
n-Propylbenzene	ND		0.0048	mg/Kg	1	16-Apr-2014 23:38
Toluene	ND		0.0048	mg/Kg	1	16-Apr-2014 23:38
Xylenes, Total	**0.015**		**0.0096**	**mg/Kg**	1	16-Apr-2014 23:38
Surr: 1,2-Dichloroethane-d4	*105*		*70-128*	*%REC*	*1*	*16-Apr-2014 23:38*
Surr: 1,2-Dichloroethane-d4	*115*		*70-128*	*%REC*	*48*	*17-Apr-2014 17:07*
Surr: 4-Bromofluorobenzene	*109*		*73-126*	*%REC*	*1*	*16-Apr-2014 23:38*
Surr: 4-Bromofluorobenzene	*106*		*73-126*	*%REC*	*48*	*17-Apr-2014 17:07*
Surr: Dibromofluoromethane	*107*		*71-128*	*%REC*	*1*	*16-Apr-2014 23:38*
Surr: Dibromofluoromethane	*105*		*71-128*	*%REC*	*48*	*17-Apr-2014 17:07*
Surr: Toluene-d8	*113*		*73-127*	*%REC*	*1*	*16-Apr-2014 23:38*
Surr: Toluene-d8	*98.7*		*73-127*	*%REC*	*48*	*17-Apr-2014 17:07*
VPH - IOWA OA-1		**Method:IA OA-1**				Analyst: DNR
VPH - Gasoline Range Organics	ND		0.050	mg/Kg	1	21-Apr-2014 14:52
Surr: 4-Bromofluorobenzene	*94.8*		*70-130*	*%REC*	*1*	*21-Apr-2014 14:52*

Note: See Qualifiers Page for a list of qualifiers and their explanation.

ANALYTICAL REPORT

Client: Apex Companies
Project: E3CE-0065 Andover Release Site
Sample ID: B-3(20)
Collection Date: 08-Apr-2014 10:40

WorkOrder:HS14040491
Lab ID:HS14040491-10
Matrix:Soil

ANALYSES	RESULT	QUAL	REPORT LIMIT	UNITS	DILUTION FACTOR	DATE ANALYZED
VOLATILES - SW8260C		**Method:SW8260**				Analyst: WLR
1,2,4-Trimethylbenzene	**140**		**24**	**mg/Kg**	4900	17-Apr-2014 17:35
1,2-Dichloroethane	ND		24	mg/Kg	4900	17-Apr-2014 17:35
1,3,5-Trimethylbenzene	**48**		**24**	**mg/Kg**	4900	17-Apr-2014 17:35
2-Butanone	ND		49	mg/Kg	4900	17-Apr-2014 17:35
Benzene	**32**		**24**	**mg/Kg**	4900	17-Apr-2014 17:35
Cyclohexane	**75**		**24**	**mg/Kg**	4900	17-Apr-2014 17:35
Ethylbenzene	**110**		**24**	**mg/Kg**	4900	17-Apr-2014 17:35
Isopropylbenzene	ND		24	mg/Kg	4900	17-Apr-2014 17:35
Methylcyclohexane	**31**		**24**	**mg/Kg**	4900	17-Apr-2014 17:35
Naphthalene	ND		24	mg/Kg	4900	17-Apr-2014 17:35
n-Butylbenzene	ND		24	mg/Kg	4900	17-Apr-2014 17:35
n-Propylbenzene	**29**		**24**	**mg/Kg**	4900	17-Apr-2014 17:35
Toluene	**390**		**24**	**mg/Kg**	4900	17-Apr-2014 17:35
Xylenes, Total	**440**		**49**	**mg/Kg**	4900	17-Apr-2014 17:35
Surr: 1,2-Dichloroethane-d4	*110*		*70-128*	*%REC*	*4900*	*17-Apr-2014 17:35*
Surr: 4-Bromofluorobenzene	*109*		*73-126*	*%REC*	*4900*	*17-Apr-2014 17:35*
Surr: Dibromofluoromethane	*101*		*71-128*	*%REC*	*4900*	*17-Apr-2014 17:35*
Surr: Toluene-d8	*109*		*73-127*	*%REC*	*4900*	*17-Apr-2014 17:35*
VPH - IOWA OA-1		**Method:IA OA-1**				Analyst: DNR
VPH - Gasoline Range Organics	**4,100**		**50**	**mg/Kg**	1000	22-Apr-2014 18:53
Surr: 4-Bromofluorobenzene	*125*		*70-130*	*%REC*	*1000*	*22-Apr-2014 18:53*

Note: See Qualifiers Page for a list of qualifiers and their explanation.

ANALYTICAL REPORT

Client: Apex Companies
Project: E3CE-0065 Andover Release Site
Sample ID: B-4(4)
Collection Date: 08-Apr-2014 11:05

WorkOrder:HS14040491
Lab ID:HS14040491-11
Matrix:Soil

ANALYSES	RESULT	QUAL	REPORT LIMIT	UNITS	DILUTION FACTOR	DATE ANALYZED
VOLATILES - SW8260C		**Method:SW8260**				Analyst: WLR
1,2,4-Trimethylbenzene	ND		0.0050	mg/Kg	1	16-Apr-2014 03:03
1,2-Dichloroethane	ND		0.0050	mg/Kg	1	16-Apr-2014 03:03
1,3,5-Trimethylbenzene	ND		0.0050	mg/Kg	1	16-Apr-2014 03:03
2-Butanone	ND		0.010	mg/Kg	1	16-Apr-2014 03:03
Benzene	**0.0062**		**0.0050**	**mg/Kg**	1	16-Apr-2014 03:03
Cyclohexane	ND		0.0050	mg/Kg	1	16-Apr-2014 03:03
Ethylbenzene	ND		0.0050	mg/Kg	1	16-Apr-2014 03:03
Isopropylbenzene	ND		0.0050	mg/Kg	1	16-Apr-2014 03:03
Methylcyclohexane	ND		0.0050	mg/Kg	1	16-Apr-2014 03:03
Naphthalene	ND		0.0050	mg/Kg	1	16-Apr-2014 03:03
n-Butylbenzene	ND		0.0050	mg/Kg	1	16-Apr-2014 03:03
n-Propylbenzene	ND		0.0050	mg/Kg	1	16-Apr-2014 03:03
Toluene	ND		0.0050	mg/Kg	1	16-Apr-2014 03:03
Xylenes, Total	ND		0.010	mg/Kg	1	16-Apr-2014 03:03
Surr: 1,2-Dichloroethane-d4	*94.8*		*70-128*	*%REC*	*1*	*16-Apr-2014 03:03*
Surr: 4-Bromofluorobenzene	*94.3*		*73-126*	*%REC*	*1*	*16-Apr-2014 03:03*
Surr: Dibromofluoromethane	*93.3*		*71-128*	*%REC*	*1*	*16-Apr-2014 03:03*
Surr: Toluene-d8	*102*		*73-127*	*%REC*	*1*	*16-Apr-2014 03:03*
VPH - IOWA OA-1		**Method:IA OA-1**				Analyst: DNR
VPH - Gasoline Range Organics	**0.37**		**0.050**	**mg/Kg**	1	21-Apr-2014 15:11
Surr: 4-Bromofluorobenzene	*96.4*		*70-130*	*%REC*	*1*	*21-Apr-2014 15:11*

Note: See Qualifiers Page for a list of qualifiers and their explanation.

ANALYTICAL REPORT

Client: Apex Companies
Project: E3CE-0065 Andover Release Site
Sample ID: B-4(14)
Collection Date: 08-Apr-2014 11:55

WorkOrder:HS14040491
Lab ID:HS14040491-13
Matrix:Soil

ANALYSES	RESULT	QUAL	REPORT LIMIT	UNITS	DILUTION FACTOR	DATE ANALYZED
VOLATILES - SW8260C		**Method:SW8260**				Analyst: WLR
1,2,4-Trimethylbenzene	ND		0.0051	mg/Kg	1	15-Apr-2014 20:01
1,2-Dichloroethane	ND		0.0051	mg/Kg	1	15-Apr-2014 20:01
1,3,5-Trimethylbenzene	ND		0.0051	mg/Kg	1	15-Apr-2014 20:01
2-Butanone	**0.044**		**0.010**	**mg/Kg**	1	15-Apr-2014 20:01
Benzene	**0.023**		**0.0051**	**mg/Kg**	1	15-Apr-2014 20:01
Cyclohexane	**0.037**		**0.0051**	**mg/Kg**	1	15-Apr-2014 20:01
Ethylbenzene	ND		0.0051	mg/Kg	1	15-Apr-2014 20:01
Isopropylbenzene	ND		0.0051	mg/Kg	1	15-Apr-2014 20:01
Methylcyclohexane	**0.0077**		**0.0051**	**mg/Kg**	1	15-Apr-2014 20:01
Naphthalene	ND		0.0051	mg/Kg	1	15-Apr-2014 20:01
n-Butylbenzene	ND		0.0051	mg/Kg	1	15-Apr-2014 20:01
n-Propylbenzene	ND		0.0051	mg/Kg	1	15-Apr-2014 20:01
Toluene	ND		0.0051	mg/Kg	1	15-Apr-2014 20:01
Xylenes, Total	ND		0.010	mg/Kg	1	15-Apr-2014 20:01
Surr: 1,2-Dichloroethane-d4	*92.2*		*70-128*	*%REC*	*1*	*15-Apr-2014 20:01*
Surr: 4-Bromofluorobenzene	*88.0*		*73-126*	*%REC*	*1*	*15-Apr-2014 20:01*
Surr: Dibromofluoromethane	*126*		*71-128*	*%REC*	*1*	*15-Apr-2014 20:01*
Surr: Toluene-d8	*79.0*		*73-127*	*%REC*	*1*	*15-Apr-2014 20:01*
VPH - IOWA OA-1		**Method:IA OA-1**				Analyst: DNR
VPH - Gasoline Range Organics	ND		0.050	mg/Kg	1	21-Apr-2014 15:30
Surr: 4-Bromofluorobenzene	*92.1*		*70-130*	*%REC*	*1*	*21-Apr-2014 15:30*

Note: See Qualifiers Page for a list of qualifiers and their explanation.

ANALYTICAL REPORT

Client: Apex Companies
Project: E3CE-0065 Andover Release Site
Sample ID: B-4(16.5)
Collection Date: 08-Apr-2014 12:25

WorkOrder:HS14040491
Lab ID:HS14040491-15
Matrix:Soil

ANALYSES	RESULT	QUAL	REPORT LIMIT	UNITS	DILUTION FACTOR	DATE ANALYZED
VOLATILES - SW8260C		**Method:SW8260**				Analyst: WLR
1,2,4-Trimethylbenzene	**33**		**2.3**	**mg/Kg**	465	17-Apr-2014 18:02
1,2-Dichloroethane	ND		2.3	mg/Kg	465	17-Apr-2014 18:02
1,3,5-Trimethylbenzene	**12**		**2.3**	**mg/Kg**	465	17-Apr-2014 18:02
2-Butanone	ND		4.6	mg/Kg	465	17-Apr-2014 18:02
Benzene	ND		2.3	mg/Kg	465	17-Apr-2014 18:02
Cyclohexane	**12**		**2.3**	**mg/Kg**	465	17-Apr-2014 18:02
Ethylbenzene	**18**		**2.3**	**mg/Kg**	465	17-Apr-2014 18:02
Isopropylbenzene	ND		2.3	mg/Kg	465	17-Apr-2014 18:02
Methylcyclohexane	**6.2**		**2.3**	**mg/Kg**	465	17-Apr-2014 18:02
Naphthalene	**3.4**		**2.3**	**mg/Kg**	465	17-Apr-2014 18:02
n-Butylbenzene	ND		2.3	mg/Kg	465	17-Apr-2014 18:02
n-Propylbenzene	**7.3**		**2.3**	**mg/Kg**	465	17-Apr-2014 18:02
Toluene	**13**		**2.3**	**mg/Kg**	465	17-Apr-2014 18:02
Xylenes, Total	**48**		**4.6**	**mg/Kg**	465	17-Apr-2014 18:02
Surr: 1,2-Dichloroethane-d4	*99.0*		*70-128*	*%REC*	*465*	*17-Apr-2014 18:02*
Surr: 4-Bromofluorobenzene	*105*		*73-126*	*%REC*	*465*	*17-Apr-2014 18:02*
Surr: Dibromofluoromethane	*98.7*		*71-128*	*%REC*	*465*	*17-Apr-2014 18:02*
Surr: Toluene-d8	*100.0*		*73-127*	*%REC*	*465*	*17-Apr-2014 18:02*
VPH - IOWA OA-1		**Method:IA OA-1**				Analyst: DNR
VPH - Gasoline Range Organics	**700**		**5.0**	**mg/Kg**	100	21-Apr-2014 22:24
Surr: 4-Bromofluorobenzene	*128*		*70-130*	*%REC*	*100*	*21-Apr-2014 22:24*

Note: See Qualifiers Page for a list of qualifiers and their explanation.

ANALYTICAL REPORT

Client: Apex Companies
Project: E3CE-0065 Andover Release Site
Sample ID: B-4(20)
Collection Date: 08-Apr-2014 12:45

WorkOrder:HS14040491
Lab ID:HS14040491-16
Matrix:Soil

ANALYSES	RESULT	QUAL	REPORT LIMIT	UNITS	DILUTION FACTOR	DATE ANALYZED
VOLATILES - SW8260C		**Method:SW8260**				Analyst: WLR
1,2,4-Trimethylbenzene	**0.0078**		**0.0040**	**mg/Kg**	1	17-Apr-2014 02:21
1,2-Dichloroethane	ND		0.0040	mg/Kg	1	17-Apr-2014 02:21
1,3,5-Trimethylbenzene	ND		0.0040	mg/Kg	1	17-Apr-2014 02:21
2-Butanone	ND		0.0080	mg/Kg	1	17-Apr-2014 02:21
Benzene	**0.0090**		**0.0040**	**mg/Kg**	1	17-Apr-2014 02:21
Cyclohexane	**0.0051**		**0.0040**	**mg/Kg**	1	17-Apr-2014 02:21
Ethylbenzene	**0.0071**		**0.0040**	**mg/Kg**	1	17-Apr-2014 02:21
Isopropylbenzene	ND		0.0040	mg/Kg	1	17-Apr-2014 02:21
Methylcyclohexane	ND		0.0040	mg/Kg	1	17-Apr-2014 02:21
Naphthalene	ND		0.0040	mg/Kg	1	17-Apr-2014 02:21
n-Butylbenzene	ND		0.0040	mg/Kg	1	17-Apr-2014 02:21
n-Propylbenzene	ND		0.0040	mg/Kg	1	17-Apr-2014 02:21
Toluene	**0.012**		**0.0040**	**mg/Kg**	1	17-Apr-2014 02:21
Xylenes, Total	**0.021**		**0.0080**	**mg/Kg**	1	17-Apr-2014 02:21
Surr: 1,2-Dichloroethane-d4	*94.0*		*70-128*	*%REC*	*1*	*17-Apr-2014 02:21*
Surr: 4-Bromofluorobenzene	*94.9*		*73-126*	*%REC*	*1*	*17-Apr-2014 02:21*
Surr: Dibromofluoromethane	*95.5*		*71-128*	*%REC*	*1*	*17-Apr-2014 02:21*
Surr: Toluene-d8	*101*		*73-127*	*%REC*	*1*	*17-Apr-2014 02:21*
VPH - IOWA OA-1		**Method:IA OA-1**				Analyst: DNR
VPH - Gasoline Range Organics	ND		0.050	mg/Kg	1	21-Apr-2014 13:55
Surr: 4-Bromofluorobenzene	*107*		*70-130*	*%REC*	*1*	*21-Apr-2014 13:55*

Note: See Qualifiers Page for a list of qualifiers and their explanation.

ANALYTICAL REPORT

Client: Apex Companies
Project: E3CE-0065 Andover Release Site
Sample ID: B-5(5)
Collection Date: 08-Apr-2014 13:15

WorkOrder:HS14040491
Lab ID:HS14040491-17
Matrix:Soil

ANALYSES	RESULT	QUAL	REPORT LIMIT	UNITS	DILUTION FACTOR	DATE ANALYZED
VOLATILES - SW8260C		**Method:SW8260**				Analyst: WLR
1,2,4-Trimethylbenzene	ND		0.0040	mg/Kg	1	15-Apr-2014 20:29
1,2-Dichloroethane	ND		0.0040	mg/Kg	1	15-Apr-2014 20:29
1,3,5-Trimethylbenzene	ND		0.0040	mg/Kg	1	15-Apr-2014 20:29
2-Butanone	ND		0.0080	mg/Kg	1	15-Apr-2014 20:29
Benzene	ND		0.0040	mg/Kg	1	15-Apr-2014 20:29
Cyclohexane	ND		0.0040	mg/Kg	1	15-Apr-2014 20:29
Ethylbenzene	ND		0.0040	mg/Kg	1	15-Apr-2014 20:29
Isopropylbenzene	ND		0.0040	mg/Kg	1	15-Apr-2014 20:29
Methylcyclohexane	ND		0.0040	mg/Kg	1	15-Apr-2014 20:29
Naphthalene	ND		0.0040	mg/Kg	1	15-Apr-2014 20:29
n-Butylbenzene	ND		0.0040	mg/Kg	1	15-Apr-2014 20:29
n-Propylbenzene	ND		0.0040	mg/Kg	1	15-Apr-2014 20:29
Toluene	ND		0.0040	mg/Kg	1	15-Apr-2014 20:29
Xylenes, Total	ND		0.0080	mg/Kg	1	15-Apr-2014 20:29
Surr: 1,2-Dichloroethane-d4	*105*		*70-128*	*%REC*	*1*	*15-Apr-2014 20:29*
Surr: 4-Bromofluorobenzene	*107*		*73-126*	*%REC*	*1*	*15-Apr-2014 20:29*
Surr: Dibromofluoromethane	*92.3*		*71-128*	*%REC*	*1*	*15-Apr-2014 20:29*
Surr: Toluene-d8	*104*		*73-127*	*%REC*	*1*	*15-Apr-2014 20:29*
VPH - IOWA OA-1		**Method:IA OA-1**				Analyst: DNR
VPH - Gasoline Range Organics	ND		0.050	mg/Kg	1	21-Apr-2014 15:48
Surr: 4-Bromofluorobenzene	*91.8*		*70-130*	*%REC*	*1*	*21-Apr-2014 15:48*

Note: See Qualifiers Page for a list of qualifiers and their explanation.

ANALYTICAL REPORT

Client: Apex Companies
Project: E3CE-0065 Andover Release Site
Sample ID: B-5(11.5)
Collection Date: 08-Apr-2014 13:50

WorkOrder:HS14040491
Lab ID:HS14040491-19
Matrix:Soil

ANALYSES	RESULT	QUAL	REPORT LIMIT	UNITS	DILUTION FACTOR	DATE ANALYZED
VOLATILES - SW8260C		**Method:SW8260**				Analyst: WLR
1,2,4-Trimethylbenzene	**5.5**		**0.27**	**mg/Kg**	54	17-Apr-2014 19:49
1,2-Dichloroethane	ND		0.27	mg/Kg	54	17-Apr-2014 19:49
1,3,5-Trimethylbenzene	**2.4**		**0.27**	**mg/Kg**	54	17-Apr-2014 19:49
2-Butanone	ND		0.54	mg/Kg	54	17-Apr-2014 19:49
Benzene	ND		0.27	mg/Kg	54	17-Apr-2014 19:49
Cyclohexane	ND		0.27	mg/Kg	54	17-Apr-2014 19:49
Ethylbenzene	**0.74**		**0.27**	**mg/Kg**	54	17-Apr-2014 19:49
Isopropylbenzene	ND		0.27	mg/Kg	54	17-Apr-2014 19:49
Methylcyclohexane	**0.35**		**0.27**	**mg/Kg**	54	17-Apr-2014 19:49
Naphthalene	**0.97**		**0.27**	**mg/Kg**	54	17-Apr-2014 19:49
n-Butylbenzene	ND		0.27	mg/Kg	54	17-Apr-2014 19:49
n-Propylbenzene	**0.88**		**0.27**	**mg/Kg**	54	17-Apr-2014 19:49
Toluene	ND		0.27	mg/Kg	54	17-Apr-2014 19:49
Xylenes, Total	**1.3**		**0.54**	**mg/Kg**	54	17-Apr-2014 19:49
Surr: 1,2-Dichloroethane-d4	*117*		*70-128*	*%REC*	*54*	*17-Apr-2014 19:49*
Surr: 4-Bromofluorobenzene	*102*		*73-126*	*%REC*	*54*	*17-Apr-2014 19:49*
Surr: Dibromofluoromethane	*104*		*71-128*	*%REC*	*54*	*17-Apr-2014 19:49*
Surr: Toluene-d8	*103*		*73-127*	*%REC*	*54*	*17-Apr-2014 19:49*
VPH - IOWA OA-1		**Method:IA OA-1**				Analyst: DNR
VPH - Gasoline Range Organics	**64**		**5.0**	**mg/Kg**	100	21-Apr-2014 22:42
Surr: 4-Bromofluorobenzene	*107*		*70-130*	*%REC*	*100*	*21-Apr-2014 22:42*

Note: See Qualifiers Page for a list of qualifiers and their explanation.

ANALYTICAL REPORT

Client: Apex Companies
Project: E3CE-0065 Andover Release Site
Sample ID: B-5(15)
Collection Date: 08-Apr-2014 14:25

WorkOrder:HS14040491
Lab ID:HS14040491-20
Matrix:Soil

ANALYSES	RESULT	QUAL	REPORT LIMIT	UNITS	DILUTION FACTOR	DATE ANALYZED
VOLATILES - SW8260C		**Method:SW8260**				Analyst: WLR
1,2,4-Trimethylbenzene	**3.7**		**0.50**	**mg/Kg**	99	17-Apr-2014 20:16
1,2-Dichloroethane	ND		0.50	mg/Kg	99	17-Apr-2014 20:16
1,3,5-Trimethylbenzene	**1.1**		**0.50**	**mg/Kg**	99	17-Apr-2014 20:16
2-Butanone	ND		0.99	mg/Kg	99	17-Apr-2014 20:16
Benzene	**5.0**		**0.50**	**mg/Kg**	99	17-Apr-2014 20:16
Cyclohexane	**1.2**		**0.50**	**mg/Kg**	99	17-Apr-2014 20:16
Ethylbenzene	**3.2**		**0.50**	**mg/Kg**	99	17-Apr-2014 20:16
Isopropylbenzene	ND		0.50	mg/Kg	99	17-Apr-2014 20:16
Methylcyclohexane	ND		0.50	mg/Kg	99	17-Apr-2014 20:16
Naphthalene	**0.61**		**0.50**	**mg/Kg**	99	17-Apr-2014 20:16
n-Butylbenzene	ND		0.50	mg/Kg	99	17-Apr-2014 20:16
n-Propylbenzene	**0.53**		**0.50**	**mg/Kg**	99	17-Apr-2014 20:16
Toluene	**12**		**0.50**	**mg/Kg**	99	17-Apr-2014 20:16
Xylenes, Total	**11**		**0.99**	**mg/Kg**	99	17-Apr-2014 20:16
Surr: 1,2-Dichloroethane-d4	*114*		*70-128*	*%REC*	*99*	*17-Apr-2014 20:16*
Surr: 4-Bromofluorobenzene	*101*		*73-126*	*%REC*	*99*	*17-Apr-2014 20:16*
Surr: Dibromofluoromethane	*106*		*71-128*	*%REC*	*99*	*17-Apr-2014 20:16*
Surr: Toluene-d8	*107*		*73-127*	*%REC*	*99*	*17-Apr-2014 20:16*
VPH - IOWA OA-1		**Method:IA OA-1**				Analyst: DNR
VPH - Gasoline Range Organics	**86**		**5.0**	**mg/Kg**	100	21-Apr-2014 23:00
Surr: 4-Bromofluorobenzene	*109*		*70-130*	*%REC*	*100*	*21-Apr-2014 23:00*

Note: See Qualifiers Page for a list of qualifiers and their explanation.

ANALYTICAL REPORT

Client: Apex Companies
Project: E3CE-0065 Andover Release Site
Sample ID: B-5(24)
Collection Date: 08-Apr-2014 15:30

WorkOrder:HS14040491
Lab ID:HS14040491-23
Matrix:Soil

ANALYSES	RESULT	QUAL	REPORT LIMIT	UNITS	DILUTION FACTOR	DATE ANALYZED
VOLATILES - SW8260C		**Method:SW8260**				Analyst: WLR
1,2,4-Trimethylbenzene	**0.050**		**0.0055**	**mg/Kg**	1	15-Apr-2014 20:56
1,2-Dichloroethane	ND		0.0055	mg/Kg	1	15-Apr-2014 20:56
1,3,5-Trimethylbenzene	**0.015**		**0.0055**	**mg/Kg**	1	15-Apr-2014 20:56
2-Butanone	ND		0.011	mg/Kg	1	15-Apr-2014 20:56
Benzene	**0.045**		**0.0055**	**mg/Kg**	1	15-Apr-2014 20:56
Cyclohexane	**0.014**		**0.0055**	**mg/Kg**	1	15-Apr-2014 20:56
Ethylbenzene	**0.042**		**0.0055**	**mg/Kg**	1	15-Apr-2014 20:56
Isopropylbenzene	ND		0.0055	mg/Kg	1	15-Apr-2014 20:56
Methylcyclohexane	**0.0061**		**0.0055**	**mg/Kg**	1	15-Apr-2014 20:56
Naphthalene	**0.0076**		**0.0055**	**mg/Kg**	1	15-Apr-2014 20:56
n-Butylbenzene	ND		0.0055	mg/Kg	1	15-Apr-2014 20:56
n-Propylbenzene	**0.0069**		**0.0055**	**mg/Kg**	1	15-Apr-2014 20:56
Toluene	ND		0.0055	mg/Kg	1	15-Apr-2014 20:56
Xylenes, Total	**0.058**		**0.011**	**mg/Kg**	1	15-Apr-2014 20:56
Surr: 1,2-Dichloroethane-d4	*91.0*		*70-128*	*%REC*	*1*	*15-Apr-2014 20:56*
Surr: 4-Bromofluorobenzene	*110*		*73-126*	*%REC*	*1*	*15-Apr-2014 20:56*
Surr: Dibromofluoromethane	*101*		*71-128*	*%REC*	*1*	*15-Apr-2014 20:56*
Surr: Toluene-d8	*102*		*73-127*	*%REC*	*1*	*15-Apr-2014 20:56*
VPH - IOWA OA-1		**Method:IA OA-1**				Analyst: DNR
VPH - Gasoline Range Organics	**0.19**		**0.050**	**mg/Kg**	1	21-Apr-2014 16:19
Surr: 4-Bromofluorobenzene	*93.8*		*70-130*	*%REC*	*1*	*21-Apr-2014 16:19*

Note: See Qualifiers Page for a list of qualifiers and their explanation.

ANALYTICAL REPORT

Client: Apex Companies
Project: E3CE-0065 Andover Release Site
Sample ID: B-8(10)
Collection Date: 08-Apr-2014 16:30

WorkOrder:HS14040491
Lab ID:HS14040491-25
Matrix:Soil

ANALYSES	RESULT	QUAL	REPORT LIMIT	UNITS	DILUTION FACTOR	DATE ANALYZED
VOLATILES - SW8260C		**Method:SW8260**				Analyst: WLR
1,2,4-Trimethylbenzene	ND		0.0079	mg/Kg	1	15-Apr-2014 21:23
1,2-Dichloroethane	ND		0.0079	mg/Kg	1	15-Apr-2014 21:23
1,3,5-Trimethylbenzene	ND		0.0079	mg/Kg	1	15-Apr-2014 21:23
2-Butanone	ND		0.016	mg/Kg	1	15-Apr-2014 21:23
Benzene	ND		0.0079	mg/Kg	1	15-Apr-2014 21:23
Cyclohexane	ND		0.0079	mg/Kg	1	15-Apr-2014 21:23
Ethylbenzene	ND		0.0079	mg/Kg	1	15-Apr-2014 21:23
Isopropylbenzene	ND		0.0079	mg/Kg	1	15-Apr-2014 21:23
Methylcyclohexane	ND		0.0079	mg/Kg	1	15-Apr-2014 21:23
Naphthalene	ND		0.0079	mg/Kg	1	15-Apr-2014 21:23
n-Butylbenzene	ND		0.0079	mg/Kg	1	15-Apr-2014 21:23
n-Propylbenzene	ND		0.0079	mg/Kg	1	15-Apr-2014 21:23
Toluene	ND		0.0079	mg/Kg	1	15-Apr-2014 21:23
Xylenes, Total	ND		0.016	mg/Kg	1	15-Apr-2014 21:23
Surr: 1,2-Dichloroethane-d4	*82.1*		*70-128*	*%REC*	*1*	*15-Apr-2014 21:23*
Surr: 4-Bromofluorobenzene	*99.2*		*73-126*	*%REC*	*1*	*15-Apr-2014 21:23*
Surr: Dibromofluoromethane	*98.6*		*71-128*	*%REC*	*1*	*15-Apr-2014 21:23*
Surr: Toluene-d8	*108*		*73-127*	*%REC*	*1*	*15-Apr-2014 21:23*
VPH - IOWA OA-1		**Method:IA OA-1**				Analyst: DNR
VPH - Gasoline Range Organics	ND		0.050	mg/Kg	1	21-Apr-2014 16:45
Surr: 4-Bromofluorobenzene	*106*		*70-130*	*%REC*	*1*	*21-Apr-2014 16:45*

Note: See Qualifiers Page for a list of qualifiers and their explanation.

ANALYTICAL REPORT

Client: Apex Companies
Project: E3CE-0065 Andover Release Site
Sample ID: B-8(15)
Collection Date: 08-Apr-2014 17:00

WorkOrder:HS14040491
Lab ID:HS14040491-26
Matrix:Soil

ANALYSES	RESULT	QUAL	REPORT LIMIT	UNITS	DILUTION FACTOR	DATE ANALYZED
VOLATILES - SW8260C		**Method:SW8260**				Analyst: WLR
1,2,4-Trimethylbenzene	ND		0.0038	mg/Kg	1	15-Apr-2014 21:50
1,2-Dichloroethane	ND		0.0038	mg/Kg	1	15-Apr-2014 21:50
1,3,5-Trimethylbenzene	ND		0.0038	mg/Kg	1	15-Apr-2014 21:50
2-Butanone	ND		0.0077	mg/Kg	1	15-Apr-2014 21:50
Benzene	**0.021**		**0.0038**	**mg/Kg**	1	15-Apr-2014 21:50
Cyclohexane	**0.0063**		**0.0038**	**mg/Kg**	1	15-Apr-2014 21:50
Ethylbenzene	ND		0.0038	mg/Kg	1	15-Apr-2014 21:50
Isopropylbenzene	ND		0.0038	mg/Kg	1	15-Apr-2014 21:50
Methylcyclohexane	ND		0.0038	mg/Kg	1	15-Apr-2014 21:50
Naphthalene	ND		0.0038	mg/Kg	1	15-Apr-2014 21:50
n-Butylbenzene	ND		0.0038	mg/Kg	1	15-Apr-2014 21:50
n-Propylbenzene	ND		0.0038	mg/Kg	1	15-Apr-2014 21:50
Toluene	ND		0.0038	mg/Kg	1	15-Apr-2014 21:50
Xylenes, Total	ND		0.0077	mg/Kg	1	15-Apr-2014 21:50
Surr: 1,2-Dichloroethane-d4	*88.0*		*70-128*	*%REC*	*1*	*15-Apr-2014 21:50*
Surr: 4-Bromofluorobenzene	*103*		*73-126*	*%REC*	*1*	*15-Apr-2014 21:50*
Surr: Dibromofluoromethane	*103*		*71-128*	*%REC*	*1*	*15-Apr-2014 21:50*
Surr: Toluene-d8	*108*		*73-127*	*%REC*	*1*	*15-Apr-2014 21:50*
VPH - IOWA OA-1		**Method:IA OA-1**				Analyst: DNR
VPH - Gasoline Range Organics	**0.24**		**0.050**	**mg/Kg**	1	21-Apr-2014 17:04
Surr: 4-Bromofluorobenzene	*101*		*70-130*	*%REC*	*1*	*21-Apr-2014 17:04*

Note: See Qualifiers Page for a list of qualifiers and their explanation.

ANALYTICAL REPORT

Client: Apex Companies
Project: E3CE-0065 Andover Release Site
Sample ID: B-8(18.5)
Collection Date: 08-Apr-2014 17:25

WorkOrder:HS14040491
Lab ID:HS14040491-28
Matrix:Soil

ANALYSES	RESULT	QUAL	REPORT LIMIT	UNITS	DILUTION FACTOR	DATE ANALYZED
VOLATILES - SW8260C		**Method:SW8260**				Analyst: WLR
1,2,4-Trimethylbenzene	**17**		**0.57**	**mg/Kg**	114	17-Apr-2014 18:29
1,2-Dichloroethane	ND		0.57	mg/Kg	114	17-Apr-2014 18:29
1,3,5-Trimethylbenzene	**5.8**		**0.57**	**mg/Kg**	114	17-Apr-2014 18:29
2-Butanone	ND		1.1	mg/Kg	114	17-Apr-2014 18:29
Benzene	**2.9**		**0.57**	**mg/Kg**	114	17-Apr-2014 18:29
Cyclohexane	**7.9**		**0.57**	**mg/Kg**	114	17-Apr-2014 18:29
Ethylbenzene	**8.8**		**0.57**	**mg/Kg**	114	17-Apr-2014 18:29
Isopropylbenzene	**0.82**		**0.57**	**mg/Kg**	114	17-Apr-2014 18:29
Methylcyclohexane	**3.3**		**0.57**	**mg/Kg**	114	17-Apr-2014 18:29
Naphthalene	**1.2**		**0.57**	**mg/Kg**	114	17-Apr-2014 18:29
n-Butylbenzene	ND		0.57	mg/Kg	114	17-Apr-2014 18:29
n-Propylbenzene	**3.7**		**0.57**	**mg/Kg**	114	17-Apr-2014 18:29
Toluene	**13**		**0.57**	**mg/Kg**	114	17-Apr-2014 18:29
Xylenes, Total	**30**		**1.1**	**mg/Kg**	114	17-Apr-2014 18:29
Surr: 1,2-Dichloroethane-d4	*107*		*70-128*	*%REC*	*114*	*17-Apr-2014 18:29*
Surr: 4-Bromofluorobenzene	*108*		*73-126*	*%REC*	*114*	*17-Apr-2014 18:29*
Surr: Dibromofluoromethane	*93.0*		*71-128*	*%REC*	*114*	*17-Apr-2014 18:29*
Surr: Toluene-d8	*107*		*73-127*	*%REC*	*114*	*17-Apr-2014 18:29*
VPH - IOWA OA-1		**Method:IA OA-1**				Analyst: DNR
VPH - Gasoline Range Organics	**300**		**5.0**	**mg/Kg**	100	21-Apr-2014 23:18
Surr: 4-Bromofluorobenzene	*84.5*		*70-130*	*%REC*	*100*	*21-Apr-2014 23:18*

Note: See Qualifiers Page for a list of qualifiers and their explanation.

ANALYTICAL REPORT

Client: Apex Companies
Project: E3CE-0065 Andover Release Site
Sample ID: B-6(4)
Collection Date: 09-Apr-2014 09:05

WorkOrder:HS14040491
Lab ID:HS14040491-30
Matrix:Soil

ANALYSES	RESULT	QUAL	REPORT LIMIT	UNITS	DILUTION FACTOR	DATE ANALYZED
VOLATILES - SW8260C		**Method:SW8260**				Analyst: WLR
1,2,4-Trimethylbenzene	**0.028**		**0.0048**	**mg/Kg**	1	17-Apr-2014 00:24
1,2-Dichloroethane	ND		0.0048	mg/Kg	1	17-Apr-2014 00:24
1,3,5-Trimethylbenzene	**0.0073**		**0.0048**	**mg/Kg**	1	17-Apr-2014 00:24
2-Butanone	ND		0.0096	mg/Kg	1	17-Apr-2014 00:24
Benzene	**1.2**		**0.24**	**mg/Kg**	49	18-Apr-2014 14:32
Cyclohexane	**0.0064**		**0.0048**	**mg/Kg**	1	17-Apr-2014 00:24
Ethylbenzene	ND		0.0048	mg/Kg	1	17-Apr-2014 00:24
Isopropylbenzene	ND		0.0048	mg/Kg	1	17-Apr-2014 00:24
Methylcyclohexane	ND		0.0048	mg/Kg	1	17-Apr-2014 00:24
Naphthalene	ND		0.0048	mg/Kg	1	17-Apr-2014 00:24
n-Butylbenzene	ND		0.0048	mg/Kg	1	17-Apr-2014 00:24
n-Propylbenzene	ND		0.0048	mg/Kg	1	17-Apr-2014 00:24
Toluene	ND		0.0048	mg/Kg	1	17-Apr-2014 00:24
Xylenes, Total	**0.038**		**0.0096**	**mg/Kg**	1	17-Apr-2014 00:24
Surr: 1,2-Dichloroethane-d4	*92.2*		*70-128*	*%REC*	*1*	*17-Apr-2014 00:24*
Surr: 1,2-Dichloroethane-d4	*110*		*70-128*	*%REC*	*49*	*18-Apr-2014 14:32*
Surr: 4-Bromofluorobenzene	*95.8*		*73-126*	*%REC*	*1*	*17-Apr-2014 00:24*
Surr: 4-Bromofluorobenzene	*101*		*73-126*	*%REC*	*49*	*18-Apr-2014 14:32*
Surr: Dibromofluoromethane	*92.0*		*71-128*	*%REC*	*1*	*17-Apr-2014 00:24*
Surr: Dibromofluoromethane	*107*		*71-128*	*%REC*	*49*	*18-Apr-2014 14:32*
Surr: Toluene-d8	*103*		*73-127*	*%REC*	*1*	*17-Apr-2014 00:24*
Surr: Toluene-d8	*103*		*73-127*	*%REC*	*49*	*18-Apr-2014 14:32*
VPH - IOWA OA-1		**Method:IA OA-1**				Analyst: DNR
VPH - Gasoline Range Organics	**0.65**		**0.050**	**mg/Kg**	1	21-Apr-2014 17:23
Surr: 4-Bromofluorobenzene	*98.4*		*70-130*	*%REC*	*1*	*21-Apr-2014 17:23*

Note: See Qualifiers Page for a list of qualifiers and their explanation.

ANALYTICAL REPORT

Client: Apex Companies
Project: E3CE-0065 Andover Release Site
Sample ID: B-6(9)
Collection Date: 09-Apr-2014 09:20

WorkOrder:HS14040491
Lab ID:HS14040491-31
Matrix:Soil

ANALYSES	RESULT	QUAL	REPORT LIMIT	UNITS	DILUTION FACTOR	DATE ANALYZED
VOLATILES - SW8260C		**Method:SW8260**				Analyst: WLR
1,2,4-Trimethylbenzene	**190**		**4.8**	**mg/Kg**	950	17-Apr-2014 18:55
1,2-Dichloroethane	ND		4.8	mg/Kg	950	17-Apr-2014 18:55
1,3,5-Trimethylbenzene	**63**		**4.8**	**mg/Kg**	950	17-Apr-2014 18:55
2-Butanone	ND		9.5	mg/Kg	950	17-Apr-2014 18:55
Benzene	ND		4.8	mg/Kg	950	17-Apr-2014 18:55
Cyclohexane	**9.9**		**4.8**	**mg/Kg**	950	17-Apr-2014 18:55
Ethylbenzene	**53**		**4.8**	**mg/Kg**	950	17-Apr-2014 18:55
Isopropylbenzene	**5.1**		**4.8**	**mg/Kg**	950	17-Apr-2014 18:55
Methylcyclohexane	**9.5**		**4.8**	**mg/Kg**	950	17-Apr-2014 18:55
Naphthalene	**27**		**4.8**	**mg/Kg**	950	17-Apr-2014 18:55
n-Butylbenzene	ND		4.8	mg/Kg	950	17-Apr-2014 18:55
n-Propylbenzene	**24**		**4.8**	**mg/Kg**	950	17-Apr-2014 18:55
Toluene	**110**		**4.8**	**mg/Kg**	950	17-Apr-2014 18:55
Xylenes, Total	**320**		**9.5**	**mg/Kg**	950	17-Apr-2014 18:55
Surr: 1,2-Dichloroethane-d4	*114*		*70-128*	*%REC*	*950*	*17-Apr-2014 18:55*
Surr: 4-Bromofluorobenzene	*107*		*73-126*	*%REC*	*950*	*17-Apr-2014 18:55*
Surr: Dibromofluoromethane	*104*		*71-128*	*%REC*	*950*	*17-Apr-2014 18:55*
Surr: Toluene-d8	*106*		*73-127*	*%REC*	*950*	*17-Apr-2014 18:55*
VPH - IOWA OA-1		**Method:IA OA-1**				Analyst: DNR
VPH - Gasoline Range Organics	**2,000**		**5.0**	**mg/Kg**	100	21-Apr-2014 23:55
Surr: 4-Bromofluorobenzene	*191*	*S*	*70-130*	*%REC*	*100*	*21-Apr-2014 23:55*

Note: See Qualifiers Page for a list of qualifiers and their explanation.

ANALYTICAL REPORT

Client: Apex Companies
Project: E3CE-0065 Andover Release Site
Sample ID: B-6(15)
Collection Date: 09-Apr-2014 09:45

WorkOrder:HS14040491
Lab ID:HS14040491-32
Matrix:Soil

ANALYSES	RESULT	QUAL	REPORT LIMIT	UNITS	DILUTION FACTOR	DATE ANALYZED
VOLATILES - SW8260C		**Method:SW8260**				Analyst: WLR
1,2,4-Trimethylbenzene	**22**		**2.8**	**mg/Kg**	570	17-Apr-2014 19:22
1,2-Dichloroethane	ND		2.8	mg/Kg	570	17-Apr-2014 19:22
1,3,5-Trimethylbenzene	**7.1**		**2.8**	**mg/Kg**	570	17-Apr-2014 19:22
2-Butanone	ND		5.7	mg/Kg	570	17-Apr-2014 19:22
Benzene	**7.8**		**2.8**	**mg/Kg**	570	17-Apr-2014 19:22
Cyclohexane	**8.1**		**2.8**	**mg/Kg**	570	17-Apr-2014 19:22
Ethylbenzene	**17**		**2.8**	**mg/Kg**	570	17-Apr-2014 19:22
Isopropylbenzene	ND		2.8	mg/Kg	570	17-Apr-2014 19:22
Methylcyclohexane	**4.0**		**2.8**	**mg/Kg**	570	17-Apr-2014 19:22
Naphthalene	ND		2.8	mg/Kg	570	17-Apr-2014 19:22
n-Butylbenzene	ND		2.8	mg/Kg	570	17-Apr-2014 19:22
n-Propylbenzene	**4.2**		**2.8**	**mg/Kg**	570	17-Apr-2014 19:22
Toluene	**70**		**2.8**	**mg/Kg**	570	17-Apr-2014 19:22
Xylenes, Total	**74**		**5.7**	**mg/Kg**	570	17-Apr-2014 19:22
Surr: 1,2-Dichloroethane-d4	*117*		*70-128*	*%REC*	*570*	*17-Apr-2014 19:22*
Surr: 4-Bromofluorobenzene	*112*		*73-126*	*%REC*	*570*	*17-Apr-2014 19:22*
Surr: Dibromofluoromethane	*105*		*71-128*	*%REC*	*570*	*17-Apr-2014 19:22*
Surr: Toluene-d8	*111*		*73-127*	*%REC*	*570*	*17-Apr-2014 19:22*
VPH - IOWA OA-1		**Method:IA OA-1**				Analyst: DNR
VPH - Gasoline Range Organics	**630**		**5.0**	**mg/Kg**	100	22-Apr-2014 00:13
Surr: 4-Bromofluorobenzene	*123*		*70-130*	*%REC*	*100*	*22-Apr-2014 00:13*

Note: See Qualifiers Page for a list of qualifiers and their explanation.

ANALYTICAL REPORT

Client: Apex Companies
Project: E3CE-0065 Andover Release Site
Sample ID: B-6(20)
Collection Date: 09-Apr-2014 10:10

WorkOrder:HS14040491
Lab ID:HS14040491-34
Matrix:Soil

ANALYSES	RESULT	QUAL	REPORT LIMIT	UNITS	DILUTION FACTOR	DATE ANALYZED
VOLATILES - SW8260C		**Method:SW8260**				Analyst: WLR
1,2,4-Trimethylbenzene	**8.1**		**2.4**	**mg/Kg**	490	17-Apr-2014 20:44
1,2-Dichloroethane	ND		2.4	mg/Kg	490	17-Apr-2014 20:44
1,3,5-Trimethylbenzene	**2.5**		**2.4**	**mg/Kg**	490	17-Apr-2014 20:44
2-Butanone	ND		4.9	mg/Kg	490	17-Apr-2014 20:44
Benzene	**6.0**		**2.4**	**mg/Kg**	490	17-Apr-2014 20:44
Cyclohexane	**4.1**		**2.4**	**mg/Kg**	490	17-Apr-2014 20:44
Ethylbenzene	**6.5**		**2.4**	**mg/Kg**	490	17-Apr-2014 20:44
Isopropylbenzene	ND		2.4	mg/Kg	490	17-Apr-2014 20:44
Methylcyclohexane	ND		2.4	mg/Kg	490	17-Apr-2014 20:44
Naphthalene	ND		2.4	mg/Kg	490	17-Apr-2014 20:44
n-Butylbenzene	ND		2.4	mg/Kg	490	17-Apr-2014 20:44
n-Propylbenzene	ND		2.4	mg/Kg	490	17-Apr-2014 20:44
Toluene	**27**		**2.4**	**mg/Kg**	490	17-Apr-2014 20:44
Xylenes, Total	**25**		**4.9**	**mg/Kg**	490	17-Apr-2014 20:44
Surr: 1,2-Dichloroethane-d4	*116*		*70-128*	*%REC*	*490*	*17-Apr-2014 20:44*
Surr: 4-Bromofluorobenzene	*96.6*		*73-126*	*%REC*	*490*	*17-Apr-2014 20:44*
Surr: Dibromofluoromethane	*105*		*71-128*	*%REC*	*490*	*17-Apr-2014 20:44*
Surr: Toluene-d8	*98.9*		*73-127*	*%REC*	*490*	*17-Apr-2014 20:44*
VPH - IOWA OA-1		**Method:IA OA-1**				Analyst: DNR
VPH - Gasoline Range Organics	**200**		**5.0**	**mg/Kg**	100	22-Apr-2014 19:09
Surr: 4-Bromofluorobenzene	*106*		*70-130*	*%REC*	*100*	*22-Apr-2014 19:09*

Note: See Qualifiers Page for a list of qualifiers and their explanation.

ANALYTICAL REPORT

Client: Apex Companies
Project: E3CE-0065 Andover Release Site
Sample ID: B-7(4)
Collection Date: 09-Apr-2014 10:50

WorkOrder:HS14040491
Lab ID:HS14040491-36
Matrix:Soil

ANALYSES	RESULT	QUAL	REPORT LIMIT	UNITS	DILUTION FACTOR	DATE ANALYZED
VOLATILES - SW8260C		**Method:SW8260**				Analyst: WLR
1,2,4-Trimethylbenzene	ND		0.0043	mg/Kg	1	15-Apr-2014 21:38
1,2-Dichloroethane	ND		0.0043	mg/Kg	1	15-Apr-2014 21:38
1,3,5-Trimethylbenzene	ND		0.0043	mg/Kg	1	15-Apr-2014 21:38
2-Butanone	ND		0.0086	mg/Kg	1	15-Apr-2014 21:38
Benzene	**0.15**		**0.0043**	**mg/Kg**	1	15-Apr-2014 21:38
Cyclohexane	**0.017**		**0.0043**	**mg/Kg**	1	15-Apr-2014 21:38
Ethylbenzene	**0.0072**		**0.0043**	**mg/Kg**	1	15-Apr-2014 21:38
Isopropylbenzene	ND		0.0043	mg/Kg	1	15-Apr-2014 21:38
Methylcyclohexane	ND		0.0043	mg/Kg	1	15-Apr-2014 21:38
Naphthalene	ND		0.0043	mg/Kg	1	15-Apr-2014 21:38
n-Butylbenzene	ND		0.0043	mg/Kg	1	15-Apr-2014 21:38
n-Propylbenzene	ND		0.0043	mg/Kg	1	15-Apr-2014 21:38
Toluene	**0.0082**		**0.0043**	**mg/Kg**	1	15-Apr-2014 21:38
Xylenes, Total	**0.014**		**0.0086**	**mg/Kg**	1	15-Apr-2014 21:38
Surr: 1,2-Dichloroethane-d4	*93.4*		*70-128*	*%REC*	*1*	*15-Apr-2014 21:38*
Surr: 4-Bromofluorobenzene	*91.2*		*73-126*	*%REC*	*1*	*15-Apr-2014 21:38*
Surr: Dibromofluoromethane	*95.9*		*71-128*	*%REC*	*1*	*15-Apr-2014 21:38*
Surr: Toluene-d8	*103*		*73-127*	*%REC*	*1*	*15-Apr-2014 21:38*
VPH - IOWA OA-1		**Method:IA OA-1**				Analyst: DNR
VPH - Gasoline Range Organics	**0.68**		**0.050**	**mg/Kg**	1	21-Apr-2014 18:00
Surr: 4-Bromofluorobenzene	*87.2*		*70-130*	*%REC*	*1*	*21-Apr-2014 18:00*

Note: See Qualifiers Page for a list of qualifiers and their explanation.

ANALYTICAL REPORT

Client: Apex Companies
Project: E3CE-0065 Andover Release Site
Sample ID: B-7(11.5)
Collection Date: 09-Apr-2014 11:20

WorkOrder:HS14040491
Lab ID:HS14040491-38
Matrix:Soil

ANALYSES	RESULT	QUAL	REPORT LIMIT	UNITS	DILUTION FACTOR	DATE ANALYZED
VOLATILES - SW8260C		**Method:SW8260**				Analyst: WLR
1,2,4-Trimethylbenzene	**25**		**4.9**	**mg/Kg**	980	17-Apr-2014 21:11
1,2-Dichloroethane	ND		4.9	mg/Kg	980	17-Apr-2014 21:11
1,3,5-Trimethylbenzene	**8.4**		**4.9**	**mg/Kg**	980	17-Apr-2014 21:11
2-Butanone	ND		9.8	mg/Kg	980	17-Apr-2014 21:11
Benzene	**5.4**		**4.9**	**mg/Kg**	980	17-Apr-2014 21:11
Cyclohexane	**8.1**		**4.9**	**mg/Kg**	980	17-Apr-2014 21:11
Ethylbenzene	**20**		**4.9**	**mg/Kg**	980	17-Apr-2014 21:11
Isopropylbenzene	ND		4.9	mg/Kg	980	17-Apr-2014 21:11
Methylcyclohexane	ND		4.9	mg/Kg	980	17-Apr-2014 21:11
Naphthalene	ND		4.9	mg/Kg	980	17-Apr-2014 21:11
n-Butylbenzene	ND		4.9	mg/Kg	980	17-Apr-2014 21:11
n-Propylbenzene	ND		4.9	mg/Kg	980	17-Apr-2014 21:11
Toluene	**59**		**4.9**	**mg/Kg**	980	17-Apr-2014 21:11
Xylenes, Total	**73**		**9.8**	**mg/Kg**	980	17-Apr-2014 21:11
Surr: 1,2-Dichloroethane-d4	*114*		*70-128*	*%REC*	*980*	*17-Apr-2014 21:11*
Surr: 4-Bromofluorobenzene	*96.2*		*73-126*	*%REC*	*980*	*17-Apr-2014 21:11*
Surr: Dibromofluoromethane	*103*		*71-128*	*%REC*	*980*	*17-Apr-2014 21:11*
Surr: Toluene-d8	*101*		*73-127*	*%REC*	*980*	*17-Apr-2014 21:11*
VPH - IOWA OA-1		**Method:IA OA-1**				Analyst: DNR
VPH - Gasoline Range Organics	**810**		**5.0**	**mg/Kg**	100	22-Apr-2014 21:16
Surr: 4-Bromofluorobenzene	*125*		*70-130*	*%REC*	*100*	*22-Apr-2014 21:16*

Note: See Qualifiers Page for a list of qualifiers and their explanation.

ANALYTICAL REPORT

Client: Apex Companies
Project: E3CE-0065 Andover Release Site
Sample ID: B-7(15.5)
Collection Date: 09-Apr-2014 11:35

WorkOrder:HS14040491
Lab ID:HS14040491-39
Matrix:Soil

ANALYSES	RESULT	QUAL	REPORT LIMIT	UNITS	DILUTION FACTOR	DATE ANALYZED
VOLATILES - SW8260C		**Method:SW8260**				Analyst: WLR
1,2,4-Trimethylbenzene	**6.8**		**0.50**	**mg/Kg**	101	17-Apr-2014 21:38
1,2-Dichloroethane	ND		0.50	mg/Kg	101	17-Apr-2014 21:38
1,3,5-Trimethylbenzene	**2.3**		**0.50**	**mg/Kg**	101	17-Apr-2014 21:38
2-Butanone	ND		1.0	mg/Kg	101	17-Apr-2014 21:38
Benzene	**3.1**		**0.50**	**mg/Kg**	101	17-Apr-2014 21:38
Cyclohexane	**2.3**		**0.50**	**mg/Kg**	101	17-Apr-2014 21:38
Ethylbenzene	**5.8**		**0.50**	**mg/Kg**	101	17-Apr-2014 21:38
Isopropylbenzene	ND		0.50	mg/Kg	101	17-Apr-2014 21:38
Methylcyclohexane	**1.1**		**0.50**	**mg/Kg**	101	17-Apr-2014 21:38
Naphthalene	**0.84**		**0.50**	**mg/Kg**	101	17-Apr-2014 21:38
n-Butylbenzene	ND		0.50	mg/Kg	101	17-Apr-2014 21:38
n-Propylbenzene	**1.2**		**0.50**	**mg/Kg**	101	17-Apr-2014 21:38
Toluene	**21**		**0.50**	**mg/Kg**	101	17-Apr-2014 21:38
Xylenes, Total	**21**		**1.0**	**mg/Kg**	101	17-Apr-2014 21:38
Surr: 1,2-Dichloroethane-d4	*116*		*70-128*	*%REC*	*101*	*17-Apr-2014 21:38*
Surr: 4-Bromofluorobenzene	*93.4*		*73-126*	*%REC*	*101*	*17-Apr-2014 21:38*
Surr: Dibromofluoromethane	*103*		*71-128*	*%REC*	*101*	*17-Apr-2014 21:38*
Surr: Toluene-d8	*103*		*73-127*	*%REC*	*101*	*17-Apr-2014 21:38*
VPH - IOWA OA-1		**Method:IA OA-1**				Analyst: DNR
VPH - Gasoline Range Organics	**150**		**5.0**	**mg/Kg**	100	22-Apr-2014 21:32
Surr: 4-Bromofluorobenzene	*107*		*70-130*	*%REC*	*100*	*22-Apr-2014 21:32*

Note: See Qualifiers Page for a list of qualifiers and their explanation.

ANALYTICAL REPORT

Client: Apex Companies
Project: E3CE-0065 Andover Release Site
Sample ID: B-7(19)
Collection Date: 09-Apr-2014 12:00

WorkOrder:HS14040491
Lab ID:HS14040491-40
Matrix:Soil

ANALYSES	RESULT	QUAL	REPORT LIMIT	UNITS	DILUTION FACTOR	DATE ANALYZED
VOLATILES - SW8260C		**Method:SW8260**				Analyst: WLR
1,2,4-Trimethylbenzene	**32**		**6.4**	**mg/Kg**	1280	17-Apr-2014 22:05
1,2-Dichloroethane	ND		6.4	mg/Kg	1280	17-Apr-2014 22:05
1,3,5-Trimethylbenzene	**10**		**6.4**	**mg/Kg**	1280	17-Apr-2014 22:05
2-Butanone	ND		13	mg/Kg	1280	17-Apr-2014 22:05
Benzene	**16**		**6.4**	**mg/Kg**	1280	17-Apr-2014 22:05
Cyclohexane	**15**		**6.4**	**mg/Kg**	1280	17-Apr-2014 22:05
Ethylbenzene	**27**		**6.4**	**mg/Kg**	1280	17-Apr-2014 22:05
Isopropylbenzene	ND		6.4	mg/Kg	1280	17-Apr-2014 22:05
Methylcyclohexane	ND		6.4	mg/Kg	1280	17-Apr-2014 22:05
Naphthalene	ND		6.4	mg/Kg	1280	17-Apr-2014 22:05
n-Butylbenzene	ND		6.4	mg/Kg	1280	17-Apr-2014 22:05
n-Propylbenzene	ND		6.4	mg/Kg	1280	17-Apr-2014 22:05
Toluene	**120**		**6.4**	**mg/Kg**	1280	17-Apr-2014 22:05
Xylenes, Total	**110**		**13**	**mg/Kg**	1280	17-Apr-2014 22:05
Surr: 1,2-Dichloroethane-d4	*115*		*70-128*	*%REC*	*1280*	*17-Apr-2014 22:05*
Surr: 4-Bromofluorobenzene	*94.5*		*73-126*	*%REC*	*1280*	*17-Apr-2014 22:05*
Surr: Dibromofluoromethane	*103*		*71-128*	*%REC*	*1280*	*17-Apr-2014 22:05*
Surr: Toluene-d8	*104*		*73-127*	*%REC*	*1280*	*17-Apr-2014 22:05*
VPH - IOWA OA-1		**Method:IA OA-1**				Analyst: DNR
VPH - Gasoline Range Organics	**640**		**5.0**	**mg/Kg**	100	22-Apr-2014 21:48
Surr: 4-Bromofluorobenzene	*127*		*70-130*	*%REC*	*100*	*22-Apr-2014 21:48*

Note: See Qualifiers Page for a list of qualifiers and their explanation.

ANALYTICAL REPORT

Client: Apex Companies
Project: E3CE-0065 Andover Release Site
Sample ID: B--9(10)
Collection Date: 09-Apr-2014 13:50

WorkOrder:HS14040491
Lab ID:HS14040491-42
Matrix:Soil

ANALYSES	RESULT	QUAL	REPORT LIMIT	UNITS	DILUTION FACTOR	DATE ANALYZED
VOLATILES - SW8260C		**Method:SW8260**				Analyst: WLR
1,2,4-Trimethylbenzene	ND		0.0042	mg/Kg	1	17-Apr-2014 00:01
1,2-Dichloroethane	ND		0.0042	mg/Kg	1	17-Apr-2014 00:01
1,3,5-Trimethylbenzene	ND		0.0042	mg/Kg	1	17-Apr-2014 00:01
2-Butanone	ND		0.0083	mg/Kg	1	17-Apr-2014 00:01
Benzene	ND		0.0042	mg/Kg	1	17-Apr-2014 00:01
Cyclohexane	ND		0.0042	mg/Kg	1	17-Apr-2014 00:01
Ethylbenzene	ND		0.0042	mg/Kg	1	17-Apr-2014 00:01
Isopropylbenzene	ND		0.0042	mg/Kg	1	17-Apr-2014 00:01
Methylcyclohexane	ND		0.0042	mg/Kg	1	17-Apr-2014 00:01
Naphthalene	ND		0.0042	mg/Kg	1	17-Apr-2014 00:01
n-Butylbenzene	ND		0.0042	mg/Kg	1	17-Apr-2014 00:01
n-Propylbenzene	ND		0.0042	mg/Kg	1	17-Apr-2014 00:01
Toluene	ND		0.0042	mg/Kg	1	17-Apr-2014 00:01
Xylenes, Total	ND		0.0083	mg/Kg	1	17-Apr-2014 00:01
Surr: 1,2-Dichloroethane-d4	*92.5*		*70-128*	*%REC*	*1*	*17-Apr-2014 00:01*
Surr: 4-Bromofluorobenzene	*97.1*		*73-126*	*%REC*	*1*	*17-Apr-2014 00:01*
Surr: Dibromofluoromethane	*92.9*		*71-128*	*%REC*	*1*	*17-Apr-2014 00:01*
Surr: Toluene-d8	*102*		*73-127*	*%REC*	*1*	*17-Apr-2014 00:01*
VPH - IOWA OA-1		**Method:IA OA-1**				Analyst: DNR
VPH - Gasoline Range Organics	ND		0.050	mg/Kg	1	22-Apr-2014 15:22
Surr: 4-Bromofluorobenzene	*107*		*70-130*	*%REC*	*1*	*22-Apr-2014 15:22*

Note: See Qualifiers Page for a list of qualifiers and their explanation.

ANALYTICAL REPORT

Client: Apex Companies
Project: E3CE-0065 Andover Release Site
Sample ID: B-9(15)
Collection Date: 09-Apr-2014 14:05

WorkOrder:HS14040491
Lab ID:HS14040491-43
Matrix:Soil

ANALYSES	RESULT	QUAL	REPORT LIMIT	UNITS	DILUTION FACTOR	DATE ANALYZED
VOLATILES - SW8260C		**Method:SW8260**				Analyst: WLR
1,2,4-Trimethylbenzene	**0.094**		**0.0045**	**mg/Kg**	1	15-Apr-2014 23:11
1,2-Dichloroethane	ND		0.0045	mg/Kg	1	15-Apr-2014 23:11
1,3,5-Trimethylbenzene	**0.038**		**0.0045**	**mg/Kg**	1	15-Apr-2014 23:11
2-Butanone	**0.050**		**0.0091**	**mg/Kg**	1	15-Apr-2014 23:11
Benzene	**0.032**		**0.0045**	**mg/Kg**	1	15-Apr-2014 23:11
Cyclohexane	**0.10**		**0.0045**	**mg/Kg**	1	15-Apr-2014 23:11
Ethylbenzene	**0.030**		**0.0045**	**mg/Kg**	1	15-Apr-2014 23:11
Isopropylbenzene	**0.0089**		**0.0045**	**mg/Kg**	1	15-Apr-2014 23:11
Methylcyclohexane	**0.019**		**0.0045**	**mg/Kg**	1	15-Apr-2014 23:11
Naphthalene	**0.0085**		**0.0045**	**mg/Kg**	1	15-Apr-2014 23:11
n-Butylbenzene	**0.013**		**0.0045**	**mg/Kg**	1	15-Apr-2014 23:11
n-Propylbenzene	**0.031**		**0.0045**	**mg/Kg**	1	15-Apr-2014 23:11
Toluene	ND		0.0045	mg/Kg	1	15-Apr-2014 23:11
Xylenes, Total	**0.012**		**0.0091**	**mg/Kg**	1	15-Apr-2014 23:11
Surr: 1,2-Dichloroethane-d4	*95.3*		*70-128*	*%REC*	*1*	*15-Apr-2014 23:11*
Surr: 4-Bromofluorobenzene	*98.7*		*73-126*	*%REC*	*1*	*15-Apr-2014 23:11*
Surr: Dibromofluoromethane	*94.7*		*71-128*	*%REC*	*1*	*15-Apr-2014 23:11*
Surr: Toluene-d8	*101*		*73-127*	*%REC*	*1*	*15-Apr-2014 23:11*
VPH - IOWA OA-1		**Method:IA OA-1**				Analyst: DNR
VPH - Gasoline Range Organics	**8.8**		**5.0**	**mg/Kg**	100	22-Apr-2014 22:04
Surr: 4-Bromofluorobenzene	*104*		*70-130*	*%REC*	*100*	*22-Apr-2014 22:04*

Note: See Qualifiers Page for a list of qualifiers and their explanation.

ANALYTICAL REPORT

Client: Apex Companies
Project: E3CE-0065 Andover Release Site
Sample ID: B-9(18)
Collection Date: 09-Apr-2014 14:20

WorkOrder:HS14040491
Lab ID:HS14040491-44
Matrix:Soil

ANALYSES	RESULT	QUAL	REPORT LIMIT	UNITS	DILUTION FACTOR	DATE ANALYZED
VOLATILES - SW8260C		**Method:SW8260**				Analyst: WLR
1,2,4-Trimethylbenzene	ND		0.0042	mg/Kg	1	16-Apr-2014 00:21
1,2-Dichloroethane	ND		0.0042	mg/Kg	1	16-Apr-2014 00:21
1,3,5-Trimethylbenzene	ND		0.0042	mg/Kg	1	16-Apr-2014 00:21
2-Butanone	ND		0.0084	mg/Kg	1	16-Apr-2014 00:21
Benzene	ND		0.0042	mg/Kg	1	16-Apr-2014 00:21
Cyclohexane	ND		0.0042	mg/Kg	1	16-Apr-2014 00:21
Ethylbenzene	ND		0.0042	mg/Kg	1	16-Apr-2014 00:21
Isopropylbenzene	ND		0.0042	mg/Kg	1	16-Apr-2014 00:21
Methylcyclohexane	ND		0.0042	mg/Kg	1	16-Apr-2014 00:21
Naphthalene	ND		0.0042	mg/Kg	1	16-Apr-2014 00:21
n-Butylbenzene	ND		0.0042	mg/Kg	1	16-Apr-2014 00:21
n-Propylbenzene	ND		0.0042	mg/Kg	1	16-Apr-2014 00:21
Toluene	ND		0.0042	mg/Kg	1	16-Apr-2014 00:21
Xylenes, Total	ND		0.0084	mg/Kg	1	16-Apr-2014 00:21
Surr: 1,2-Dichloroethane-d4	*91.7*		*70-128*	*%REC*	*1*	*16-Apr-2014 00:21*
Surr: 4-Bromofluorobenzene	*97.8*		*73-126*	*%REC*	*1*	*16-Apr-2014 00:21*
Surr: Dibromofluoromethane	*94.9*		*71-128*	*%REC*	*1*	*16-Apr-2014 00:21*
Surr: Toluene-d8	*105*		*73-127*	*%REC*	*1*	*16-Apr-2014 00:21*
VPH - IOWA OA-1		**Method:IA OA-1**				Analyst: DNR
VPH - Gasoline Range Organics	ND		0.050	mg/Kg	1	22-Apr-2014 15:41
Surr: 4-Bromofluorobenzene	*110*		*70-130*	*%REC*	*1*	*22-Apr-2014 15:41*

Note: See Qualifiers Page for a list of qualifiers and their explanation.

ANALYTICAL REPORT

Client: Apex Companies
Project: E3CE-0065 Andover Release Site
Sample ID: B-10(4)
Collection Date: 09-Apr-2014 15:15

WorkOrder:HS14040491
Lab ID:HS14040491-46
Matrix:Soil

ANALYSES	RESULT	QUAL	REPORT LIMIT	UNITS	DILUTION FACTOR	DATE ANALYZED
VOLATILES - SW8260C		**Method:SW8260**				Analyst: WLR
1,2,4-Trimethylbenzene	**0.0098**		**0.0044**	**mg/Kg**	1	16-Apr-2014 00:44
1,2-Dichloroethane	ND		0.0044	mg/Kg	1	16-Apr-2014 00:44
1,3,5-Trimethylbenzene	**0.0053**		**0.0044**	**mg/Kg**	1	16-Apr-2014 00:44
2-Butanone	ND		0.0089	mg/Kg	1	16-Apr-2014 00:44
Benzene	**0.40**		**0.24**	**mg/Kg**	48	18-Apr-2014 14:58
Cyclohexane	**0.016**		**0.0044**	**mg/Kg**	1	16-Apr-2014 00:44
Ethylbenzene	**0.015**		**0.0044**	**mg/Kg**	1	16-Apr-2014 00:44
Isopropylbenzene	ND		0.0044	mg/Kg	1	16-Apr-2014 00:44
Methylcyclohexane	ND		0.0044	mg/Kg	1	16-Apr-2014 00:44
Naphthalene	ND		0.0044	mg/Kg	1	16-Apr-2014 00:44
n-Butylbenzene	ND		0.0044	mg/Kg	1	16-Apr-2014 00:44
n-Propylbenzene	ND		0.0044	mg/Kg	1	16-Apr-2014 00:44
Toluene	**0.016**		**0.0044**	**mg/Kg**	1	16-Apr-2014 00:44
Xylenes, Total	**0.050**		**0.0089**	**mg/Kg**	1	16-Apr-2014 00:44
Surr: 1,2-Dichloroethane-d4	*92.0*		*70-128*	*%REC*	*1*	*16-Apr-2014 00:44*
Surr: 1,2-Dichloroethane-d4	*113*		*70-128*	*%REC*	*48*	*18-Apr-2014 14:58*
Surr: 4-Bromofluorobenzene	*95.6*		*73-126*	*%REC*	*1*	*16-Apr-2014 00:44*
Surr: 4-Bromofluorobenzene	*101*		*73-126*	*%REC*	*48*	*18-Apr-2014 14:58*
Surr: Dibromofluoromethane	*93.5*		*71-128*	*%REC*	*1*	*16-Apr-2014 00:44*
Surr: Dibromofluoromethane	*97.6*		*71-128*	*%REC*	*48*	*18-Apr-2014 14:58*
Surr: Toluene-d8	*103*		*73-127*	*%REC*	*1*	*16-Apr-2014 00:44*
Surr: Toluene-d8	*101*		*73-127*	*%REC*	*48*	*18-Apr-2014 14:58*
VPH - IOWA OA-1		**Method:IA OA-1**				Analyst: DNR
VPH - Gasoline Range Organics	**0.52**		**0.050**	**mg/Kg**	1	22-Apr-2014 16:00
Surr: 4-Bromofluorobenzene	*114*		*70-130*	*%REC*	*1*	*22-Apr-2014 16:00*

Note: See Qualifiers Page for a list of qualifiers and their explanation.

ANALYTICAL REPORT

Client: Apex Companies
Project: E3CE-0065 Andover Release Site
Sample ID: B-10(10)
Collection Date: 09-Apr-2014 15:40

WorkOrder:HS14040491
Lab ID:HS14040491-47
Matrix:Soil

ANALYSES	RESULT	QUAL	REPORT LIMIT	UNITS	DILUTION FACTOR	DATE ANALYZED
VOLATILES - SW8260C		**Method:SW8260**				Analyst: WLR
1,2,4-Trimethylbenzene	ND		0.0044	mg/Kg	1	16-Apr-2014 01:07
1,2-Dichloroethane	ND		0.0044	mg/Kg	1	16-Apr-2014 01:07
1,3,5-Trimethylbenzene	ND		0.0044	mg/Kg	1	16-Apr-2014 01:07
2-Butanone	ND		0.0089	mg/Kg	1	16-Apr-2014 01:07
Benzene	**1.5**		**0.25**	**mg/Kg**	50	18-Apr-2014 15:26
Cyclohexane	**0.0075**		**0.0044**	**mg/Kg**	1	16-Apr-2014 01:07
Ethylbenzene	**0.011**		**0.0044**	**mg/Kg**	1	16-Apr-2014 01:07
Isopropylbenzene	ND		0.0044	mg/Kg	1	16-Apr-2014 01:07
Methylcyclohexane	ND		0.0044	mg/Kg	1	16-Apr-2014 01:07
Naphthalene	ND		0.0044	mg/Kg	1	16-Apr-2014 01:07
n-Butylbenzene	ND		0.0044	mg/Kg	1	16-Apr-2014 01:07
n-Propylbenzene	ND		0.0044	mg/Kg	1	16-Apr-2014 01:07
Toluene	ND		0.0044	mg/Kg	1	16-Apr-2014 01:07
Xylenes, Total	ND		0.0089	mg/Kg	1	16-Apr-2014 01:07
Surr: 1,2-Dichloroethane-d4	*92.4*		*70-128*	*%REC*	*1*	*16-Apr-2014 01:07*
Surr: 1,2-Dichloroethane-d4	*117*		*70-128*	*%REC*	*50*	*18-Apr-2014 15:26*
Surr: 4-Bromofluorobenzene	*92.6*		*73-126*	*%REC*	*1*	*16-Apr-2014 01:07*
Surr: 4-Bromofluorobenzene	*107*		*73-126*	*%REC*	*50*	*18-Apr-2014 15:26*
Surr: Dibromofluoromethane	*93.4*		*71-128*	*%REC*	*1*	*16-Apr-2014 01:07*
Surr: Dibromofluoromethane	*103*		*71-128*	*%REC*	*50*	*18-Apr-2014 15:26*
Surr: Toluene-d8	*101*		*73-127*	*%REC*	*1*	*16-Apr-2014 01:07*
Surr: Toluene-d8	*104*		*73-127*	*%REC*	*50*	*18-Apr-2014 15:26*
VPH - IOWA OA-1		**Method:IA OA-1**				Analyst: DNR
VPH - Gasoline Range Organics	**0.23**		**0.050**	**mg/Kg**	1	22-Apr-2014 16:19
Surr: 4-Bromofluorobenzene	*111*		*70-130*	*%REC*	*1*	*22-Apr-2014 16:19*

Note: See Qualifiers Page for a list of qualifiers and their explanation.

ANALYTICAL REPORT

Client: Apex Companies
Project: E3CE-0065 Andover Release Site
Sample ID: B-10(14.5)
Collection Date: 09-Apr-2014 16:00

WorkOrder:HS14040491
Lab ID:HS14040491-48
Matrix:Soil

ANALYSES	RESULT	QUAL	REPORT LIMIT	UNITS	DILUTION FACTOR	DATE ANALYZED
VOLATILES - SW8260C		**Method:SW8260**				Analyst: WLR
1,2,4-Trimethylbenzene	**17**		**1.9**	**mg/Kg**	385	17-Apr-2014 22:33
1,2-Dichloroethane	ND		1.9	mg/Kg	385	17-Apr-2014 22:33
1,3,5-Trimethylbenzene	**5.2**		**1.9**	**mg/Kg**	385	17-Apr-2014 22:33
2-Butanone	ND		3.8	mg/Kg	385	17-Apr-2014 22:33
Benzene	**12**		**1.9**	**mg/Kg**	385	17-Apr-2014 22:33
Cyclohexane	**12**		**1.9**	**mg/Kg**	385	17-Apr-2014 22:33
Ethylbenzene	**16**		**1.9**	**mg/Kg**	385	17-Apr-2014 22:33
Isopropylbenzene	ND		1.9	mg/Kg	385	17-Apr-2014 22:33
Methylcyclohexane	**3.1**		**1.9**	**mg/Kg**	385	17-Apr-2014 22:33
Naphthalene	**2.4**		**1.9**	**mg/Kg**	385	17-Apr-2014 22:33
n-Butylbenzene	ND		1.9	mg/Kg	385	17-Apr-2014 22:33
n-Propylbenzene	**3.5**		**1.9**	**mg/Kg**	385	17-Apr-2014 22:33
Toluene	**32**		**1.9**	**mg/Kg**	385	17-Apr-2014 22:33
Xylenes, Total	**52**		**3.8**	**mg/Kg**	385	17-Apr-2014 22:33
Surr: 1,2-Dichloroethane-d4	*117*		*70-128*	*%REC*	*385*	*17-Apr-2014 22:33*
Surr: 4-Bromofluorobenzene	*108*		*73-126*	*%REC*	*385*	*17-Apr-2014 22:33*
Surr: Dibromofluoromethane	*105*		*71-128*	*%REC*	*385*	*17-Apr-2014 22:33*
Surr: Toluene-d8	*99.9*		*73-127*	*%REC*	*385*	*17-Apr-2014 22:33*
VPH - IOWA OA-1		**Method:IA OA-1**				Analyst: DNR
VPH - Gasoline Range Organics	**490**		**5.0**	**mg/Kg**	100	22-Apr-2014 22:20
Surr: 4-Bromofluorobenzene	*114*		*70-130*	*%REC*	*100*	*22-Apr-2014 22:20*

Note: See Qualifiers Page for a list of qualifiers and their explanation.

ANALYTICAL REPORT

Client: Apex Companies
Project: E3CE-0065 Andover Release Site
Sample ID: B-10(20)
Collection Date: 09-Apr-2014 16:20

WorkOrder:HS14040491
Lab ID:HS14040491-50
Matrix:Soil

ANALYSES	RESULT	QUAL	REPORT LIMIT	UNITS	DILUTION FACTOR	DATE ANALYZED
VOLATILES - SW8260C		**Method:SW8260**				Analyst: WLR
1,2,4-Trimethylbenzene	ND		0.0050	mg/Kg	1	18-Apr-2014 00:58
1,2-Dichloroethane	ND		0.0050	mg/Kg	1	18-Apr-2014 00:58
1,3,5-Trimethylbenzene	ND		0.0050	mg/Kg	1	18-Apr-2014 00:58
2-Butanone	ND		0.0099	mg/Kg	1	18-Apr-2014 00:58
Benzene	ND		0.0050	mg/Kg	1	18-Apr-2014 00:58
Cyclohexane	ND		0.0050	mg/Kg	1	18-Apr-2014 00:58
Ethylbenzene	ND		0.0050	mg/Kg	1	18-Apr-2014 00:58
Isopropylbenzene	ND		0.0050	mg/Kg	1	18-Apr-2014 00:58
Methylcyclohexane	ND		0.0050	mg/Kg	1	18-Apr-2014 00:58
Naphthalene	ND		0.0050	mg/Kg	1	18-Apr-2014 00:58
n-Butylbenzene	ND		0.0050	mg/Kg	1	18-Apr-2014 00:58
n-Propylbenzene	ND		0.0050	mg/Kg	1	18-Apr-2014 00:58
Toluene	**0.014**		**0.0050**	**mg/Kg**	1	18-Apr-2014 00:58
Xylenes, Total	ND		0.0099	mg/Kg	1	18-Apr-2014 00:58
Surr: 1,2-Dichloroethane-d4	*90.4*		*70-128*	*%REC*	*1*	*18-Apr-2014 00:58*
Surr: 4-Bromofluorobenzene	*95.6*		*73-126*	*%REC*	*1*	*18-Apr-2014 00:58*
Surr: Dibromofluoromethane	*91.4*		*71-128*	*%REC*	*1*	*18-Apr-2014 00:58*
Surr: Toluene-d8	*104*		*73-127*	*%REC*	*1*	*18-Apr-2014 00:58*
VPH - IOWA OA-1		**Method:IA OA-1**				Analyst: DNR
VPH - Gasoline Range Organics	ND		0.050	mg/Kg	1	22-Apr-2014 16:38
Surr: 4-Bromofluorobenzene	*108*		*70-130*	*%REC*	*1*	*22-Apr-2014 16:38*

Note: See Qualifiers Page for a list of qualifiers and their explanation.

ANALYTICAL REPORT

Client: Apex Companies
Project: E3CE-0065 Andover Release Site
Sample ID: B-11(10)
Collection Date: 09-Apr-2014 17:05

WorkOrder:HS14040491
Lab ID:HS14040491-52
Matrix:Soil

ANALYSES	RESULT	QUAL	REPORT LIMIT	UNITS	DILUTION FACTOR	DATE ANALYZED
VOLATILES - SW8260C		**Method:SW8260**				Analyst: WLR
1,2,4-Trimethylbenzene	ND		0.0042	mg/Kg	1	18-Apr-2014 01:22
1,2-Dichloroethane	ND		0.0042	mg/Kg	1	18-Apr-2014 01:22
1,3,5-Trimethylbenzene	ND		0.0042	mg/Kg	1	18-Apr-2014 01:22
2-Butanone	ND		0.0083	mg/Kg	1	18-Apr-2014 01:22
Benzene	ND		0.0042	mg/Kg	1	18-Apr-2014 01:22
Cyclohexane	ND		0.0042	mg/Kg	1	18-Apr-2014 01:22
Ethylbenzene	ND		0.0042	mg/Kg	1	18-Apr-2014 01:22
Isopropylbenzene	ND		0.0042	mg/Kg	1	18-Apr-2014 01:22
Methylcyclohexane	ND		0.0042	mg/Kg	1	18-Apr-2014 01:22
Naphthalene	ND		0.0042	mg/Kg	1	18-Apr-2014 01:22
n-Butylbenzene	ND		0.0042	mg/Kg	1	18-Apr-2014 01:22
n-Propylbenzene	ND		0.0042	mg/Kg	1	18-Apr-2014 01:22
Toluene	ND		0.0042	mg/Kg	1	18-Apr-2014 01:22
Xylenes, Total	ND		0.0083	mg/Kg	1	18-Apr-2014 01:22
Surr: 1,2-Dichloroethane-d4	*91.1*		*70-128*	*%REC*	*1*	*18-Apr-2014 01:22*
Surr: 4-Bromofluorobenzene	*96.7*		*73-126*	*%REC*	*1*	*18-Apr-2014 01:22*
Surr: Dibromofluoromethane	*90.3*		*71-128*	*%REC*	*1*	*18-Apr-2014 01:22*
Surr: Toluene-d8	*102*		*73-127*	*%REC*	*1*	*18-Apr-2014 01:22*
VPH - IOWA OA-1		**Method:IA OA-1**				Analyst: DNR
VPH - Gasoline Range Organics	ND		0.050	mg/Kg	1	22-Apr-2014 16:57
Surr: 4-Bromofluorobenzene	*97.6*		*70-130*	*%REC*	*1*	*22-Apr-2014 16:57*

Note: See Qualifiers Page for a list of qualifiers and their explanation.

ANALYTICAL REPORT

Client: Apex Companies
Project: E3CE-0065 Andover Release Site
Sample ID: B-11(14.5)
Collection Date: 09-Apr-2014 17:25

WorkOrder:HS14040491
Lab ID:HS14040491-53
Matrix:Soil

ANALYSES	RESULT	QUAL	REPORT LIMIT	UNITS	DILUTION FACTOR	DATE ANALYZED
VOLATILES - SW8260C		**Method:SW8260**				Analyst: WLR
1,2,4-Trimethylbenzene	ND		0.0048	mg/Kg	1	16-Apr-2014 01:54
1,2-Dichloroethane	ND		0.0048	mg/Kg	1	16-Apr-2014 01:54
1,3,5-Trimethylbenzene	ND		0.0048	mg/Kg	1	16-Apr-2014 01:54
2-Butanone	ND		0.0097	mg/Kg	1	16-Apr-2014 01:54
Benzene	ND		0.0048	mg/Kg	1	16-Apr-2014 01:54
Cyclohexane	ND		0.0048	mg/Kg	1	16-Apr-2014 01:54
Ethylbenzene	ND		0.0048	mg/Kg	1	16-Apr-2014 01:54
Isopropylbenzene	ND		0.0048	mg/Kg	1	16-Apr-2014 01:54
Methylcyclohexane	ND		0.0048	mg/Kg	1	16-Apr-2014 01:54
Naphthalene	ND		0.0048	mg/Kg	1	16-Apr-2014 01:54
n-Butylbenzene	ND		0.0048	mg/Kg	1	16-Apr-2014 01:54
n-Propylbenzene	ND		0.0048	mg/Kg	1	16-Apr-2014 01:54
Toluene	ND		0.0048	mg/Kg	1	16-Apr-2014 01:54
Xylenes, Total	ND		0.0097	mg/Kg	1	16-Apr-2014 01:54
Surr: 1,2-Dichloroethane-d4	*96.6*		*70-128*	*%REC*	*1*	*16-Apr-2014 01:54*
Surr: 4-Bromofluorobenzene	*95.6*		*73-126*	*%REC*	*1*	*16-Apr-2014 01:54*
Surr: Dibromofluoromethane	*97.9*		*71-128*	*%REC*	*1*	*16-Apr-2014 01:54*
Surr: Toluene-d8	*103*		*73-127*	*%REC*	*1*	*16-Apr-2014 01:54*
VPH - IOWA OA-1		**Method:IA OA-1**				Analyst: DNR
VPH - Gasoline Range Organics	ND		0.050	mg/Kg	1	22-Apr-2014 17:15
Surr: 4-Bromofluorobenzene	*73.2*		*70-130*	*%REC*	*1*	*22-Apr-2014 17:15*

Note: See Qualifiers Page for a list of qualifiers and their explanation.

ANALYTICAL REPORT

Client: Apex Companies
Project: E3CE-0065 Andover Release Site
Sample ID: B-11(20)
Collection Date: 09-Apr-2014 17:40

WorkOrder:HS14040491
Lab ID:HS14040491-54
Matrix:Soil

ANALYSES	RESULT	QUAL	REPORT LIMIT	UNITS	DILUTION FACTOR	DATE ANALYZED
VOLATILES - SW8260C		**Method:SW8260**				Analyst: WLR
1,2,4-Trimethylbenzene	ND		0.22	mg/Kg	44	18-Apr-2014 10:30
1,2-Dichloroethane	ND		0.0044	mg/Kg	1	17-Apr-2014 01:57
1,3,5-Trimethylbenzene	**0.070**		**0.0044**	**mg/Kg**	1	17-Apr-2014 01:57
2-Butanone	ND		0.0088	mg/Kg	1	17-Apr-2014 01:57
Benzene	**0.64**		**0.22**	**mg/Kg**	44	18-Apr-2014 10:30
Cyclohexane	**0.13**		**0.0044**	**mg/Kg**	1	17-Apr-2014 01:57
Ethylbenzene	**0.31**		**0.22**	**mg/Kg**	44	18-Apr-2014 10:30
Isopropylbenzene	**0.010**		**0.0044**	**mg/Kg**	1	17-Apr-2014 01:57
Methylcyclohexane	**0.026**		**0.0044**	**mg/Kg**	1	17-Apr-2014 01:57
Naphthalene	**0.070**		**0.0044**	**mg/Kg**	1	17-Apr-2014 01:57
n-Butylbenzene	**0.012**		**0.0044**	**mg/Kg**	1	17-Apr-2014 01:57
n-Propylbenzene	**0.042**		**0.0044**	**mg/Kg**	1	17-Apr-2014 01:57
Toluene	**0.44**		**0.22**	**mg/Kg**	44	18-Apr-2014 10:30
Xylenes, Total	**0.75**		**0.44**	**mg/Kg**	44	18-Apr-2014 10:30
Surr: 1,2-Dichloroethane-d4	*92.3*		*70-128*	*%REC*	*1*	*17-Apr-2014 01:57*
Surr: 1,2-Dichloroethane-d4	*116*		*70-128*	*%REC*	*44*	*18-Apr-2014 10:30*
Surr: 4-Bromofluorobenzene	*98.1*		*73-126*	*%REC*	*1*	*17-Apr-2014 01:57*
Surr: 4-Bromofluorobenzene	*106*		*73-126*	*%REC*	*44*	*18-Apr-2014 10:30*
Surr: Dibromofluoromethane	*93.5*		*71-128*	*%REC*	*1*	*17-Apr-2014 01:57*
Surr: Dibromofluoromethane	*104*		*71-128*	*%REC*	*44*	*18-Apr-2014 10:30*
Surr: Toluene-d8	*100*		*73-127*	*%REC*	*1*	*17-Apr-2014 01:57*
Surr: Toluene-d8	*108*		*73-127*	*%REC*	*44*	*18-Apr-2014 10:30*
VPH - IOWA OA-1		**Method:IA OA-1**				Analyst: DNR
VPH - Gasoline Range Organics	**12**		**5.0**	**mg/Kg**	100	22-Apr-2014 22:36
Surr: 4-Bromofluorobenzene	*104*		*70-130*	*%REC*	*100*	*22-Apr-2014 22:36*

Note: See Qualifiers Page for a list of qualifiers and their explanation.

ANALYTICAL REPORT

Client: Apex Companies
Project: E3CE-0065 Andover Release Site
Sample ID: B-12(10)
Collection Date: 10-Apr-2014 09:10

WorkOrder:HS14040491
Lab ID:HS14040491-56
Matrix:Soil

ANALYSES	RESULT	QUAL	REPORT LIMIT	UNITS	DILUTION FACTOR	DATE ANALYZED
VOLATILES - SW8260C		**Method:SW8260**				Analyst: WLR
1,2,4-Trimethylbenzene	ND		0.0038	mg/Kg	1	16-Apr-2014 02:40
1,2-Dichloroethane	ND		0.0038	mg/Kg	1	16-Apr-2014 02:40
1,3,5-Trimethylbenzene	ND		0.0038	mg/Kg	1	16-Apr-2014 02:40
2-Butanone	ND		0.0077	mg/Kg	1	16-Apr-2014 02:40
Benzene	ND		0.0038	mg/Kg	1	16-Apr-2014 02:40
Cyclohexane	ND		0.0038	mg/Kg	1	16-Apr-2014 02:40
Ethylbenzene	ND		0.0038	mg/Kg	1	16-Apr-2014 02:40
Isopropylbenzene	ND		0.0038	mg/Kg	1	16-Apr-2014 02:40
Methylcyclohexane	ND		0.0038	mg/Kg	1	16-Apr-2014 02:40
Naphthalene	ND		0.0038	mg/Kg	1	16-Apr-2014 02:40
n-Butylbenzene	ND		0.0038	mg/Kg	1	16-Apr-2014 02:40
n-Propylbenzene	ND		0.0038	mg/Kg	1	16-Apr-2014 02:40
Toluene	ND		0.0038	mg/Kg	1	16-Apr-2014 02:40
Xylenes, Total	ND		0.0077	mg/Kg	1	16-Apr-2014 02:40
Surr: 1,2-Dichloroethane-d4	*91.5*		*70-128*	*%REC*	*1*	*16-Apr-2014 02:40*
Surr: 4-Bromofluorobenzene	*93.6*		*73-126*	*%REC*	*1*	*16-Apr-2014 02:40*
Surr: Dibromofluoromethane	*94.4*		*71-128*	*%REC*	*1*	*16-Apr-2014 02:40*
Surr: Toluene-d8	*102*		*73-127*	*%REC*	*1*	*16-Apr-2014 02:40*
VPH - IOWA OA-1		**Method:IA OA-1**				Analyst: DNR
VPH - Gasoline Range Organics	ND		0.050	mg/Kg	1	22-Apr-2014 18:50
Surr: 4-Bromofluorobenzene	*78.1*		*70-130*	*%REC*	*1*	*22-Apr-2014 18:50*

Note: See Qualifiers Page for a list of qualifiers and their explanation.

ANALYTICAL REPORT

Client: Apex Companies
Project: E3CE-0065 Andover Release Site
Sample ID: B-12(15)
Collection Date: 10-Apr-2014 09:45

WorkOrder:HS14040491
Lab ID:HS14040491-58
Matrix:Soil

ANALYSES	RESULT	QUAL	REPORT LIMIT	UNITS	DILUTION FACTOR	DATE ANALYZED
VOLATILES - SW8260C		**Method:SW8260**				Analyst: WLR
1,2,4-Trimethylbenzene	**68**		**5.0**	**mg/Kg**	1000	17-Apr-2014 23:01
1,2-Dichloroethane	ND		5.0	mg/Kg	1000	17-Apr-2014 23:01
1,3,5-Trimethylbenzene	**24**		**5.0**	**mg/Kg**	1000	17-Apr-2014 23:01
2-Butanone	ND		10	mg/Kg	1000	17-Apr-2014 23:01
Benzene	**10**		**5.0**	**mg/Kg**	1000	17-Apr-2014 23:01
Cyclohexane	**31**		**5.0**	**mg/Kg**	1000	17-Apr-2014 23:01
Ethylbenzene	ND		5.0	mg/Kg	1000	17-Apr-2014 23:01
Isopropylbenzene	ND		5.0	mg/Kg	1000	17-Apr-2014 23:01
Methylcyclohexane	**12**		**5.0**	**mg/Kg**	1000	17-Apr-2014 23:01
Naphthalene	**8.0**		**5.0**	**mg/Kg**	1000	17-Apr-2014 23:01
n-Butylbenzene	ND		5.0	mg/Kg	1000	17-Apr-2014 23:01
n-Propylbenzene	**13**		**5.0**	**mg/Kg**	1000	17-Apr-2014 23:01
Toluene	ND		5.0	mg/Kg	1000	17-Apr-2014 23:01
Xylenes, Total	**33**		**10**	**mg/Kg**	1000	17-Apr-2014 23:01
Surr: 1,2-Dichloroethane-d4	*116*		*70-128*	*%REC*	*1000*	*17-Apr-2014 23:01*
Surr: 4-Bromofluorobenzene	*105*		*73-126*	*%REC*	*1000*	*17-Apr-2014 23:01*
Surr: Dibromofluoromethane	*106*		*71-128*	*%REC*	*1000*	*17-Apr-2014 23:01*
Surr: Toluene-d8	*98.9*		*73-127*	*%REC*	*1000*	*17-Apr-2014 23:01*
VPH - IOWA OA-1		**Method:IA OA-1**				Analyst: DNR
VPH - Gasoline Range Organics	**1,100**		**5.0**	**mg/Kg**	100	22-Apr-2014 23:07
Surr: 4-Bromofluorobenzene	*282*	*S*	*70-130*	*%REC*	*100*	*22-Apr-2014 23:07*

Note: See Qualifiers Page for a list of qualifiers and their explanation.

ANALYTICAL REPORT

Client: Apex Companies
Project: E3CE-0065 Andover Release Site
Sample ID: B-12(18)
Collection Date: 10-Apr-2014 10:00

WorkOrder:HS14040491
Lab ID:HS14040491-59
Matrix:Soil

ANALYSES	RESULT	QUAL	REPORT LIMIT	UNITS	DILUTION FACTOR	DATE ANALYZED
VOLATILES - SW8260C		**Method:SW8260**				Analyst: WLR
1,2,4-Trimethylbenzene	ND		0.0038	mg/Kg	1	18-Apr-2014 01:45
1,2-Dichloroethane	ND		0.0038	mg/Kg	1	18-Apr-2014 01:45
1,3,5-Trimethylbenzene	ND		0.0038	mg/Kg	1	18-Apr-2014 01:45
2-Butanone	ND		0.0077	mg/Kg	1	18-Apr-2014 01:45
Benzene	**0.0047**		**0.0038**	**mg/Kg**	1	18-Apr-2014 01:45
Cyclohexane	ND		0.0038	mg/Kg	1	18-Apr-2014 01:45
Ethylbenzene	ND		0.0038	mg/Kg	1	18-Apr-2014 01:45
Isopropylbenzene	ND		0.0038	mg/Kg	1	18-Apr-2014 01:45
Methylcyclohexane	ND		0.0038	mg/Kg	1	18-Apr-2014 01:45
Naphthalene	ND		0.0038	mg/Kg	1	18-Apr-2014 01:45
n-Butylbenzene	ND		0.0038	mg/Kg	1	18-Apr-2014 01:45
n-Propylbenzene	ND		0.0038	mg/Kg	1	18-Apr-2014 01:45
Toluene	ND		0.0038	mg/Kg	1	18-Apr-2014 01:45
Xylenes, Total	ND		0.0077	mg/Kg	1	18-Apr-2014 01:45
Surr: 1,2-Dichloroethane-d4	*86.8*		*70-128*	*%REC*	*1*	*18-Apr-2014 01:45*
Surr: 4-Bromofluorobenzene	*93.9*		*73-126*	*%REC*	*1*	*18-Apr-2014 01:45*
Surr: Dibromofluoromethane	*88.2*		*71-128*	*%REC*	*1*	*18-Apr-2014 01:45*
Surr: Toluene-d8	*103*		*73-127*	*%REC*	*1*	*18-Apr-2014 01:45*
VPH - IOWA OA-1		**Method:IA OA-1**				Analyst: DNR
VPH - Gasoline Range Organics	**0.057**		**0.050**	**mg/Kg**	1	22-Apr-2014 19:09
Surr: 4-Bromofluorobenzene	*88.8*		*70-130*	*%REC*	*1*	*22-Apr-2014 19:09*

Note: See Qualifiers Page for a list of qualifiers and their explanation.

ANALYTICAL REPORT

Client: Apex Companies
Project: E3CE-0065 Andover Release Site
Sample ID: B-13(10)
Collection Date: 10-Apr-2014 11:15

WorkOrder:HS14040491
Lab ID:HS14040491-61
Matrix:Soil

ANALYSES	RESULT	QUAL	REPORT LIMIT	UNITS	DILUTION FACTOR	DATE ANALYZED
VOLATILES - SW8260C		**Method:SW8260**				Analyst: WLR
1,2,4-Trimethylbenzene	ND		0.0040	mg/Kg	1	17-Apr-2014 21:28
1,2-Dichloroethane	ND		0.0040	mg/Kg	1	17-Apr-2014 21:28
1,3,5-Trimethylbenzene	ND		0.0040	mg/Kg	1	17-Apr-2014 21:28
2-Butanone	ND		0.0079	mg/Kg	1	17-Apr-2014 21:28
Benzene	ND		0.0040	mg/Kg	1	17-Apr-2014 21:28
Cyclohexane	ND		0.0040	mg/Kg	1	17-Apr-2014 21:28
Ethylbenzene	ND		0.0040	mg/Kg	1	17-Apr-2014 21:28
Isopropylbenzene	ND		0.0040	mg/Kg	1	17-Apr-2014 21:28
Methylcyclohexane	ND		0.0040	mg/Kg	1	17-Apr-2014 21:28
Naphthalene	ND		0.0040	mg/Kg	1	17-Apr-2014 21:28
n-Butylbenzene	ND		0.0040	mg/Kg	1	17-Apr-2014 21:28
n-Propylbenzene	ND		0.0040	mg/Kg	1	17-Apr-2014 21:28
Toluene	ND		0.0040	mg/Kg	1	17-Apr-2014 21:28
Xylenes, Total	ND		0.0079	mg/Kg	1	17-Apr-2014 21:28
Surr: 1,2-Dichloroethane-d4	*88.9*		*70-128*	*%REC*	*1*	*17-Apr-2014 21:28*
Surr: 4-Bromofluorobenzene	*94.6*		*73-126*	*%REC*	*1*	*17-Apr-2014 21:28*
Surr: Dibromofluoromethane	*92.5*		*71-128*	*%REC*	*1*	*17-Apr-2014 21:28*
Surr: Toluene-d8	*103*		*73-127*	*%REC*	*1*	*17-Apr-2014 21:28*
VPH - IOWA OA-1		**Method:IA OA-1**				Analyst: DNR
VPH - Gasoline Range Organics	ND		0.050	mg/Kg	1	22-Apr-2014 19:27
Surr: 4-Bromofluorobenzene	*89.9*		*70-130*	*%REC*	*1*	*22-Apr-2014 19:27*

Note: See Qualifiers Page for a list of qualifiers and their explanation.

ANALYTICAL REPORT

Client: Apex Companies
Project: E3CE-0065 Andover Release Site
Sample ID: B-13(13)
Collection Date: 10-Apr-2014 11:30

WorkOrder:HS14040491
Lab ID:HS14040491-62
Matrix:Soil

ANALYSES	RESULT	QUAL	REPORT LIMIT	UNITS	DILUTION FACTOR	DATE ANALYZED
VOLATILES - SW8260C		**Method:SW8260**				Analyst: WLR
1,2,4-Trimethylbenzene	ND		0.0041	mg/Kg	1	20-Apr-2014 00:23
1,2-Dichloroethane	ND		0.0041	mg/Kg	1	20-Apr-2014 00:23
1,3,5-Trimethylbenzene	ND		0.0041	mg/Kg	1	20-Apr-2014 00:23
2-Butanone	**0.022**		**0.0082**	**mg/Kg**	1	20-Apr-2014 00:23
Benzene	**0.046**		**0.0041**	**mg/Kg**	1	20-Apr-2014 00:23
Cyclohexane	**0.015**		**0.0041**	**mg/Kg**	1	20-Apr-2014 00:23
Ethylbenzene	**0.013**		**0.0041**	**mg/Kg**	1	20-Apr-2014 00:23
Isopropylbenzene	ND		0.0041	mg/Kg	1	20-Apr-2014 00:23
Methylcyclohexane	ND		0.0041	mg/Kg	1	20-Apr-2014 00:23
Naphthalene	ND		0.0041	mg/Kg	1	20-Apr-2014 00:23
n-Butylbenzene	ND		0.0041	mg/Kg	1	20-Apr-2014 00:23
n-Propylbenzene	ND		0.0041	mg/Kg	1	20-Apr-2014 00:23
Toluene	ND		0.0041	mg/Kg	1	20-Apr-2014 00:23
Xylenes, Total	ND		0.0082	mg/Kg	1	20-Apr-2014 00:23
Surr: 1,2-Dichloroethane-d4	*87.5*		*70-128*	*%REC*	*1*	*20-Apr-2014 00:23*
Surr: 4-Bromofluorobenzene	*94.8*		*73-126*	*%REC*	*1*	*20-Apr-2014 00:23*
Surr: Dibromofluoromethane	*91.0*		*71-128*	*%REC*	*1*	*20-Apr-2014 00:23*
Surr: Toluene-d8	*103*		*73-127*	*%REC*	*1*	*20-Apr-2014 00:23*
VPH - IOWA OA-1		**Method:IA OA-1**				Analyst: DNR
VPH - Gasoline Range Organics	**0.49**		**0.050**	**mg/Kg**	1	22-Apr-2014 19:46
Surr: 4-Bromofluorobenzene	*77.9*		*70-130*	*%REC*	*1*	*22-Apr-2014 19:46*

Note: See Qualifiers Page for a list of qualifiers and their explanation.

ANALYTICAL REPORT

Client: Apex Companies
Project: E3CE-0065 Andover Release Site
Sample ID: B-13(19)
Collection Date: 10-Apr-2014 12:00

WorkOrder:HS14040491
Lab ID:HS14040491-64
Matrix:Soil

ANALYSES	RESULT	QUAL	REPORT LIMIT	UNITS	DILUTION FACTOR	DATE ANALYZED
VOLATILES - SW8260C		**Method:SW8260**				Analyst: WLR
1,2,4-Trimethylbenzene	ND		0.0048	mg/Kg	1	17-Apr-2014 03:07
1,2-Dichloroethane	ND		0.0048	mg/Kg	1	17-Apr-2014 03:07
1,3,5-Trimethylbenzene	ND		0.0048	mg/Kg	1	17-Apr-2014 03:07
2-Butanone	ND		0.0096	mg/Kg	1	17-Apr-2014 03:07
Benzene	ND		0.0048	mg/Kg	1	17-Apr-2014 03:07
Cyclohexane	ND		0.0048	mg/Kg	1	17-Apr-2014 03:07
Ethylbenzene	ND		0.0048	mg/Kg	1	17-Apr-2014 03:07
Isopropylbenzene	ND		0.0048	mg/Kg	1	17-Apr-2014 03:07
Methylcyclohexane	ND		0.0048	mg/Kg	1	17-Apr-2014 03:07
Naphthalene	ND		0.0048	mg/Kg	1	17-Apr-2014 03:07
n-Butylbenzene	ND		0.0048	mg/Kg	1	17-Apr-2014 03:07
n-Propylbenzene	ND		0.0048	mg/Kg	1	17-Apr-2014 03:07
Toluene	ND		0.0048	mg/Kg	1	17-Apr-2014 03:07
Xylenes, Total	ND		0.0096	mg/Kg	1	17-Apr-2014 03:07
Surr: 1,2-Dichloroethane-d4	*91.9*		*70-128*	*%REC*	*1*	*17-Apr-2014 03:07*
Surr: 4-Bromofluorobenzene	*94.0*		*73-126*	*%REC*	*1*	*17-Apr-2014 03:07*
Surr: Dibromofluoromethane	*94.8*		*71-128*	*%REC*	*1*	*17-Apr-2014 03:07*
Surr: Toluene-d8	*101*		*73-127*	*%REC*	*1*	*17-Apr-2014 03:07*
VPH - IOWA OA-1		**Method:IA OA-1**				Analyst: DNR
VPH - Gasoline Range Organics	**0.14**		**0.050**	**mg/Kg**	1	22-Apr-2014 20:05
Surr: 4-Bromofluorobenzene	*82.7*		*70-130*	*%REC*	*1*	*22-Apr-2014 20:05*

Note: See Qualifiers Page for a list of qualifiers and their explanation.

ANALYTICAL REPORT

Client: Apex Companies
Project: E3CE-0065 Andover Release Site
Sample ID: Trip Blank-1
Collection Date: 07-Apr-2014 00:00

WorkOrder:HS14040491
Lab ID:HS14040491-65
Matrix:Water

ANALYSES	RESULT	QUAL	REPORT LIMIT	UNITS	DILUTION FACTOR	DATE ANALYZED
LOW LEVEL VOLATILES - SW8260C		**Method:SW8260**				Analyst: AKP
1,2,4-Trimethylbenzene	ND		0.0010	mg/L	1	19-Apr-2014 00:34
1,2-Dichloroethane	ND		0.0010	mg/L	1	19-Apr-2014 00:34
1,3,5-Trimethylbenzene	ND		0.0010	mg/L	1	19-Apr-2014 00:34
2-Butanone	ND		0.0020	mg/L	1	19-Apr-2014 00:34
Benzene	ND		0.0010	mg/L	1	19-Apr-2014 00:34
Cyclohexane	ND		0.0010	mg/L	1	19-Apr-2014 00:34
Ethylbenzene	ND		0.0010	mg/L	1	19-Apr-2014 00:34
Isopropylbenzene	ND		0.0010	mg/L	1	19-Apr-2014 00:34
Methylcyclohexane	ND		0.0010	mg/L	1	19-Apr-2014 00:34
Naphthalene	ND		0.0010	mg/L	1	19-Apr-2014 00:34
n-Butylbenzene	ND		0.0010	mg/L	1	19-Apr-2014 00:34
n-Propylbenzene	ND		0.0010	mg/L	1	19-Apr-2014 00:34
Toluene	ND		0.0010	mg/L	1	19-Apr-2014 00:34
Xylenes, Total	ND		0.0030	mg/L	1	19-Apr-2014 00:34
Surr: 1,2-Dichloroethane-d4	*92.2*		*71-125*	*%REC*	*1*	*19-Apr-2014 00:34*
Surr: 4-Bromofluorobenzene	*99.7*		*70-125*	*%REC*	*1*	*19-Apr-2014 00:34*
Surr: Dibromofluoromethane	*94.9*		*74-125*	*%REC*	*1*	*19-Apr-2014 00:34*
Surr: Toluene-d8	*99.0*		*75-125*	*%REC*	*1*	*19-Apr-2014 00:34*

Note: See Qualifiers Page for a list of qualifiers and their explanation.

ALS Group USA, Corp Date: 28-Apr-14

Client:	Apex Companies	**ANALYTICAL REPORT**
Project:	E3CE-0065 Andover Release Site	WorkOrder:HS14040491
Sample ID:	Trip Blank-2	Lab ID:HS14040491-66
Collection Date:	07-Apr-2014 00:00	Matrix:Water

ANALYSES	RESULT	QUAL	REPORT LIMIT	UNITS	DILUTION FACTOR	DATE ANALYZED
LOW LEVEL VOLATILES - SW8260C		**Method:SW8260**				Analyst: AKP
1,2,4-Trimethylbenzene	ND		0.0010	mg/L	1	19-Apr-2014 00:59
1,2-Dichloroethane	ND		0.0010	mg/L	1	19-Apr-2014 00:59
1,3,5-Trimethylbenzene	ND		0.0010	mg/L	1	19-Apr-2014 00:59
2-Butanone	ND		0.0020	mg/L	1	19-Apr-2014 00:59
Benzene	ND		0.0010	mg/L	1	19-Apr-2014 00:59
Cyclohexane	ND		0.0010	mg/L	1	19-Apr-2014 00:59
Ethylbenzene	ND		0.0010	mg/L	1	19-Apr-2014 00:59
Isopropylbenzene	ND		0.0010	mg/L	1	19-Apr-2014 00:59
Methylcyclohexane	ND		0.0010	mg/L	1	19-Apr-2014 00:59
Naphthalene	ND		0.0010	mg/L	1	19-Apr-2014 00:59
n-Butylbenzene	ND		0.0010	mg/L	1	19-Apr-2014 00:59
n-Propylbenzene	ND		0.0010	mg/L	1	19-Apr-2014 00:59
Toluene	ND		0.0010	mg/L	1	19-Apr-2014 00:59
Xylenes, Total	ND		0.0030	mg/L	1	19-Apr-2014 00:59
Surr: 1,2-Dichloroethane-d4	*90.6*		*71-125*	*%REC*	*1*	*19-Apr-2014 00:59*
Surr: 4-Bromofluorobenzene	*98.6*		*70-125*	*%REC*	*1*	*19-Apr-2014 00:59*
Surr: Dibromofluoromethane	*94.5*		*74-125*	*%REC*	*1*	*19-Apr-2014 00:59*
Surr: Toluene-d8	*95.6*		*75-125*	*%REC*	*1*	*19-Apr-2014 00:59*

Note: See Qualifiers Page for a list of qualifiers and their explanation.

ANALYTICAL REPORT

Client: Apex Companies
Project: E3CE-0065 Andover Release Site
Sample ID: Trip Blank-3
Collection Date: 07-Apr-2014 00:00

WorkOrder:HS14040491
Lab ID:HS14040491-67
Matrix:Water

ANALYSES	RESULT	QUAL	REPORT LIMIT	UNITS	DILUTION FACTOR	DATE ANALYZED
LOW LEVEL VOLATILES - SW8260C		**Method:SW8260**				Analyst: AKP
1,2,4-Trimethylbenzene	ND		0.0010	mg/L	1	19-Apr-2014 01:24
1,2-Dichloroethane	ND		0.0010	mg/L	1	19-Apr-2014 01:24
1,3,5-Trimethylbenzene	ND		0.0010	mg/L	1	19-Apr-2014 01:24
2-Butanone	ND		0.0020	mg/L	1	19-Apr-2014 01:24
Benzene	ND		0.0010	mg/L	1	19-Apr-2014 01:24
Cyclohexane	ND		0.0010	mg/L	1	19-Apr-2014 01:24
Ethylbenzene	ND		0.0010	mg/L	1	19-Apr-2014 01:24
Isopropylbenzene	ND		0.0010	mg/L	1	19-Apr-2014 01:24
Methylcyclohexane	ND		0.0010	mg/L	1	19-Apr-2014 01:24
Naphthalene	ND		0.0010	mg/L	1	19-Apr-2014 01:24
n-Butylbenzene	ND		0.0010	mg/L	1	19-Apr-2014 01:24
n-Propylbenzene	ND		0.0010	mg/L	1	19-Apr-2014 01:24
Toluene	ND		0.0010	mg/L	1	19-Apr-2014 01:24
Xylenes, Total	ND		0.0030	mg/L	1	19-Apr-2014 01:24
Surr: 1,2-Dichloroethane-d4	*91.1*		*71-125*	*%REC*	*1*	*19-Apr-2014 01:24*
Surr: 4-Bromofluorobenzene	*99.8*		*70-125*	*%REC*	*1*	*19-Apr-2014 01:24*
Surr: Dibromofluoromethane	*94.0*		*74-125*	*%REC*	*1*	*19-Apr-2014 01:24*
Surr: Toluene-d8	*102*		*75-125*	*%REC*	*1*	*19-Apr-2014 01:24*

Note: See Qualifiers Page for a list of qualifiers and their explanation.

ANALYTICAL REPORT

Client: Apex Companies
Project: E3CE-0065 Andover Release Site
Sample ID: Trip Blank-4
Collection Date: 07-Apr-2014 00:00

WorkOrder:HS14040491
Lab ID:HS14040491-68
Matrix:Water

ANALYSES	RESULT	QUAL	REPORT LIMIT	UNITS	DILUTION FACTOR	DATE ANALYZED
LOW LEVEL VOLATILES - SW8260C		**Method:SW8260**				Analyst: AKP
1,2,4-Trimethylbenzene	ND		0.0010	mg/L	1	19-Apr-2014 01:48
1,2-Dichloroethane	ND		0.0010	mg/L	1	19-Apr-2014 01:48
1,3,5-Trimethylbenzene	ND		0.0010	mg/L	1	19-Apr-2014 01:48
2-Butanone	ND		0.0020	mg/L	1	19-Apr-2014 01:48
Benzene	ND		0.0010	mg/L	1	19-Apr-2014 01:48
Cyclohexane	ND		0.0010	mg/L	1	19-Apr-2014 01:48
Ethylbenzene	ND		0.0010	mg/L	1	19-Apr-2014 01:48
Isopropylbenzene	ND		0.0010	mg/L	1	19-Apr-2014 01:48
Methylcyclohexane	ND		0.0010	mg/L	1	19-Apr-2014 01:48
Naphthalene	ND		0.0010	mg/L	1	19-Apr-2014 01:48
n-Butylbenzene	ND		0.0010	mg/L	1	19-Apr-2014 01:48
n-Propylbenzene	ND		0.0010	mg/L	1	19-Apr-2014 01:48
Toluene	ND		0.0010	mg/L	1	19-Apr-2014 01:48
Xylenes, Total	ND		0.0030	mg/L	1	19-Apr-2014 01:48
Surr: 1,2-Dichloroethane-d4	*90.8*		*71-125*	*%REC*	*1*	*19-Apr-2014 01:48*
Surr: 4-Bromofluorobenzene	*101*		*70-125*	*%REC*	*1*	*19-Apr-2014 01:48*
Surr: Dibromofluoromethane	*94.6*		*74-125*	*%REC*	*1*	*19-Apr-2014 01:48*
Surr: Toluene-d8	*91.7*		*75-125*	*%REC*	*1*	*19-Apr-2014 01:48*

Note: See Qualifiers Page for a list of qualifiers and their explanation.

ANALYTICAL REPORT

Client: Apex Companies
Project: E3CE-0065 Andover Release Site
Sample ID: Trip Blank-5
Collection Date: 07-Apr-2014 00:00

WorkOrder:HS14040491
Lab ID:HS14040491-69
Matrix:Water

ANALYSES	RESULT	QUAL	REPORT LIMIT	UNITS	DILUTION FACTOR	DATE ANALYZED
LOW LEVEL VOLATILES - SW8260C		**Method:SW8260**				Analyst: AKP
1,2,4-Trimethylbenzene	ND		0.0010	mg/L	1	19-Apr-2014 02:13
1,2-Dichloroethane	ND		0.0010	mg/L	1	19-Apr-2014 02:13
1,3,5-Trimethylbenzene	ND		0.0010	mg/L	1	19-Apr-2014 02:13
2-Butanone	ND		0.0020	mg/L	1	19-Apr-2014 02:13
Benzene	ND		0.0010	mg/L	1	19-Apr-2014 02:13
Cyclohexane	ND		0.0010	mg/L	1	19-Apr-2014 02:13
Ethylbenzene	ND		0.0010	mg/L	1	19-Apr-2014 02:13
Isopropylbenzene	ND		0.0010	mg/L	1	19-Apr-2014 02:13
Methylcyclohexane	ND		0.0010	mg/L	1	19-Apr-2014 02:13
Naphthalene	ND		0.0010	mg/L	1	19-Apr-2014 02:13
n-Butylbenzene	ND		0.0010	mg/L	1	19-Apr-2014 02:13
n-Propylbenzene	ND		0.0010	mg/L	1	19-Apr-2014 02:13
Toluene	ND		0.0010	mg/L	1	19-Apr-2014 02:13
Xylenes, Total	ND		0.0030	mg/L	1	19-Apr-2014 02:13
Surr: 1,2-Dichloroethane-d4	*91.9*		*71-125*	*%REC*	*1*	*19-Apr-2014 02:13*
Surr: 4-Bromofluorobenzene	*100.0*		*70-125*	*%REC*	*1*	*19-Apr-2014 02:13*
Surr: Dibromofluoromethane	*93.5*		*74-125*	*%REC*	*1*	*19-Apr-2014 02:13*
Surr: Toluene-d8	*98.5*		*75-125*	*%REC*	*1*	*19-Apr-2014 02:13*

Note: See Qualifiers Page for a list of qualifiers and their explanation.

ANALYTICAL REPORT

Client: Apex Companies
Project: E3CE-0065 Andover Release Site
Sample ID: Trip Blank-6
Collection Date: 07-Apr-2014 00:00

WorkOrder:HS14040491
Lab ID:HS14040491-70
Matrix:Water

ANALYSES	RESULT	QUAL	REPORT LIMIT	UNITS	DILUTION FACTOR	DATE ANALYZED
LOW LEVEL VOLATILES - SW8260C		**Method:SW8260**				Analyst: AKP
1,2,4-Trimethylbenzene	ND		0.0010	mg/L	1	19-Apr-2014 02:37
1,2-Dichloroethane	ND		0.0010	mg/L	1	19-Apr-2014 02:37
1,3,5-Trimethylbenzene	ND		0.0010	mg/L	1	19-Apr-2014 02:37
2-Butanone	ND		0.0020	mg/L	1	19-Apr-2014 02:37
Benzene	ND		0.0010	mg/L	1	19-Apr-2014 02:37
Cyclohexane	ND		0.0010	mg/L	1	19-Apr-2014 02:37
Ethylbenzene	ND		0.0010	mg/L	1	19-Apr-2014 02:37
Isopropylbenzene	ND		0.0010	mg/L	1	19-Apr-2014 02:37
Methylcyclohexane	ND		0.0010	mg/L	1	19-Apr-2014 02:37
Naphthalene	ND		0.0010	mg/L	1	19-Apr-2014 02:37
n-Butylbenzene	ND		0.0010	mg/L	1	19-Apr-2014 02:37
n-Propylbenzene	ND		0.0010	mg/L	1	19-Apr-2014 02:37
Toluene	ND		0.0010	mg/L	1	19-Apr-2014 02:37
Xylenes, Total	ND		0.0030	mg/L	1	19-Apr-2014 02:37
Surr: 1,2-Dichloroethane-d4	*92.1*		*71-125*	*%REC*	*1*	*19-Apr-2014 02:37*
Surr: 4-Bromofluorobenzene	*96.8*		*70-125*	*%REC*	*1*	*19-Apr-2014 02:37*
Surr: Dibromofluoromethane	*95.1*		*74-125*	*%REC*	*1*	*19-Apr-2014 02:37*
Surr: Toluene-d8	*98.0*		*75-125*	*%REC*	*1*	*19-Apr-2014 02:37*

Note: See Qualifiers Page for a list of qualifiers and their explanation.

ANALYTICAL REPORT

Client: Apex Companies
Project: E3CE-0065 Andover Release Site
Sample ID: Trip Blank-7
Collection Date: 07-Apr-2014 00:00

WorkOrder:HS14040491
Lab ID:HS14040491-71
Matrix:Water

ANALYSES	RESULT	QUAL	REPORT LIMIT	UNITS	DILUTION FACTOR	DATE ANALYZED
LOW LEVEL VOLATILES - SW8260C		**Method:SW8260**				Analyst: AKP
1,2,4-Trimethylbenzene	ND		0.0010	mg/L	1	18-Apr-2014 03:26
1,2-Dichloroethane	ND		0.0010	mg/L	1	18-Apr-2014 03:26
1,3,5-Trimethylbenzene	ND		0.0010	mg/L	1	18-Apr-2014 03:26
2-Butanone	ND		0.0020	mg/L	1	18-Apr-2014 03:26
Benzene	ND		0.0010	mg/L	1	18-Apr-2014 03:26
Cyclohexane	ND		0.0010	mg/L	1	18-Apr-2014 03:26
Ethylbenzene	ND		0.0010	mg/L	1	18-Apr-2014 03:26
Isopropylbenzene	ND		0.0010	mg/L	1	18-Apr-2014 03:26
Methylcyclohexane	ND		0.0010	mg/L	1	18-Apr-2014 03:26
Naphthalene	ND		0.0010	mg/L	1	18-Apr-2014 03:26
n-Butylbenzene	ND		0.0010	mg/L	1	18-Apr-2014 03:26
n-Propylbenzene	ND		0.0010	mg/L	1	18-Apr-2014 03:26
Toluene	ND		0.0010	mg/L	1	18-Apr-2014 03:26
Xylenes, Total	ND		0.0030	mg/L	1	18-Apr-2014 03:26
Surr: 1,2-Dichloroethane-d4	*91.0*		*71-125*	*%REC*	*1*	*18-Apr-2014 03:26*
Surr: 4-Bromofluorobenzene	*98.7*		*70-125*	*%REC*	*1*	*18-Apr-2014 03:26*
Surr: Dibromofluoromethane	*91.6*		*74-125*	*%REC*	*1*	*18-Apr-2014 03:26*
Surr: Toluene-d8	*95.6*		*75-125*	*%REC*	*1*	*18-Apr-2014 03:26*

Note: See Qualifiers Page for a list of qualifiers and their explanation.

Client: Apex Companies
Project: E3CE-0065 Andover Release Site
WorkOrder: HS14040491

DATES REPORT

Sample ID	Client Samp ID	Collection Date	TCLP Date	Prep Date	Analysis Date	DF
Batch ID R231873	**Test Name :** VOLATILES - SW8260C			**Matrix:** Soil		
HS14040491-01	B-2(2-6)	07 Apr 2014 15:30			15 Apr 2014 22:17	1
HS14040491-02	B-2(13)	07 Apr 2014 16:00			15 Apr 2014 22:44	1
HS14040491-06	B-3 (5.0)	08 Apr 2014 09:25			15 Apr 2014 19:33	1
HS14040491-13	B-4(14)	08 Apr 2014 11:55			15 Apr 2014 20:01	1
HS14040491-17	B-5(5)	08 Apr 2014 13:15			15 Apr 2014 20:29	1
HS14040491-23	B-5(24)	08 Apr 2014 15:30			15 Apr 2014 20:56	1
HS14040491-25	B-8(10)	08 Apr 2014 16:30			15 Apr 2014 21:23	1
HS14040491-26	B-8(15)	08 Apr 2014 17:00			15 Apr 2014 21:50	1
Batch ID R231925	**Test Name :** VOLATILES - SW8260C			**Matrix:** Soil		
HS14040491-11	B-4(4)	08 Apr 2014 11:05			16 Apr 2014 03:03	1
HS14040491-36	B-7(4)	09 Apr 2014 10:50			15 Apr 2014 21:38	1
HS14040491-43	B-9(15)	09 Apr 2014 14:05			15 Apr 2014 23:11	1
HS14040491-44	B-9(18)	09 Apr 2014 14:20			16 Apr 2014 00:21	1
HS14040491-46	B-10(4)	09 Apr 2014 15:15			16 Apr 2014 00:44	1
HS14040491-47	B-10(10)	09 Apr 2014 15:40			16 Apr 2014 01:07	1
HS14040491-53	B-11(14.5)	09 Apr 2014 17:25			16 Apr 2014 01:54	1
HS14040491-56	B-12(10)	10 Apr 2014 09:10			16 Apr 2014 02:40	1
Batch ID R232017	**Test Name :** VOLATILES - SW8260C			**Matrix:** Soil		
HS14040491-08	B-3(11.0)	08 Apr 2014 10:00			16 Apr 2014 23:38	1
HS14040491-16	B-4(20)	08 Apr 2014 12:45			17 Apr 2014 02:21	1
HS14040491-30	B-6(4)	09 Apr 2014 09:05			17 Apr 2014 00:24	1
HS14040491-42	B--9(10)	09 Apr 2014 13:50			17 Apr 2014 00:01	1
HS14040491-54	B-11(20)	09 Apr 2014 17:40			17 Apr 2014 01:57	1
HS14040491-64	B-13(19)	10 Apr 2014 12:00			17 Apr 2014 03:07	1

Client: Apex Companies
Project: E3CE-0065 Andover Release Site
WorkOrder: HS14040491

DATES REPORT

Sample ID	Client Samp ID	Collection Date	TCLP Date	Prep Date	Analysis Date	DF
Batch ID R232049	**Test Name :** VOLATILES - SW8260C			**Matrix:** Soil		
HS14040491-04	B-2(17)	07 Apr 2014 17:00			17 Apr 2014 14:52	45.5
HS14040491-05	B-2(20)	07 Apr 2014 17:15			17 Apr 2014 15:19	94
HS14040491-08	B-3(11.0)	08 Apr 2014 10:00			17 Apr 2014 17:07	48
HS14040491-10	B-3(20)	08 Apr 2014 10:40			17 Apr 2014 17:35	4900
HS14040491-15	B-4(16.5)	08 Apr 2014 12:25			17 Apr 2014 18:02	465
HS14040491-19	B-5(11.5)	08 Apr 2014 13:50			17 Apr 2014 19:49	54
HS14040491-20	B-5(15)	08 Apr 2014 14:25			17 Apr 2014 20:16	99
HS14040491-28	B-8(18.5)	08 Apr 2014 17:25			17 Apr 2014 18:29	114
HS14040491-31	B-6(9)	09 Apr 2014 09:20			17 Apr 2014 18:55	950
HS14040491-32	B-6(15)	09 Apr 2014 09:45			17 Apr 2014 19:22	570
HS14040491-34	B-6(20)	09 Apr 2014 10:10			17 Apr 2014 20:44	490
HS14040491-38	B-7(11.5)	09 Apr 2014 11:20			17 Apr 2014 21:11	980
HS14040491-39	B-7(15.5)	09 Apr 2014 11:35			17 Apr 2014 21:38	101
HS14040491-40	B-7(19)	09 Apr 2014 12:00			17 Apr 2014 22:05	1280
HS14040491-48	B-10(14.5)	09 Apr 2014 16:00			17 Apr 2014 22:33	385
HS14040491-58	B-12(15)	10 Apr 2014 09:45			17 Apr 2014 23:01	1000
Batch ID R232090	**Test Name :** VOLATILES - SW8260C			**Matrix:** Soil		
HS14040491-50	B-10(20)	09 Apr 2014 16:20			18 Apr 2014 00:58	1
HS14040491-52	B-11(10)	09 Apr 2014 17:05			18 Apr 2014 01:22	1
HS14040491-59	B-12(18)	10 Apr 2014 10:00			18 Apr 2014 01:45	1
HS14040491-61	B-13(10)	10 Apr 2014 11:15			17 Apr 2014 21:28	1
Batch ID R232098	**Test Name :** LOW LEVEL VOLATILES - SW8260C			**Matrix:** Water		
HS14040491-71	Trip Blank-7	07 Apr 2014 00:00			18 Apr 2014 03:26	1
Batch ID R232109	**Test Name :** VOLATILES - SW8260C			**Matrix:** Soil		
HS14040491-30	B-6(4)	09 Apr 2014 09:05			18 Apr 2014 14:32	49
HS14040491-46	B-10(4)	09 Apr 2014 15:15			18 Apr 2014 14:58	48
HS14040491-47	B-10(10)	09 Apr 2014 15:40			18 Apr 2014 15:26	50
HS14040491-54	B-11(20)	09 Apr 2014 17:40			18 Apr 2014 10:30	44
Batch ID R232170	**Test Name :** LOW LEVEL VOLATILES - SW8260C			**Matrix:** Water		
HS14040491-65	Trip Blank-1	07 Apr 2014 00:00			19 Apr 2014 00:34	1
HS14040491-66	Trip Blank-2	07 Apr 2014 00:00			19 Apr 2014 00:59	1
HS14040491-67	Trip Blank-3	07 Apr 2014 00:00			19 Apr 2014 01:24	1
HS14040491-68	Trip Blank-4	07 Apr 2014 00:00			19 Apr 2014 01:48	1
HS14040491-69	Trip Blank-5	07 Apr 2014 00:00			19 Apr 2014 02:13	1
HS14040491-70	Trip Blank-6	07 Apr 2014 00:00			19 Apr 2014 02:37	1

Client: Apex Companies
Project: E3CE-0065 Andover Release Site
WorkOrder: HS14040491

DATES REPORT

Sample ID	Client Samp ID	Collection Date	TCLP Date	Prep Date	Analysis Date	DF
Batch ID R232188	**Test Name :** VOLATILES - SW8260C			**Matrix:** Soil		
HS14040491-62	B-13(13)	10 Apr 2014 11:30			20 Apr 2014 00:23	1
Batch ID R232212	**Test Name :** VPH - IOWA OA-1			**Matrix:** Soil		
HS14040491-01	B-2(2-6)	07 Apr 2014 15:30			21 Apr 2014 12:40	1
HS14040491-02	B-2(13)	07 Apr 2014 16:00			21 Apr 2014 12:59	1
HS14040491-04	B-2(17)	07 Apr 2014 17:00			21 Apr 2014 13:18	1
HS14040491-05	B-2(20)	07 Apr 2014 17:15			21 Apr 2014 13:37	1
HS14040491-06	B-3 (5.0)	08 Apr 2014 09:25			21 Apr 2014 14:14	1
HS14040491-08	B-3(11.0)	08 Apr 2014 10:00			21 Apr 2014 14:52	1
HS14040491-11	B-4(4)	08 Apr 2014 11:05			21 Apr 2014 15:11	1
HS14040491-13	B-4(14)	08 Apr 2014 11:55			21 Apr 2014 15:30	1
HS14040491-16	B-4(20)	08 Apr 2014 12:45			21 Apr 2014 13:55	1
HS14040491-17	B-5(5)	08 Apr 2014 13:15			21 Apr 2014 15:48	1
HS14040491-23	B-5(24)	08 Apr 2014 15:30			21 Apr 2014 16:19	1
HS14040491-25	B-8(10)	08 Apr 2014 16:30			21 Apr 2014 16:45	1
HS14040491-26	B-8(15)	08 Apr 2014 17:00			21 Apr 2014 17:04	1
HS14040491-30	B-6(4)	09 Apr 2014 09:05			21 Apr 2014 17:23	1
HS14040491-36	B-7(4)	09 Apr 2014 10:50			21 Apr 2014 18:00	1
Batch ID R232294	**Test Name :** VPH - IOWA OA-1			**Matrix:** Soil		
HS14040491-15	B-4(16.5)	08 Apr 2014 12:25			21 Apr 2014 22:24	100
HS14040491-19	B-5(11.5)	08 Apr 2014 13:50			21 Apr 2014 22:42	100
HS14040491-20	B-5(15)	08 Apr 2014 14:25			21 Apr 2014 23:00	100
HS14040491-28	B-8(18.5)	08 Apr 2014 17:25			21 Apr 2014 23:18	100
HS14040491-31	B-6(9)	09 Apr 2014 09:20			21 Apr 2014 23:55	100
HS14040491-32	B-6(15)	09 Apr 2014 09:45			22 Apr 2014 00:13	100
Batch ID R232366	**Test Name :** VPH - IOWA OA-1			**Matrix:** Soil		
HS14040491-42	B--9(10)	09 Apr 2014 13:50			22 Apr 2014 15:22	1
HS14040491-44	B-9(18)	09 Apr 2014 14:20			22 Apr 2014 15:41	1
HS14040491-46	B-10(4)	09 Apr 2014 15:15			22 Apr 2014 16:00	1
HS14040491-47	B-10(10)	09 Apr 2014 15:40			22 Apr 2014 16:19	1
HS14040491-50	B-10(20)	09 Apr 2014 16:20			22 Apr 2014 16:38	1
HS14040491-52	B-11(10)	09 Apr 2014 17:05			22 Apr 2014 16:57	1
HS14040491-53	B-11(14.5)	09 Apr 2014 17:25			22 Apr 2014 17:15	1
HS14040491-56	B-12(10)	10 Apr 2014 09:10			22 Apr 2014 18:50	1
HS14040491-59	B-12(18)	10 Apr 2014 10:00			22 Apr 2014 19:09	1
HS14040491-61	B-13(10)	10 Apr 2014 11:15			22 Apr 2014 19:27	1
HS14040491-62	B-13(13)	10 Apr 2014 11:30			22 Apr 2014 19:46	1
HS14040491-64	B-13(19)	10 Apr 2014 12:00			22 Apr 2014 20:05	1

Client: Apex Companies
Project: E3CE-0065 Andover Release Site
WorkOrder: HS14040491

DATES REPORT

Sample ID	Client Samp ID	Collection Date	TCLP Date	Prep Date	Analysis Date	DF
Batch ID R232370	**Test Name :** VPH - IOWA OA-1			**Matrix:** Soil		
HS14040491-10	B-3(20)	08 Apr 2014 10:40			22 Apr 2014 18:53	1000
HS14040491-34	B-6(20)	09 Apr 2014 10:10			22 Apr 2014 19:09	100
Batch ID R232379	**Test Name :** VPH - IOWA OA-1			**Matrix:** Soil		
HS14040491-38	B-7(11.5)	09 Apr 2014 11:20			22 Apr 2014 21:16	100
HS14040491-39	B-7(15.5)	09 Apr 2014 11:35			22 Apr 2014 21:32	100
HS14040491-40	B-7(19)	09 Apr 2014 12:00			22 Apr 2014 21:48	100
HS14040491-43	B-9(15)	09 Apr 2014 14:05			22 Apr 2014 22:04	100
HS14040491-48	B-10(14.5)	09 Apr 2014 16:00			22 Apr 2014 22:20	100
HS14040491-54	B-11(20)	09 Apr 2014 17:40			22 Apr 2014 22:36	100
HS14040491-58	B-12(15)	10 Apr 2014 09:45			22 Apr 2014 23:07	100

Client: Apex Companies
WorkOrder: HS14040491
Project: E3CE-0065 Andover Release Site

QC BATCH REPORT

Batch ID: R232212 **Instrument: FID-9** **Method: IA OA-1**

MBLK Sample ID: **GBLKS-140409** Units: **mg/Kg** Analysis Date: **21-Apr-2014 11:53**
Client ID: Run ID: **FID-9_232212** SeqNo: **2801441** PrepDate: DF: **1**

Analyte	Result	PQL	SPK Val	SPK Ref Value	%REC	Control Limit	RPD Ref Value	%RPD	RPD Limit	Qual
VPH - Gasoline Range Organics	ND	0.050								
Surr: 4-Bromofluorobenzene	*0.1149*	*0.0050*	*0.1*	*0*	*115*	*70 - 130*				

LCS Sample ID: **GLCSS-140421** Units: **mg/Kg** Analysis Date: **21-Apr-2014 12:12**
Client ID: Run ID: **FID-9_232212** SeqNo: **2801442** PrepDate: DF: **1**

Analyte	Result	PQL	SPK Val	SPK Ref Value	%REC	Control Limit	RPD Ref Value	%RPD	RPD Limit	Qual
VPH - Gasoline Range Organics	1.048	0.050	1	0	105	70 - 130				
Surr: 4-Bromofluorobenzene	*0.1177*	*0.0050*	*0.1*	*0*	*118*	*70 - 130*				

MS Sample ID: **HS14040758-03MS** Units: **mg/Kg** Analysis Date: **21-Apr-2014 18:57**
Client ID: Run ID: **FID-9_232212** SeqNo: **2802220** PrepDate: DF: **1**

Analyte	Result	PQL	SPK Val	SPK Ref Value	%REC	Control Limit	RPD Ref Value	%RPD	RPD Limit	Qual
VPH - Gasoline Range Organics	1.136	0.050	1	0	114	70 - 130				
Surr: 4-Bromofluorobenzene	*0.1028*	*0.0050*	*0.1*	*0*	*103*	*70 - 130*				

MSD Sample ID: **HS14040758-03MSD** Units: **mg/Kg** Analysis Date: **21-Apr-2014 19:17**
Client ID: Run ID: **FID-9_232212** SeqNo: **2802221** PrepDate: DF: **1**

Analyte	Result	PQL	SPK Val	SPK Ref Value	%REC	Control Limit	RPD Ref Value	%RPD	RPD Limit	Qual
VPH - Gasoline Range Organics	1.042	0.050	1	0	104	70 - 130	1.136	8.61	30	
Surr: 4-Bromofluorobenzene	*0.09144*	*0.0050*	*0.1*	*0*	*91.4*	*70 - 130*	*0.1028*	*11.7*	*30*	

The following samples were anayzed in this batch:

HS14040491-01	HS14040491-02	HS14040491-04	HS14040491-05
HS14040491-06	HS14040491-08	HS14040491-11	HS14040491-13
HS14040491-16	HS14040491-17	HS14040491-23	HS14040491-25
HS14040491-26	HS14040491-30	HS14040491-36	

Note: See Qualifiers Page for a list of qualifiers and their explanation.

Client: Apex Companies
WorkOrder: HS14040491
Project: E3CE-0065 Andover Release Site

QC BATCH REPORT

Batch ID: R232294 **Instrument: FID-9** **Method: IA OA-1**

MBLK Sample ID: **GBLKM-140421** Units: **mg/Kg** Analysis Date: **21-Apr-2014 21:30**
Client ID: Run ID: **FID-9_232294** SeqNo: **2802720** PrepDate: DF: **50**

Analyte	Result	PQL	SPK Val	SPK Ref Value	%REC	Control Limit	RPD Ref Value	%RPD	RPD Limit	Qual
VPH - Gasoline Range Organics	ND	2.5								
Surr: 4-Bromofluorobenzene	*5.449*	*0.25*	*5*	*0*	*109*	*70 - 130*				

LCS Sample ID: **GLCSW-140421** Units: **mg/L** Analysis Date: **21-Apr-2014 21:12**
Client ID: Run ID: **FID-9_232294** SeqNo: **2802719** PrepDate: DF: **1**

Analyte	Result	PQL	SPK Val	SPK Ref Value	%REC	Control Limit	RPD Ref Value	%RPD	RPD Limit	Qual
VPH - Gasoline Range Organics	1.075	0.050	1	0	107	70 - 130				
Surr: 4-Bromofluorobenzene	*0.1145*	*0.0050*	*0.1*	*0*	*114*	*70 - 130*				

LCSD Sample ID: **GLCSDW1-140421** Units: **mg/Kg** Analysis Date: **22-Apr-2014 12:46**
Client ID: Run ID: **FID-9_232294** SeqNo: **2803802** PrepDate: DF: **1**

Analyte	Result	PQL	SPK Val	SPK Ref Value	%REC	Control Limit	RPD Ref Value	%RPD	RPD Limit	Qual
VPH - Gasoline Range Organics	1.044	0.050	1	0	104	70 - 130	0	0	30	
Surr: 4-Bromofluorobenzene	*0.1195*	*0.0050*	*0.1*	*0*	*120*	*70 - 130*	*0*	*0*	*30*	

MS Sample ID: **HS14040529-08MS** Units: **mg/Kg** Analysis Date: **22-Apr-2014 11:12**
Client ID: Run ID: **FID-9_232294** SeqNo: **2803800** PrepDate: DF: **1**

Analyte	Result	PQL	SPK Val	SPK Ref Value	%REC	Control Limit	RPD Ref Value	%RPD	RPD Limit	Qual
VPH - Gasoline Range Organics	0.9625	0.050	1	0.03092	93.2	70 - 130				
Surr: 4-Bromofluorobenzene	*0.01187*	*0.0050*	*0.1*	*0*	*11.9*	*70 - 130*				S

MSD Sample ID: **HS14040529-08MSD** Units: **mg/Kg** Analysis Date: **22-Apr-2014 11:31**
Client ID: Run ID: **FID-9_232294** SeqNo: **2803801** PrepDate: DF: **1**

Analyte	Result	PQL	SPK Val	SPK Ref Value	%REC	Control Limit	RPD Ref Value	%RPD	RPD Limit	Qual
VPH - Gasoline Range Organics	0.9129	0.050	1	0.03092	88.2	70 - 130	0.9625	5.3	30	
Surr: 4-Bromofluorobenzene	*0.01185*	*0.0050*	*0.1*	*0*	*11.9*	*70 - 130*	*0.01187*	*0.177*	*30*	S

Note: See Qualifiers Page for a list of qualifiers and their explanation.

ALS Group USA, Corp Date: 28-Apr-14

Client: Apex Companies
WorkOrder: HS14040491
Project: E3CE-0065 Andover Release Site

QC BATCH REPORT

Batch ID: R232294 **Instrument: FID-9** **Method: IA OA-1**

The following samples were anayzed in this batch:

HS14040491-15	HS14040491-19	HS14040491-20	HS14040491-28
HS14040491-31	HS14040491-32		

Note: See Qualifiers Page for a list of qualifiers and their explanation.

Client: Apex Companies
WorkOrder: HS14040491
Project: E3CE-0065 Andover Release Site

QC BATCH REPORT

Batch ID: R232366 **Instrument: FID-9** **Method: IA OA-1**

MBLK Sample ID: **GBLKS-140422** Units: **mg/Kg** Analysis Date: **22-Apr-2014 15:03**
Client ID: Run ID: **FID-9_232366** SeqNo: **2804613** PrepDate: DF: **1**

Analyte	Result	PQL	SPK Val	SPK Ref Value	%REC	Control Limit	RPD Ref Value	%RPD	RPD Limit	Qual
VPH - Gasoline Range Organics	ND	0.050								
Surr: 4-Bromofluorobenzene	*0.1036*	*0.0050*	*0.1*	*0*	*104*	*70 - 130*				

LCS Sample ID: **GLCSS-140422** Units: **mg/Kg** Analysis Date: **22-Apr-2014 13:50**
Client ID: Run ID: **FID-9_232366** SeqNo: **2804612** PrepDate: DF: **1**

Analyte	Result	PQL	SPK Val	SPK Ref Value	%REC	Control Limit	RPD Ref Value	%RPD	RPD Limit	Qual
VPH - Gasoline Range Organics	1.201	0.050	1	0	120	70 - 130				
Surr: 4-Bromofluorobenzene	*0.1153*	*0.0050*	*0.1*	*0*	*115*	*70 - 130*				

MS Sample ID: **HS14040758-04MS** Units: **mg/Kg** Analysis Date: **22-Apr-2014 18:12**
Client ID: Run ID: **FID-9_232366** SeqNo: **2804623** PrepDate: DF: **1**

Analyte	Result	PQL	SPK Val	SPK Ref Value	%REC	Control Limit	RPD Ref Value	%RPD	RPD Limit	Qual
VPH - Gasoline Range Organics	1.034	0.050	1	0	103	70 - 130				
Surr: 4-Bromofluorobenzene	*0.1132*	*0.0050*	*0.1*	*0*	*113*	*70 - 130*				

MSD Sample ID: **HS14040758-04MSD** Units: **mg/Kg** Analysis Date: **22-Apr-2014 18:31**
Client ID: Run ID: **FID-9_232366** SeqNo: **2804624** PrepDate: DF: **1**

Analyte	Result	PQL	SPK Val	SPK Ref Value	%REC	Control Limit	RPD Ref Value	%RPD	RPD Limit	Qual
VPH - Gasoline Range Organics	1.055	0.050	1	0	105	70 - 130	1.034	1.93	30	
Surr: 4-Bromofluorobenzene	*0.09617*	*0.0050*	*0.1*	*0*	*96.2*	*70 - 130*	*0.1132*	*16.3*	*30*	

The following samples were anayzed in this batch:

HS14040491-42	HS14040491-44	HS14040491-46	HS14040491-47
HS14040491-50	HS14040491-52	HS14040491-53	HS14040491-56
HS14040491-59	HS14040491-61	HS14040491-62	HS14040491-64

Note: See Qualifiers Page for a list of qualifiers and their explanation.

Client: Apex Companies
WorkOrder: HS14040491
Project: E3CE-0065 Andover Release Site

QC BATCH REPORT

Batch ID: R232370 **Instrument: FID-14** **Method: IA OA-1**

MBLK Sample ID: **GBLKM1-140422** Units: **mg/Kg** Analysis Date: **22-Apr-2014 15:58**
Client ID: Run ID: **FID-14_232370** SeqNo: **2804796** PrepDate: DF: **1**

Analyte	Result	PQL	SPK Val	SPK Ref Value	%REC	Control Limit	RPD Ref Value	%RPD	RPD Limit	Qual
VPH - Gasoline Range Organics	ND	0.050								
Surr: 4-Bromofluorobenzene	*0.1006*	*0.0050*	*0.1*	*0*	*101*	*70 - 130*				

LCS Sample ID: **GLCSW1-140422** Units: **mg/L** Analysis Date: **22-Apr-2014 13:20**
Client ID: Run ID: **FID-14_232370** SeqNo: **2804766** PrepDate: DF: **1**

Analyte	Result	PQL	SPK Val	SPK Ref Value	%REC	Control Limit	RPD Ref Value	%RPD	RPD Limit	Qual
VPH - Gasoline Range Organics	0.9021	0.050	1	0	90.2	70 - 130				
Surr: 4-Bromofluorobenzene	*0.1018*	*0.0050*	*0.1*	*0*	*102*	*70 - 130*				

MS Sample ID: **HS14040557-13MS** Units: **mg/Kg** Analysis Date: **22-Apr-2014 14:39**
Client ID: Run ID: **FID-14_232370** SeqNo: **2804793** PrepDate: DF: **1**

Analyte	Result	PQL	SPK Val	SPK Ref Value	%REC	Control Limit	RPD Ref Value	%RPD	RPD Limit	Qual
VPH - Gasoline Range Organics	0.8987	0.050	1	0	89.9	70 - 130				
Surr: 4-Bromofluorobenzene	*0.1028*	*0.0050*	*0.1*	*0*	*103*	*70 - 130*				

MSD Sample ID: **HS14040557-13MSD** Units: **mg/Kg** Analysis Date: **22-Apr-2014 14:55**
Client ID: Run ID: **FID-14_232370** SeqNo: **2804794** PrepDate: DF: **1**

Analyte	Result	PQL	SPK Val	SPK Ref Value	%REC	Control Limit	RPD Ref Value	%RPD	RPD Limit	Qual
VPH - Gasoline Range Organics	0.8124	0.050	1	0	81.2	70 - 130	0.8987	10.1	30	
Surr: 4-Bromofluorobenzene	*0.1054*	*0.0050*	*0.1*	*0*	*105*	*70 - 130*	*0.1028*	*2.56*	*30*	

The following samples were anayzed in this batch: HS14040491-10 HS14040491-34

Note: See Qualifiers Page for a list of qualifiers and their explanation.

Client: Apex Companies
WorkOrder: HS14040491
Project: E3CE-0065 Andover Release Site

QC BATCH REPORT

Batch ID: R232379 **Instrument: FID-14** **Method: IA OA-1**

MBLK Sample ID: **GBLKM1-140411** Units: **mg/Kg** Analysis Date: **22-Apr-2014 20:45**
Client ID: Run ID: **FID-14_232379** SeqNo: **2805012** PrepDate: DF: **50**

Analyte	Result	PQL	SPK Val	SPK Ref Value	%REC	Control Limit	RPD Ref Value	%RPD	RPD Limit	Qual
VPH - Gasoline Range Organics	ND	2.5								
Surr: 4-Bromofluorobenzene	*5.024*	*0.25*	*5*	*0*	*100*	*70 - 130*				

LCS Sample ID: **GLCSW1-140411** Units: **mg/L** Analysis Date: **22-Apr-2014 20:29**
Client ID: Run ID: **FID-14_232379** SeqNo: **2805003** PrepDate: DF: **1**

Analyte	Result	PQL	SPK Val	SPK Ref Value	%REC	Control Limit	RPD Ref Value	%RPD	RPD Limit	Qual
VPH - Gasoline Range Organics	0.8884	0.050	1	0	88.8	70 - 130				
Surr: 4-Bromofluorobenzene	*0.1046*	*0.0050*	*0.1*	*0*	*105*	*70 - 130*				

MS Sample ID: **HS14040529-18MS** Units: **mg/Kg** Analysis Date: **22-Apr-2014 23:39**
Client ID: Run ID: **FID-14_232379** SeqNo: **2805022** PrepDate: DF: **1**

Analyte	Result	PQL	SPK Val	SPK Ref Value	%REC	Control Limit	RPD Ref Value	%RPD	RPD Limit	Qual
VPH - Gasoline Range Organics	0.9225	0.050	1	0.08094	84.2	70 - 130				
Surr: 4-Bromofluorobenzene	*0.105*	*0.0050*	*0.1*	*0*	*105*	*70 - 130*				

MSD Sample ID: **HS14040529-18MSD** Units: **mg/Kg** Analysis Date: **22-Apr-2014 23:55**
Client ID: Run ID: **FID-14_232379** SeqNo: **2805023** PrepDate: DF: **1**

Analyte	Result	PQL	SPK Val	SPK Ref Value	%REC	Control Limit	RPD Ref Value	%RPD	RPD Limit	Qual
VPH - Gasoline Range Organics	0.8612	0.050	1	0.08094	78.0	70 - 130	0.9225	6.87	30	
Surr: 4-Bromofluorobenzene	*0.1043*	*0.0050*	*0.1*	*0*	*104*	*70 - 130*	*0.105*	*0.617*	*30*	

The following samples were anayzed in this batch: HS14040491-38 HS14040491-39 HS14040491-40 HS14040491-43 HS14040491-48 HS14040491-54 HS14040491-58

Note: See Qualifiers Page for a list of qualifiers and their explanation.

Client: Apex Companies
WorkOrder: HS14040491
Project: E3CE-0065 Andover Release Site

QC BATCH REPORT

Batch ID: R231873 **Instrument: VOA3** **Method: SW8260**

MBLK Sample ID: **VBLKS1-041514** Units: **ug/Kg** Analysis Date: **15-Apr-2014 13:39**
Client ID: Run ID: **VOA3_231873** SeqNo: **2792082** PrepDate: DF: **1**

Analyte	Result	PQL	SPK Val	SPK Ref Value	%REC	Control Limit	RPD Ref Value	%RPD	RPD Limit	Qual
1,2,4-Trimethylbenzene	ND	5.0								
1,2-Dichloroethane	ND	5.0								
1,3,5-Trimethylbenzene	ND	5.0								
2-Butanone	ND	10								
Benzene	ND	5.0								
Cyclohexane	ND	5.0								
Ethylbenzene	ND	5.0								
Isopropylbenzene	ND	5.0								
Methylcyclohexane	ND	5.0								
Naphthalene	ND	5.0								
n-Butylbenzene	ND	5.0								
n-Propylbenzene	ND	5.0								
Toluene	ND	5.0								
Xylenes, Total	ND	10								
Surr: 1,2-Dichloroethane-d4	*43.43*	*5.0*	*50*	*0*	*86.9*	*70 - 128*				
Surr: 4-Bromofluorobenzene	*49.21*	*5.0*	*50*	*0*	*98.4*	*73 - 126*				
Surr: Dibromofluoromethane	*45.34*	*5.0*	*50*	*0*	*90.7*	*71 - 128*				
Surr: Toluene-d8	*57.25*	*5.0*	*50*	*0*	*115*	*73 - 127*				

Note: See Qualifiers Page for a list of qualifiers and their explanation.

Client: Apex Companies
WorkOrder: HS14040491
Project: E3CE-0065 Andover Release Site

QC BATCH REPORT

Batch ID: R231873 **Instrument: VOA3** **Method: SW8260**

LCS Sample ID: **VLCSS1-041514** Units: **ug/Kg** Analysis Date: **15-Apr-2014 12:46**
Client ID: Run ID: **VOA3_231873** SeqNo: **2792081** PrepDate: DF: **1**

Analyte	Result	PQL	SPK Val	SPK Ref Value	%REC	Control Limit	RPD Ref Value	%RPD	RPD Limit	Qual
1,2,4-Trimethylbenzene	40.65	5.0	50	0	81.3	79 - 123				
1,2-Dichloroethane	41.1	5.0	50	0	82.2	73 - 121				
1,3,5-Trimethylbenzene	47.84	5.0	50	0	95.7	70 - 123				
2-Butanone	81.91	10	100	0	81.9	65 - 130				
Benzene	47.47	5.0	50	0	94.9	79 - 120				
Cyclohexane	40.75	5.0	50	0	81.5	74 - 126				
Ethylbenzene	47.06	5.0	50	0	94.1	80 - 122				
Isopropylbenzene	36.04	5.0	50	0	72.1	72 - 127				
Methylcyclohexane	40.15	5.0	50	0	80.3	77 - 126				
Naphthalene	48.77	5.0	50	0	97.5	71 - 128				
n-Butylbenzene	46	5.0	50	0	92.0	77 - 126				
n-Propylbenzene	44.32	5.0	50	0	88.6	79 - 123				
Toluene	43.27	5.0	50	0	86.5	79 - 120				
Xylenes, Total	130.6	10	150	0	87.1	80 - 120				
Surr: 1,2-Dichloroethane-d4	*49.18*	*5.0*	*50*	*0*	*98.4*	*70 - 128*				
Surr: 4-Bromofluorobenzene	*45.29*	*5.0*	*50*	*0*	*90.6*	*73 - 126*				
Surr: Dibromofluoromethane	*50.9*	*5.0*	*50*	*0*	*102*	*71 - 128*				
Surr: Toluene-d8	*59.57*	*5.0*	*50*	*0*	*119*	*73 - 127*				

Note: See Qualifiers Page for a list of qualifiers and their explanation.

Client: Apex Companies
WorkOrder: HS14040491
Project: E3CE-0065 Andover Release Site

QC BATCH REPORT

Batch ID: R231873 **Instrument: VOA3** **Method: SW8260**

MS Sample ID: **HS14040547-01MS** Units: **ug/Kg** Analysis Date: **15-Apr-2014 15:27**
Client ID: Run ID: **VOA3_231873** SeqNo: **2793236** PrepDate: DF: **1**

Analyte	Result	PQL	SPK Val	SPK Ref Value	%REC	Control Limit	RPD Ref Value	%RPD	RPD Limit	Qual
1,2,4-Trimethylbenzene	55.87	5.0	50	0	112	79 - 123				
1,2-Dichloroethane	48.45	5.0	50	0	96.9	73 - 121				
1,3,5-Trimethylbenzene	61.27	5.0	50	0	123	70 - 123				
2-Butanone	118.2	10	100	0	118	65 - 130				
Benzene	59.78	5.0	50	0	120	79 - 120				
Cyclohexane	58.96	5.0	50	0	118	74 - 126				
Ethylbenzene	61.65	5.0	50	0	123	80 - 122				S
Isopropylbenzene	76.77	5.0	50	0	154	72 - 127				S
Methylcyclohexane	61.36	5.0	50	0	123	77 - 126				
Naphthalene	47.97	5.0	50	0	95.9	71 - 128				
n-Butylbenzene	62.76	5.0	50	0	126	77 - 126				
n-Propylbenzene	60.32	5.0	50	0	121	79 - 123				
Toluene	59.59	5.0	50	0	119	79 - 120				
Xylenes, Total	186.1	10	150	0	124	80 - 120				S
Surr: 1,2-Dichloroethane-d4	*44.89*	*5.0*	*50*	*0*	*89.8*	*70 - 128*				
Surr: 4-Bromofluorobenzene	*52.44*	*5.0*	*50*	*0*	*105*	*73 - 126*				
Surr: Dibromofluoromethane	*50.18*	*5.0*	*50*	*0*	*100*	*71 - 128*				
Surr: Toluene-d8	*56.89*	*5.0*	*50*	*0*	*114*	*73 - 127*				

Note: See Qualifiers Page for a list of qualifiers and their explanation.

Client: Apex Companies
WorkOrder: HS14040491
Project: E3CE-0065 Andover Release Site

QC BATCH REPORT

Batch ID: R231873 **Instrument: VOA3** **Method: SW8260**

MSD Sample ID: **HS14040547-01MSD** Units: **ug/Kg** Analysis Date: **15-Apr-2014 15:55**
Client ID: Run ID: **VOA3_231873** SeqNo: **2793237** PrepDate: DF: **1**

Analyte	Result	PQL	SPK Val	SPK Ref Value	%REC	Control Limit	RPD Ref Value	%RPD	RPD Limit	Qual
1,2,4-Trimethylbenzene	56.9	5.0	50	0	114	79 - 123	55.87	1.82	30	
1,2-Dichloroethane	45.83	5.0	50	0	91.7	73 - 121	48.45	5.56	30	
1,3,5-Trimethylbenzene	65.5	5.0	50	0	131	70 - 123	61.27	6.69	30	S
2-Butanone	116.2	10	100	0	116	65 - 130	118.2	1.7	30	
Benzene	49.66	5.0	50	0	99.3	79 - 120	59.78	18.5	30	
Cyclohexane	57.04	5.0	50	0	114	74 - 126	58.96	3.3	30	
Ethylbenzene	61.32	5.0	50	0	123	80 - 122	61.65	0.539	30	S
Isopropylbenzene	74.57	5.0	50	0	149	72 - 127	76.77	2.9	30	S
Methylcyclohexane	59.43	5.0	50	0	119	77 - 126	61.36	3.19	30	
Naphthalene	45.75	5.0	50	0	91.5	71 - 128	47.97	4.75	30	
n-Butylbenzene	62.75	5.0	50	0	125	77 - 126	62.76	0.0209	30	
n-Propylbenzene	62.17	5.0	50	0	124	79 - 123	60.32	3.01	30	S
Toluene	62.63	5.0	50	0	125	79 - 120	59.59	4.97	30	S
Xylenes, Total	183.9	10	150	0	123	79 - 123	186.1	1.22	30	
Surr: 1,2-Dichloroethane-d4	*38.52*	*5.0*	*50*	*0*	*77.0*	*70 - 128*	*44.89*	*15.3*	*30*	
Surr: 4-Bromofluorobenzene	*54.75*	*5.0*	*50*	*0*	*110*	*73 - 126*	*52.44*	*4.32*	*30*	
Surr: Dibromofluoromethane	*47.6*	*5.0*	*50*	*0*	*95.2*	*71 - 128*	*50.18*	*5.29*	*30*	
Surr: Toluene-d8	*51.45*	*5.0*	*50*	*0*	*103*	*73 - 127*	*56.89*	*10.1*	*30*	

The following samples were anayzed in this batch:

HS14040491-01	HS14040491-02	HS14040491-06	HS14040491-13
HS14040491-17	HS14040491-23	HS14040491-25	HS14040491-26

Note: See Qualifiers Page for a list of qualifiers and their explanation.

Client: Apex Companies
WorkOrder: HS14040491
Project: E3CE-0065 Andover Release Site

QC BATCH REPORT

Batch ID: R231925 **Instrument: VOA5** **Method: SW8260**

MBLK Sample ID: **VBLKS2-041514** Units: **ug/Kg** Analysis Date: **15-Apr-2014 21:15**
Client ID: Run ID: **VOA5_231925** SeqNo: **2793408** PrepDate: DF: **1**

Analyte	Result	PQL	SPK Val	SPK Ref Value	%REC	Control Limit	RPD Ref Value	%RPD	RPD Limit	Qual
1,2,4-Trimethylbenzene	ND	5.0								
1,2-Dichloroethane	ND	5.0								
1,3,5-Trimethylbenzene	ND	5.0								
2-Butanone	ND	10								
Benzene	ND	5.0								
Cyclohexane	ND	5.0								
Ethylbenzene	ND	5.0								
Isopropylbenzene	ND	5.0								
Methylcyclohexane	ND	5.0								
Naphthalene	ND	5.0								
n-Butylbenzene	ND	5.0								
n-Propylbenzene	ND	5.0								
Toluene	ND	5.0								
Xylenes, Total	ND	10								
Surr: 1,2-Dichloroethane-d4	*50.07*	*5.0*	*50*	*0*	*100*	*70 - 128*				
Surr: 4-Bromofluorobenzene	*48.39*	*5.0*	*50*	*0*	*96.8*	*73 - 126*				
Surr: Dibromofluoromethane	*48.5*	*5.0*	*50*	*0*	*97.0*	*71 - 128*				
Surr: Toluene-d8	*50.68*	*5.0*	*50*	*0*	*101*	*73 - 127*				

Note: See Qualifiers Page for a list of qualifiers and their explanation.

Client: Apex Companies
WorkOrder: HS14040491
Project: E3CE-0065 Andover Release Site

QC BATCH REPORT

Batch ID: R231925 **Instrument: VOA5** **Method: SW8260**

LCS Sample ID: **VLCSS2-041514** Units: **ug/Kg** Analysis Date: **15-Apr-2014 20:28**
Client ID: Run ID: **VOA5_231925** SeqNo: **2793407** PrepDate: DF: **1**

Analyte	Result	PQL	SPK Val	SPK Ref Value	%REC	Control Limit	RPD Ref Value	%RPD	RPD Limit	Qual
1,2,4-Trimethylbenzene	47.78	5.0	50	0	95.6	79 - 123				
1,2-Dichloroethane	44.89	5.0	50	0	89.8	73 - 121				
1,3,5-Trimethylbenzene	48.33	5.0	50	0	96.7	70 - 123				
2-Butanone	92.32	10	100	0	92.3	65 - 130				
Benzene	47.76	5.0	50	0	95.5	79 - 120				
Cyclohexane	48.97	5.0	50	0	97.9	74 - 126				
Ethylbenzene	47.63	5.0	50	0	95.3	80 - 122				
Isopropylbenzene	48.72	5.0	50	0	97.4	72 - 127				
Methylcyclohexane	48.45	5.0	50	0	96.9	77 - 126				
Naphthalene	50.66	5.0	50	0	101	71 - 128				
n-Butylbenzene	47.86	5.0	50	0	95.7	77 - 126				
n-Propylbenzene	48.82	5.0	50	0	97.6	79 - 123				
Toluene	48.31	5.0	50	0	96.6	79 - 120				
Xylenes, Total	145.1	10	150	0	96.7	80 - 120				
Surr: 1,2-Dichloroethane-d4	*50.9*	*5.0*	*50*	*0*	*102*	*70 - 128*				
Surr: 4-Bromofluorobenzene	*51*	*5.0*	*50*	*0*	*102*	*73 - 126*				
Surr: Dibromofluoromethane	*49.03*	*5.0*	*50*	*0*	*98.1*	*71 - 128*				
Surr: Toluene-d8	*50.46*	*5.0*	*50*	*0*	*101*	*73 - 127*				

Note: See Qualifiers Page for a list of qualifiers and their explanation.

Client: Apex Companies
WorkOrder: HS14040491
Project: E3CE-0065 Andover Release Site

QC BATCH REPORT

Batch ID: R231925 **Instrument: VOA5** **Method: SW8260**

MS Sample ID: **HS14040491-36MS** Units: **ug/Kg** Analysis Date: **15-Apr-2014 23:34**
Client ID: **B-7(4)** Run ID: **VOA5_231925** SeqNo: **2793411** PrepDate: DF: **1**

Analyte	Result	PQL	SPK Val	SPK Ref Value	%REC	Control Limit	RPD Ref Value	%RPD	RPD Limit	Qual
1,2,4-Trimethylbenzene	53.34	5.0	50	3.226	100	79 - 123				
1,2-Dichloroethane	45.66	5.0	50	0	91.3	73 - 121				
1,3,5-Trimethylbenzene	50.06	5.0	50	1.6	96.9	70 - 123				
2-Butanone	96.94	10	100	0	96.9	65 - 130				
Benzene	51.69	5.0	50	150.9	-198	79 - 120				S
Cyclohexane	53.12	5.0	50	16.71	72.8	74 - 126				S
Ethylbenzene	50.37	5.0	50	7.213	86.3	80 - 122				
Isopropylbenzene	49.55	5.0	50	0	99.1	72 - 127				
Methylcyclohexane	49.43	5.0	50	3.304	92.3	77 - 126				
Naphthalene	43.71	5.0	50	0	87.4	71 - 128				
n-Butylbenzene	47.36	5.0	50	0	94.7	77 - 126				
n-Propylbenzene	50.03	5.0	50	1.031	98.0	79 - 123				
Toluene	51.54	5.0	50	8.22	86.6	79 - 120				
Xylenes, Total	151.3	10	150	13.63	91.8	80 - 120				
Surr: 1,2-Dichloroethane-d4	*50.71*	*5.0*	*50*	*0*	*101*	*70 - 128*				
Surr: 4-Bromofluorobenzene	*52.15*	*5.0*	*50*	*0*	*104*	*73 - 126*				
Surr: Dibromofluoromethane	*49.54*	*5.0*	*50*	*0*	*99.1*	*71 - 128*				
Surr: Toluene-d8	*50.66*	*5.0*	*50*	*0*	*101*	*73 - 127*				

Note: See Qualifiers Page for a list of qualifiers and their explanation.

Client: Apex Companies
WorkOrder: HS14040491
Project: E3CE-0065 Andover Release Site

QC BATCH REPORT

Batch ID: R231925 **Instrument: VOA5** **Method: SW8260**

MSD Sample ID: **HS14040491-36MSD** Units: **ug/Kg** Analysis Date: **15-Apr-2014 23:57**
Client ID: **B-7(4)** Run ID: **VOA5_231925** SeqNo: **2793412** PrepDate: DF: **1**

Analyte	Result	PQL	SPK Val	SPK Ref Value	%REC	Control Limit	RPD Ref Value	%RPD	RPD Limit	Qual
1,2,4-Trimethylbenzene	49.47	5.0	50	3.226	92.5	79 - 123	53.34	7.52	30	
1,2-Dichloroethane	42.96	5.0	50	0	85.9	73 - 121	45.66	6.11	30	
1,3,5-Trimethylbenzene	48.45	5.0	50	1.6	93.7	70 - 123	50.06	3.27	30	
2-Butanone	85.47	10	100	0	85.5	65 - 130	96.94	12.6	30	
Benzene	50.26	5.0	50	150.9	-201	79 - 120	51.69	2.81	30	S
Cyclohexane	52.77	5.0	50	16.71	72.1	74 - 126	53.12	0.658	30	S
Ethylbenzene	46.65	5.0	50	7.213	78.9	80 - 122	50.37	7.67	30	S
Isopropylbenzene	46.9	5.0	50	0	93.8	72 - 127	49.55	5.5	30	
Methylcyclohexane	48.9	5.0	50	3.304	91.2	77 - 126	49.43	1.08	30	
Naphthalene	39.38	5.0	50	0	78.8	71 - 128	43.71	10.4	30	
n-Butylbenzene	45.16	5.0	50	0	90.3	77 - 126	47.36	4.76	30	
n-Propylbenzene	48.37	5.0	50	1.031	94.7	79 - 123	50.03	3.37	30	
Toluene	49.09	5.0	50	8.22	81.7	79 - 120	51.54	4.86	30	
Xylenes, Total	145	10	150	13.63	87.5	79 - 123	151.3	4.31	30	
Surr: 1,2-Dichloroethane-d4	*52.43*	*5.0*	*50*	*0*	*105*	*70 - 128*	*50.71*	*3.34*	*30*	
Surr: 4-Bromofluorobenzene	*51.69*	*5.0*	*50*	*0*	*103*	*73 - 126*	*52.15*	*0.893*	*30*	
Surr: Dibromofluoromethane	*50.17*	*5.0*	*50*	*0*	*100*	*71 - 128*	*49.54*	*1.27*	*30*	
Surr: Toluene-d8	*49.93*	*5.0*	*50*	*0*	*99.9*	*73 - 127*	*50.66*	*1.46*	*30*	

The following samples were anayzed in this batch:

HS14040491-11	HS14040491-36	HS14040491-43	HS14040491-44
HS14040491-46	HS14040491-47	HS14040491-51	HS14040491-53
HS14040491-55	HS14040491-56		

Note: See Qualifiers Page for a list of qualifiers and their explanation.

Client: Apex Companies
WorkOrder: HS14040491
Project: E3CE-0065 Andover Release Site

QC BATCH REPORT

Batch ID: R232017 **Instrument: VOA5** **Method: SW8260**

MBLK Sample ID: **VBLKS2-041614** Units: **ug/Kg** Analysis Date: **16-Apr-2014 21:18**
Client ID: Run ID: **VOA5_232017** SeqNo: **2795690** PrepDate: DF: **1**

Analyte	Result	PQL	SPK Val	SPK Ref Value	%REC	Control Limit	RPD Ref Value	%RPD	RPD Limit	Qual
1,2,4-Trimethylbenzene	ND	5.0								
1,2-Dichloroethane	ND	5.0								
1,3,5-Trimethylbenzene	ND	5.0								
2-Butanone	ND	10								
Benzene	ND	5.0								
Cyclohexane	ND	5.0								
Ethylbenzene	ND	5.0								
Isopropylbenzene	ND	5.0								
Methylcyclohexane	ND	5.0								
Naphthalene	ND	5.0								
n-Butylbenzene	ND	5.0								
n-Propylbenzene	ND	5.0								
Toluene	ND	5.0								
Xylenes, Total	ND	10								
Surr: 1,2-Dichloroethane-d4	*48.78*	*5.0*	*50*	*0*	*97.6*	*70 - 128*				
Surr: 4-Bromofluorobenzene	*47.88*	*5.0*	*50*	*0*	*95.8*	*73 - 126*				
Surr: Dibromofluoromethane	*47.97*	*5.0*	*50*	*0*	*95.9*	*71 - 128*				
Surr: Toluene-d8	*49.46*	*5.0*	*50*	*0*	*98.9*	*73 - 127*				

Note: See Qualifiers Page for a list of qualifiers and their explanation.

Client: Apex Companies
WorkOrder: HS14040491
Project: E3CE-0065 Andover Release Site

QC BATCH REPORT

Batch ID: R232017 **Instrument: VOA5** **Method: SW8260**

LCS Sample ID: **VLCSS2-041614** Units: **ug/Kg** Analysis Date: **16-Apr-2014 20:32**
Client ID: Run ID: **VOA5_232017** SeqNo: **2795689** PrepDate: DF: **1**

Analyte	Result	PQL	SPK Val	SPK Ref Value	%REC	Control Limit	RPD Ref Value	%RPD	RPD Limit	Qual
1,2,4-Trimethylbenzene	47.48	5.0	50	0	95.0	79 - 123				
1,2-Dichloroethane	47.14	5.0	50	0	94.3	73 - 121				
1,3,5-Trimethylbenzene	46.57	5.0	50	0	93.1	70 - 123				
2-Butanone	97.2	10	100	0	97.2	65 - 130				
Benzene	47.58	5.0	50	0	95.2	79 - 120				
Cyclohexane	49.38	5.0	50	0	98.8	74 - 126				
Ethylbenzene	45.54	5.0	50	0	91.1	80 - 122				
Isopropylbenzene	46.32	5.0	50	0	92.6	72 - 127				
Methylcyclohexane	48.33	5.0	50	0	96.7	77 - 126				
Naphthalene	50.26	5.0	50	0	101	71 - 128				
n-Butylbenzene	46.75	5.0	50	0	93.5	77 - 126				
n-Propylbenzene	46.89	5.0	50	0	93.8	79 - 123				
Toluene	46.32	5.0	50	0	92.6	79 - 120				
Xylenes, Total	140.4	10	150	0	93.6	80 - 120				
Surr: 1,2-Dichloroethane-d4	*51.09*	*5.0*	*50*	*0*	*102*	*70 - 128*				
Surr: 4-Bromofluorobenzene	*51.52*	*5.0*	*50*	*0*	*103*	*73 - 126*				
Surr: Dibromofluoromethane	*52.3*	*5.0*	*50*	*0*	*105*	*71 - 128*				
Surr: Toluene-d8	*49.41*	*5.0*	*50*	*0*	*98.8*	*73 - 127*				

Note: See Qualifiers Page for a list of qualifiers and their explanation.

Client: Apex Companies
WorkOrder: HS14040491
Project: E3CE-0065 Andover Release Site

QC BATCH REPORT

Batch ID: R232017 **Instrument: VOA5** **Method: SW8260**

MS Sample ID: **HS14040296-07MS** Units: **ug/Kg** Analysis Date: **17-Apr-2014 00:48**
Client ID: Run ID: **VOA5_232017** SeqNo: **2795699** PrepDate: DF: **1**

Analyte	Result	PQL	SPK Val	SPK Ref Value	%REC	Control Limit	RPD Ref Value	%RPD	RPD Limit	Qual
1,2,4-Trimethylbenzene	47	5.0	50	0	94.0	79 - 123				
1,2-Dichloroethane	46.89	5.0	50	0	93.8	73 - 121				
1,3,5-Trimethylbenzene	47.09	5.0	50	0	94.2	70 - 123				
2-Butanone	103.6	10	100	0	104	65 - 130				
Benzene	51.33	5.0	50	0	103	79 - 120				
Cyclohexane	52.26	5.0	50	0	105	74 - 126				
Ethylbenzene	48.66	5.0	50	0	97.3	80 - 122				
Isopropylbenzene	49.44	5.0	50	0	98.9	72 - 127				
Methylcyclohexane	50.84	5.0	50	0	102	77 - 126				
Naphthalene	47.87	5.0	50	0	95.7	71 - 128				
n-Butylbenzene	47.16	5.0	50	0	94.3	77 - 126				
n-Propylbenzene	47.82	5.0	50	0	95.6	79 - 123				
Toluene	48.65	5.0	50	0	97.3	79 - 120				
Xylenes, Total	146.4	10	150	0	97.6	80 - 120				
Surr: 1,2-Dichloroethane-d4	*52.25*	*5.0*	*50*	*0*	*104*	*70 - 128*				
Surr: 4-Bromofluorobenzene	*52.66*	*5.0*	*50*	*0*	*105*	*73 - 126*				
Surr: Dibromofluoromethane	*50.74*	*5.0*	*50*	*0*	*101*	*71 - 128*				
Surr: Toluene-d8	*49.73*	*5.0*	*50*	*0*	*99.5*	*73 - 127*				

Note: See Qualifiers Page for a list of qualifiers and their explanation.

Client: Apex Companies
WorkOrder: HS14040491
Project: E3CE-0065 Andover Release Site

QC BATCH REPORT

Batch ID: R232017 **Instrument: VOA5** **Method: SW8260**

MSD Sample ID: **HS14040296-07MSD** Units: **ug/Kg** Analysis Date: **17-Apr-2014 01:11**
Client ID: Run ID: **VOA5_232017** SeqNo: **2795700** PrepDate: DF: **1**

Analyte	Result	PQL	SPK Val	SPK Ref Value	%REC	Control Limit	RPD Ref Value	%RPD	RPD Limit	Qual
1,2,4-Trimethylbenzene	48.33	5.0	50	0	96.7	79 - 123	47	2.79	30	
1,2-Dichloroethane	49.63	5.0	50	0	99.3	73 - 121	46.89	5.67	30	
1,3,5-Trimethylbenzene	48.63	5.0	50	0	97.3	70 - 123	47.09	3.22	30	
2-Butanone	102.5	10	100	0	103	65 - 130	103.6	1.05	30	
Benzene	52.73	5.0	50	0	105	79 - 120	51.33	2.68	30	
Cyclohexane	54.74	5.0	50	0	109	74 - 126	52.26	4.65	30	
Ethylbenzene	49.99	5.0	50	0	100.0	80 - 122	48.66	2.7	30	
Isopropylbenzene	51.55	5.0	50	0	103	72 - 127	49.44	4.17	30	
Methylcyclohexane	53.26	5.0	50	0	107	77 - 126	50.84	4.65	30	
Naphthalene	53.42	5.0	50	0	107	71 - 128	47.87	10.9	30	
n-Butylbenzene	49.42	5.0	50	0	98.8	77 - 126	47.16	4.68	30	
n-Propylbenzene	47.47	5.0	50	0	94.9	79 - 123	47.82	0.723	30	
Toluene	51.02	5.0	50	0	102	79 - 120	48.65	4.76	30	
Xylenes, Total	153.7	10	150	0	102	79 - 123	146.4	4.87	30	
Surr: 1,2-Dichloroethane-d4	*51.22*	*5.0*	*50*	*0*	*102*	*70 - 128*	*52.25*	*1.99*	*30*	
Surr: 4-Bromofluorobenzene	*50.55*	*5.0*	*50*	*0*	*101*	*73 - 126*	*52.66*	*4.1*	*30*	
Surr: Dibromofluoromethane	*50.36*	*5.0*	*50*	*0*	*101*	*71 - 128*	*50.74*	*0.737*	*30*	
Surr: Toluene-d8	*48.99*	*5.0*	*50*	*0*	*98.0*	*73 - 127*	*49.73*	*1.5*	*30*	

The following samples were anayzed in this batch: HS14040491-08 HS14040491-16 HS14040491-30 HS14040491-42 HS14040491-54 HS14040491-60 HS14040491-64

Note: See Qualifiers Page for a list of qualifiers and their explanation.

Client: Apex Companies
WorkOrder: HS14040491
Project: E3CE-0065 Andover Release Site

QC BATCH REPORT

Batch ID: R232049 **Instrument: VOA3** **Method: SW8260**

MBLK Sample ID: **VBLKM1-041714** Units: **ug/Kg** Analysis Date: **17-Apr-2014 13:31**
Client ID: Run ID: **VOA3_232049** SeqNo: **2796469** PrepDate: DF: **50**

Analyte	Result	PQL	SPK Val	SPK Ref Value	%REC	Control Limit	RPD Ref Value	%RPD	RPD Limit	Qual
1,2,4-Trimethylbenzene	ND	250								
1,2-Dichloroethane	ND	250								
1,3,5-Trimethylbenzene	ND	250								
2-Butanone	ND	500								
Benzene	ND	250								
Cyclohexane	ND	250								
Ethylbenzene	ND	250								
Isopropylbenzene	ND	250								
Methylcyclohexane	ND	250								
Naphthalene	ND	250								
n-Butylbenzene	ND	250								
n-Propylbenzene	ND	250								
Toluene	ND	250								
Xylenes, Total	ND	500								
Surr: 1,2-Dichloroethane-d4	*2560*	*250*	*2500*	*0*	*102*	*70 - 128*				
Surr: 4-Bromofluorobenzene	*2550*	*250*	*2500*	*0*	*102*	*73 - 126*				
Surr: Dibromofluoromethane	*2571*	*250*	*2500*	*0*	*103*	*71 - 128*				
Surr: Toluene-d8	*2645*	*250*	*2500*	*0*	*106*	*73 - 127*				

Note: See Qualifiers Page for a list of qualifiers and their explanation.

Client: Apex Companies
WorkOrder: HS14040491
Project: E3CE-0065 Andover Release Site

QC BATCH REPORT

Batch ID: R232049 **Instrument: VOA3** **Method: SW8260**

LCS Sample ID: **VLCSW1-041714** Units: **ug/L** Analysis Date: **17-Apr-2014 12:37**
Client ID: Run ID: **VOA3_232049** SeqNo: **2796468** PrepDate: DF: **1**

Analyte	Result	PQL	SPK Val	SPK Ref Value	%REC	Control Limit	RPD Ref Value	%RPD	RPD Limit	Qual
1,2,4-Trimethylbenzene	53.95	5.0	50	0	108	68 - 123				
1,2-Dichloroethane	49.22	5.0	50	0	98.4	78 - 120				
1,3,5-Trimethylbenzene	52.89	5.0	50	0	106	80 - 120				
2-Butanone	105.3	10	100	0	105	58 - 132				
Benzene	50.07	5.0	50	0	100	73 - 121				
Cyclohexane	53.33	5.0	50	0	107	66 - 125				
Ethylbenzene	52.12	5.0	50	0	104	80 - 120				
Isopropylbenzene	52.05	5.0	50	0	104	75 - 130				
Methylcyclohexane	51.5	5.0	50	0	103	70 - 122				
Naphthalene	56.78	5.0	50	0	114	65 - 135				
n-Butylbenzene	53.06	5.0	50	0	106	77 - 120				
n-Propylbenzene	52.06	5.0	50	0	104	78 - 120				
Toluene	50.63	5.0	50	0	101	80 - 120				
Xylenes, Total	152.2	15	150	0	101	80 - 120				
Surr: 1,2-Dichloroethane-d4	*51.92*	*5.0*	*50*	*0*	*104*	*70 - 125*				
Surr: 4-Bromofluorobenzene	*50.88*	*5.0*	*50*	*0*	*102*	*72 - 125*				
Surr: Dibromofluoromethane	*50.64*	*5.0*	*50*	*0*	*101*	*71 - 125*				
Surr: Toluene-d8	*49.06*	*5.0*	*50*	*0*	*98.1*	*75 - 125*				

Note: See Qualifiers Page for a list of qualifiers and their explanation.

Client: Apex Companies
WorkOrder: HS14040491
Project: E3CE-0065 Andover Release Site

QC BATCH REPORT

Batch ID: R232049 **Instrument: VOA3** **Method: SW8260**

MS Sample ID: **HS14040491-04MS** Units: **ug/Kg** Analysis Date: **17-Apr-2014 16:14**
Client ID: **B-2(17)** Run ID: **VOA3_232049** SeqNo: **2797767** PrepDate: DF: **50**

Analyte	Result	PQL	SPK Val	SPK Ref Value	%REC	Control Limit	RPD Ref Value	%RPD	RPD Limit	Qual
1,2,4-Trimethylbenzene	1705	250	2500	334.6	54.8	79 - 123				S
1,2-Dichloroethane	1481	250	2500	0	59.2	73 - 121				S
1,3,5-Trimethylbenzene	1517	250	2500	69.64	57.9	70 - 123				S
2-Butanone	2915	500	5000	0	58.3	65 - 130				S
Benzene	4081	250	2500	2394	67.5	79 - 120				S
Cyclohexane	1743	250	2500	123.4	64.8	74 - 126				S
Ethylbenzene	1860	250	2500	275.9	63.3	80 - 122				S
Isopropylbenzene	1605	250	2500	0	64.2	72 - 127				S
Methylcyclohexane	1532	250	2500	202.3	53.2	77 - 126				S
Naphthalene	1423	250	2500	781	25.7	71 - 128				S
n-Butylbenzene	1237	250	2500	0	49.5	77 - 126				S
n-Propylbenzene	1493	250	2500	0	59.7	79 - 123				S
Toluene	3121	250	2500	1723	55.9	79 - 120				S
Xylenes, Total	5334	500	7500	856.3	59.7	80 - 120				S
Surr: 1,2-Dichloroethane-d4	*3146*	*250*	*2500*	*0*	*126*	*70 - 128*				
Surr: 4-Bromofluorobenzene	*2826*	*250*	*2500*	*0*	*113*	*73 - 126*				
Surr: Dibromofluoromethane	*2814*	*250*	*2500*	*0*	*113*	*71 - 128*				
Surr: Toluene-d8	*2729*	*250*	*2500*	*0*	*109*	*73 - 127*				

Note: See Qualifiers Page for a list of qualifiers and their explanation.

Client: Apex Companies
WorkOrder: HS14040491
Project: E3CE-0065 Andover Release Site

QC BATCH REPORT

Batch ID: R232049 **Instrument: VOA3** **Method: SW8260**

MSD Sample ID: **HS14040491-04MSD** Units: **ug/Kg** Analysis Date: **17-Apr-2014 16:40**
Client ID: **B-2(17)** Run ID: **VOA3_232049** SeqNo: **2797768** PrepDate: DF: **50**

Analyte	Result	PQL	SPK Val	SPK Ref Value	%REC	Control Limit	RPD Ref Value	%RPD	RPD Limit	Qual
1,2,4-Trimethylbenzene	2840	250	2500	334.6	100	79 - 123	1705	50	30	R
1,2-Dichloroethane	2315	250	2500	0	92.6	73 - 121	1481	43.9	30	R
1,3,5-Trimethylbenzene	2697	250	2500	69.64	105	70 - 123	1517	56	30	R
2-Butanone	4063	500	5000	0	81.3	65 - 130	2915	32.9	30	R
Benzene	5261	250	2500	2394	115	79 - 120	4081	25.3	30	
Cyclohexane	3138	250	2500	123.4	121	74 - 126	1743	57.1	30	R
Ethylbenzene	2855	250	2500	275.9	103	80 - 122	1860	42.2	30	R
Isopropylbenzene	2765	250	2500	0	111	72 - 127	1605	53.1	30	R
Methylcyclohexane	2595	250	2500	202.3	95.7	77 - 126	1532	51.5	30	R
Naphthalene	1917	250	2500	781	45.5	71 - 128	1423	29.6	30	S
n-Butylbenzene	2065	250	2500	0	82.6	77 - 126	1237	50.2	30	R
n-Propylbenzene	2713	250	2500	0	109	79 - 123	1493	58	30	R
Toluene	4134	250	2500	1723	96.5	79 - 120	3121	27.9	30	
Xylenes, Total	8407	500	7500	856.3	101	79 - 123	5334	44.7	30	R
Surr: 1,2-Dichloroethane-d4	*2793*	*250*	*2500*	*0*	*112*	*70 - 128*	*3146*	*11.9*	*30*	
Surr: 4-Bromofluorobenzene	*2727*	*250*	*2500*	*0*	*109*	*73 - 126*	*2826*	*3.57*	*30*	
Surr: Dibromofluoromethane	*2931*	*250*	*2500*	*0*	*117*	*71 - 128*	*2814*	*4.09*	*30*	
Surr: Toluene-d8	*2567*	*250*	*2500*	*0*	*103*	*73 - 127*	*2729*	*6.13*	*30*	

The following samples were anayzed in this batch:

HS14040491-04	HS14040491-05	HS14040491-08	HS14040491-10
HS14040491-15	HS14040491-19	HS14040491-20	HS14040491-28
HS14040491-31	HS14040491-32	HS14040491-34	HS14040491-38
HS14040491-39	HS14040491-40	HS14040491-48	HS14040491-58

Note: See Qualifiers Page for a list of qualifiers and their explanation.

Client: Apex Companies
WorkOrder: HS14040491
Project: E3CE-0065 Andover Release Site

QC BATCH REPORT

Batch ID: R232090 **Instrument: VOA5** **Method: SW8260**

MBLK Sample ID: **VBLKS2-041714** Units: **ug/Kg** Analysis Date: **17-Apr-2014 20:42**
Client ID: Run ID: **VOA5_232090** SeqNo: **2797423** PrepDate: DF: **1**

Analyte	Result	PQL	SPK Val	SPK Ref Value	%REC	Control Limit	RPD Ref Value	%RPD	RPD Limit	Qual
1,2,4-Trimethylbenzene	ND	5.0								
1,2-Dichloroethane	ND	5.0								
1,3,5-Trimethylbenzene	ND	5.0								
2-Butanone	ND	10								
Benzene	ND	5.0								
Cyclohexane	ND	5.0								
Ethylbenzene	ND	5.0								
Isopropylbenzene	ND	5.0								
Methylcyclohexane	ND	5.0								
Naphthalene	ND	5.0								
n-Butylbenzene	ND	5.0								
n-Propylbenzene	ND	5.0								
Toluene	ND	5.0								
Xylenes, Total	ND	10								
Surr: 1,2-Dichloroethane-d4	*46.49*	*5.0*	*50*	*0*	*93.0*	*70 - 128*				
Surr: 4-Bromofluorobenzene	*46.18*	*5.0*	*50*	*0*	*92.4*	*73 - 126*				
Surr: Dibromofluoromethane	*46.99*	*5.0*	*50*	*0*	*94.0*	*71 - 128*				
Surr: Toluene-d8	*50.75*	*5.0*	*50*	*0*	*101*	*73 - 127*				

Note: See Qualifiers Page for a list of qualifiers and their explanation.

Client: Apex Companies
WorkOrder: HS14040491
Project: E3CE-0065 Andover Release Site

QC BATCH REPORT

Batch ID: R232090 **Instrument: VOA5** **Method: SW8260**

LCS Sample ID: **VLCSS2-041714** Units: **ug/Kg** Analysis Date: **17-Apr-2014 19:55**
Client ID: Run ID: **VOA5_232090** SeqNo: **2797422** PrepDate: DF: **1**

Analyte	Result	PQL	SPK Val	SPK Ref Value	%REC	Control Limit	RPD Ref Value	%RPD	RPD Limit	Qual
1,2,4-Trimethylbenzene	45.49	5.0	50	0	91.0	79 - 123				
1,2-Dichloroethane	41.34	5.0	50	0	82.7	73 - 121				
1,3,5-Trimethylbenzene	44.69	5.0	50	0	89.4	70 - 123				
2-Butanone	87.85	10	100	0	87.8	65 - 130				
Benzene	45.05	5.0	50	0	90.1	79 - 120				
Cyclohexane	45.32	5.0	50	0	90.6	74 - 126				
Ethylbenzene	44.48	5.0	50	0	89.0	80 - 122				
Isopropylbenzene	45.37	5.0	50	0	90.7	72 - 127				
Methylcyclohexane	44.38	5.0	50	0	88.8	77 - 126				
Naphthalene	48.82	5.0	50	0	97.6	71 - 128				
n-Butylbenzene	44.85	5.0	50	0	89.7	77 - 126				
n-Propylbenzene	45.11	5.0	50	0	90.2	79 - 123				
Toluene	44.55	5.0	50	0	89.1	79 - 120				
Xylenes, Total	135.3	10	150	0	90.2	80 - 120				
Surr: 1,2-Dichloroethane-d4	*50.54*	*5.0*	*50*	*0*	*101*	*70 - 128*				
Surr: 4-Bromofluorobenzene	*49.95*	*5.0*	*50*	*0*	*99.9*	*73 - 126*				
Surr: Dibromofluoromethane	*49.44*	*5.0*	*50*	*0*	*98.9*	*71 - 128*				
Surr: Toluene-d8	*49.53*	*5.0*	*50*	*0*	*99.1*	*73 - 127*				

Note: See Qualifiers Page for a list of qualifiers and their explanation.

Client: Apex Companies
WorkOrder: HS14040491
Project: E3CE-0065 Andover Release Site

QC BATCH REPORT

Batch ID: R232090 **Instrument: VOA5** **Method: SW8260**

MS Sample ID: **HS14040491-61MS** Units: **ug/Kg** Analysis Date: **17-Apr-2014 23:48**
Client ID: **B-13(10)** Run ID: **VOA5_232090** SeqNo: **2797431** PrepDate: DF: **1**

Analyte	Result	PQL	SPK Val	SPK Ref Value	%REC	Control Limit	RPD Ref Value	%RPD	RPD Limit	Qual
1,2,4-Trimethylbenzene	23.05	5.0	50	0	46.1	79 - 123				S
1,2-Dichloroethane	24.42	5.0	50	0	48.8	73 - 121				S
1,3,5-Trimethylbenzene	23.43	5.0	50	0	46.9	70 - 123				S
2-Butanone	57.99	10	100	0	58.0	65 - 130				S
Benzene	23.46	5.0	50	0	46.9	79 - 120				S
Cyclohexane	23.32	5.0	50	0	46.6	74 - 126				S
Ethylbenzene	22.85	5.0	50	0	45.7	80 - 122				S
Isopropylbenzene	22.65	5.0	50	0	45.3	72 - 127				S
Methylcyclohexane	21.58	5.0	50	0	43.2	77 - 126				S
Naphthalene	31.73	5.0	50	0	63.5	71 - 128				S
n-Butylbenzene	21.89	5.0	50	0	43.8	77 - 126				S
n-Propylbenzene	23.22	5.0	50	0	46.4	79 - 123				S
Toluene	23.2	5.0	50	0	46.4	79 - 120				S
Xylenes, Total	68.98	10	150	0	46.0	80 - 120				S
Surr: 1,2-Dichloroethane-d4	*51.37*	*5.0*	*50*	*0*	*103*	*70 - 128*				
Surr: 4-Bromofluorobenzene	*51.58*	*5.0*	*50*	*0*	*103*	*73 - 126*				
Surr: Dibromofluoromethane	*48.19*	*5.0*	*50*	*0*	*96.4*	*71 - 128*				
Surr: Toluene-d8	*49.12*	*5.0*	*50*	*0*	*98.2*	*73 - 127*				

Note: See Qualifiers Page for a list of qualifiers and their explanation.

Client: Apex Companies
WorkOrder: HS14040491
Project: E3CE-0065 Andover Release Site

QC BATCH REPORT

Batch ID: R232090 **Instrument: VOA5** **Method: SW8260**

MSD Sample ID: **HS14040491-61MSD** Units: **ug/Kg** Analysis Date: **18-Apr-2014 00:12**
Client ID: **B-13(10)** Run ID: **VOA5_232090** SeqNo: **2797432** PrepDate: DF: **1**

Analyte	Result	PQL	SPK Val	SPK Ref Value	%REC	Control Limit	RPD Ref Value	%RPD	RPD Limit	Qual
1,2,4-Trimethylbenzene	37.72	5.0	50	0	75.4	79 - 123	23.05	48.3	30	SR
1,2-Dichloroethane	36.96	5.0	50	0	73.9	73 - 121	24.42	40.9	30	R
1,3,5-Trimethylbenzene	39.26	5.0	50	0	78.5	70 - 123	23.43	50.5	30	R
2-Butanone	78.41	10	100	0	78.4	65 - 130	57.99	29.9	30	
Benzene	38.7	5.0	50	0	77.4	79 - 120	23.46	49	30	SR
Cyclohexane	36.78	5.0	50	0	73.6	74 - 126	23.32	44.8	30	SR
Ethylbenzene	37.6	5.0	50	0	75.2	80 - 122	22.85	48.8	30	SR
Isopropylbenzene	38.2	5.0	50	0	76.4	72 - 127	22.65	51.1	30	R
Methylcyclohexane	36.44	5.0	50	0	72.9	77 - 126	21.58	51.2	30	SR
Naphthalene	42.45	5.0	50	0	84.9	71 - 128	31.73	28.9	30	
n-Butylbenzene	36.54	5.0	50	0	73.1	77 - 126	21.89	50.2	30	SR
n-Propylbenzene	37.36	5.0	50	0	74.7	79 - 123	23.22	46.7	30	SR
Toluene	38.84	5.0	50	0	77.7	79 - 120	23.2	50.4	30	SR
Xylenes, Total	115.8	10	150	0	77.2	79 - 123	68.98	50.7	30	SR
Surr: 1,2-Dichloroethane-d4	*49.47*	*5.0*	*50*	*0*	*98.9*	*70 - 128*	*51.37*	*3.77*	*30*	
Surr: 4-Bromofluorobenzene	*50.49*	*5.0*	*50*	*0*	*101*	*73 - 126*	*51.58*	*2.14*	*30*	
Surr: Dibromofluoromethane	*48.02*	*5.0*	*50*	*0*	*96.0*	*71 - 128*	*48.19*	*0.34*	*30*	
Surr: Toluene-d8	*50.15*	*5.0*	*50*	*0*	*100*	*73 - 127*	*49.12*	*2.07*	*30*	

The following samples were anayzed in this batch: HS14040491-50 HS14040491-52 HS14040491-59 HS14040491-61

Note: See Qualifiers Page for a list of qualifiers and their explanation.

Client: Apex Companies
WorkOrder: HS14040491
Project: E3CE-0065 Andover Release Site

QC BATCH REPORT

Batch ID: R232098 **Instrument: VOA4** **Method: SW8260**

MBLK Sample ID: **VBLKW-140417** Units: **ug/L** Analysis Date: **17-Apr-2014 22:54**
Client ID: Run ID: **VOA4_232098** SeqNo: **2797741** PrepDate: DF: **1**

Analyte	Result	PQL	SPK Val	SPK Ref Value	%REC	Control Limit	RPD Ref Value	%RPD	RPD Limit	Qual
1,2,4-Trimethylbenzene	ND	1.0								
1,2-Dichloroethane	ND	1.0								
1,3,5-Trimethylbenzene	ND	1.0								
2-Butanone	ND	2.0								
Benzene	ND	1.0								
Cyclohexane	ND	1.0								
Ethylbenzene	ND	1.0								
Isopropylbenzene	ND	1.0								
Methylcyclohexane	ND	1.0								
Naphthalene	ND	1.0								
n-Butylbenzene	ND	1.0								
n-Propylbenzene	ND	1.0								
Toluene	ND	1.0								
Xylenes, Total	ND	3.0								
Surr: 1,2-Dichloroethane-d4	*44.81*	*1.0*	*50*	*0*	*89.6*	*71 - 125*				
Surr: 4-Bromofluorobenzene	*49.52*	*1.0*	*50*	*0*	*99.0*	*70 - 125*				
Surr: Dibromofluoromethane	*44.92*	*1.0*	*50*	*0*	*89.8*	*74 - 125*				
Surr: Toluene-d8	*47.99*	*1.0*	*50*	*0*	*96.0*	*75 - 125*				

Note: See Qualifiers Page for a list of qualifiers and their explanation.

Client: Apex Companies
WorkOrder: HS14040491
Project: E3CE-0065 Andover Release Site

QC BATCH REPORT

Batch ID: R232098 **Instrument: VOA4** **Method: SW8260**

LCS Sample ID: **VLCSW-140417** Units: **ug/L** Analysis Date: **17-Apr-2014 22:05**
Client ID: Run ID: **VOA4_232098** SeqNo: **2797740** PrepDate: DF: **1**

Analyte	Result	PQL	SPK Val	SPK Ref Value	%REC	Control Limit	RPD Ref Value	%RPD	RPD Limit	Qual
1,2,4-Trimethylbenzene	52.07	1.0	50	0	104	80 - 120				
1,2-Dichloroethane	49.34	1.0	50	0	98.7	79 - 120				
1,3,5-Trimethylbenzene	52.79	1.0	50	0	106	80 - 120				
2-Butanone	108	2.0	100	0	108	60 - 140				
Benzene	49.19	1.0	50	0	98.4	80 - 120				
Cyclohexane	50.61	1.0	50	0	101	75 - 125				
Ethylbenzene	49.5	1.0	50	0	99.0	80 - 120				
Isopropylbenzene	52.81	1.0	50	0	106	80 - 120				
Methylcyclohexane	49.24	1.0	50	0	98.5	70 - 122				
Naphthalene	49.72	1.0	50	0	99.4	70 - 130				
n-Butylbenzene	54.78	1.0	50	0	110	75 - 125				
n-Propylbenzene	53.99	1.0	50	0	108	75 - 130				
Toluene	49.93	1.0	50	0	99.9	80 - 121				
Xylenes, Total	148.6	3.0	150	0	99.1	80 - 124				
Surr: 1,2-Dichloroethane-d4	*44.29*	*1.0*	*50*	*0*	*88.6*	*71 - 125*				
Surr: 4-Bromofluorobenzene	*49.99*	*1.0*	*50*	*0*	*100.0*	*70 - 125*				
Surr: Dibromofluoromethane	*45.84*	*1.0*	*50*	*0*	*91.7*	*74 - 125*				
Surr: Toluene-d8	*48.06*	*1.0*	*50*	*0*	*96.1*	*75 - 125*				

Note: See Qualifiers Page for a list of qualifiers and their explanation.

Client: Apex Companies
WorkOrder: HS14040491
Project: E3CE-0065 Andover Release Site

QC BATCH REPORT

Batch ID: R232098 **Instrument: VOA4** **Method: SW8260**

MS Sample ID: **HS14040702-01MS** Units: **ug/L** Analysis Date: **17-Apr-2014 23:43**
Client ID: Run ID: **VOA4_232098** SeqNo: **2797743** PrepDate: DF: **1**

Analyte	Result	PQL	SPK Val	SPK Ref Value	%REC	Control Limit	RPD Ref Value	%RPD	RPD Limit	Qual
1,2,4-Trimethylbenzene	53.7	1.0	50	0	107	80 - 120				
1,2-Dichloroethane	50.38	1.0	50	0	101	79 - 120				
1,3,5-Trimethylbenzene	56.01	1.0	50	0	112	80 - 120				
2-Butanone	103.2	2.0	100	0	103	60 - 140				
Benzene	52.65	1.0	50	0	105	80 - 120				
Cyclohexane	57.29	1.0	50	0	115	75 - 125				
Ethylbenzene	53.76	1.0	50	0	108	80 - 120				
Isopropylbenzene	56.72	1.0	50	0	113	80 - 120				
Methylcyclohexane	56.19	1.0	50	0	112	70 - 122				
Naphthalene	48.6	1.0	50	0	97.2	70 - 130				
n-Butylbenzene	58.7	1.0	50	0	117	75 - 125				
n-Propylbenzene	57.13	1.0	50	0	114	75 - 130				
Toluene	53.55	1.0	50	0	107	80 - 121				
Xylenes, Total	159	3.0	150	0	106	80 - 124				
Surr: 1,2-Dichloroethane-d4	*44.42*	*1.0*	*50*	*0*	*88.8*	*71 - 125*				
Surr: 4-Bromofluorobenzene	*51.36*	*1.0*	*50*	*0*	*103*	*70 - 125*				
Surr: Dibromofluoromethane	*46.71*	*1.0*	*50*	*0*	*93.4*	*74 - 125*				
Surr: Toluene-d8	*49.36*	*1.0*	*50*	*0*	*98.7*	*75 - 125*				

Note: See Qualifiers Page for a list of qualifiers and their explanation.

Client: Apex Companies
WorkOrder: HS14040491
Project: E3CE-0065 Andover Release Site

QC BATCH REPORT

Batch ID: R232098 **Instrument: VOA4** **Method: SW8260**

MSD Sample ID: **HS14040702-01MSD** Units: **ug/L** Analysis Date: **18-Apr-2014 00:08**
Client ID: Run ID: **VOA4_232098** SeqNo: **2797744** PrepDate: DF: **1**

Analyte	Result	PQL	SPK Val	SPK Ref Value	%REC	Control Limit	RPD Ref Value	%RPD	RPD Limit	Qual
1,2,4-Trimethylbenzene	54.36	1.0	50	0	109	80 - 120	53.7	1.23	20	
1,2-Dichloroethane	49.7	1.0	50	0	99.4	79 - 120	50.38	1.37	20	
1,3,5-Trimethylbenzene	55.28	1.0	50	0	111	80 - 120	56.01	1.3	20	
2-Butanone	103.7	2.0	100	0	104	60 - 140	103.2	0.425	20	
Benzene	51.34	1.0	50	0	103	80 - 120	52.65	2.53	20	
Cyclohexane	57.13	1.0	50	0	114	75 - 125	57.29	0.283	20	
Ethylbenzene	52.43	1.0	50	0	105	80 - 120	53.76	2.5	20	
Isopropylbenzene	56.01	1.0	50	0	112	80 - 120	56.72	1.26	20	
Methylcyclohexane	56.17	1.0	50	0	112	70 - 122	56.19	0.0415	20	
Naphthalene	49.67	1.0	50	0	99.3	70 - 130	48.6	2.18	20	
n-Butylbenzene	59.8	1.0	50	0	120	75 - 125	58.7	1.86	20	
n-Propylbenzene	57.12	1.0	50	0	114	75 - 130	57.13	0.0209	20	
Toluene	51.69	1.0	50	0	103	80 - 121	53.55	3.52	20	
Xylenes, Total	153.7	3.0	150	0	102	80 - 124	159	3.43	20	
Surr: 1,2-Dichloroethane-d4	*44.75*	*1.0*	*50*	*0*	*89.5*	*71 - 125*	*44.42*	*0.74*	*20*	
Surr: 4-Bromofluorobenzene	*50.49*	*1.0*	*50*	*0*	*101*	*70 - 125*	*51.36*	*1.72*	*20*	
Surr: Dibromofluoromethane	*47.14*	*1.0*	*50*	*0*	*94.3*	*74 - 125*	*46.71*	*0.923*	*20*	
Surr: Toluene-d8	*47.74*	*1.0*	*50*	*0*	*95.5*	*75 - 125*	*49.36*	*3.32*	*20*	

The following samples were anayzed in this batch: HS14040491-71

Note: See Qualifiers Page for a list of qualifiers and their explanation.

Client: Apex Companies
WorkOrder: HS14040491
Project: E3CE-0065 Andover Release Site

QC BATCH REPORT

Batch ID: R232109 **Instrument: VOA3** **Method: SW8260**

MBLK Sample ID: **VBLKM1-041814** Units: **ug/Kg** Analysis Date: **18-Apr-2014 09:09**
Client ID: Run ID: **VOA3_232109** SeqNo: **2798064** PrepDate: DF: **50**

Analyte	Result	PQL	SPK Val	SPK Ref Value	%REC	Control Limit	RPD Ref Value	%RPD	RPD Limit	Qual
1,2,4-Trimethylbenzene	ND	250								
Benzene	ND	250								
Ethylbenzene	ND	250								
Toluene	ND	250								
Xylenes, Total	ND	500								
Surr: 1,2-Dichloroethane-d4	*2749*	*250*	*2500*	*0*	*110*	*70 - 128*				
Surr: 4-Bromofluorobenzene	*2756*	*250*	*2500*	*0*	*110*	*73 - 126*				
Surr: Dibromofluoromethane	*2694*	*250*	*2500*	*0*	*108*	*71 - 128*				
Surr: Toluene-d8	*2627*	*250*	*2500*	*0*	*105*	*73 - 127*				

LCS Sample ID: **VLCSW1-041814** Units: **ug/L** Analysis Date: **18-Apr-2014 08:12**
Client ID: Run ID: **VOA3_232109** SeqNo: **2798061** PrepDate: DF: **1**

Analyte	Result	PQL	SPK Val	SPK Ref Value	%REC	Control Limit	RPD Ref Value	%RPD	RPD Limit	Qual
1,2,4-Trimethylbenzene	50.86	5.0	50	0	102	68 - 123				
Benzene	50.47	5.0	50	0	101	73 - 121				
Ethylbenzene	51.27	5.0	50	0	103	80 - 120				
Toluene	46.52	5.0	50	0	93.0	80 - 120				
Xylenes, Total	152.3	15	150	0	102	80 - 120				
Surr: 1,2-Dichloroethane-d4	*53.42*	*5.0*	*50*	*0*	*107*	*70 - 125*				
Surr: 4-Bromofluorobenzene	*53.12*	*5.0*	*50*	*0*	*106*	*72 - 125*				
Surr: Dibromofluoromethane	*53.53*	*5.0*	*50*	*0*	*107*	*71 - 125*				
Surr: Toluene-d8	*47.16*	*5.0*	*50*	*0*	*94.3*	*75 - 125*				

Note: See Qualifiers Page for a list of qualifiers and their explanation.

Client: Apex Companies
WorkOrder: HS14040491
Project: E3CE-0065 Andover Release Site

QC BATCH REPORT

Batch ID: R232109 **Instrument: VOA3** **Method: SW8260**

MS Sample ID: **HS14040491-54MS** Units: **ug/Kg** Analysis Date: **18-Apr-2014 13:39**
Client ID: **B-11(20)** Run ID: **VOA3_232109** SeqNo: **2798724** PrepDate: DF: **50**

Analyte	Result	PQL	SPK Val	SPK Ref Value	%REC	Control Limit	RPD Ref Value	%RPD	RPD Limit	Qual
1,2,4-Trimethylbenzene	6181	250	2500	119	242	79 - 123				S
Benzene	3106	250	2500	641	98.6	79 - 120				
Ethylbenzene	2790	250	2500	314.1	99.1	80 - 122				
Toluene	2982	250	2500	440.7	102	79 - 120				
Xylenes, Total	8640	500	7500	751.9	105	80 - 120				
Surr: 1,2-Dichloroethane-d4	*2983*	*250*	*2500*	*0*	*119*	*70 - 128*				
Surr: 4-Bromofluorobenzene	*2500*	*250*	*2500*	*0*	*100.0*	*73 - 126*				
Surr: Dibromofluoromethane	*2632*	*250*	*2500*	*0*	*105*	*71 - 128*				
Surr: Toluene-d8	*2503*	*250*	*2500*	*0*	*100*	*73 - 127*				

MSD Sample ID: **HS14040491-54MSD** Units: **ug/Kg** Analysis Date: **18-Apr-2014 14:05**
Client ID: **B-11(20)** Run ID: **VOA3_232109** SeqNo: **2798725** PrepDate: DF: **50**

Analyte	Result	PQL	SPK Val	SPK Ref Value	%REC	Control Limit	RPD Ref Value	%RPD	RPD Limit	Qual
1,2,4-Trimethylbenzene	4535	250	2500	119	177	79 - 123	6181	30.7	30	SR
Benzene	3392	250	2500	641	110	79 - 120	3106	8.81	30	
Ethylbenzene	2931	250	2500	314.1	105	80 - 122	2790	4.9	30	
Toluene	3252	250	2500	440.7	112	79 - 120	2982	8.66	30	
Xylenes, Total	8904	500	7500	751.9	109	79 - 123	8640	3	30	
Surr: 1,2-Dichloroethane-d4	*3020*	*250*	*2500*	*0*	*121*	*70 - 128*	*2983*	*1.22*	*30*	
Surr: 4-Bromofluorobenzene	*2656*	*250*	*2500*	*0*	*106*	*73 - 126*	*2500*	*6.07*	*30*	
Surr: Dibromofluoromethane	*2730*	*250*	*2500*	*0*	*109*	*71 - 128*	*2632*	*3.63*	*30*	
Surr: Toluene-d8	*2623*	*250*	*2500*	*0*	*105*	*73 - 127*	*2503*	*4.68*	*30*	

The following samples were anayzed in this batch: HS14040491-30 HS14040491-46 HS14040491-47 HS14040491-54 HS14040491-62

Note: See Qualifiers Page for a list of qualifiers and their explanation.

Client: Apex Companies
WorkOrder: HS14040491
Project: E3CE-0065 Andover Release Site

QC BATCH REPORT

Batch ID: R232170 **Instrument: VOA4** **Method: SW8260**

MBLK Sample ID: **VBLKW-140418** Units: **ug/L** Analysis Date: **18-Apr-2014 22:31**
Client ID: Run ID: **VOA4_232170** SeqNo: **2799594** PrepDate: DF: **1**

Analyte	Result	PQL	SPK Val	SPK Ref Value	%REC	Control Limit	RPD Ref Value	%RPD	RPD Limit	Qual
1,2,4-Trimethylbenzene	ND	1.0								
1,2-Dichloroethane	ND	1.0								
1,3,5-Trimethylbenzene	ND	1.0								
2-Butanone	ND	2.0								
Benzene	ND	1.0								
Cyclohexane	ND	1.0								
Ethylbenzene	ND	1.0								
Isopropylbenzene	ND	1.0								
m,p-Xylene	ND	2.0								
Methyl tert-butyl ether	ND	1.0								
Methylcyclohexane	ND	1.0								
Naphthalene	ND	1.0								
n-Butylbenzene	ND	1.0								
n-Propylbenzene	ND	1.0								
o-Xylene	ND	1.0								
Toluene	ND	1.0								
Xylenes, Total	ND	3.0								
1,2-Dichloroethene, Total	ND	1.0								
Surr: 1,2-Dichloroethane-d4	*46.02*	*1.0*	*50*	*0*	*92.0*	*71 - 125*				
Surr: 4-Bromofluorobenzene	*49.39*	*1.0*	*50*	*0*	*98.8*	*70 - 125*				
Surr: Dibromofluoromethane	*47.58*	*1.0*	*50*	*0*	*95.2*	*74 - 125*				
Surr: Toluene-d8	*48.5*	*1.0*	*50*	*0*	*97.0*	*75 - 125*				

Note: See Qualifiers Page for a list of qualifiers and their explanation.

Client: Apex Companies
WorkOrder: HS14040491
Project: E3CE-0065 Andover Release Site

QC BATCH REPORT

Batch ID: R232170 **Instrument: VOA4** **Method: SW8260**

LCS Sample ID: **VLCSW-140418** Units: **ug/L** Analysis Date: **18-Apr-2014 21:42**
Client ID: Run ID: **VOA4_232170** SeqNo: **2799593** PrepDate: DF: **1**

Analyte	Result	PQL	SPK Val	SPK Ref Value	%REC	Control Limit	RPD Ref Value	%RPD	RPD Limit	Qual
1,2,4-Trimethylbenzene	51	1.0	50	0	102	80 - 120				
1,2-Dichloroethane	47.84	1.0	50	0	95.7	79 - 120				
1,3,5-Trimethylbenzene	51.79	1.0	50	0	104	80 - 120				
2-Butanone	115.4	2.0	100	0	115	60 - 140				
Benzene	49.28	1.0	50	0	98.6	80 - 120				
Cyclohexane	52.09	1.0	50	0	104	75 - 125				
Ethylbenzene	49.55	1.0	50	0	99.1	80 - 120				
Isopropylbenzene	51.85	1.0	50	0	104	80 - 120				
m,p-Xylene	100.9	2.0	100	0	101	80 - 120				
Methyl tert-butyl ether	54.72	1.0	50	0	109	70 - 125				
Methylcyclohexane	49.88	1.0	50	0	99.8	70 - 122				
Naphthalene	47.26	1.0	50	0	94.5	70 - 130				
n-Butylbenzene	55.02	1.0	50	0	110	75 - 125				
n-Propylbenzene	53.21	1.0	50	0	106	75 - 130				
o-Xylene	50.02	1.0	50	0	100	80 - 120				
Toluene	50.64	1.0	50	0	101	80 - 121				
Xylenes, Total	150.9	3.0	150	0	101	80 - 124				
1,2-Dichloroethene, Total	102.9	1.0	100	0	103	75 - 125				
Surr: 1,2-Dichloroethane-d4	*45.34*	*1.0*	*50*	*0*	*90.7*	*71 - 125*				
Surr: 4-Bromofluorobenzene	*50.48*	*1.0*	*50*	*0*	*101*	*70 - 125*				
Surr: Dibromofluoromethane	*48.34*	*1.0*	*50*	*0*	*96.7*	*74 - 125*				
Surr: Toluene-d8	*50.01*	*1.0*	*50*	*0*	*100*	*75 - 125*				

Note: See Qualifiers Page for a list of qualifiers and their explanation.

Client: Apex Companies
WorkOrder: HS14040491
Project: E3CE-0065 Andover Release Site

QC BATCH REPORT

Batch ID: R232170 **Instrument: VOA4** **Method: SW8260**

MS Sample ID: **HS14040710-01MS** Units: **ug/L** Analysis Date: **18-Apr-2014 23:20**
Client ID: Run ID: **VOA4_232170** SeqNo: **2799596** PrepDate: DF: **1**

Analyte	Result	PQL	SPK Val	SPK Ref Value	%REC	Control Limit	RPD Ref Value	%RPD	RPD Limit	Qual
1,2,4-Trimethylbenzene	50.37	1.0	50	0	101	80 - 120				
1,2-Dichloroethane	47.41	1.0	50	0	94.8	79 - 120				
1,3,5-Trimethylbenzene	51.91	1.0	50	0	104	80 - 120				
2-Butanone	102.4	2.0	100	0	102	60 - 140				
Benzene	49.97	1.0	50	0	99.9	80 - 120				
Cyclohexane	55.66	1.0	50	0	111	75 - 125				
Ethylbenzene	50.48	1.0	50	0	101	80 - 120				
Isopropylbenzene	52.54	1.0	50	0	105	80 - 120				
m,p-Xylene	99.14	2.0	100	0	99.1	80 - 120				
Methyl tert-butyl ether	52.07	1.0	50	0	104	70 - 125				
Methylcyclohexane	53.7	1.0	50	0	107	70 - 122				
Naphthalene	46.02	1.0	50	0	92.0	70 - 130				
n-Butylbenzene	56.29	1.0	50	0	113	75 - 125				
n-Propylbenzene	54.19	1.0	50	0	108	75 - 130				
o-Xylene	48.03	1.0	50	0	96.1	80 - 120				
Toluene	48.92	1.0	50	0	97.8	80 - 121				
Xylenes, Total	147.2	3.0	150	0	98.1	80 - 124				
1,2-Dichloroethene, Total	102.8	1.0	100	0	103	75 - 125				
Surr: 1,2-Dichloroethane-d4	*46.01*	*1.0*	*50*	*0*	*92.0*	*71 - 125*				
Surr: 4-Bromofluorobenzene	*50.33*	*1.0*	*50*	*0*	*101*	*70 - 125*				
Surr: Dibromofluoromethane	*48.09*	*1.0*	*50*	*0*	*96.2*	*74 - 125*				
Surr: Toluene-d8	*49.51*	*1.0*	*50*	*0*	*99.0*	*75 - 125*				

Note: See Qualifiers Page for a list of qualifiers and their explanation.

Client: Apex Companies
WorkOrder: HS14040491
Project: E3CE-0065 Andover Release Site

QC BATCH REPORT

Batch ID: R232170 **Instrument: VOA4** **Method: SW8260**

MSD Sample ID: **HS14040710-01MSD** Units: **ug/L** Analysis Date: **18-Apr-2014 23:45**
Client ID: Run ID: **VOA4_232170** SeqNo: **2799597** PrepDate: DF: **1**

Analyte	Result	PQL	SPK Val	SPK Ref Value	%REC	Control Limit	RPD Ref Value	%RPD	RPD Limit	Qual
1,2,4-Trimethylbenzene	53.86	1.0	50	0	108	80 - 120	50.37	6.7	20	
1,2-Dichloroethane	49.9	1.0	50	0	99.8	79 - 120	47.41	5.12	20	
1,3,5-Trimethylbenzene	55.7	1.0	50	0	111	80 - 120	51.91	7.05	20	
2-Butanone	111	2.0	100	0	111	60 - 140	102.4	8.09	20	
Benzene	51.47	1.0	50	0	103	80 - 120	49.97	2.96	20	
Cyclohexane	57.93	1.0	50	0	116	75 - 125	55.66	4	20	
Ethylbenzene	54.41	1.0	50	0	109	80 - 120	50.48	7.5	20	
Isopropylbenzene	57.37	1.0	50	0	115	80 - 120	52.54	8.79	20	
m,p-Xylene	106.4	2.0	100	0	106	80 - 120	99.14	7.04	20	
Methyl tert-butyl ether	55.91	1.0	50	0	112	70 - 125	52.07	7.11	20	
Methylcyclohexane	55.94	1.0	50	0	112	70 - 122	53.7	4.09	20	
Naphthalene	50.41	1.0	50	0	101	70 - 130	46.02	9.12	20	
n-Butylbenzene	59.4	1.0	50	0	119	75 - 125	56.29	5.37	20	
n-Propylbenzene	58	1.0	50	0	116	75 - 130	54.19	6.79	20	
o-Xylene	52.36	1.0	50	0	105	80 - 120	48.03	8.64	20	
Toluene	53.49	1.0	50	0	107	80 - 121	48.92	8.93	20	
Xylenes, Total	158.7	3.0	150	0	106	80 - 124	147.2	7.57	20	
1,2-Dichloroethene, Total	110.5	1.0	100	0	111	75 - 125	102.8	7.21	20	
Surr: 1,2-Dichloroethane-d4	*46.47*	*1.0*	*50*	*0*	*92.9*	*71 - 125*	*46.01*	*0.997*	*20*	
Surr: 4-Bromofluorobenzene	*51.25*	*1.0*	*50*	*0*	*102*	*70 - 125*	*50.33*	*1.8*	*20*	
Surr: Dibromofluoromethane	*48.2*	*1.0*	*50*	*0*	*96.4*	*74 - 125*	*48.09*	*0.215*	*20*	
Surr: Toluene-d8	*49.96*	*1.0*	*50*	*0*	*99.9*	*75 - 125*	*49.51*	*0.908*	*20*	

The following samples were anayzed in this batch: HS14040491-65 HS14040491-66 HS14040491-67 HS14040491-68 HS14040491-69 HS14040491-70

Note: See Qualifiers Page for a list of qualifiers and their explanation.

Client: Apex Companies
WorkOrder: HS14040491
Project: E3CE-0065 Andover Release Site

QC BATCH REPORT

Batch ID: R232188 **Instrument: VOA5** **Method: SW8260**

MBLK Sample ID: **VBLKS2-041914** Units: **ug/Kg** Analysis Date: **19-Apr-2014 22:27**
Client ID: Run ID: **VOA5_232188** SeqNo: **2801121** PrepDate: DF: **1**

Analyte	Result	PQL	SPK Val	SPK Ref Value	%REC	Control Limit	RPD Ref Value	%RPD	RPD Limit	Qual
1,2,4-Trimethylbenzene	ND	5.0								
1,2-Dichloroethane	ND	5.0								
1,3,5-Trimethylbenzene	ND	5.0								
2-Butanone	ND	10								
Benzene	ND	5.0								
Cyclohexane	ND	5.0								
Ethylbenzene	ND	5.0								
Isopropylbenzene	ND	5.0								
Methylcyclohexane	ND	5.0								
Naphthalene	ND	5.0								
n-Butylbenzene	ND	5.0								
n-Propylbenzene	ND	5.0								
Toluene	ND	5.0								
Xylenes, Total	ND	10								
Surr: 1,2-Dichloroethane-d4	*44.62*	*5.0*	*50*	*0*	*89.2*	*70 - 128*				
Surr: 4-Bromofluorobenzene	*48.1*	*5.0*	*50*	*0*	*96.2*	*73 - 126*				
Surr: Dibromofluoromethane	*47.42*	*5.0*	*50*	*0*	*94.8*	*71 - 128*				
Surr: Toluene-d8	*51.96*	*5.0*	*50*	*0*	*104*	*73 - 127*				

Note: See Qualifiers Page for a list of qualifiers and their explanation.

Client: Apex Companies
WorkOrder: HS14040491
Project: E3CE-0065 Andover Release Site

QC BATCH REPORT

Batch ID: R232188 **Instrument: VOA5** **Method: SW8260**

LCS Sample ID: **VLCSS2-041914** Units: **ug/Kg** Analysis Date: **19-Apr-2014 21:40**
Client ID: Run ID: **VOA5_232188** SeqNo: **2801120** PrepDate: DF: **1**

Analyte	Result	PQL	SPK Val	SPK Ref Value	%REC	Control Limit	RPD Ref Value	%RPD	RPD Limit	Qual
1,2,4-Trimethylbenzene	45.67	5.0	50	0	91.3	79 - 123				
1,2-Dichloroethane	47.41	5.0	50	0	94.8	73 - 121				
1,3,5-Trimethylbenzene	46.28	5.0	50	0	92.6	70 - 123				
2-Butanone	86.47	10	100	0	86.5	65 - 130				
Benzene	45.62	5.0	50	0	91.2	79 - 120				
Cyclohexane	44.17	5.0	50	0	88.3	74 - 126				
Ethylbenzene	46.62	5.0	50	0	93.2	80 - 122				
Isopropylbenzene	45.84	5.0	50	0	91.7	72 - 127				
Methylcyclohexane	45.85	5.0	50	0	91.7	77 - 126				
Naphthalene	47.21	5.0	50	0	94.4	71 - 128				
n-Butylbenzene	44.54	5.0	50	0	89.1	77 - 126				
n-Propylbenzene	46.34	5.0	50	0	92.7	79 - 123				
Toluene	45.72	5.0	50	0	91.4	79 - 120				
Xylenes, Total	137.2	10	150	0	91.5	80 - 120				
Surr: 1,2-Dichloroethane-d4	*49.53*	*5.0*	*50*	*0*	*99.1*	*70 - 128*				
Surr: 4-Bromofluorobenzene	*50.1*	*5.0*	*50*	*0*	*100*	*73 - 126*				
Surr: Dibromofluoromethane	*47.26*	*5.0*	*50*	*0*	*94.5*	*71 - 128*				
Surr: Toluene-d8	*50.02*	*5.0*	*50*	*0*	*100*	*73 - 127*				

Note: See Qualifiers Page for a list of qualifiers and their explanation.

Client: Apex Companies
WorkOrder: HS14040491
Project: E3CE-0065 Andover Release Site

QC BATCH REPORT

Batch ID: R232188 **Instrument: VOA5** **Method: SW8260**

MS Sample ID: **HS14040806-03MS** Units: **ug/Kg** Analysis Date: **20-Apr-2014 00:46**
Client ID: Run ID: **VOA5_232188** SeqNo: **2801127** PrepDate: DF: **1**

Analyte	Result	PQL	SPK Val	SPK Ref Value	%REC	Control Limit	RPD Ref Value	%RPD	RPD Limit	Qual
1,2,4-Trimethylbenzene	46.81	5.0	50	0	93.6	79 - 123				
1,2-Dichloroethane	50.85	5.0	50	0	102	73 - 121				
1,3,5-Trimethylbenzene	48.22	5.0	50	0	96.4	70 - 123				
2-Butanone	85.21	10	100	0	85.2	65 - 130				
Benzene	54.47	5.0	50	6.336	96.3	79 - 120				
Cyclohexane	51.46	5.0	50	0	103	74 - 126				
Ethylbenzene	50.25	5.0	50	1.402	97.7	80 - 122				
Isopropylbenzene	48.76	5.0	50	0	97.5	72 - 127				
Methylcyclohexane	48.68	5.0	50	0	97.4	77 - 126				
Naphthalene	37.66	5.0	50	0	75.3	71 - 128				
n-Butylbenzene	42.65	5.0	50	0	85.3	77 - 126				
n-Propylbenzene	47.55	5.0	50	0	95.1	79 - 123				
Toluene	49.1	5.0	50	0.2853	97.6	79 - 120				
Xylenes, Total	148.1	10	150	4.517	95.7	80 - 120				
Surr: 1,2-Dichloroethane-d4	*50.52*	*5.0*	*50*	*0*	*101*	*70 - 128*				
Surr: 4-Bromofluorobenzene	*49.05*	*5.0*	*50*	*0*	*98.1*	*73 - 126*				
Surr: Dibromofluoromethane	*50.48*	*5.0*	*50*	*0*	*101*	*71 - 128*				
Surr: Toluene-d8	*49.85*	*5.0*	*50*	*0*	*99.7*	*73 - 127*				

Note: See Qualifiers Page for a list of qualifiers and their explanation.

Client: Apex Companies
WorkOrder: HS14040491
Project: E3CE-0065 Andover Release Site

QC BATCH REPORT

Batch ID: R232188 **Instrument: VOA5** **Method: SW8260**

MSD Sample ID: **HS14040806-03MSD** Units: **ug/Kg** Analysis Date: **20-Apr-2014 01:10**
Client ID: Run ID: **VOA5_232188** SeqNo: **2801128** PrepDate: DF: **1**

Analyte	Result	PQL	SPK Val	SPK Ref Value	%REC	Control Limit	RPD Ref Value	%RPD	RPD Limit	Qual
1,2,4-Trimethylbenzene	46	5.0	50	0	92.0	79 - 123	46.81	1.74	30	
1,2-Dichloroethane	51.23	5.0	50	0	102	73 - 121	50.85	0.745	30	
1,3,5-Trimethylbenzene	46.91	5.0	50	0	93.8	70 - 123	48.22	2.77	30	
2-Butanone	94.75	10	100	0	94.7	65 - 130	85.21	10.6	30	
Benzene	55.97	5.0	50	6.336	99.3	79 - 120	54.47	2.71	30	
Cyclohexane	55.15	5.0	50	0	110	74 - 126	51.46	6.91	30	
Ethylbenzene	50.74	5.0	50	1.402	98.7	80 - 122	50.25	0.977	30	
Isopropylbenzene	48.98	5.0	50	0	98.0	72 - 127	48.76	0.46	30	
Methylcyclohexane	54.08	5.0	50	0	108	77 - 126	48.68	10.5	30	
Naphthalene	32.38	5.0	50	0	64.8	71 - 128	37.66	15.1	30	S
n-Butylbenzene	41.63	5.0	50	0	83.3	77 - 126	42.65	2.41	30	
n-Propylbenzene	47.71	5.0	50	0	95.4	79 - 123	47.55	0.338	30	
Toluene	49.67	5.0	50	0.2853	98.8	79 - 120	49.1	1.16	30	
Xylenes, Total	146.4	10	150	4.517	94.6	79 - 123	148.1	1.2	30	
Surr: 1,2-Dichloroethane-d4	*48.86*	*5.0*	*50*	*0*	*97.7*	*70 - 128*	*50.52*	*3.34*	*30*	
Surr: 4-Bromofluorobenzene	*48.96*	*5.0*	*50*	*0*	*97.9*	*73 - 126*	*49.05*	*0.188*	*30*	
Surr: Dibromofluoromethane	*49.52*	*5.0*	*50*	*0*	*99.0*	*71 - 128*	*50.48*	*1.92*	*30*	
Surr: Toluene-d8	*49.17*	*5.0*	*50*	*0*	*98.3*	*73 - 127*	*49.85*	*1.37*	*30*	

The following samples were anayzed in this batch: HS14040491-62

Note: See Qualifiers Page for a list of qualifiers and their explanation.

Client: Apex Companies
Project: E3CE-0065 Andover Release Site
WorkOrder: **HS14040491**

QUALIFIERS, ACRONYMS, UNITS

Qualifier	Description
*	Value exceeds Regulatory Limit
a	Not accredited
B	Analyte detected in the associated Method Blank above the Reporting Limit
E	Value above quantitation range
H	Analyzed outside of Holding Time
J	Analyte detected below quantitation limit
M	Manually integrated, see raw data for justification
n	Not offered for accreditation
ND	Not Detected at the Reporting Limit
O	Sample amount is > 4 times amount spiked
P	Dual Column results percent difference > 40%
R	RPD above laboratory control limit
S	Spike Recovery outside laboratory control limits
U	Analyzed but not detected above the MDL

Acronym	Description
DCS	Detectability Check Study
DUP	Method Duplicate
LCS	Laboratory Control Sample
LCSD	Laboratory Control Sample Duplicate
MBLK	Method Blank
MDL	Method Detection Limit
MQL	Method Quantitation Limit
MS	Matrix Spike
MSD	Matrix Spike Duplicate
PDS	Post Digestion Spike
PQL	Practical Quantitaion Limit
SD	Serial Dilution

Unit Reported	Description
mg/Kg	Milligrams per Kilogram
mg/L	Milligrams per Liter

CERTIFICATIONS,ACCREDITATIONS & LICENSES

Agency	Number	Expire Date
Arkansas	AR - 2014	27-Mar-2015
California	06248CA 2013-2014	31-Jul-2014
Dept of Defense	L2231 Rev 3-20-2014	22-Dec-2015
Illinois	003180	09-May-2014
Kansas	E-10352 8/15/2013-2014	31-Jul-2014
Kentucky	95 Year- 2013	30-Apr-2014
Louisiana	03087 2013/2014	30-Jun-2014
North Carolina	624 - 2014	31-Dec-2014
Oklahoma	2013-024	31-Aug-2014
Texas	T104704231-13-12	30-Apr-2014

Client: Apex Companies
Project: E3CE-0065 Andover Release Site
Work Order: HS14040491

SAMPLE TRACKING

Lab Samp ID	Client Sample ID	Action	Date	Person	New Location
HS14040491-01	B-2(2-6)	Login	11-Apr-14 01:02	PMG	5035
HS14040491-01	B-2(2-6)	Login	11-Apr-14 01:02	PMG	5035
HS14040491-02	B-2(13)	Login	11-Apr-14 01:02	PMG	5035
HS14040491-02	B-2(13)	Login	11-Apr-14 01:02	PMG	5035
HS14040491-03	B-2(15.5)	Login	11-Apr-14 01:02	PMG	5035
HS14040491-03	B-2(15.5)	Login	11-Apr-14 01:02	PMG	5035
HS14040491-04	B-2(17)	Login	11-Apr-14 01:02	PMG	5035
HS14040491-04	B-2(17)	Login	11-Apr-14 01:02	PMG	5035
HS14040491-05	B-2(20)	Login	11-Apr-14 01:02	PMG	5035
HS14040491-05	B-2(20)	Login	11-Apr-14 01:02	PMG	5035
HS14040491-06	B-3 (5.0)	Login	11-Apr-14 01:02	PMG	5035
HS14040491-06	B-3 (5.0)	Login	11-Apr-14 01:02	PMG	5035
HS14040491-07	B-3(9.5)	Login	11-Apr-14 01:02	PMG	5035
HS14040491-07	B-3(9.5)	Login	11-Apr-14 01:02	PMG	5035
HS14040491-08	B-3(11.0)	Login	11-Apr-14 01:02	PMG	5035
HS14040491-08	B-3(11.0)	Login	11-Apr-14 01:02	PMG	5035
HS14040491-09	B-3(17.5)	Login	11-Apr-14 01:02	PMG	5035
HS14040491-09	B-3(17.5)	Login	11-Apr-14 01:02	PMG	5035
HS14040491-10	B-3(20)	Login	11-Apr-14 01:02	PMG	5035
HS14040491-10	B-3(20)	Login	11-Apr-14 01:02	PMG	5035
HS14040491-11	B-4(4)	Login	11-Apr-14 01:02	PMG	5035
HS14040491-11	B-4(4)	Login	11-Apr-14 01:02	PMG	5035
HS14040491-12	B-4(9.5)	Login	11-Apr-14 01:02	PMG	5035
HS14040491-12	B-4(9.5)	Login	11-Apr-14 01:02	PMG	5035
HS14040491-13	B-4(14)	Login	11-Apr-14 01:02	PMG	5035
HS14040491-13	B-4(14)	Login	11-Apr-14 01:02	PMG	5035
HS14040491-14	B-4(15)	Login	11-Apr-14 01:02	PMG	5035
HS14040491-14	B-4(15)	Login	11-Apr-14 01:02	PMG	5035
HS14040491-15	B-4(16.5)	Login	11-Apr-14 01:02	PMG	5035
HS14040491-15	B-4(16.5)	Login	11-Apr-14 01:02	PMG	5035
HS14040491-16	B-4(20)	Login	11-Apr-14 01:02	PMG	5035
HS14040491-16	B-4(20)	Login	11-Apr-14 01:02	PMG	5035
HS14040491-17	B-5(5)	Login	11-Apr-14 01:02	PMG	5035
HS14040491-17	B-5(5)	Login	11-Apr-14 01:02	PMG	5035
HS14040491-18	B-5(10)	Login	11-Apr-14 01:02	PMG	5035
HS14040491-18	B-5(10)	Login	11-Apr-14 01:02	PMG	5035
HS14040491-19	B-5(11.5)	Login	11-Apr-14 01:02	PMG	5035
HS14040491-19	B-5(11.5)	Login	11-Apr-14 01:02	PMG	5035
HS14040491-20	B-5(15)	Login	11-Apr-14 01:02	PMG	5035
HS14040491-20	B-5(15)	Login	11-Apr-14 01:02	PMG	5035

HS14040491-21	B-5(18)	Login	11-Apr-14 01:02	PMG	5035
HS14040491-21	B-5(18)	Login	11-Apr-14 01:02	PMG	5035
HS14040491-22	B-5(21)	Login	11-Apr-14 01:02	PMG	5035
HS14040491-22	B-5(21)	Login	11-Apr-14 01:02	PMG	5035
HS14040491-23	B-5(24)	Login	11-Apr-14 01:02	PMG	5035
HS14040491-23	B-5(24)	Login	11-Apr-14 01:02	PMG	5035
HS14040491-24	B-8(5)	Login	11-Apr-14 01:02	PMG	5035
HS14040491-24	B-8(5)	Login	11-Apr-14 01:02	PMG	5035
HS14040491-25	B-8(10)	Login	11-Apr-14 01:02	PMG	5035
HS14040491-25	B-8(10)	Login	11-Apr-14 01:02	PMG	5035
HS14040491-26	B-8(15)	Login	11-Apr-14 01:02	PMG	5035
HS14040491-26	B-8(15)	Login	11-Apr-14 01:02	PMG	5035
HS14040491-27	B-8(17)	Login	11-Apr-14 01:02	PMG	5035
HS14040491-27	B-8(17)	Login	11-Apr-14 01:02	PMG	5035
HS14040491-28	B-8(18.5)	Login	11-Apr-14 01:02	PMG	5035
HS14040491-28	B-8(18.5)	Login	11-Apr-14 01:02	PMG	5035
HS14040491-29	B-6(2)	Login	11-Apr-14 01:02	PMG	5035
HS14040491-29	B-6(2)	Login	11-Apr-14 01:02	PMG	5035
HS14040491-30	B-6(4)	Login	11-Apr-14 01:02	PMG	5035
HS14040491-30	B-6(4)	Login	11-Apr-14 01:02	PMG	5035
HS14040491-31	B-6(9)	Login	11-Apr-14 01:02	PMG	5035
HS14040491-31	B-6(9)	Login	11-Apr-14 01:02	PMG	5035
HS14040491-32	B-6(15)	Login	11-Apr-14 01:07	PMG	5035
HS14040491-32	B-6(15)	Login	11-Apr-14 01:07	PMG	5035
HS14040491-33	B-6(18)	Login	11-Apr-14 01:15	PMG	5035
HS14040491-33	B-6(18)	Login	11-Apr-14 01:15	PMG	5035
HS14040491-34	B-6(20)	Login	11-Apr-14 01:15	PMG	5035
HS14040491-34	B-6(20)	Login	11-Apr-14 01:15	PMG	5035
HS14040491-35	B-7(2)	Login	11-Apr-14 01:15	PMG	5035
HS14040491-35	B-7(2)	Login	11-Apr-14 01:15	PMG	5035
HS14040491-36	B-7(4)	Login	11-Apr-14 01:15	PMG	5035
HS14040491-36	B-7(4)	Login	11-Apr-14 01:15	PMG	5035
HS14040491-37	B-7(10)	Login	11-Apr-14 01:15	PMG	5035
HS14040491-37	B-7(10)	Login	11-Apr-14 01:15	PMG	5035
HS14040491-38	B-7(11.5)	Login	11-Apr-14 01:15	PMG	5035
HS14040491-38	B-7(11.5)	Login	11-Apr-14 01:15	PMG	5035
HS14040491-39	B-7(15.5)	Login	11-Apr-14 01:15	PMG	5035
HS14040491-39	B-7(15.5)	Login	11-Apr-14 01:15	PMG	5035
HS14040491-40	B-7(19)	Login	11-Apr-14 01:15	PMG	5035
HS14040491-40	B-7(19)	Login	11-Apr-14 01:15	PMG	5035
HS14040491-41	B-9(5.5)	Login	11-Apr-14 01:15	PMG	5035
HS14040491-41	B-9(5.5)	Login	11-Apr-14 01:15	PMG	5035
HS14040491-42	B--9(10)	Login	11-Apr-14 01:15	PMG	5035
HS14040491-42	B--9(10)	Login	11-Apr-14 01:15	PMG	5035
HS14040491-43	B-9(15)	Login	11-Apr-14 01:15	PMG	5035
HS14040491-43	B-9(15)	Login	11-Apr-14 01:15	PMG	5035

HS14040491-44	B-9(18)	Login	11-Apr-14 01:15	PMG	5035
HS14040491-44	B-9(18)	Login	11-Apr-14 01:15	PMG	5035
HS14040491-45	B-10(2)	Login	11-Apr-14 01:15	PMG	5035
HS14040491-45	B-10(2)	Login	11-Apr-14 01:15	PMG	5035
HS14040491-46	B-10(4)	Login	11-Apr-14 01:15	PMG	5035
HS14040491-46	B-10(4)	Login	11-Apr-14 01:15	PMG	5035
HS14040491-47	B-10(10)	Login	11-Apr-14 01:15	PMG	5035
HS14040491-47	B-10(10)	Login	11-Apr-14 01:15	PMG	5035
HS14040491-48	B-10(14.5)	Login	11-Apr-14 01:15	PMG	5035
HS14040491-48	B-10(14.5)	Login	11-Apr-14 01:15	PMG	5035
HS14040491-49	B-10(16)	Login	11-Apr-14 01:15	PMG	5035
HS14040491-49	B-10(16)	Login	11-Apr-14 01:15	PMG	5035
HS14040491-50	B-10(20)	Login	11-Apr-14 01:15	PMG	5035
HS14040491-50	B-10(20)	Login	11-Apr-14 01:15	PMG	5035
HS14040491-51	B-11(5)	Login	11-Apr-14 01:15	PMG	5035
HS14040491-51	B-11(5)	Login	11-Apr-14 01:15	PMG	5035
HS14040491-52	B-11(10)	Login	11-Apr-14 01:15	PMG	5035
HS14040491-52	B-11(10)	Login	11-Apr-14 01:15	PMG	5035
HS14040491-53	B-11(14.5)	Login	11-Apr-14 01:15	PMG	5035
HS14040491-53	B-11(14.5)	Login	11-Apr-14 01:15	PMG	5035
HS14040491-54	B-11(20)	Login	11-Apr-14 01:15	PMG	5035
HS14040491-54	B-11(20)	Login	11-Apr-14 01:15	PMG	5035
HS14040491-55	B-12(5)	Login	11-Apr-14 01:15	PMG	5035
HS14040491-55	B-12(5)	Login	11-Apr-14 01:15	PMG	5035
HS14040491-56	B-12(10)	Login	11-Apr-14 01:15	PMG	5035
HS14040491-56	B-12(10)	Login	11-Apr-14 01:15	PMG	5035
HS14040491-57	B-12(14)	Login	11-Apr-14 01:15	PMG	5035
HS14040491-57	B-12(14)	Login	11-Apr-14 01:15	PMG	5035
HS14040491-58	B-12(15)	Login	11-Apr-14 01:15	PMG	5035
HS14040491-58	B-12(15)	Login	11-Apr-14 01:15	PMG	5035
HS14040491-59	B-12(18)	Login	11-Apr-14 01:15	PMG	5035
HS14040491-59	B-12(18)	Login	11-Apr-14 01:15	PMG	5035
HS14040491-60	B-13(5)	Login	11-Apr-14 01:15	PMG	5035
HS14040491-60	B-13(5)	Login	11-Apr-14 01:15	PMG	5035
HS14040491-61	B-13(10)	Login	11-Apr-14 01:17	PMG	5035
HS14040491-61	B-13(10)	Login	11-Apr-14 01:17	PMG	5035
HS14040491-62	B-13(13)	Login	11-Apr-14 01:17	PMG	5035
HS14040491-62	B-13(13)	Login	11-Apr-14 01:17	PMG	5035
HS14040491-63	B-13(18)	Login	11-Apr-14 01:17	PMG	5035
HS14040491-63	B-13(18)	Login	11-Apr-14 01:17	PMG	5035
HS14040491-64	B-13(19)	Login	11-Apr-14 01:17	PMG	5035
HS14040491-64	B-13(19)	Login	11-Apr-14 01:17	PMG	5035
HS14040491-65	Trip Blank-1	Login	11-Apr-14 01:28	PMG	VW-3
HS14040491-66	Trip Blank-2	Login	11-Apr-14 01:28	PMG	VW-3
HS14040491-67	Trip Blank-3	Login	11-Apr-14 01:28	PMG	VW-3
HS14040491-68	Trip Blank-4	Login	11-Apr-14 01:28	PMG	VW-3

HS14040491-69	Trip Blank-5	Login	11-Apr-14 01:28	PMG	VW-3
HS14040491-70	Trip Blank-6	Login	11-Apr-14 01:28	PMG	VW-3
HS14040491-71	Trip Blank-7	Login	11-Apr-14 01:28	PMG	VW-3

ALS Group USA, Corp Date: 28-Apr-14

Sample Receipt Checklist

Client Name: Apex-Portland
Date/Time Received: **11-Apr-2014 09:25**
Work Order: HS14040491
Received by: **LOT**

Checklist completed by: *Paresh M. Giga* eSignature 11-Apr-2014 Date
Reviewed by: *Bethany McDaniel* eSignature 15-Apr-2014 Date

Matrices: **Soil/Water**
Carrier name: **FedEx**

	Yes	No	Not Present
Shipping container/cooler in good condition?	☑	☐	☐
Custody seals intact on shipping container/cooler?	☑	☐	☐
Custody seals intact on sample bottles?	☐	☑	☐
Chain of custody present?	☑	☐	
Chain of custody signed when relinquished and received?	☑	☐	
Chain of custody agrees with sample labels?	☐	☑	
Samples in proper container/bottle?	☑	☐	
Sample containers intact?	☑	☐	
Sufficient sample volume for indicated test?	☑	☐	
All samples received within holding time?	☑	☐	
Container/Temp Blank temperature in compliance?	☑	☐	

Temperature(s)/Thermometer(s): 0.3c/03/c,02c/02c,0.4c/0.4c,0.6c/0.6c,1.4c/1.4c,2.0c/2.0c,0.5c/0.5c, IR3

Cooler(s)/Kit(s): 6074,6075,6071,6077,6076,6078,6079,6073

Date/Time sample(s) sent to storage: 4/11/14 13:30

	Yes	No	No VOA vials submitted / N/A
Water - VOA vials have zero headspace?	☑	☐	No VOA vials submitted ☐
Water - pH acceptable upon receipt?	☐	☐	N/A ☑
pH adjusted?	☐	☑	N/A ☐

pH adjusted by:

Login Notes: 0.4c/0.4c C/U. Did not receive a Trip Blank in cooler No : 6071 - Hence logged in 7 x Trips

Client Contacted: Date Contacted: Person Contacted:

Contacted By: 0 Regarding:

Comments:

Corrective Action:

ALS Environmental

Cincinnati, OH +1 513 733 5336 | Fort Collins, CO +1 970 490 1511
Everett, WA +1 425 356 2600 | Holland, MI +1 616 399 6070

Chain of Custody Form

Page 1 of 7

COC ID: 93230

HS14040491

Apex Companies
E3CE-0065 Andover Release Site

ALS Project Manager:

Customer Information		Project Information	
Purchase Order		Project Name	Andover Release Site
Work Order		Project Number	E3CE-0065
Company Name	Apex Companies	Bill To Company	Apex Companies
Send Report To	Samuel Jackson	Invoice Attn	Samuel Jackson
Address	3015 SW First Avenue	Address	3015 SW First Avenue
City/State/Zip	Portland, OR 97201	City/State/Zip	Portland, OR 97201
Phone	(503) 924-4704	Phone	(503) 924-4704
Fax		Fax	
e-Mail Address	sjackson@apexcos.com	e-Mail Address	

A: VOCs (8260/5035) 14 compound Select List
B: GRO - VPH OA-1

NOTE: SAMPLES FROZEN WITHIN 8 HOURS OF SAMPLE COLLECTION

No.	Sample Description	Date	Time	Matrix	Pres.	# Bottles	A	B	C	D	E	F	G	H	I	J	Hold
1	B-2(2-6)	04-07-14	1530	S	9	6	X	X									
2	B-2(13)	04-07-14	1600	S	9	6	X	X									
3	B-2(15.5)	04-07-14	1625	S	9	6	X	X									
4	B-2 (17)	04-07-14	1700	S	9	6	X	X									
5	B-2(20)	04-07-14	1715	S	9	6	X	X									
6	B-3 (5.0)	04-08-14	0925	S	9	6	X	X									
7	B-3 (9.5)	04-08-14	0940	S	9	6	X	X									
8	B-3 (11.0)	04-08-14	1000	S	9	6	X	X									
9	B-3 (17.5)	04-08-14	1030	S	9	6	X	X									
10	B-3 (20)	04-08-14	1040	S	9	6	X	X									

Sampler(s) Please Print & Sign: MIKE WILLISON

Shipment Method: FEDEX OVERNIGHT

Required Turnaround Time: (Check Box) ☑ Std 10 Wk Days ☐ 5 Wk Days ☐ 2 Wk Days ☐ 24 Hour ☐ Other

Results Due Date:

Relinquished by: Date: 4-10 Time: 1900 Received by:

Relinquished by: Date: 4-11 Time: 9:25 Received by (Laboratory):

Logged by (Laboratory): Date: Time: Checked by (Laboratory):

Notes: Andover Quail Crossing Soil Investigation

Cooler ID	Cooler Temp.

QC Package: (Check One Box Below)
☑ Level II Std QC
☐ Level III Std QC/Raw Data
☐ Level IV SW846/CLP
☐ Other / EDD
☐ TRRP Checklist
☐ TRRP Level IV

Preservative Key: 1-HCl 2-HNO_3 3-H_2SO_4 4-NaOH 5-$Na_2S_2O_3$ 6-$NaHSO_4$ 7-Other 8-4°C 9-5035

Note: 1. Any changes must be made in writing once samples and COC Form have been submitted to ALS Environmental.
2. Unless otherwise agreed in a formal contract, services provided by ALS Environmental are expressly limited to the terms and conditions stated on the reverse.
3. The Chain of Custody is a legal document. All information must be completed accurately.

Copyright 2011 by ALS Environmental.

ALS Environmental

Cincinnati, OH +1 513 733 5336 | Fort Collins, CO +1 970 490 1511 | Everett, WA +1 425 356 2600 | Holland, MI +1 616 399 6070 | Houston, TX +1 281 530 5656 | Middletown, PA +1 717 944 5541 | Spring City, PA +1 610 948 4903 | Salt Lake City, UT +1 801 266 7700 | South Charleston, WV +1 304 356 3168 | York, PA +1 717 505 5280

Chain of Custody Form

Page 2 of 7

COC ID: 93279

ALS Project Manager:

ALS Work Order #: H14040491

Customer Information		Project Information		Parameter/Method Request for Analysis	
Purchase Order		Project Name	Andover Release Site	A	VOCs (8260/5035) 14 compound Selec. List
Work Order		Project Number	E3CE-0066	B	GRO - VPH OA-1
Company Name	Apex Companies	Bill To Company	Apex Companies	C	
Send Report To	Samuel Jackson	Invoice Attn	Samuel Jackson	D	
Address	3015 SW First Avenue	Address	3015 SW First Avenue	E, F	
City/State/Zip	Portland, OR 97201	City/State/Zip	Portland, OR 97201	G	NOTE: SAMPLES FROZEN WITHIN 8 HOURS
Phone	(503) 924-4704	Phone	(503) 924-4704	H	OF SAMPLE COLLECTION
Fax		Fax		I	
e-Mail Address	sjackson@apexcos.com	e-Mail Address		J	

No.	Sample Description	Date	Time	Matrix	Pres.	# Bottles	A	B	C	D	E	F	G	H	I	J	Hold
1	B-4 (4)	04-08-14	1105	S	9	6	X	X									
2	B-4 (9.5)	04-08-14	1130	S	9	6	X	X									
3	B-4 (14)	04-08-14	1155	S	9	6	X	X									
4	B-4 (15)	04-08-14	1205	S	9	6	X	X									
5	B-4 (16.5)	04-08-14	1225	S	9	6	X	X									
6	B-4 (20)	04-08-14	1245	S	9	6	X	X									
7	B-5 (5)	04-08-14	1315	S	9	6	X	X									
8	B-5 (10)	04-08-14	1340	S	9	6	X	X									
9	B-5 (11.5)	04-08-14	1350	S	9	6	X	X									
10	B-5 (15)	04-08-14	1425	S	9	6	X	X									

Sampler(s) Please Print & Sign: MIKE WATSON

Shipment Method: FEDEX OVERNIGHT

Required Turnaround Time: (Check Box) ☑ Std 10 WK Days ☐ 5 WK Days ☐ Other ☐ 3 WK Days ☐ 24 Hour

Results Due Date:

Relinquished by: Date: 4-10 Time: 1900 Received by:

Relinquished by: Date: 4-11 Time: 9:25 Received by (Laboratory):

Logged by (Laboratory): Date: Time: Checked by (Laboratory):

Notes: Andover Quail Crossing Soil Investigation

Cooler ID	Cooler Temp.

QC Package: (Check One Box Below)
☑ Level II Std QC ☐ TRRP Check List
☐ Level III Std QC/Raw Data ☐ TRRP Level IV
☐ Level IV SW846/CLP
☐ Other / EDD

Preservative Key: 1-HCl 2-HNO_3 3-H_2SO_4 4-NaOH 5-$Na_2S_2O_3$ 6-$NaHSO_4$ 7-Other 8-4°C 9-5035

Note: 1. Any changes must be made in writing once samples and COC Form have been submitted to ALS Environmental.
2. Unless otherwise agreed in a formal contract, services provided by ALS Environmental are expressly limited to the terms and conditions stated on the reverse.
3. The Chain of Custody is a legal document. All information must be completed accurately.

Copyright 2011 by ALS Environmental.

ALS Environmental

Cincinnati, OH +1 513 733 5336 | Fort Collins, CO +1 970 490 1511 | Everett, WA +1 425 356 2600 | Holland, MI +1 616 399 6070 | Houston, TX +1 281 530 5656 | Middletown, PA +1 717 944 5541 | Spring City, PA +1 610 948 4903 | Salt Lake City, UT +1 801 266 7700 | South Charleston, WV +1 304 356 3168 | York, PA +1 717 505 5280

Chain of Custody Form

Page 2 of 7

COC ID: 33278

ALS Project Manager:

ALS Work Order #: KS1404491

Customer Information		Project Information		Parameter/Method Request for Analysis	
Purchase Order		Project Name	Andover Release Site	A	VOCs (8260/5035) 14 composite Select List
Work Order		Project Number	E3CE-0065	B	GRO - VPH QA-1
Company Name	Apex Companies	Bill To Company	Apex Companies	C	
Send Report To	Samuel Jackson	Invoice Attn	Samuel Jackson	D	
Address	3015 SW First Avenue	Address	3015 SW First Avenue	E	
				F	
City/State/Zip	Portland, OR 97201	City/State/Zip	Portland, OR 97201	G	NOTE: SAMPLES FROZEN W/1 8 HOURS OF SAMPLE COLLECTION
Phone	(503) 924-4704	Phone	(503) 924-4704	H	
Fax		Fax		I	
e-Mail Address	sjackson@apexcos.com	e-Mail Address		J	

No.	Sample Description	Date	Time	Matrix	Pres.	# Bottles	A	B	C	D	E	F	G	H	I	J	Hold
1	B-5 (18)	04-08-14	1500	S	9	6	X	X									
2	B-5 (21)	04-08-14	1515	S	9	6	X	X									
3	B-5 (24)	04-08-14	1530	S	9	6	X	X									
4	B-8 (5)	04-08-14	1620	S	9	6	X	X									
5	B-8 (10)	04-08-14	1630	S	9	6	X	X									
6	B-8 (15)	04-08-14	1700	S	9	6	X	X									
7	B-8 (17)	04-08-14	1740	S	9	6	X	X									
8	B-8 (18.5)	04-08-14	1725	S	9	6	X	X									
9	B-6 (2)	04-09-14	0900	S	9	6	X	X									
10	B-6 (4)	04-09-14	0905	S	9	6	X	X									

Sampler(s) Please Print & Sign: MIKE WHITSON

Shipment Method: FEDEX OVERNIGHT

Required Turnaround Time: (Check Box) ☑ Std 10 WK Days ☐ 5 WK Days ☐ 2 WK Days ☐ 24 Hr-ut ☐ Other

Results Due Date:

Relinquished by: Date: 4-10 Time: 1900 Received by:

Relinquished by: Date: 4-11 Time: 9:25 Received by (Laboratory):

Logged by (Laboratory): Date: Time: Checked by (Laboratory):

Notes: Andover Quail Crossing Soil Investigation

Cooler ID	Cooler Temp.

QC Package: (Check One Box Below)
☑ Level II Std QC
☐ Level III Std QC/Raw Data
☐ Level IV SW846/CLP
☐ Other / EDD
☐ TRRP CheckList
☐ TRRP Level IV

Preservative Key: 1-HCl 2-HNO_3 3-H_2SO_4 4-NaOH 5-$Na_2S_2O_3$ 6-$NaHSO_4$ 7-Other 8-4°C 9-5035

Note: 1. Any changes must be made in writing once samples and COC Form have been submitted to ALS Environmental.
2. Unless otherwise agreed in a formal contract, services provided by ALS Environmental are expressly limited to the terms and conditions stated on the reverse.
3. The Chain of Custody is a legal document. All information must be completed accurately.

Copyright 2011 by ALS Environmental.

ALS Environmental

Cincinnati, OH +1 513 733 5336 | Fort Collins, CO +1 970 490 1511 | Houston, TX +1 281 530 5656 | Spring City, PA +1 610 948 4903 | South Charleston, WV +1 304 356 3168
Everett, WA +1 425 356 2600 | Holland, MI +1 616 399 6070 | Middletown, PA +1 717 944 5541 | Salt Lake City, UT +1 801 266 7700 | York, PA +1 717 505 5280

Chain of Custody Form

Page 7 of 7

COC ID: 33276

ALS Project Manager:

ALS Work Order #: HS14040491

Customer Information		Project Information		Parameter/Method Request for Analysis	
Purchase Order		Project Name	Andover Release Site	A	VOCs (8260/5035) 14 compound Selec: List
Work Order		Project Number	E3CE-0065	B	GRO - VPH OA-1
Company Name	Apex Companies	Bill To Company	Apex Companies	C	
Send Report To	Samuel Jackson	Invoice Attn	Samuel Jackson	D	
Address	3015 SW First Avenue	Address	3015 SW First Avenue	E	
				F	
City/State/Zip	Portland, OR 97201	City/State/Zip	Portland, OR 97201	G	NOTE: SAMPLES PLACED ON DRY ICE AFTER SAMPLING
Phone	(503) 924-4704	Phone	(503) 924-4704	H	
Fax		Fax		I	
e-Mail Address	sjackson@apexcos.com	e-Mail Address		J	

No.	Sample Description	Date	Time	Matrix	Pres.	# Bottles	A	B	C	D	E	F	G	H	I	J	Hold
1	B-6 (9)	04-09-14	0920	S	9	6	X	X									
2	B-6 (15)	04-09-14	0945	S	9	6	X	X									
3	B-6 (18)	04-09-14	1000	S	9	6	X	X									
4	B-6 (20)	04-09-14	1010	S	9	6	X	X									
5	B-7 (2)	04-09-14	1045	S	9	6	X	X									
6	B-7 (4)	04-09-14	1050	S	9	6	X	X									
7	B-7 (10)	04-09-14	1110	S	9	6	X	X									
8	B-7 (11.5)	04-09-14	1120	S	9	6	X	X									
9	B-7 (15.5)	04-09-14	1135	S	9	6	X	X									
10	B-7 (19)	04-09-14	1200	S	9	6	X	X									

Sampler(s) Please Print & Sign: MIKE WHITSON

Shipment Method: FEDEX OVERNIGHT

Required Turnaround Time: (Check Box) ☑ Std 10 WK Days ☐ 5 WK Days ☐ Other ☐ 2 WK Days ☐ 24 Hour

Results Due Date:

Relinquished by: Date: 4-10 Time: 1900 Received by:

Relinquished by: Date: 4-11 Time: 9:25 Received by (Laboratory):

Logged by (Laboratory): Date: Time: Checked by (Laboratory):

Notes: Andover Quail Crossing Soil Investigation

Cooler ID	Cooler Temp.

QC Package: (Check One Box Below)
☑ Level II Std QC
☐ Level III Std QC/Raw Data
☐ Level IV SW846/CLP
☐ Other / EDD
☐ TRRP Check List
☐ TRRP Level IV

Preservative Key: 1-HCl 2-HNO_3 3-H_2SO_4 4-NaOH 5-$Na_2S_2O_3$ 6-$NaHSO_4$ 7-Other 8-4°C 9-5035

Note: 1. Any changes must be made in writing once samples and COC Form have been submitted to ALS Environmental.
2. Unless otherwise agreed in a formal contract, services provided by ALS Environmental are expressly limited to the terms and conditions stated on the reverse.
3. The Chain of Custody is a legal document. All information must be completed accurately.

Copyright 2011 by ALS Environmental.

ALS Environmental

Cincinnati, OH +1 513 733 5336 | Fort Collins, CO +1 970 490 1511 | Everett, WA +1 425 356 2600 | Holland, MI +1 616 399 6070 | Houston, TX +1 281 530 5656 | Spring City, PA +1 610 948 4903 | South Charleston, WV +1 304 356 3168 | Middletown, PA +1 717 944 5541 | Salt Lake City, UT +1 801 266 7700 | York, PA +1 717 505 5280

Chain of Custody Form

Page 5 of 7

COC ID: 93277

ALS Project Manager:

ALS Work Order #: H1404049

Customer Information		Project Information		Parameter/Method Request for Analysis	
Purchase Order		Project Name	Andover Release Site	A	VOCs (8260/5035) 14 compound Select List
Work Order		Project Number	E3CE-0065	B	GRO - VPH OA-1
Company Name	Apex Companies	Bill To Company	Apex Companies	C	
Send Report To	Samuel Jackson	Invoice Attn	Samuel Jackson	D	
Address	3015 SW First Avenue	Address	3015 SW First Avenue	E	
				F	
City/State/Zip	Portland, OR 97201	City/State/Zip	Portland, OR 97201	G	NOTE: SAMPLES PLACED ON DRY ICE AFTER SAMPLING
Phone	(503) 924-4704	Phone	(503) 924-4704	H	
Fax		Fax		I	
e-Mail Address	sjackson@apexcos.com	e-Mail Address		J	

No.	Sample Description	Date	Time	Matrix	Pres.	# Bottles	A	B	C	D	E	F	G	H	I	J	Hold
1	B-9 (5.5)	04-09-14	1340	S	9	6	X	X									
2	B-9 (10)	04-09-14	1350	S	9	6	X	X									
3	B-9 (15)	04-09-14	1405	S	9	6	X	X									
4	B-9 (18)	04-09-14	1420	S	9	6	X	X									
5	B-10 (2)	04-09-14	1510	S	9	6	X	X									
6	B-10 (4)	04-09-14	1515	S	9	6	X	X									
7	B-10 (10)	04-09-14	1540	S	9	6	X	X									
8	B-10 (14.5)	04-09-14	1600	S	9	6	X	X									
9	B-10 (16)	04-09-14	1605	S	9	6	X	X									
10	B-10 (20)	04-09-14	1620	S	9	6	X	X									

Sampler(s) Please Print & Sign: MIKE WHITSON

Shipment Method: FEDEX OVERNIGHT

Required Turnaround Time: (Check Box) ☑ Std 10 WK Days ☐ 5 WK Days ☐ 2 WK Days ☐ 24 Hour ☐ Other

Results Due Date:

Relinquished by: Date: 4-10 Time: 1900 Received by:

Relinquished by: Date: 4-11-14 Time: 9:25 Received by (Laboratory):

Logged by (Laboratory): Date: Time: Checked by (Laboratory):

Notes: Andover Quail Crossing Soil Investigation

Cooler ID	Cooler Temp.

QC Package: (Check One Box Below)

☑ Level II Std QC ☐ TRRP CheckList
☐ Level III Std QC/Raw Data ☐ TRRP Level IV
☐ Level IV SW846/CLP
☐ Other / EDD

Preservative Key: 1-HCl 2-HNO_3 3-H_2SO_4 4-NaOH 5-$Na_2S_2O_3$ 6-$NaHSO_4$ 7-Other 8-4°C 9-5035

Note: 1. Any changes must be made in writing once samples and COC Form have been submitted to ALS Environmental.
2. Unless otherwise agreed in a formal contract, services provided by ALS Environmental are expressly limited to the terms and conditions stated on the reverse.
3. The Chain of Custody is a legal document. All information must be completed accurately.

Copyright 2011 by ALS Environmental.

ALS Environmental

Cincinnati, OH +1 513 733 5336 | Fort Collins, CO +1 970 490 1511 | Everett, WA +1 425 356 2600 | Holland, MI +1 616 399 6070 | Houston, TX +1 281 530 5656 | Spring City, PA +1 610 948 4903 | South Charleston, WV +1 304 356 3168 | Middletown, PA +1 717 944 5541 | Salt Lake City, UT +1 801 266 7700 | York, PA +1 717 505 5280

Chain of Custody Form

Page 6 of 7

COC ID: 33272

ALS Project Manager:

ALS Work Order #: 1304 0491.

Customer Information		Project Information		Parameter/Method Request for Analysis	
Purchase Order		Project Name	Andover Release Site	A	VOCs (8260/5035) 14 compound Select List
Work Order		Project Number	E3CE-0065	B	GRO - VPH Ok-I
Company Name	Apex Companies	Bill To Company	Apex Companies	C	
Send Report To	Samuel Jackson	Invoice Attn	Samuel Jackson	D	
Address	3015 SW First Avenue	Address	3015 SW First Avenue	E	
				F	
City/State/Zip	Portland, OR 97201	City/State/Zip	Portland, OR 97201	G	NOTE: SAMPLES PLACED ON DRY ICE
Phone	(503) 924-4704	Phone	(503) 924-4704	H	AFTER COLLECTION
Fax		Fax		I	
e-Mail Address	sjackson@apexcos.com	e-Mail Address		J	

No.	Sample Description	Date	Time	Matrix	Pres.	# Bottles	A	B	C	D	E	F	G	H	I	J	Hold
1	B-11 (5)	4-9	1655	S	9	6	X	X									
2	B-11 (10)	4-9	1705	S	9	6	X	X									
3	B-11 (14.5)	4-9	1725	S	9	6	X	X									
4	B-11 (20)	4-9	1740	S	9	6	X	X									
5	B-12 (5)	4-10	0855	S	9	6	X	X									
6	B-12 (10)	4-10	0910	S	9	6	X	X									
7	B-12 (14)	4-10	0930	S	9	6	X	X									
8	B-12 (15)	4-10	0945	S	9	6	X	X									
9	B-12 (18)	4-10	1000	S	9	6	X	X									
10	B-13 (5)	4-10	1045	S	9	6	X	X									

Sampler(s) Please Print & Sign: MIKE WHITSON

Shipment Method: FEDEX OVERNIGHT

Required Turnaround Time: (Check Box) [✓] Std. 10 WK Days [ ] 5 WK Days [ ] 2 WK Days [ ] 24 Hour [ ] Other

Results Due Date:

Relinquished by: Date: 4-10 Time: 1900 Received by:

Relinquished by: Date: 4-11 Time: 9:25 Received by (Laboratory):

Logged by (Laboratory): Date: Time: Checked by (Laboratory):

Notes: Andover Quail Crossing Soil Investigation

Cooler ID	Cooler Temp.

QC Package: (Check One Box Below)

- [✓] Level II Std QC
- [ ] Level III Std QC/Raw Data
- [ ] Level IV SW846/CLP
- [ ] Other / EDD
- [ ] TRRP Checklist
- [ ] TRRP Level IV

Preservative Key: 1-HCl 2-HNO_3 3-H_2SO_4 4-NaOH 5-$Na_2S_2O_3$ 6-$NaHSO_4$ 7-Other 8-4°C 9-5035

Note: 1. Any changes must be made in writing once samples and COC Form have been submitted to ALS Environmental.
2. Unless otherwise agreed in a formal contract, services provided by ALS Environmental are expressly limited to the terms and conditions stated on the reverse.
3. The Chain of Custody is a legal document. All information must be completed accurately.

Copyright 2011 by ALS Environmental.

ALS Environmental

Cincinnati, OH +1 513 733 5336 | Fort Collins, CO +1 970 490 1511 | Houston, TX +1 281 530 5656 | Spring City, PA +1 610 948 4903 | South Charleston, WV +1 304 356 3168
Everett, WA +1 425 356 2600 | Holland, MI +1 616 399 6070 | Middletown, PA +1 717 944 5541 | Salt Lake City, UT +1 801 266 7700 | York, PA +1 717 505 5280

Chain of Custody Form

Page 7 of 7

COC ID: 93271

ALS Project Manager:

ALS Work Order #: HS14004491

Customer Information		Project Information		Parameter/Method Request for Analysis	
Purchase Order		Project Name	Andover Release Site	A	VOCs (8260/5035) 14 compound Select List
Work Order		Project Number	E3CE-0095	B	GRO - VPH OA-1
Company Name	Apex Companies	Bill To Company	Apex Companies	C	
Send Report To	Samuel Jackson	Invoice Attn	Samuel Jackson	D	
Address	3015 SW First Avenue	Address	3015 SW First Avenue	E	
				F	
City/State/Zip	Portland, OR 97201	City/State/Zip	Portland, OR 97201	G	NOTE: SAMPLES PLACED ON ICE AFTER COLLECTION
Phone	(503) 924-4704	Phone	(503) 924-4704	H	
Fax		Fax		I	
e-Mail Address	sjackson@apexcos.com	e-Mail Address		J	

No.	Sample Description	Date	Time	Matrix	Pres.	# Bottles	A	B	C	D	E	F	G	H	I	J	Hold
1	B-13 (10)	04-10	1115	S	9	6	X	X									
2	B-13 (13)	04-10	1130	S	9	6	X	X									
3	B-13 (18)	04-10	1155	S	9	6	X	X									
4	B-13 (19)	04-10	1200	S	9	6	X	X									
5	TRIP BLANK-1	-	-	W	1	2	X										
6	TRIP BLANK-2	-	-	W	1	2	X										
7	TRIP BLANK-3	-	-	W	1	2	X										
8	TRIP BLANK-4	-	-	W	1	2	X										
9	TRIP BLANK-5	-	-	W	1	2	X										
10	TRIP BLANK-6	-	-	W	1	2	X										
	TRIP BLANK-7	-	-	W	1	2	X										
	TRIP BLANK-8	-	-	W	1	2	X										

Sampler(s) Please Print & Sign: MIKE WHITSON

Shipment Method: FEDEX OVERNIGHT

Required Turnaround Time: (Check Box) ☑ Std 10 WK Days ☐ 5 WK Days ☐ 2 WK Days ☐ 24 Hour ☐ Other _____

Results Due Date:

Relinquished by: Date: 4-10 Time: 1900 Received by:

Relinquished by: Date: 4-11 Time: 9:35 Received by (Laboratory):

Logged by (Laboratory): Date: Time: Checked by (Laboratory):

Notes: Andover Quail Crossing Soil Investigation

Cooler ID	Cooler Temp.

QC Package: (Check One Box Below)
☑ Level II Std QC
☐ Level III Std QC/Raw Data
☐ Level IV SW846/CLP
☐ Other / EDD
☐ TRRP Checklist
☐ TRRP Level IV

Preservative Key: 1-HCl 2-HNO_3 3-H_2SO_4 4-NaOH 5-$Na_2S_2O_3$ 6-$NaHSO_4$ 7-Other 8-4°C 9-5035

Note: 1. Any changes must be made in writing once samples and COC Form have been submitted to ALS Environmental.
2. Unless otherwise agreed in a formal contract, services provided by ALS Environmental are expressly limited to the terms and conditions stated on the reverse.
3. The Chain of Custody is a legal document. All information must be completed accurately.

Copyright 2011 by ALS Environmental.

9 of 9
MPS# 7949 3869 9323
Mstr# 8052 9842 2850

FRI – 11 APR 10:30A
PRIORITY OVERNIGHT

AB SGRA

77099
TX-US IAH

7 of 9
MPS# 7949 3869 9301
Mstr# 8052 9842 2850

FRI – 11 APR 10:30A
PRIORITY OVERNIGHT

AB SGRA

77099
TX-US IAH

4 of 9
MPS# 7949 3869 9275
Mstr# 8052 9842 2850

FRI – 11 APR 10:30A
PRIORITY OVERNIGHT

AB SGRA

77099
TX-US IAH

ALS Environmental
10450 Stancliff Rd., Suite 210
Houston, Texas
Tel. +1 281 530 5656
Fax. +1 281 530 5657

CUSTODY SEAL
Date:
Name:
Company:

Seal Broken By:
Date:

ALS Environmental
10450 Stancliff Rd., Suite 210
Houston, Texas 77099
Tel. +1 281 530 5656
Fax. +1 281 530 5657

CUSTODY SEAL
Date:
Name:
Company:

Seal Broken By:
Date:

8 of 9
MPS# 7949 3869 9297
Mstr# 8062 9842 2850

FRI – 11 APR 10:30A
PRIORITY OVERNIGHT

AB SGRA

77099
TX-US IAH

8 of 9
MPS# 7949 3869 9312
Mstr# 8062 9842 2850

FRI – 11 APR 10:30A
PRIORITY OVERNIGHT

AB SGRA

77099
TX-US IAH

ALS Environmental
10450 Stancliff Rd., Suite 210
Houston, Texas 77099
Tel. +1 281 530 5656
Fax. +1 281 530 5887

CUSTODY SEAL
Date:
Name: MIW
Company:

Seal Broken By:
Date:

ALS Environmental
10450 Stancliff Rd., Suite 210
Houston, Texas 77099
Tel. +1 281 530 5656
Fax. +1 281 530 5887

CUSTODY SEAL
Date:
Name: MIW
Company:

Seal Broken By:
Date:

ALS Environmental
10450 Stancliff Rd., Suite 210
Houston, Texas 77099
Tel. +1 281 530 5656
Fax. +1 281 530 5887

CUSTODY SEAL
Date:
Name: MIW
Company:

Seal Broken By:
Date:

ALS Environmental
10450 Stancliff Rd., Suite 210
Houston, Texas 77099
Tel. +1 281 530 5656
Fax. +1 281 530 5887

CUSTODY SEAL
Date:
Name: MIW
Company:

5 of 9
MPS# 0691 7949 3869 9286
Mstr# 8052 9842 2850 0215

FRI – 11 APR 10:30A
PRIORITY OVERNIGHT

AB SGRA

77099
TX-US IAH

1 of 9
TRK# 0215 8052 9842 2850
MASTER

FRI – 11 APR 10:30A
PRIORITY OVERNIGHT

AB SGRA

77099
TX-US IAH

2 of 9
MPS# 0691 7949 3869 9253
Mstr# 8052 9842 2850 0215

FRI – 11 APR 10:30A
PRIORITY OVERNIGHT

AB SGRA

77099
TX-US IAH

ALS Environmental
10450 Stancliff Rd., Suite 210
Houston, Texas 77099
Tel. +1 281 530 5656
Fax. +1 281 530 5667

CUSTODY SEAL
Date:
Time:
Name: MTV
Company:

Seal Broken By:
Date:

ALS Environmental
10450 Stancliff Rd., Suite 210
Houston, Texas 77099
Tel. +1 281 530 5656
Fax. +1 281 530 5667

CUSTODY SEAL
Date:
Time:
Name: MW
Company:

Seal Broken By:
Date: