C2-018-700044

8.2

REMEDIAL INVESTIGATION REPORT

RECEIVED
NOV 06 2003
BUREAU OF
ENVIRONMENTAL REMEDIATION

ARKANSAS CITY, KANSAS

Prepared for
Westar Energy

FINAL

Prepared by

BLACK & VEATCH
Corporation

October 2003

RECEIVED
NOV 06 2003
BUREAU OF
ENVIRONMENTAL REMEDIATION

REMEDIAL INVESTIGATION REPORT

ARKANSAS CITY, KANSAS

Prepared for
Westar Energy

Prepared by

BLACK & VEATCH
Corporation

October 2003

TABLE OF CONTENTS
Remedial Investigation Report
Arkansas City MGP Site

		Page
1.0	Introduction	1-1
	1.1 Objectives	1-1
	1.2 Site Background	1-2
2.0	RI Field Activities	2-1
	2.1 Soil Investigation	2-1
	2.2 Ground Water Investigation	2-3
	2.2.1 Monitoring Well Installation	2-3
	2.2.2 Ground Water Sampling	2-4
	2.2.3 Aquifer Testing	2-5
	2.3 Surveying	2-5
	2.4 Investigation-Derived Waste	2-6
3.0	Site Geology and Hydrogeology	3-1
	3.1 Site Geology	3-1
	3.2 Site Hydrogeology	3-3
4.0	Analytical Results	4-1
	4.1 Field Observations and Measurements	4-1
	4.2 Soil Sample Analytical Results	4-3
	4.2.1 Organic Compounds in Soil Samples	4-3
	4.2.2 Inorganics in Soil Samples	4-5
	4.2.3 Hazardous Waste Characteristics	4-5
	4.3 Ground Water Sample Analytical Results	4-6
	4.3.1 Organic Compounds in Ground Water Samples	4-6
	4.3.2 Inorganics in Ground Water Samples	4-6
	4.4 Data Validation	4-7
5.0	Extent of Contamination	5-1
	5.1 Soil	5-1
	5.2 Ground Water	5-4
	5.3 Contaminant Fate and Transport	5-5
	5.3.1 Potential Migration Routes	5-5
	5.3.2 Contaminant Physical Characteristics and Migration Potential	5-6

TABLE OF CONTENTS (Continued)
Remedial Investigation Report
Arkansas City MGP Site

Page

6.0 Summary and Conclusions 6-1
6.1 Summary of Investigation 6-1
6.2 Conclusions 6-3
6.3 Recommendations for Future Actions 6-4

7.0 References 7-1

Tables

Page

Table 3-1 Ground Water Depths and Elevations 3-4
Table 3-2 Estimated Hydraulic Conductivities 3-5
Table 4-1 Summary of Visible Contamination in Soil Probes 4-2
Table 4-2 Summary of Samples per SDG 4-8
Table 5-1 PAHs Exceeding KDHE Tier 2 Risk-Based Levels in Soil 5-2
Table 5-2 Hazardous Waste Characteristics of Soil 5-4
Table 5-3 Physicochemical Properties of PAHs 5-7
Table 5-4 Physicochemical Properties of Inorganics 5-9

Figures

Following page

Figure 1-1 Site Map 1-2
Figure 2-1 Monitoring Well and Soil Probe Locations 2-1
Figure 3-1A Geologic Cross Section A-A' 3-1
Figure 3-1B Geologic Cross Section B-B' 3-1
Figure 3-1C Geologic Cross Section C-C' 3-1
Figure 3-2 Bedrock Surface Elevation Contours 3-3
Figure 3-3 Ground Water Contours 3-3
Figure 4-1A Concentrations of Organic Compounds in Soil 4-3
Figure 4-1B Concentrations of Organic Compounds in Soil 4-3
Figure 4-2 Concentrations of Pesticides and Inorganics in Soil 4-3
Figure 4-3 Concentrations of Organic Compounds and Inorganics in Ground Water 4-6

TABLE OF CONTENTS (Continued)
Remedial Investigation Report
Arkansas City MGP Site

Appendices

Appendix A Boring Logs and Monitoring Well Construction Logs
Appendix B Monitoring Well Development and Sampling Forms
Appendix C Slug Test Data
Appendix D Ground Water Calculations
Appendix E Soil Analytical Results
Appendix F Ground Water Analytical Results
Appendix G Data Validation Report

1.0 Introduction

This report was prepared to document the findings of the remedial investigation (RI) field activities conducted at the Westar Energy, Arkansas City former manufactured gas plant (MGP) site located west of the intersection of South First Street and Quincy Avenue in Arkansas City, Kansas. These findings provide the basis for proposals and recommendations regarding future actions related to managing the potential risk to human health and the environment posed by site contamination. The field activities were performed as outlined in the *Remedial Investigation Work Plan* for the site (B&V 2003). The work plan was prepared as required by Consent Order No.94-E-0172 with the Kansas Department of Health and Environment (KDHE) (KDHE 2002) and is consistent with the U.S. Environmental Protection Agency's (EPA's) Guidance for Conducting Remedial Investigations and Feasibility Studies under the Comprehensive Environmental Response, Compensation, and Liability Act (CERCLA) (EPA 1988), and the National Oil and Hazardous Substances Pollution Contingency Plan (NCP).

This report includes a discussion of the field activities and any deviations to the work plan (Section 2.0), a description of the site physical characteristics including the geology and hydrogeology (Section 3.0), a discussion of the physical and analytical results of the data collected during the RI field activities (Section 4.0), delineation of contamination relative to regulatory levels and discussion regarding contaminant fate and transport (Section 5.0), summary, conclusions, and recommendations (Section 6.0), and references cited throughout the report (Section 7.0).

1.1 Objectives

The objectives of the RI were to obtain data to fully evaluate the nature and extent of contamination at the site, to assess the potential risk to human health and the environment posed by the site, and to develop a database to support the evaluation of remedial alternatives. Specifically, the objectives of the RI were as follows:

- Identify and characterize all potential contaminant source areas at the site. This includes investigating the surface soil, subsurface soil, and ground water in and around the areas associated with former gas plant operations.

- Obtain additional information and data to assess the geological, hydrogeological, and hydrological conditions of the site.

- Compare contaminant levels in soil and ground water with KDHE risk-based compliance standards to determine the extent and magnitude of contamination.

- Evaluate the potential for migration of contaminants from the site. This includes characterizing the physiochemical properties of each potential contaminant, their mobility and persistence in the environment, and their fate and transport mechanism, as well as identifying human and environmental targets that may be affected by site contaminants.

- Collect data to support the evaluation and, if appropriate, the design of potential remedial actions. As necessary, perform bench or pilot scale treatability tests to support the development of potential remedial actions.

1.2 Site Background

The following paragraphs contain a brief discussion of background information related to the site, including a short history and current description of the site; a summary of the physical characteristics of the study area; and a discussion of previous investigations conducted at the site.

The site is located in south central Arkansas City in Cowley County, Kansas. The property occupies 1.43 acres in an area currently zoned for heavy industrial use, and is bounded by First Street to the east, railroad tracks and a canal to the west, and industrial properties to the north and south. The areas west and east of the MGP property are currently zoned as single family residential and general business districts, respectively, although both currently contain only residences. The properties to the north (Archer-Daniels Midland grain elevators) and south of the MGP site are zoned as a heavy industrial district.

The northern portion of the former MGP property is owned by the Unified School District (USD) 470 and is used for storage and operation and maintenance of equipment. A brick storage building and a concrete block vehicle garage are present on the northern property. The majority of that property is fenced and covered with grass and/or gravel. The southern portion of the property is owned by Tom Bay (Bay property) and houses two metal buildings, currently used for storage. This property is covered with grass and is partially surrounded with a fence. The site map is presented on Figure 1-1.

The Arkansas City Gas and Electric Light Company and the Arkansas Valley Gas, Oil and Improvement Company produced manufactured gas at the MGP site between 1890 and

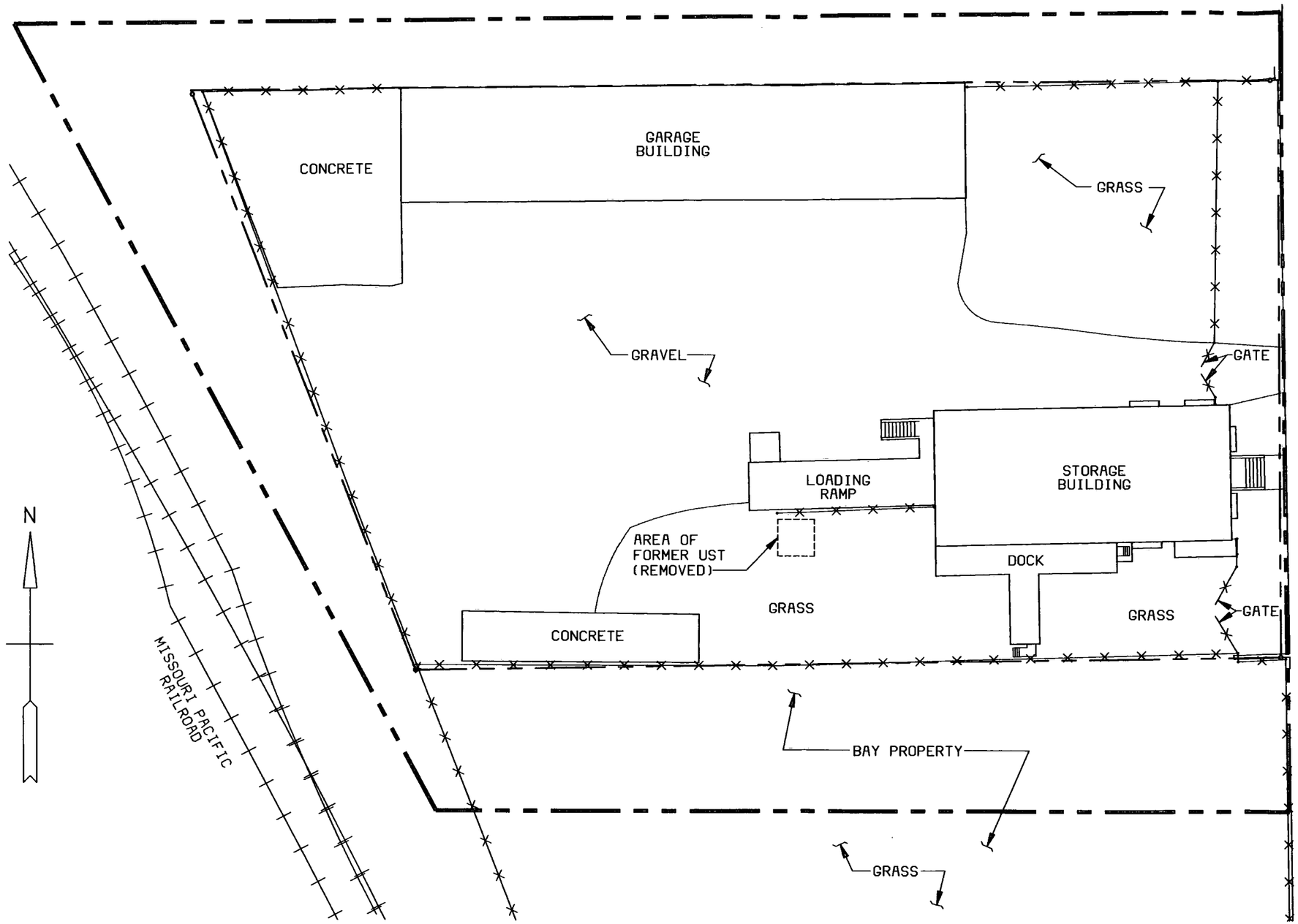

LEGEND:

- FORMER GAS PLANT PROPERTY BOUNDARY
- EXISTING STRUCTURE
- USD 470 PROPERTY BOUNDARY
- FENCE

NOTE:

1. FORMER STRUCTURES LOCATIONS ARE APPROXIMATE.

REFERENCE: SANBORN FIRE INSURANCE MAPS: 1890, 1899, 1905, 1912, AND 1920
OWNERSHIP/AERIAL MAP,
BOURBON COUNTY, KANSAS, 1988
SMITH & OAKES, INC ENGR: 2003

FIGURE 1-1
SITE MAP
ARKANSAS CITY MGP SITE
RI REPORT
65541-1000-GENUP-C-T000047D9

1905. Detailed information related to the volumes of gas produced, production processes, and other historical details are listed in the preliminary assessment report for the site (BVWST 1993). Historical information indicates that the plant consisted of an operations building housing the retorts, purifying room, lime room, and other support operations; a gas holder; and two small support buildings (coal shed/pipe shop and an electrical supply house). Sanborn fire insurance maps dated 1912 through 1947 show the gas plant building as being occupied by Beard's Foundry and Machine Works, and the gas holder no longer present after 1925. The 1947 Sanborn map indicates that the Kansas Gas and Electric Company constructed a supply and meter warehouse (current storage building) north of the foundry in 1947. That Sanborn map also shows a building labeled as an auto repair shop on the northwest portion of the property. None of the structures associated with the original gas plant are currently visible at the site, with the exception of a low stone wall along the south fence line of the USD 470 property that may be a footing for the former operations building.

A preliminary site assessment was completed in 1993 (BVWST 1993), the purpose of which was to determine the potential for the existence of MGP-related byproducts and residuals, the extent of those potential byproducts and residuals, and the potential degree of impact they would impart on human health and the environment. Information included in that report consisted of the following: a legal description of the property and ownership records; background information related to the gas manufacturing processes and production quantities; descriptions of site and regional physical information (geology and hydrology); a search of environmental databases to identify environmentally-sensitive sites within a one-mile radius of the property; and a discussion of potential exposure pathways and contaminants related to the MGP site.

Because of field observations during the RI field observations during the RI field activities that did not correlate with historical map information, a comparison between the former site structures shown on all of the available Sanborn fire insurance maps was completed while preparing this report. It was determined that the coal shed/pipe shop, gas holder, and electric supply house were located incorrectly on the preliminary site assessment and RI work plan figures. The dimensions of those the structures were correct; however, they were shown approximately 40 feet too far north based on their locations shown on the 1890, 1899, 1905, 1912, 1920, 1925, and 1934 Sanborn maps, rather than the locations shown only on the three earliest Sanborn maps, which were used to prepare the preliminary site assessment figures. The adjusted locations of the former structures, based on reviews of all

of the available Sanborn maps and field observations, have been adjusted on all of the figures in this report. The revised locations coincide with field observations of the stone wall along the south edge of the USD 470 property.

2.0 RI Field Activities

The RI field activities conducted at the Arkansas City MGP site were performed from July 7 through July 15, 2003. These activities included advancing 27 soil probes at the site; collecting soil samples for chemical analysis from selected probes; collecting 7 surface soil samples for chemical analysis; installing prepacked screen monitoring wells at 4 probe locations; developing, purging, and collecting ground water samples from the monitoring wells; collecting ground water levels from the wells; conducting slug tests on the monitoring wells; and surveying the probe and monitoring well locations and elevations. Probing services were provided by Below Ground Surface, Inc., of Lawrence, Kansas. Soil and ground water samples were hand-delivered to Pace Analytical Services, Inc., of Lenexa, Kansas, for chemical analysis. Surveying services were provided by Smith & Oakes, Inc., of Arkansas City, Kansas.

The fieldwork was completed as described in the RI work plan, and according to the procedures outlined in the *Quality Assurance Project Plan* (QAPP) and *Field Sampling Plan* (FSP), both of which were included as appendices to the work plan (B&V 2003). Any deviations to the work plan are described in the following subsections. The locations of the soil probes, monitoring wells, and former and existing site features are presented on Figure 2-1.

2.1 Soil Investigation

The probes for the subsurface soil sampling and installation of prepacked screen monitoring wells were pushed through fill and unconsolidated materials using 2-¼-inch outside diameter (OD) direct push samplers advanced by a track-mounted hydraulic probing rig. Each of the probes was stratigraphically logged to delineate the changes in subsurface units, and the soil cores were screened with a photoionization detector (PID) to detect volatile organic contamination. The logs for the probes are presented in Appendix A.

Selected probes were located within or adjacent to former structures; otherwise, the probes were located on a grid pattern with spacing of approximately 50 feet. The work plan indicated that the majority of the probes would be pushed to a depth of 15 feet below ground surface (bgs), 3 feet below visible contamination, or to refusal, whichever was

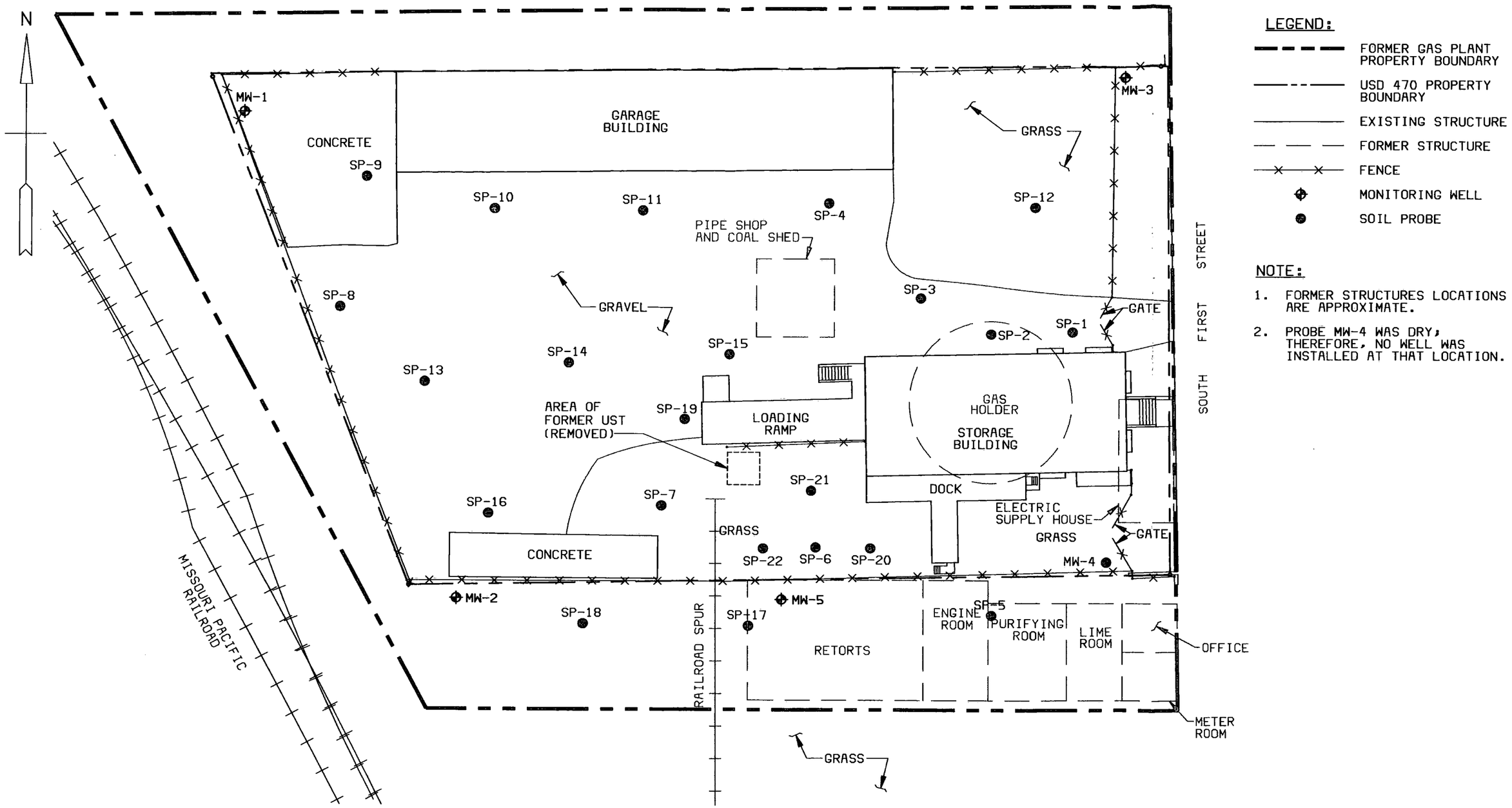

LEGEND:

- FORMER GAS PLANT PROPERTY BOUNDARY
- USD 470 PROPERTY BOUNDARY
- EXISTING STRUCTURE
- FORMER STRUCTURE
- FENCE
- MONITORING WELL
- SOIL PROBE

NOTE:

1. FORMER STRUCTURES LOCATIONS ARE APPROXIMATE.
2. PROBE MW-4 WAS DRY; THEREFORE, NO WELL WAS INSTALLED AT THAT LOCATION.

30' 20' 10' 0 30' 60'

1"=30'

REFERENCE: SANBORN FIRE INSURANCE MAPS: 1890, 1899, 1905, 1912, AND 1920
OWNERSHIP/AERIAL MAP,
BOURBON COUNTY, KANSAS, 1988
SMITH & OAKES, INC ENGR: 2003

FIGURE 2-1
MONITORING WELL AND SOIL PROBE LOCATIONS
ARKANSAS CITY MGP SITE
RI REPORT
65541-1000-GENUP-C-T000047MB

encountered first. The exceptions to this were the probes for the installation of the monitoring wells, which were to be pushed to 25 to 40 feet bgs, or to refusal. However, sampler refusal, mostly on limestone bedrock, was encountered in the first several probes at depths typically shallower than 15 feet bgs; therefore, all of the probes were pushed to refusal on bedrock regardless of total depth, with the exception of probe SP-12 which was pushed before the consistently shallow bedrock was noted. All of the probe holes (not including those in which a monitoring well was installed) were backfilled to the ground surface with bentonite chips following the logging and sampling activities.

Soil samples for chemical analysis were collected at each probe location with the exception of probes SP-19 through SP-22, which were added during the probing activities to confirm the depth to bedrock (SP-19) and to determine the extent of visible contamination observed in probe SP-6, as discussed later in this report. Where collected, samples were taken from shallow (0 to 5 feet bgs) and deep (5 to 10 feet bgs) intervals. The samples were collected from the area containing the greatest amount of visible contamination or highest PID readings, or from the midpoint of the sampling interval (2.5 and 7.5 feet bgs) if no visible contamination was present.

The majority of the soil samples were analyzed for benzene, toluene, ethylbenzene, and total xylenes (BTEXs) by SW-846 Method 8021, and for polynuclear aromatic hydrocarbons (PAHs) by SW-846 Method 8310 because these compounds are typically associated with byproducts and residuals resulting from former MGP processes. However, soil samples from probes MW-1, MW-3, and SP-9 were analyzed for volatile organic carbons (VOCs) by SW-846 Method 8260, and semivolatile organic carbons (SVOCs) by SW-846 Method 8270 because of these probes' locations relative to the grain elevators to the north, and because it was anticipated that the broader range analyses (versus BTEXs and PAHs only) would detect a greater range of compounds that may be related to the grain elevators. Samples for analysis of selected Resource Conservation and Recovery Act (RCRA) metals including arsenic, barium, cadmium, chromium, lead, mercury, selenium, and silver by SW-846 Method 6010B were collected from probes MW-1, MW-2, MW-3, MW-4, SP-5, SP-11, and SP-13. The soil samples for analysis of selected RCRA metals were intended to locate areas with residuals containing heavy metals that may be related to former MGP or foundry operations, and to provide generalized data for metals across the site. In addition, soil samples for analysis of total cyanide by EPA Method 335.3 were collected from probes MW-1, MW-2,

MW-3, MW-4, SP-5, and SP-7. Cyanide can be associated with residuals from the gas purifying process. Soil samples for analysis of pesticides by SW-846 Method 8081 were collected from probes SP-9, MW-1, and MW-3 because of these probes' location relative to the grain elevators, and because those types of compounds are typically associated with agricultural structures or processes. Field duplicates were collected from the shallow intervals of probes SP-7 and SP-17 for the same analyses as those listed for the primary soil samples at those respective locations.

Two soil samples from probe SP-6 were also submitted for hazardous waste characteristics because tar was encountered at that location during the probing and sampling activities. Hazardous waste characteristics included analyses for corrosivity, ignitability, and reactivity by SW-846 Methods 9040/9045, 1010, and 9010/9030, respectively.

The collection of surface soils at probing locations MW-1, MW-2, MW-3, MW-4, SP-7, SP-8, SP-10, and SP-16 was proposed in the work plan. However, a surface soil sample was not collected at the location of probe MW-1 because that area was covered with concrete. It was an oversight that a surface soil sample was not collected from the probe for well MW-2. The surface soil samples were submitted for analysis of PAHs by SW-846 Method 8310.

2.2 Ground Water Investigation

The ground water investigation conducted at the site included installing and sampling four monitoring wells, conducting aquifer tests on the wells, and collecting ground water elevations to determine ground water flow directions. The procedures and rationale for this investigation, as well as any deviations to the work plan, are discussed in the following subsections.

2.2.1 Monitoring Well Installation

Prepacked screen monitoring wells were installed in probes MW-1, MW-2, MW-3, and MW-5. The probe for well MW-4 encountered refusal on bedrock at 16.5 feet bgs, and the probe hole was dry during logging and approximately one hour after standing open; therefore, no monitoring well was installed in that probe and the hole was backfilled to the ground surface with bentonite chips according to the procedures followed for the other soil probes. Monitoring well MW-5 was added during the field activities to provide

an additional ground water monitoring point in the area anticipated to be downgradient of probe SP-6, which contained MGP-related contamination as discussed in Section 4.0. Each of the monitoring wells was to be installed to a depth of 25 feet and include 15 feet of screened interval. However, wells MW-1, MW-2, and MW-5 could only be installed to approximately 15.5 feet bgs and included only 10 feet of screen because of refusal on shallow bedrock at those locations. Monitoring well MW-3 was installed as proposed in the work plan.

The probe hole for each monitoring well was widened to 3.5 inches in diameter before the wells were installed at each location to meet KDHE well regulations. One-inch OD, Schedule 40, National Sanitation Foundation (NSF) certified polyvinyl chloride (PVC) riser pipe was used for the well casing material. The well screens were constructed of prepacked factory-slotted PVC pipe with 0.01-inch wide slots surrounded by washed silica contained in a wire mesh. The screened interval of each well included the appropriate number of 5-foot prepacked screens. Additional filter pack sand was placed around the prepacked screen interval to a height of 1 to 2 feet above the top of the screen. A bentonite seal was placed above the filter pack and the remaining annular space was filled to one foot bgs with bentonite chips, which were then hydrated with potable water. The wells were completed with cast iron locking flush mounted enclosures set in concrete. The monitoring well construction logs are included in Appendix A.

A peristaltic pump and new disposable polyethylene tubing were used to develop, purge, and sample the newly installed monitoring wells, according to the procedures outlined in the QAPP. Development volumes for wells MW-2, MW-3, and MW-5 ranged from 4.3 to 8.5 liters. Monitoring well MW-1 was pumped dry twice, with a total of approximately 1 liter removed during the development activities. Ground water quality parameters including pH, temperature, specific conductivity, oxidation reduction potential (ORP), dissolved oxygen (DO), and turbidity were collected during the development and purging activities. The volume of water removed from each of the wells, the rate of removal, and ground water quality parameters recorded during the development activities are documented on the monitoring well development data sheets presented in Appendix B.

2.2.2 Ground Water Sampling

Ground water samples were collected from the four monitoring wells following purging activities, similar in procedure to those conducted during the well development activities.

Monitoring well MW-1 was purged dry at 1.1 liters before sampling. Purge volumes in the other three monitoring wells ranged from 3.2 liters in well MW-2 to 5 liters in well MW-3. Ground water quality parameters were collected from each well during the purging activities. The volume of water removed from each of the wells, the rate of removal, and ground water quality parameters recorded during the purging activities are documented on the monitoring well field sampling data sheets presented in Appendix B.

The ground water samples were submitted for analysis of VOCs by SW-846 Method 8260, SVOCs by SW-846 Method 8270, selected RCRA metals by SW-846 Method 6010B, and total cyanide by EPA Method 335.3. In addition, ground water samples from wells MW-1 and MW-3 were submitted for analysis of pesticides by SW-846 Method 8081. A field duplicate sample was collected from well MW-5. Additional sample volumes for internal laboratory quality control (matrix spike/matrix spike duplicate samples) were collected from well MW-3.

2.2.3 Aquifer Testing

Slug tests were performed on the newly installed prepacked screen monitoring wells to estimate the hydraulic conductivity of the portion of the water bearing unit adjacent to the screened portion of each well. These data estimate the maximum ground migration rate of soluble contaminants in ground water. Falling head slug tests were conducted on the wells by filling the casing with distilled water, and the water column height in each well was recorded as the distilled water dispersed into the surrounding formation and the water level fell within the well casing. Data were collected on a Mini-Troll datalogger with Win-Situ 2000 Instrument Control Package, Version 3.69. Starpoint Super Slug 2.2 Software was used to analyze the slug test data. The results of the slug tests are presented in Appendix C.

2.3 Surveying

Smith & Oakes, Inc., surveyed the newly installed monitoring wells, soil probe locations, and other site features including existing buildings, property corners, fences, utility locations, and other visible site features. Coordinate locations and ground surface elevations were collected for each of these points, and top of casing (TOC) elevations were measured for the wells.

2.4 Investigation-Derived Wastes

Investigation-derived wastes including soil cuttings from the probes and water from the decontamination, well development, and well purging activities were generated during the RI field activities. Solid and liquid wastes were collected in separate new, lined 55-gallon drums and staged on pallets at the site. A composite soil sample was collected from the drum of soil cuttings and submitted for analysis of VOCs, SVOCs, selected RCRA metals, pesticides, and total cyanide according to the methods listed previously. A composite water sample was collected from the drum of decontamination/purge/ development water and submitted for the following analyses requested by the City of Arkansas City: VOCs, SVOCs/phenols, selected RCRA metals, total cyanide, and pesticides by the previously listed methods, and for chemical oxygen demand by EPA Method 410.4, biochemical oxygen demand by EPA Method 405.1, total suspended solids by EPA Method 160.2, pH by EPA Method 150.1, and oil and grease by EPA Method 1664. It is anticipated that the soil cuttings will be disposed of at an appropriate local landfill and that the water will be pumped to a nearby sanitary sewer manhole at a future time following the review and acceptance of the analytical data by the respective agencies.

3.0 Site Geology and Hydrogeology

The information regarding site geology and hydrogeology obtained during the July 2003 RI field activities was used to supplement general background data presented in the preliminary site assessment, and is discussed in the following subsections. The regional geology and hydrogeology are discussed in greater detail in the preliminary site assessment (B&V 2003).

3.1 Site Geology

Data gathered during the RI indicates that the geology across the site from the surface downward includes fill, alluvium, and limestone bedrock. Fill and alluvium were encountered at all of the probing locations. Limestone bedrock or sampler refusal at depths consistent with the depth to bedrock at adjacent probe locations was also encountered in each of the probes, with the exception of probe SP-12 which was not advanced to refusal. Cross sections presenting the geologic interpretation are presented on Figures 3-1A, 3-1B, and 3-1C.

The fill unit consists of cohesive and granular materials generally less than 4 feet in thickness; however, the fill materials encountered in probe SP-6 extended to 13 feet bgs. Cohesive fill materials were typically present in the southern and western portions of the site and consisted of silt that was brown to dark brown, non-plastic, dry to moist, and contained varying amounts of sand, gravel, cinders, slag, and/or brick. The granular fill materials were present more often in the northern and eastern portions of the site, and consist of sand, silty sand, gravelly sand, or gravel that ranges from tan to brown to gray in color, is well to poorly graded, fine to coarse grained, dry to moist, subangular to angular, and contains traces of silt, clay, gravel, brick, cinders, and/or slag. In addition, slag and cinders were the major constituents of portions of the fill materials present in probes SP-6 and SP-18. The thickness of the granular fill unit was difficult to measure because of poor sample recovery during probing.

The log of probe SP-6 and cross section C-C' (Figure 3-1C) indicate that fill materials were encountered at that location to a depth of 13.2 feet bgs; however, fill materials only extended to an average depth of 5 feet bgs in the surrounding probes. In addition, the bottom 5 feet of fill materials in probe SP-6 consisted entirely of slag with some cinders, which were not present in the surrounding probes. The depth of fill containing slag and cinders in probe SP-6 suggest that the cavity may have been man-made for the disposal

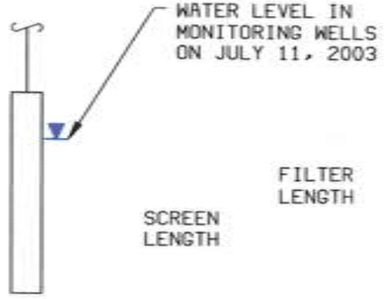

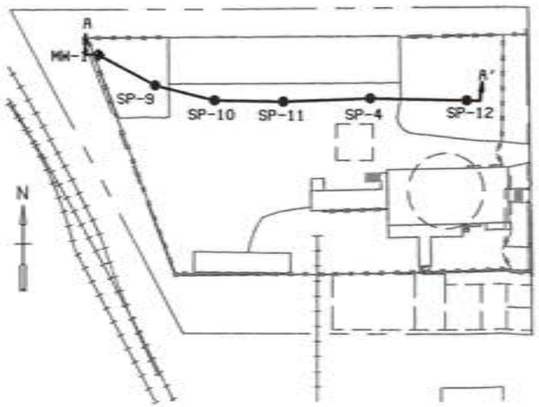

GEOLOGIC CROSS SECTION LOCATION KEY

LEGEND

- SILTY SAND
- GRAVEL
- SAND
- SANDY GRAVEL
- SILT
- CLAY
- LIMESTONE
- CONCRETE
- SS1 SURFACE SOIL SAMPLE
- S01 SHALLOW (0-5' INTERVAL) SOIL SAMPLE
- S02 DEEP (5-10' INTERVAL) SOIL SAMPLE

20' 10' 0 20' 40'

1"=20'

NOTES:

1. PID READINGS LESS THEN 1 PPM ARE NOT SHOWN.
2. PPM - PARTS PER MILLION.
3. SOIL SAMPLING DEPTHS ARE PRESENTED AS FEET BELOW GROUND SURFACE.

FIGURE 3-1A
GEOLOGIC CROSS SECTION A-A'
ARKANSAS CITY MGP SITE
RI REPORT
65541-2010-516-C-T000048NY

B
SOUTHWEST

B'
NORTHEAST

MW-2 SP-16 SP-7 SP-19 SP-15 SP-3 SP-12 MW-3

FILL

GRANULAR ALLUVIUM

COHESIVE ALLUVIUM

LIMESTONE

50 PPM (12.5')
864 PPM (13.0')
1,534 PPM (13.7')
GRADES DARK GRAY W/ SLIGHT FUEL ODOR (13.4')

GRADES DARK GRAY W/ SLIGHT FUEL ODOR (14.5')

SLIGHT GASOLINE ODOR (10.1')

GRADES GRAY W/ SLIGHT GASOLINE ODOR (10.8')

250 PPM (13.3')

10 PPM (12.8')
GRADES DARK GRAY W/ HEAVY GASOLINE ODOR (13.0')

GRADES REDDISH TAN (16.0')

40 PPM (17.0')

GASOLINE ODOR GRADES OUT (17.4')

5.8 PPM (9.5')

2.4 PPM (12.5')

GRADES GRAY W/ SLIGHT GASOLINE ODOR

ELEVATION IN FEET (MSL)

1085 1080 1075 1070 1065 1060 1055 1050

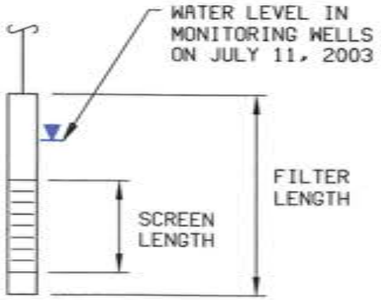

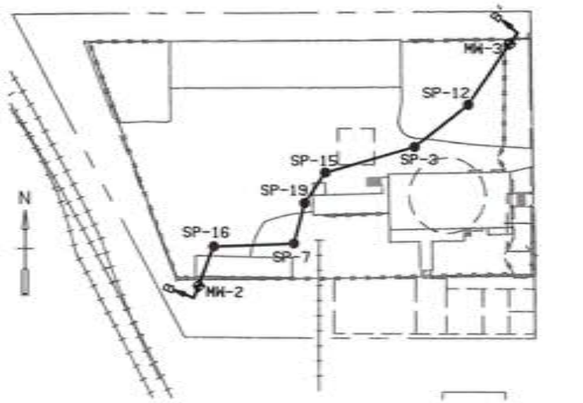

GEOLOGIC CROSS SECTION LOCATION KEY

LEGEND

- SILTY SAND
- SILT
- SAND
- LIMESTONE
- GRAVELLY SAND
- GRAVEL
- SAND/SILTY SAND
- SANDY GRAVEL
- SS1 SURFACE SOIL SAMPLE
- SO1 SHALLOW (0-5' INTERVAL) SOIL SAMPLE
- SO2 DEEP (5-10' INTERVAL) SOIL SAMPLE

NOTES:

1. PID READINGS LESS THEN 1 PPM ARE NOT SHOWN.
2. PPM - PARTS PER MILLION.
3. SOIL SAMPLING DEPTHS ARE PRESENTED AS FEET BELOW GROUND SURFACE.

20' 10' 0 20' 40'
1"=20'

FIGURE 3-1B
GEOLOGIC CROSS SECTION B-B'
ARKANSAS CITY MGP SITE
RI REPORT
65541-2010-516-C-T00004BNZ

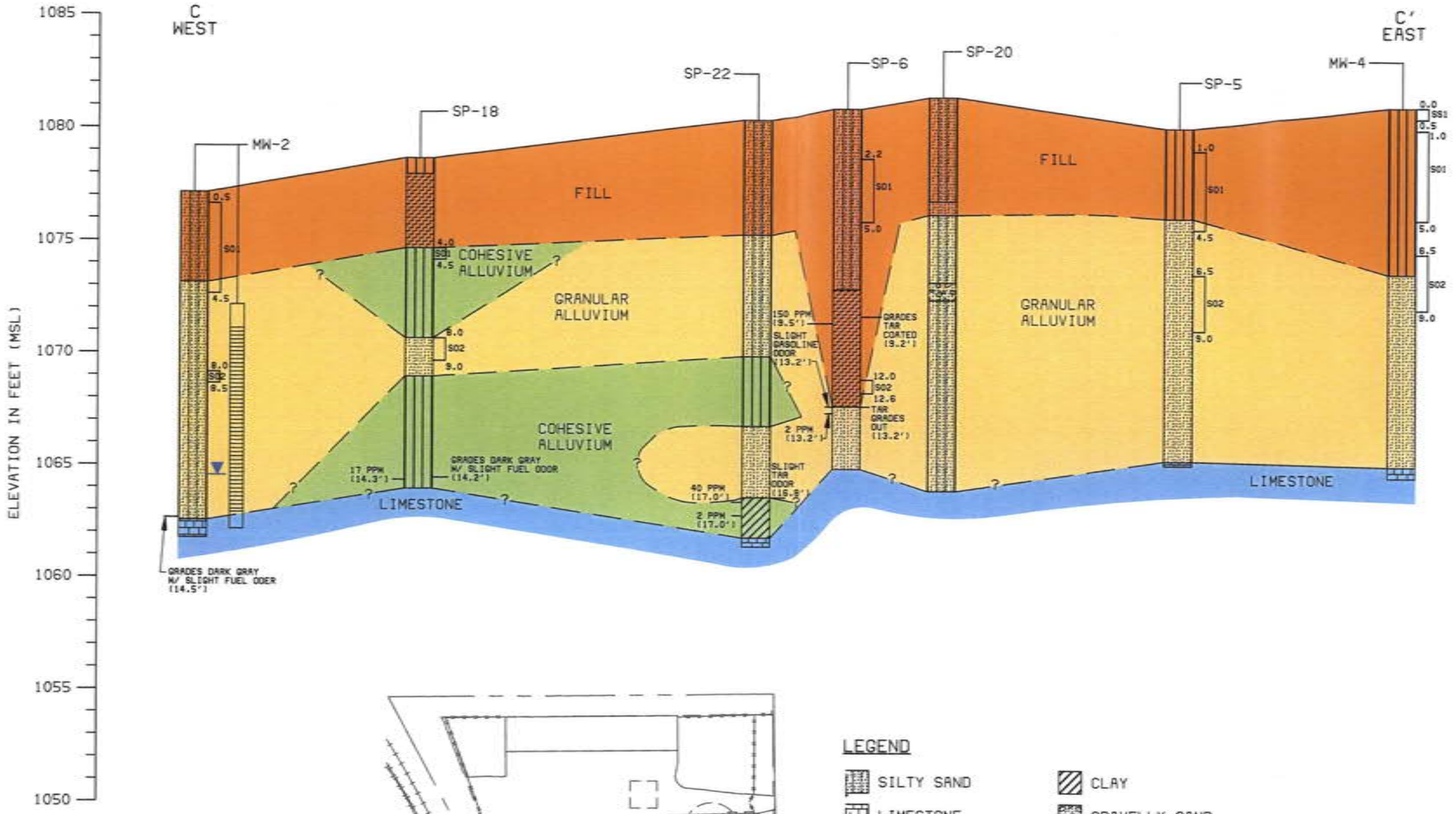

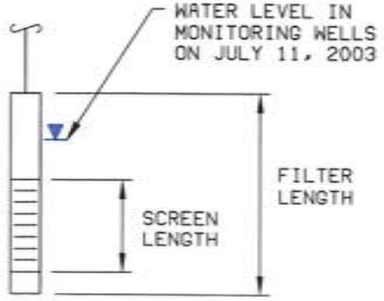

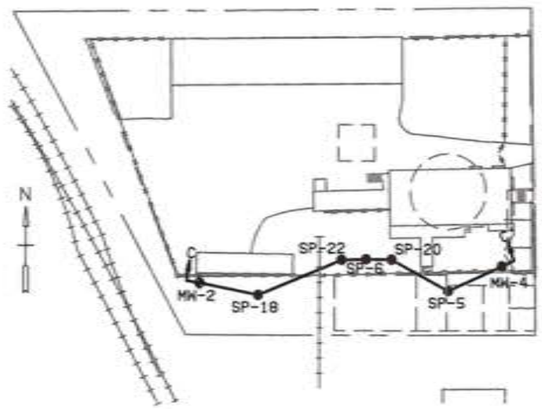

GEOLOGIC CROSS SECTION LOCATION KEY

LEGEND

- SILTY SAND
- LIMESTONE
- SILT
- SLAG AND CINDERS
- SAND
- CLAY
- GRAVELLY SAND
- SS1 SURFACE SOIL SAMPLE
- S01 SHALLOW (0-5' INTERVAL) SOIL SAMPLE
- S02 DEEP (5-10' INTERVAL) SOIL SAMPLE

20' 10' 0 20' 40'

1"=20'

NOTES:

1. PID READINGS LESS THEN 1 PPM ARE NOT SHOWN.
2. PPM - PARTS PER MILLION.
3. SOIL SAMPLING DEPTHS ARE PRESENTED AS FEET BELOW GROUND SURFACE.

FIGURE 3-1C
GEOLOGIC CROSS SECTION C-C'
ARKANSAS CITY MGP SITE
RI REPORT
65541-2010-516-C-T00004BP0

of by-products from the gas manufacturing process or former foundry operations; not a natural depression of native subsurface materials. Slag and cinders were also encountered in probes SP-5, MW-5, SP-17, SP-18, and MW-2, which were all located in the area of or west of the former retorts and former operations building/foundry. These fill materials are also likely associated with former gas plant or foundry operations.

The ground surface of the USD 470 property slopes slightly to the west-southwest, as shown on the three cross sections and according to the ground surface elevations listed on the probe logs in Appendix A. A slight depression in the ground surface was noted during the 1992 site visit (BVWST 1993) in an area approximately 65 feet west of the southwest corner of the storage building. However, USD 470 personnel have routinely placed granular fill materials in this area over the last several years and no depression was readily visible at the ground surface during the RI field activities. Fill materials were present to a depth of approximately 4 feet bgs in probe SP-7, which was advanced in the area where the surface depression had previously been encountered based on measurements taken during the 1993 site visit conducted as part of the preliminary site assessment.

Like the fill unit, the alluvium consists of cohesive and granular materials. The cohesive alluvium is present either suspended within the granular alluvium or overlying bedrock, and occurs primarily in the western and southern portions of the site. It consists of silt, sandy silt, or clay, ranges from brown to tan to gray in color, non plastic to low plasticity, dry to wet, and contained trace amounts of clay or fine sand. Thinly bedded clay, sand, and/or gravel lenses were sometimes present in this unit at depths ranging from 10.2 to 20.5 feet bgs.

Granular alluvial materials were present at all of the probing locations and consisted of sand, silty sand, or gravelly sand that is typically brown to tan at depths shallower than 10 feet bgs and sometimes grades to gray and saturated at depths greater than 10 feet bgs or when overlying bedrock. The granular alluvium is generally poorly sorted, fine grained, subangular, and moist to wet; although the materials tend to become well graded and fine to coarse grained with some rounded gravel at depths greater than 10 feet bgs. Clay and/or silt lenses and traces of bedding were occasionally present in the granular alluvium at depths ranging from 9.6 to 21.3 feet bgs. The presence of bedding and sequence of granular materials which increase in grain size with depth (fining upwards) are typical of alluvial depositional environments.

Limestone bedrock was encountered in 20 probes, and limestone chips were present in the shoe of the sampler following refusal at 4 locations. The bedrock ranged from tan to reddish-brown to dark gray in color, and was typically wet. The physical condition and strength of the limestone varied greatly from fresh to extremely weathered with a high instance of fractures. At locations where the bedrock was extremely weathered, residual limestone (clay consistency) and/or limestone chips were often present at the alluvium/bedrock interface. The limestone bedrock encountered at the site is anticipated to belong to the Nolans Limestone, Herrington Member based on its elevation and physical characteristics (Bayne 1962).

The depth to the bedrock surface (or sampler refusal) varied across the site. Contours of the elevation of the bedrock surface are presented on Figure 3-2. This surface is irregular across the site, with the exception being in the area of the storage building and the southeast corner of the former MGP property where the bedrock is relatively flat. Otherwise, the bedrock contains a depression and a general dip to the southwest and to the northeast. The bedrock depression occurs between the loading ramp and the garage building. The bedrock in this area appears to slope up to the northeast and to the southwest, and then slope back down in those two respective directions. Another low spot in the bedrock occurs in the area southwest of the storage building near the location of probe SP-22. These low spots in the bedrock are filled with cohesive or granular alluvium, which is consistent with the depositional environment based on the site's location relative to the Arkansas and Walnut Rivers.

3.2 Site Hydrogeology

Each of the newly installed monitoring wells is screened in alluvial materials above the alluvium/bedrock interface. The depth to ground water in the wells ranged from approximately 11 to 18 feet bgs on July 11, 2003. The depth to ground water at each well relative to the top of casing (TOC) and the corresponding ground water elevations are presented in Table 3-1. Figure 3-3 shows the ground water elevation contours and the estimated flow direction across the site. The contours indicate that ground water flow in the alluvium is to the northeast, which is the same direction that the bedrock slopes. However, this flow direction is opposite that of the slope of the ground surface, which is to the west-southwest toward the canal.

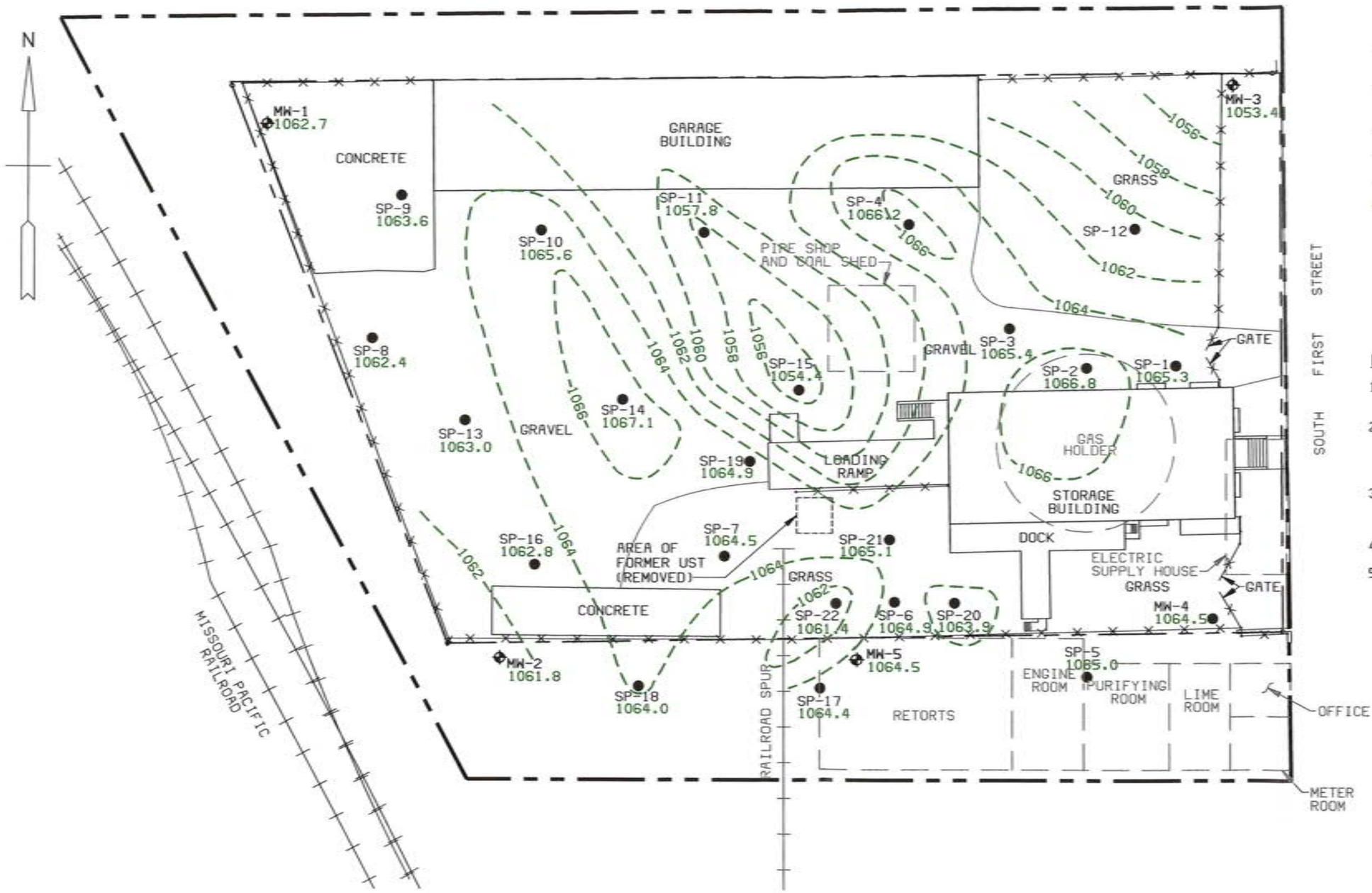

LEGEND:

- FORMER GAS PLANT PROPERTY BOUNDARY
- USD 470 PROPERTY BOUNDARY
- EXISTING STRUCTURE
- FORMER STRUCTURE
- FENCE
- BEDROCK CONTOUR
- 1056 BEDROCK ELEVATION
- MONITORING WELL
- SOIL PROBE

NOTE:

1. FORMER STRUCTURE LOCATIONS ARE APPROXIMATE.
2. DEPTHS LISTED ARE THOSE WHERE PROBE SAMPLER REFUSAL WAS ENCOUNTERED ON COMPETENT BEDROCK.
3. REFUSAL WAS NOT ENCOUNTERED IN PROBE SP-12 (BOTTOM OF PROBE AT 16 FEET).
4. CONTOUR INTERVAL IS 2 FEET.
5. ELEVATIONS ARE PRESENTED AS FEET ABOVE MEAN SEA LEVEL.

REFERENCE: SANBORN FIRE INSURANCE MAPS: 1890, 1899, 1905, 1912, AND 1920
OWNERSHIP/AERIAL MAP, BOURBON COUNTY, KANSAS, 1988
SMITH & OAKES, INC ENGR: 2003

FIGURE 3-2
BEDROCK SURFACE ELEVATION CONTOURS
ARKANSAS CITY MGP SITE
RI REPORT
65541-2010-516-C-T000048P6

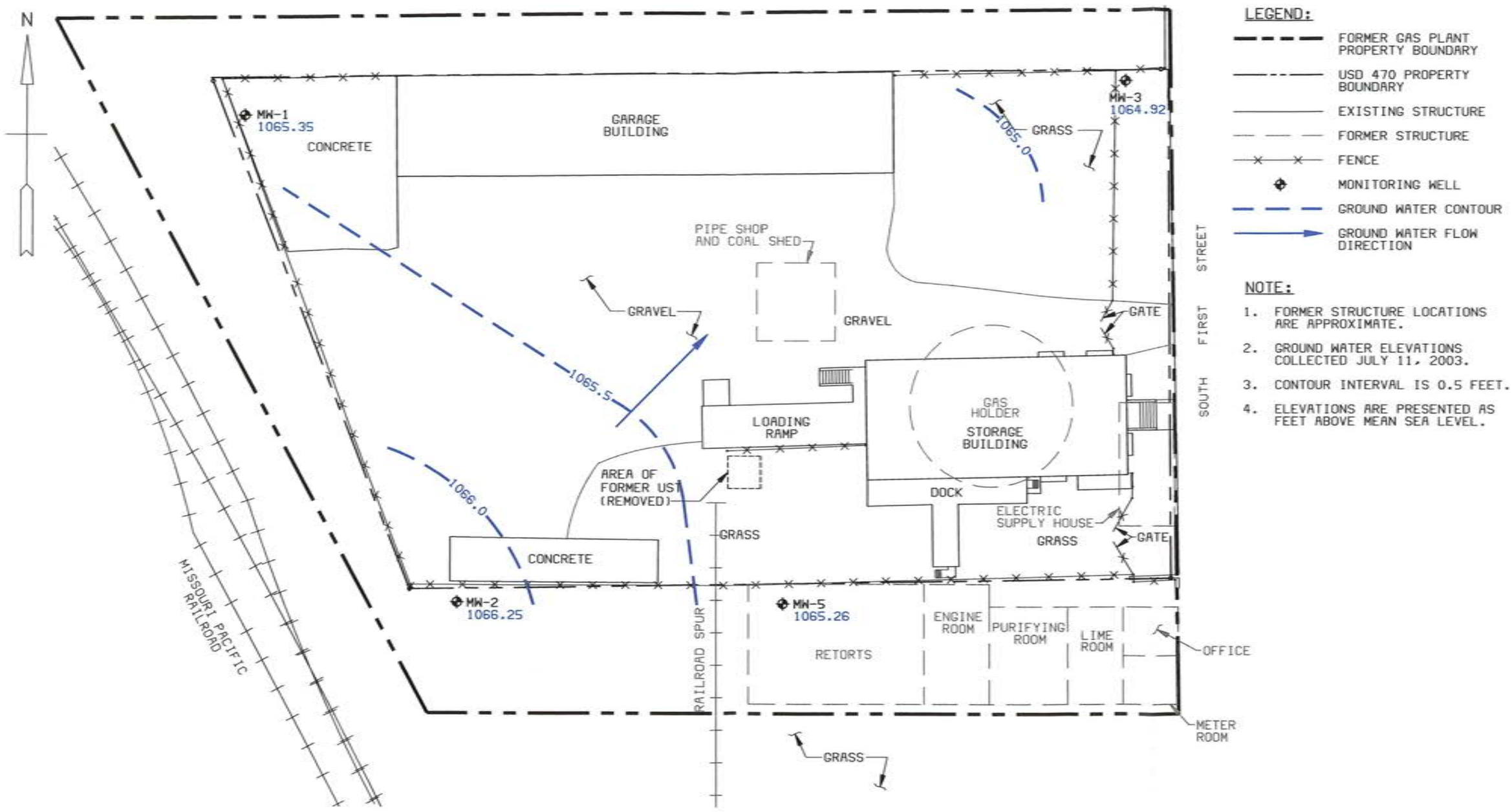

REFERENCE: SANBORN FIRE INSURANCE MAPS: 1890, 1899, 1905, 1912, OWNERSHIP/AERIAL MAP, BOURBON COUNTY, KANSAS, 1988 SMITH & OAKES, INC ENGR: 2003

FIGURE 3-3
GROUND WATER CONTOURS
ARKANSAS CITY MGP SITE
RI REPORT
65541-1000-GENUP-C-T000048SM

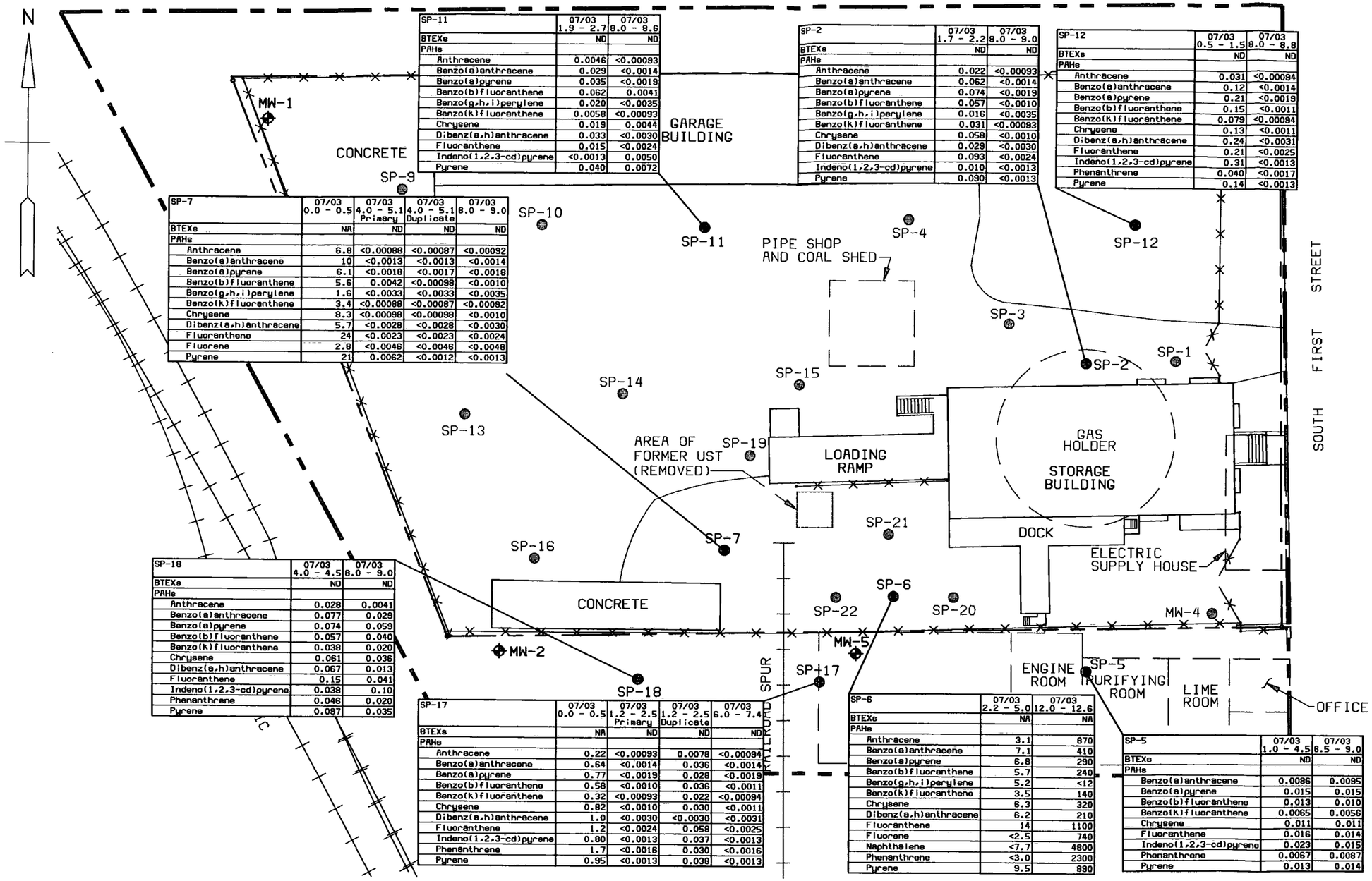

SP-11	07/03 1.9 - 2.7	07/03 8.0 - 8.6
BTEXs	ND	ND
PAHs		
Anthracene	0.0046	<0.00093
Benzo(a)anthracene	0.029	<0.0014
Benzo(a)pyrene	0.035	<0.0019
Benzo(b)fluoranthene	0.062	0.0041
Benzo(g,h,i)perylene	0.020	<0.0035
Benzo(k)fluoranthene	0.0058	<0.00093
Chrysene	0.019	0.0044
Dibenz(a,h)anthracene	0.033	<0.0030
Fluoranthene	0.015	<0.0024
Indeno(1,2,3-cd)pyrene	<0.0013	0.0050
Pyrene	0.040	0.0072

SP-2	07/03 1.7 - 2.2	07/03 8.0 - 9.0
BTEXs	ND	ND
PAHs		
Anthracene	0.022	<0.00093
Benzo(a)anthracene	0.062	<0.0014
Benzo(a)pyrene	0.074	<0.0019
Benzo(b)fluoranthene	0.057	<0.0010
Benzo(g,h,i)perylene	0.016	<0.0035
Benzo(k)fluoranthene	0.031	<0.00093
Chrysene	0.058	<0.0010
Dibenz(a,h)anthracene	0.029	<0.0030
Fluoranthene	0.093	<0.0024
Indeno(1,2,3-cd)pyrene	0.010	<0.0013
Pyrene	0.090	<0.0013

SP-12	07/03 0.5 - 1.5	07/03 8.0 - 8.8
BTEXs	ND	ND
PAHs		
Anthracene	0.031	<0.00094
Benzo(a)anthracene	0.12	<0.0014
Benzo(a)pyrene	0.21	<0.0019
Benzo(b)fluoranthene	0.15	<0.0011
Benzo(k)fluoranthene	0.079	<0.00094
Chrysene	0.13	<0.0011
Dibenz(a,h)anthracene	0.24	<0.0031
Fluoranthene	0.21	<0.0025
Indeno(1,2,3-cd)pyrene	0.31	<0.0013
Phenanthrene	0.040	<0.0017
Pyrene	0.14	<0.0013

SP-7	07/03 0.0 - 0.5	07/03 4.0 - 5.1 Primary	07/03 4.0 - 5.1 Duplicate	07/03 8.0 - 9.0
BTEXs	NA	ND	ND	ND
PAHs				
Anthracene	6.8	<0.00088	<0.00087	<0.00092
Benzo(a)anthracene	10	<0.0013	<0.0013	<0.0014
Benzo(a)pyrene	6.1	<0.0018	<0.0017	<0.0018
Benzo(b)fluoranthene	5.6	0.0042	<0.00098	<0.0010
Benzo(g,h,i)perylene	1.6	<0.0033	<0.0033	<0.0035
Benzo(k)fluoranthene	3.4	<0.00088	<0.00087	<0.00092
Chrysene	8.3	<0.00098	<0.00098	<0.0010
Dibenz(a,h)anthracene	5.7	<0.0028	<0.0028	<0.0030
Fluoranthene	24	<0.0023	<0.0023	<0.0024
Fluorene	2.8	<0.0046	<0.0046	<0.0048
Pyrene	21	0.0062	<0.0012	<0.0013

SP-18	07/03 4.0 - 4.5	07/03 8.0 - 9.0
BTEXs	ND	ND
PAHs		
Anthracene	0.028	0.0041
Benzo(a)anthracene	0.077	0.029
Benzo(a)pyrene	0.074	0.059
Benzo(b)fluoranthene	0.057	0.040
Benzo(k)fluoranthene	0.038	0.020
Chrysene	0.061	0.036
Dibenz(a,h)anthracene	0.067	0.013
Fluoranthene	0.15	0.041
Indeno(1,2,3-cd)pyrene	0.038	0.10
Phenanthrene	0.046	0.020
Pyrene	0.097	0.035

SP-17	07/03 0.0 - 0.5	07/03 1.2 - 2.5 Primary	07/03 1.2 - 2.5 Duplicate	07/03 6.0 - 7.4
BTEXs	NA	ND	ND	ND
PAHs				
Anthracene	0.22	<0.00093	0.0078	<0.00094
Benzo(a)anthracene	0.64	<0.0014	0.036	<0.0014
Benzo(a)pyrene	0.77	<0.0019	0.028	<0.0019
Benzo(b)fluoranthene	0.58	<0.0010	0.036	<0.0011
Benzo(k)fluoranthene	0.32	<0.00093	0.022	<0.00094
Chrysene	0.82	<0.0010	0.030	<0.0011
Dibenz(a,h)anthracene	1.0	<0.0030	<0.0030	<0.0031
Fluoranthene	1.2	<0.0024	0.058	<0.0025
Indeno(1,2,3-cd)pyrene	0.80	<0.0013	0.037	<0.0013
Phenanthrene	1.7	<0.0016	0.030	<0.0016
Pyrene	0.95	<0.0013	0.038	<0.0013

SP-6	07/03 2.2 - 5.0	07/03 12.0 - 12.6
BTEXs	NA	NA
PAHs		
Anthracene	3.1	870
Benzo(a)anthracene	7.1	410
Benzo(a)pyrene	6.8	290
Benzo(b)fluoranthene	5.7	240
Benzo(g,h,i)perylene	5.2	<12
Benzo(k)fluoranthene	3.5	140
Chrysene	6.3	320
Dibenz(a,h)anthracene	6.2	210
Fluoranthene	14	1100
Fluorene	<2.5	740
Naphthalene	<7.7	4800
Phenanthrene	<3.0	2300
Pyrene	9.5	890

SP-5	07/03 1.0 - 4.5	07/03 6.5 - 9.0
BTEXs	ND	ND
PAHs		
Benzo(a)anthracene	0.0086	0.0095
Benzo(a)pyrene	0.015	0.015
Benzo(b)fluoranthene	0.013	0.010
Benzo(k)fluoranthene	0.0065	0.0056
Chrysene	0.011	0.011
Fluoranthene	0.016	0.014
Indeno(1,2,3-cd)pyrene	0.023	0.015
Phenanthrene	0.0067	0.0087
Pyrene	0.013	0.014

LEGEND:

- FORMER GAS PLANT PROPERTY BOUNDARY
- USD 470 PROPERTY BOUNDARY
- EXISTING STRUCTURE
- FORMER STRUCTURE
- FENCE
- MONITORING WELL
- SOIL PROBE

NOTES:

1. FORMER STRUCTURES LOCATIONS ARE APPROXIMATE.
2. CONCENTRATIONS ARE PRESENTED AS mg/kg.
3. COMPOUNDS NOT LISTED WERE NOT DETECTED ABOVE THEIR RESPECTIVE DETECTION LIMITS.
4. ND - NOT DETECTED
5. NA - NOT ANALYZED

30' 20' 10' 0 30' 60'

1"=30'

REFERENCE: SANBORN FIRE INSURANCE MAPS: 1890, 1899, 1905, 1912, AND 1920
OWNERSHIP/AERIAL MAP, BOURBON COUNTY, KANSAS, 1988
SMITH & OAKES, INC ENGR: 2003

FIGURE 4-1B
CONCENTRATIONS OF ORGANIC COMPOUNDS IN SOIL
ARKANSAS CITY MGP SITE
RI REPORT
65541-2010-516-C-T00004G96

TABLE 3-1
GROUND WATER DEPTHS AND ELEVATIONS
Remedial Investigation Report
Arkansas City MGP Site

Monitoring Well	Top of Casing Elevation (feet above msl)	July 2003 Depth to Ground Water (feet below TOC)	July 2003 Ground Water Elevation (feet above msl)
MW-1	1,077.35	12.00	1,065.35
MW-2	1,076.90	10.65	1,066.25
MW-3	1,082.83	17.91	1,064.92
MW-5	1,079.57	14.31	1,065.26

Abbreviations:
msl Mean sea level
TOC Top of casing

In addition to the ground water present in the alluvium at the site, the fill materials encountered in probe SP-6 were saturated from approximately 8 to 13.2 feet bgs, where alluvial sand was encountered. The saturated zone of fill was comprised of coarse grained slag with cinders, and graded coal tar coated at 9.2 feet bgs. The alluvial sand underlying the saturated fill materials was moist to a depth of 13.7 feet bgs, which is consistent with the depth to ground water encountered in the majority of the probes on site.

Slug tests by the falling head method were performed on the four newly installed monitoring wells, as described in subsection 2.2.3. The tests were conducted to obtain an estimate of the hydraulic conductivity of the water bearing units adjacent to the screened portion of the wells. The Hvorslev method was used to analyze the falling head test data gathered in the field (Fetter 1992). The estimated hydraulic conductivities for the wells monitoring the alluvium range from 2.3×10^{-4} centimeters per second (cm/sec) at well MW-5 to 1.4×10^{-5} cm/sec at well MW-1. The estimated hydraulic conductivity results, elevations of the screened intervals, and subsurface materials monitored are presented in Table 3-2. The hydraulic conductivity measurements are directly related to the type of media across which the well is screened. For example, water moving through sand has a greater hydraulic gradient than through a silty or clayey sand. The raw data from the slug tests and a brief description of the equipment used and assumptions made during the testing are presented in Appendix C.

The geometric mean of the hydraulic conductivities of the four wells is $8.7x10^{-5}$ cm/sec. This value is closer to a typical value for sand ($1x10^{-4}$ cm/sec) rather than a clay or silt ($1x10^{-5}$ to $1x10^{-6}$ cm/sec).

TABLE 3-2
ESTIMATED HYDRAULIC CONDUCTIVITIES
Remedial Investigation Report
Arkansas City MGP Site

Monitoring Well	Estimated Hydraulic Conductivity (cm/sec)	Approximate Elevation of Screened Interval (feet above msl)	Subsurface Materials Monitored
MW-1	$1.4x10^{-5}$	1,062.2 to 1,072.7	Silt w/ silty sand
MW-2	$1.5x10^{-4}$	1,062.2 to 1,072.2	Silty Sand
MW-3	$1.2x10^{-4}$	1,054.8 to 1,069.8	Sand w/ clay lenses
MW-5	$2.3x10^{-4}$	1,064.2 to 1,074.2	Silty sand w/ sand

Abbreviations:
cm/sec Centimeters per second
msl Mean sea level

Note:
(1) The top of the ground water table was present within the screened interval of each monitoring well during the slug testing activities.

Darcy's law was used to calculate estimates of the average horizontal ground water flow velocity across the site. The calculation for the flow velocity within the saturated alluvium was based on the geometric mean of the hydraulic conductivities ($8.7x10^{-5}$ cm/sec) from the four site wells, the hydraulic gradient between monitoring wells MW-2 and MW-3, and an effective porosity for poorly graded sand of 20 percent (Fetter 1992). This calculation indicates that ground water is flowing through the alluvium at a rate of approximately 2 feet per year, generally to the northeast. This low flow velocity is likely attributable to the relatively flat ground water surface (hydraulic gradient of 0.5 percent between wells MW-2 and MW-3). The ground water calculations are included in Appendix D.

A search of the Kansas Geological Survey (KGS) water well database was completed to determine the number and types of private and commercial water wells in a one-mile radius of the site. There are 32 wells listed in this database within the four sections (approximately one-mile radius) surrounding the site. The closest well was approximately 0.6 miles south of the site. The majority of these wells include

monitoring/observation wells or piezometers, dewatering wells at a nearby quarry, and levee relief wells operated by the Tulsa District of the Army Corps of Engineers (KGS 2002). Three of the wells are owned by private residences, and are listed for domestic use (lawn and garden only). No wells are listed in the database for the southern portion of Section 30 or the northern portion of Section 31, both of which are located downgradient of the site. In addition, the source of municipal water for Arkansas City is ground water, which is obtained from 10 wells approximately 40 feet deep. These wells are screened in the Arkansas River alluvium on the west side of the Arkansas River, approximately 1.5 miles west-northwest of the MGP site.

Additional details on bedrock units, regional hydrology, surface water flow, sensitive environments, and wetlands are presented in the preliminary site assessment (BVWST 1993).

4.0 Analytical Results

The field observations and analytical results for the soil and ground water samples collected at the Arkansas City MGP site during the RI field investigation activities are discussed in this section. The results of the validation of the analytical data are also presented in this section.

4.1 Field Observations and Measurements

Any traces of visible contamination or odors on the probe soil cores were identified and recorded on the probe logs presented in Appendix A. In addition, the results of the PID screening are also included on the logs. Information related to these types of visible contamination observed during the logging and sampling activities is summarized in Table 4-1. Figures 3-1A, 3-1B, and 3-1C also show the depths where visible contamination and PID readings were observed, as well as soil sample depth.

Visible contamination encountered during the RI field activities was limited to petroleum hydrocarbons and tar. Gasoline and/or miscellaneous fuel (possibly degraded gasoline) odors were typically encountered at depths corresponding to the ground water interface or deeper, and were often identifiable by the alluvial materials having a gray to dark gray color. These products have not been identified with any of the gas manufacturing processes or structures shown on the Sanborn fire insurance maps depicting the historical layout of the plant. However, a 1,000-gallon underground storage tank (UST) was formerly located on the south side of the loading ramp (Figure 1-1). This tank was used to store gasoline on the USD 470 property from 1968 until it was removed in 1990 (BVWST 1993) following a release of unknown quantity. KDHE Storage Tank Section records provide the following information: the tank was removed in March 1990; contamination was present in the soil to 14 feet bgs where limestone bedrock was encountered; total petroleum hydrocarbon concentrations in the soil averaged 0 to 500 parts per million; there appeared to be limited lateral movement of the contaminants; and ground water was not encountered in the excavation. The approximate location of the UST is shown on site figures.

The greatest extent of visible gasoline contamination was observed in probes SP-15 and SP-16 located north and southwest, respectively, of the approximate location of the former UST. Fuel odors were also observed in soil probes SP-18 and MW-2 southwest and

TABLE 4-1
SUMMARY OF VISIBLE CONTAMINATION IN SOIL PROBES
Remedial Investigation Report
Arkansas City MGP Site

Soil Probe	Odors and Intervals (feet bgs)	PID Readings and Interval (feet bgs)[1]	Observations
SP-2	Very slight gasoline odor from 12.2 to 13.9	1 ppm at 9.1 16 ppm at 13.2	Odor begins at silty sand/sand interface.
SP-3	Slight gasoline odor from 10.6 to 14.5	2.4 ppm at 2.0 5.8 ppm at 9.5 2.4 ppm at 12.5	PID readings highest at ground water interface in silt.
SP-6	Tar odor and sheen on water from 9.2 to 13.2. Slight gasoline odor from 13.2 to 14.5	150 ppm at 9.5 2 ppm at 13.5	Fill to 13.2 feet bgs (grades tar-coated at 9.2 feet bgs). Gasoline odor begins at fill/alluvial sand interface.
SP-13	Very slight gasoline odor from 13.0 to 13.2	0 ppm throughout probe	Odor in sand on top of bedrock.
SP-15	Heavy gasoline odor from 13.0 to approximately 17.4	10 ppm at 12.8 250 ppm at 13.3 40 ppm at 17.0 0 ppm from 20 to 23.8	Odor was heaviest where sand grades to dark gray at 13 feet bgs.
SP-16	Very slight gasoline odor from 10.1 to 10.5, grades to very heavy from 13.4 to 14.2	50 ppm at 12.5 864 ppm at 13.0 1,534 ppm at 13.7	Faint odor occurs at ground water interface. Heavy odor in dark gray sand overlying bedrock and underlying silty sand.
SP-18	Slight fuel odor from 14.2 to 14.4	17 ppm at 14.3	Silt grades dark gray at 14.2 feet bgs.
SP-19	Very slight gasoline odor from 10.8 to 13.1	0 ppm throughout probe	Silt grades gray and wet at 10.8 feet bgs.
SP-21	No odors encountered	11.4 ppm at 14.4	Sand grades gray at 14.4 feet bgs.
SP-22	Slight tar odor from 16.8 to 17.9	40 ppm at 17.0 2 ppm at 17.6	Odor is in saturated clay on top of bedrock.
MW-2	Very slight fuel odor from 14.5 to 14.8	0 ppm throughout probe	Silty sand grades dark gray at 14.5 feet bgs.

Abbreviations:
ppm Parts per million
bgs Below ground surface

Note:
(1) PID readings of 0 ppm at intervals shallower and deeper than those listed here are not presented in this table.

hydraulically upgradient of the former UST area. The presence of visible contamination and fuel odors upgradient of the former UST area could be associated with the relatively flat ground water gradient and/or migration of gasoline through vadose zone soils (above the ground water potentiometric surface) after a spill event.

Tar-coated slag was present in probe SP-6 from 9.2 to 13.2 feet bgs. Probes SP-20, SP-21, and SP-22 and the probe for well MW-5 were located radially approximately 20 feet from probe SP-6 to delineate the extent of tar in the subsurface. The thickness of fill materials (approximately 5 feet) at these other locations were considerably less than that at probe SP-6, no tar was encountered in any of those probes, and only a slight tar odor was present at the base of probe SP-22, suggesting that probe SP-6 was located in a pit or cavity in which gas plant or foundry-related waste by-products may have been placed.

4.2 Soil Sample Analytical Results

Soil samples were collected from 23 of the 27 probing locations and submitted for chemical analyses. The analytical results are discussed in the following subsections, and the complete analytical results are presented in Appendix E. A table is presented at the start of Appendix E that correlates sample number with sample location for cross-referencing purposes.

4.2.1 Organic Compounds in Soil Samples

Organic compounds detected during the RI field investigation include VOCs, SVOCs, PAHs, and pesticides. The VOC and PAH results are presented on Figures 4-1A and 4-1B. The pesticide data results are summarized on Figure 4-2.

Soil samples for VOC and SVOC analyses were collected from the probes for wells MW-1 and MW-3, and soil probe SP-9. The remainder of the soil samples were analyzed only for BTEXs and PAHs.

VOCs and SVOCs

No SVOCs were detected other than PAHs in probe MW-3. Miscellaneous VOCs (1,2,4-trichlorobenzene and hexachlorobutadiene) were detected in the shallow sample from the probe for well MW-3 at trace concentrations. However, these compounds were not detected in the deep soil sample from the same probe. No VOCs or SVOCs were detected in the other soil samples collected from probes MW-1 and SP-9.

BTEXs

No BTEXs were detected in the shallow or deep subsurface soil samples collected from any of the probing locations. Samples for BTEX analysis were inadvertently not collected from probe SP-6.

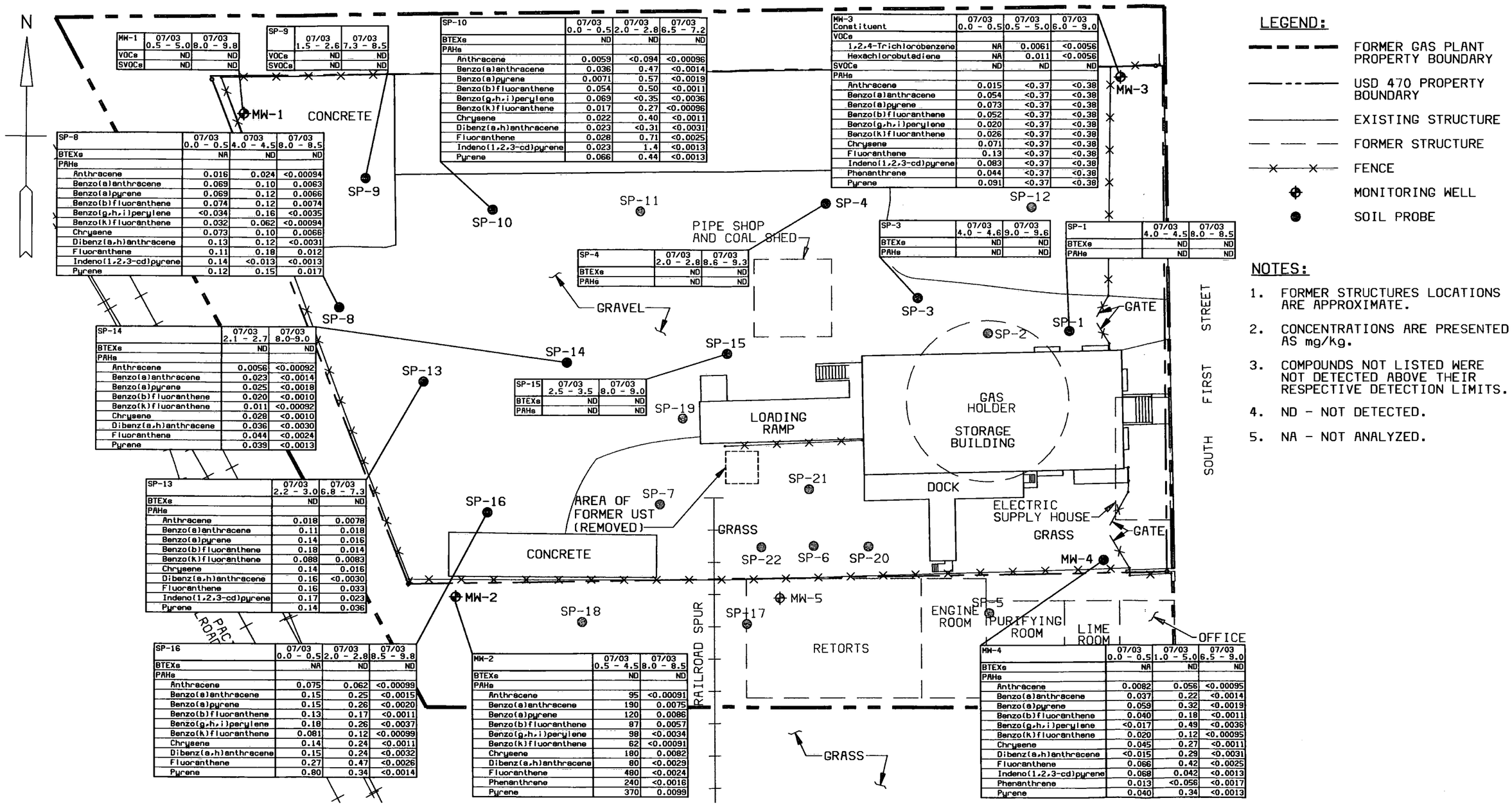

MW-1	07/03 0.5 - 5.0	07/03 8.0 - 9.8
VOCs	ND	ND
SVOCs	ND	ND

SP-9	07/03 1.5 - 2.6	07/03 7.3 - 8.5
VOCs	ND	ND
SVOCs	ND	ND

SP-10	07/03 0.0 - 0.5	07/03 2.0 - 2.8	07/03 6.5 - 7.2
BTEXs	ND	ND	ND
PAHs			
Anthracene	0.0059	<0.094	<0.00096
Benzo(a)anthracene	0.036	0.47	<0.0014
Benzo(a)pyrene	0.0071	0.57	<0.0019
Benzo(b)fluoranthene	0.054	0.50	<0.0011
Benzo(g,h,i)perylene	0.069	<0.35	<0.0036
Benzo(k)fluoranthene	0.017	0.27	<0.00096
Chrysene	0.022	0.40	<0.0011
Dibenz(a,h)anthracene	0.023	<0.31	<0.0031
Fluoranthene	0.028	0.71	<0.0025
Indeno(1,2,3-cd)pyrene	0.023	1.4	<0.0013
Pyrene	0.066	0.44	<0.0013

MW-3 Constituent	07/03 0.0 - 0.5	07/03 0.5 - 5.0	07/03 6.0 - 9.0
VOCs			
1,2,4-Trichlorobenzene	NA	0.0061	<0.0056
Hexachlorobutadiene	NA	0.011	<0.0056
SVOCs	ND	ND	ND
PAHs			
Anthracene	0.015	<0.37	<0.38
Benzo(a)anthracene	0.054	<0.37	<0.38
Benzo(a)pyrene	0.073	<0.37	<0.38
Benzo(b)fluoranthene	0.052	<0.37	<0.38
Benzo(g,h,i)perylene	0.020	<0.37	<0.38
Benzo(k)fluoranthene	0.026	<0.37	<0.38
Chrysene	0.071	<0.37	<0.38
Fluoranthene	0.13	<0.37	<0.38
Indeno(1,2,3-cd)pyrene	0.083	<0.37	<0.38
Phenanthrene	0.044	<0.37	<0.38
Pyrene	0.091	<0.37	<0.38

SP-8	07/03 0.0 - 0.5	07/03 4.0 - 4.5	07/03 8.0 - 8.5
BTEXs	NA	ND	ND
PAHs			
Anthracene	0.016	0.024	<0.00094
Benzo(a)anthracene	0.069	0.10	0.0063
Benzo(a)pyrene	0.069	0.12	0.0066
Benzo(b)fluoranthene	0.074	0.12	0.0074
Benzo(g,h,i)perylene	<0.034	0.16	<0.0035
Benzo(k)fluoranthene	0.032	0.062	<0.00094
Chrysene	0.073	0.10	0.0066
Dibenz(a,h)anthracene	0.13	0.12	<0.0031
Fluoranthene	0.11	0.18	0.012
Indeno(1,2,3-cd)pyrene	0.14	<0.013	<0.0013
Pyrene	0.12	0.15	0.017

SP-4	07/03 2.0 - 2.8	07/03 8.6 - 9.3
BTEXs	ND	ND
PAHs	ND	ND

SP-3	07/03 4.0 - 4.6	07/03 9.0 - 9.6
BTEXs	ND	ND
PAHs	ND	ND

SP-1	07/03 4.0 - 4.5	07/03 8.0 - 8.5
BTEXs	ND	ND
PAHs	ND	ND

SP-14	07/03 2.1 - 2.7	07/03 8.0-9.0
BTEXs	ND	ND
PAHs		
Anthracene	0.0056	<0.00092
Benzo(a)anthracene	0.023	<0.0014
Benzo(a)pyrene	0.025	<0.0018
Benzo(b)fluoranthene	0.020	<0.0010
Benzo(k)fluoranthene	0.011	<0.00092
Chrysene	0.028	<0.0010
Dibenz(a,h)anthracene	0.036	<0.0030
Fluoranthene	0.044	<0.0024
Pyrene	0.039	<0.0013

SP-15	07/03 2.5 - 3.5	07/03 8.0 - 9.0
BTEXs	ND	ND
PAHs	ND	ND

SP-13	07/03 2.2 - 3.0	07/03 6.8 - 7.3
BTEXs	ND	ND
PAHs		
Anthracene	0.018	0.0078
Benzo(a)anthracene	0.11	0.018
Benzo(a)pyrene	0.14	0.016
Benzo(b)fluoranthene	0.18	0.014
Benzo(k)fluoranthene	0.088	0.0083
Chrysene	0.14	0.016
Dibenz(a,h)anthracene	0.16	<0.0030
Fluoranthene	0.16	0.033
Indeno(1,2,3-cd)pyrene	0.17	0.023
Pyrene	0.14	0.036

SP-16	07/03 0.0 - 0.5	07/03 2.0 - 2.8	07/03 8.5 - 9.8
BTEXs	NA	ND	ND
PAHs			
Anthracene	0.075	0.062	<0.00099
Benzo(a)anthracene	0.15	0.25	<0.0015
Benzo(a)pyrene	0.15	0.26	<0.0020
Benzo(b)fluoranthene	0.13	0.17	<0.0011
Benzo(g,h,i)perylene	0.18	0.26	<0.0037
Benzo(k)fluoranthene	0.081	0.12	<0.00099
Chrysene	0.14	0.24	<0.0011
Dibenz(a,h)anthracene	0.15	0.24	<0.0032
Fluoranthene	0.27	0.47	<0.0026
Pyrene	0.80	0.34	<0.0014

MW-2	07/03 0.5 - 4.5	07/03 8.0 - 8.5
BTEXs	ND	ND
PAHs		
Anthracene	95	<0.00091
Benzo(a)anthracene	190	0.0075
Benzo(a)pyrene	120	0.0086
Benzo(b)fluoranthene	87	0.0057
Benzo(g,h,i)perylene	98	<0.0034
Benzo(k)fluoranthene	62	<0.00091
Chrysene	180	0.0082
Dibenz(a,h)anthracene	80	<0.0029
Fluoranthene	480	<0.0024
Phenanthrene	240	<0.0016
Pyrene	370	0.0099

MW-4	07/03 0.0 - 0.5	07/03 1.0 - 5.0	07/03 6.5 - 9.0
BTEXs	NA	ND	ND
PAHs			
Anthracene	0.0082	0.056	<0.00095
Benzo(a)anthracene	0.037	0.22	<0.0014
Benzo(a)pyrene	0.059	0.32	<0.0019
Benzo(b)fluoranthene	0.040	0.18	<0.0011
Benzo(g,h,i)perylene	<0.017	0.49	<0.0036
Benzo(k)fluoranthene	0.020	0.12	<0.00095
Chrysene	0.045	0.27	<0.0011
Dibenz(a,h)anthracene	<0.015	0.29	<0.0031
Fluoranthene	0.066	0.42	<0.0025
Indeno(1,2,3-cd)pyrene	0.068	0.042	<0.0013
Phenanthrene	0.013	<0.056	<0.0017
Pyrene	0.040	0.34	<0.0013

LEGEND:

- FORMER GAS PLANT PROPERTY BOUNDARY
- USD 470 PROPERTY BOUNDARY
- EXISTING STRUCTURE
- FORMER STRUCTURE
- FENCE
- MONITORING WELL
- SOIL PROBE

NOTES:

1. FORMER STRUCTURES LOCATIONS ARE APPROXIMATE.
2. CONCENTRATIONS ARE PRESENTED AS mg/kg.
3. COMPOUNDS NOT LISTED WERE NOT DETECTED ABOVE THEIR RESPECTIVE DETECTION LIMITS.
4. ND - NOT DETECTED.
5. NA - NOT ANALYZED.

REFERENCE: SANBORN FIRE INSURANCE MAPS: 1890, 1899, 1905, 1912, AND 1920
OWNERSHIP/AERIAL MAP,
BOURBON COUNTY, KANSAS, 1988
SMITH & OAKES, INC ENGR: 2003

FIGURE 4-1A
CONCENTRATIONS OF ORGANIC COMPOUNDS IN SOIL
ARKANSAS CITY MGP SITE
RI REPORT
65541-2010- 516-C-T00004G94

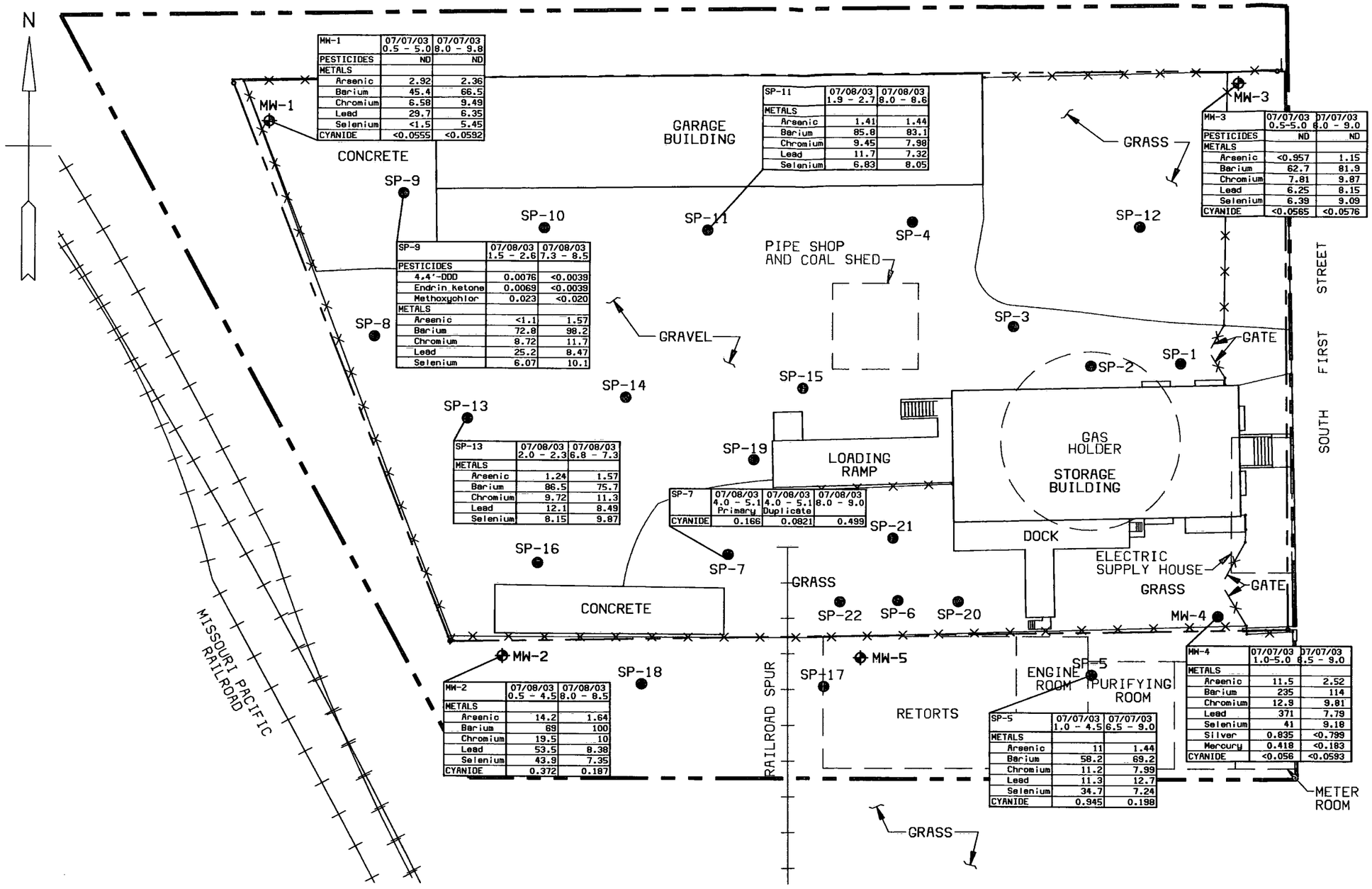

MW-1	07/07/03 0.5 - 5.0	07/07/03 8.0 - 9.8
PESTICIDES	ND	ND
METALS		
Arsenic	2.92	2.36
Barium	45.4	66.5
Chromium	6.58	9.49
Lead	29.7	6.35
Selenium	<1.5	5.45
CYANIDE	<0.0555	<0.0592

SP-11	07/08/03 1.9 - 2.7	07/08/03 8.0 - 8.6
METALS		
Arsenic	1.41	1.44
Barium	85.8	83.1
Chromium	9.45	7.98
Lead	11.7	7.32
Selenium	6.83	8.05

MW-3	07/07/03 0.5-5.0	07/07/03 6.0 - 9.0
PESTICIDES	ND	ND
METALS		
Arsenic	<0.957	1.15
Barium	62.7	81.9
Chromium	7.81	9.87
Lead	6.25	8.15
Selenium	6.39	9.09
CYANIDE	<0.0565	<0.0576

SP-9	07/08/03 1.5 - 2.6	07/08/03 7.3 - 8.5
PESTICIDES		
4,4'-DDD	0.0076	<0.0039
Endrin Ketone	0.0069	<0.0039
Methoxychlor	0.023	<0.020
METALS		
Arsenic	<1.1	1.57
Barium	72.8	98.2
Chromium	8.72	11.7
Lead	25.2	8.47
Selenium	6.07	10.1

SP-13	07/08/03 2.0 - 2.3	07/08/03 6.8 - 7.3
METALS		
Arsenic	1.24	1.57
Barium	86.5	75.7
Chromium	9.72	11.3
Lead	12.1	8.49
Selenium	8.15	9.87

SP-7	07/08/03 4.0 - 5.1 Primary	07/08/03 4.0 - 5.1 Duplicate	07/08/03 8.0 - 9.0
CYANIDE	0.166	0.0821	0.499

MW-2	07/08/03 0.5 - 4.5	07/08/03 8.0 - 8.5
METALS		
Arsenic	14.2	1.64
Barium	69	100
Chromium	19.5	10
Lead	53.5	8.38
Selenium	43.9	7.35
CYANIDE	0.372	0.187

SP-5	07/07/03 1.0 - 4.5	07/07/03 6.5 - 9.0
METALS		
Arsenic	11	1.44
Barium	58.2	69.2
Chromium	11.2	7.99
Lead	11.3	12.7
Selenium	34.7	7.24
CYANIDE	0.945	0.198

MW-4	07/07/03 1.0-5.0	07/07/03 6.5 - 9.0
METALS		
Arsenic	11.5	2.52
Barium	235	114
Chromium	12.9	9.81
Lead	371	7.79
Selenium	41	9.18
Silver	0.835	<0.799
Mercury	0.418	<0.183
CYANIDE	<0.056	<0.0593

LEGEND:

- FORMER GAS PLANT PROPERTY BOUNDARY
- USD 470 PROPERTY BOUNDARY
- EXISTING STRUCTURE
- FORMER STRUCTURE
- FENCE
- MONITORING WELL
- SOIL PROBE

NOTES:

1. FORMER STRUCTURES LOCATIONS ARE APPROXIMATE.
2. CONCENTRATIONS ARE PRESENTED AS mg/kg.
3. COMPOUNDS NOT LISTED WERE NOT DETECTED ABOVE THEIR RESPECTIVE DETECTION LIMITS.
4. ND - NOT DETECTED

REFERENCE: SANBORN FIRE INSURANCE MAPS: 1890, 1899, 1905, 1912, AND 1920
OWNERSHIP/AERIAL MAP,
BOURBON COUNTY, KANSAS, 1988
SMITH & OAKES, INC ENGR: 2003

FIGURE 4-2
CONCENTRATIONS OF PESTICIDES AND INORGANICS IN SOIL
ARKANSAS CITY MGP SITE
RI REPORT
65541-2010-516-C-T00004G95

PAHs

PAHs were detected in the subsurface soil samples collected from the majority of the probing locations. The greatest concentrations of PAHs were present in the deep soil sample collected from probe SP-6. Concentrations of the 12 PAHs detected in this sample ranged from 140 milligrams per kilogram (mg/kg) of benzo(k)fluoranthene to 4,800 mg/kg of naphthalene. This soil sample was collected from 12.0 to 12.6 feet bgs in fill materials (not granular alluvium) consisting of tar-coated slag. PAHs were also detected at this location in the shallow (2.0 to 2.5 feet bgs) subsurface soil sample at concentrations ranging from 3.1 to 9.5 mg/kg.

PAHs were also detected at elevated concentrations in the probe for well MW-2. Eleven PAHs were detected in the shallow subsurface soil sample at concentrations ranging from 62 mg/kg of benzo(k)fluoranthene to 480 mg/kg of fluoranthene. This soil sample was collected from an interval of fill materials consisting of silty sand with some slag and cinders because sample recovery was poor. PAHs were only detected at trace concentrations in the deep soil sample collected from this same location.

Trace to low levels of PAHs were detected in the shallow subsurface soil samples collected from probes SP-2, SP-5, SP-7, SP-8, SP-10 through SP-14, and SP-16 through SP-18. The concentrations of PAHs detected in these probes ranged from 0.0056 to 1.4 mg/kg, which are at levels near the detection limits.

No PAHs were detected in either of the two subsurface sampling intervals of soil probes SP-1, SP-2, SP-3, SP-4, SP-15, SP-20, and MW-3. PAHs were also not detected in the deep sampling intervals from soil probes SP-7, SP-10, SP-12, SP-14, SP-16, SP-17, and MW-4.

In addition to subsurface soil samples, surface soil samples were collected and analyzed for PAHs from soil probes SP-7, SP-8, SP-10, SP-16, SP-17, MW-3, and MW-4. The sample collected from probe SP-7 contained the greatest concentrations of PAHs, which ranged from 1.6 mg/kg of benzo(g,h,i)perylene to 21 mg/kg of pyrene. PAHs were also detected at the other six surface soil sample locations at trace concentrations ranging from 0.0071 to 1.7 mg/kg.

Pesticides

As shown on Figure 4-2, the soil samples from probes SP-9, MW-1, and MW-3 were analyzed for pesticides based on the locations of the probes relative to grain elevators

north of the site. 4,4-DDD, endrin ketone, and methoxychlor were detected at trace concentrations ranging from 0.0069 to 0.023 mg/kg in the shallow soil sample collected from probe SP-9. No pesticides were detected in the deep samples from soil probe SP-9 or in the shallow or deep subsurface soil samples from the other two probes.

4.2.2 Inorganics in Soil Samples

The analyses for inorganics included selected RCRA metals and total cyanide at selected probing locations. The results of these analyses are presented on Figure 4-2.

RCRA Metals

Subsurface soil samples were collected for analysis of selected RCRA metals from soil probes SP-5, SP-9, SP-11, SP-13, MW-1, MW-2, MW-3, and MW-4. Arsenic, barium, chromium, lead, and selenium were detected at each of the probing locations at concentrations ranging from 1.15 mg/kg of arsenic to 235 mg/kg of barium. Mercury (0.418 mg/kg) and silver (0.835 mg/kg) were only detected in the shallow sample from probe MW-4. Cadmium was not detected in any of the subsurface soil samples. In general, the highest concentrations of RCRA metals relative to those detected at the other probing locations occurred in the shallow sample of soil probe MW-4. Concentrations of barium (235 mg/kg) and lead (371 mg/kg) in this sample were typically an order of magnitude greater than those detected at the other sample locations. Relative concentrations of RCRA metals were also high in the shallow sample from the probe for well MW-2. Concentrations of arsenic (14.2 mg/kg), chromium (19.5 mg/kg), and selenium (43.9 mg/kg) were greater in this sample than any of those collected elsewhere at the site.

Cyanide

Total cyanide was detected in both subsurface soil sampling intervals of soil probes SP-5, SP-7, MW-2, and MW-5 at concentrations ranging from 0.0821 mg/kg to 0.945 mg/kg. The highest concentrations of total cyanide occurred in probe SP-5, which was located in the area of the former purifying room. Samples were also collected from probes MW-1, MW-3, and MW-4; however, cyanide was not detected in any of the samples.

4.2.3 Hazardous Waste Characteristics

The shallow and deep subsurface soil samples from probe SP-6 were for analyzed for hazardous waste characteristics including ignitability (flash point), cyanide reactivity, sulfide reactivity, and pH. The results of these analyses are presented in Appendix E.

The shallow sample collected from fill material consisting of silty sand with traces of brick and cinders (2.2 to 5.0 feet) had a flash point of 123.6° Fahrenheit and a pH of 8.45. The deep sample collected from fill material consisting of tar-coated slag (12.0 to 12.6 feet) had a flash point greater than 210° Fahrenheit and a pH of 8.68. Neither sample was reactive with cyanide or sulfide.

4.3 Ground Water Sample Analytical Results

The ground water samples were submitted for chemical analysis of VOCs, SVOCs, pesticides (wells MW-1 and MW-3 only), selected RCRA metals, and total cyanide. The organic and inorganic concentrations detected in the ground water samples are presented on Figure 4-3. The results of these analyses are discussed in the following subsections, and the complete analytical results are presented in Appendix F. A table is presented at the start of Appendix F that correlates sample number with sample location for cross-referencing purposes.

4.3.1 Organic Compounds in Ground Water Samples

The organic analyses included VOCs and SVOCs, including PAHs and pesticides. No VOCs or pesticides were detected in any of the water samples collected from the four monitoring wells. Phenol was detected at a concentration of 33 micrograms per liter (µg/L) in well MW-1, and naphthalene was detected at concentrations of 12 and 10 µg/L, respectively, in the primary and duplicate samples from well MW-5. No SVOCs were detected in monitoring wells MW-2 or MW-3.

A set of trip blanks was submitted with the ground water samples and analyzed for VOCs under the same analytical method as the ground water samples to detect the presence of contaminants that might have been introduced into the ground water samples during sample shipping and handling. No VOCs were detected in the trip blanks.

4.3.2 Inorganics in Ground Water Samples

The inorganic analyses conducted on the ground water samples were for selected RCRA metals and total cyanide.

RCRA Metals

Selected RCRA metals including arsenic, barium, and/or chromium were detected in each of the four wells. Arsenic was detected in wells MW-1 (13 µg/L), MW-3 (11.5 µg/L), and

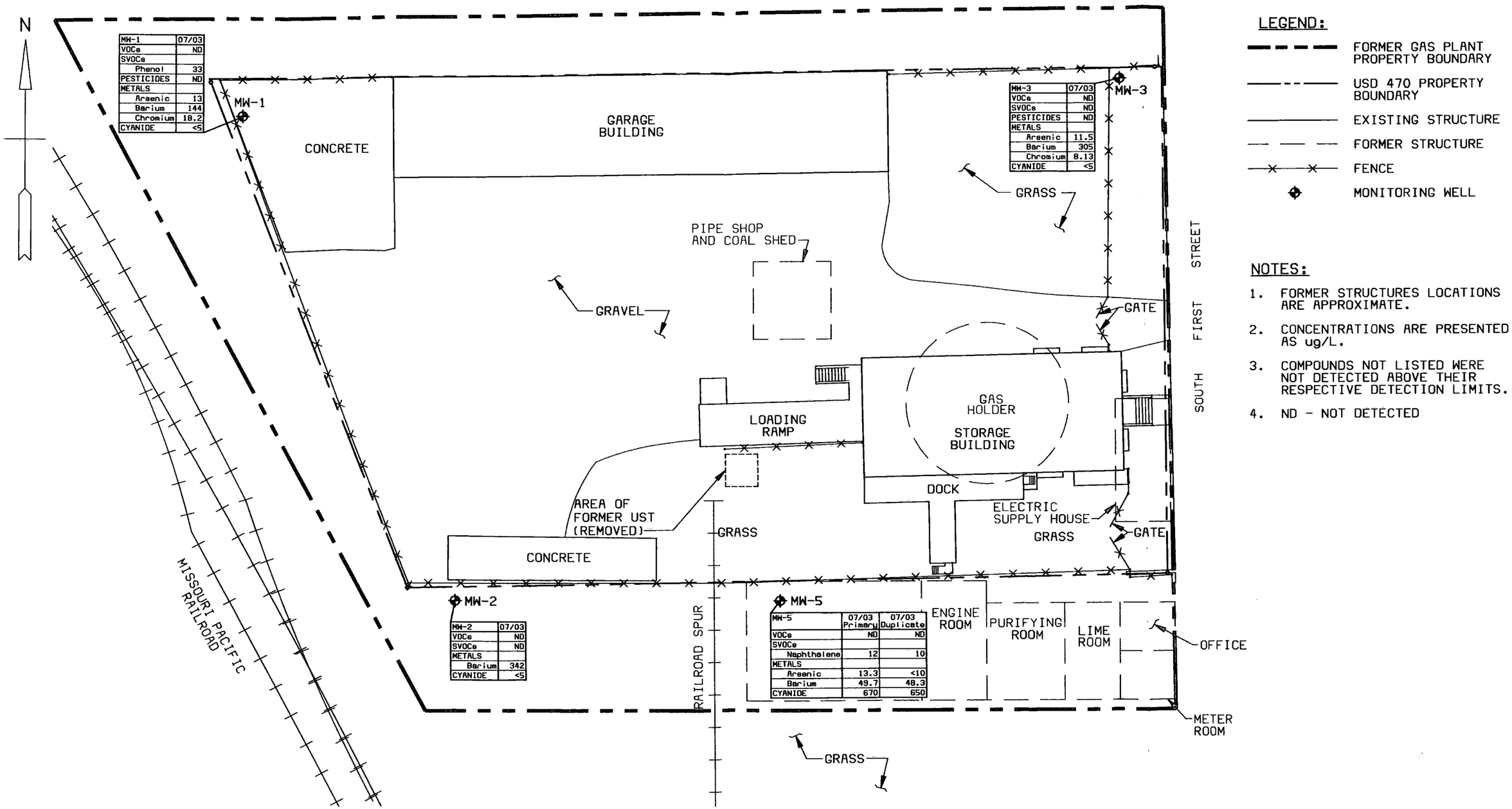

LEGEND:

- FORMER GAS PLANT PROPERTY BOUNDARY
- USD 470 PROPERTY BOUNDARY
- EXISTING STRUCTURE
- FORMER STRUCTURE
- FENCE
- MONITORING WELL

NOTES:

1. FORMER STRUCTURES LOCATIONS ARE APPROXIMATE.
2. CONCENTRATIONS ARE PRESENTED AS ug/L.
3. COMPOUNDS NOT LISTED WERE NOT DETECTED ABOVE THEIR RESPECTIVE DETECTION LIMITS.
4. ND - NOT DETECTED

REFERENCE: SANBORN FIRE INSURANCE MAPS: 1890, 1899, 1905, 1912, AND 1920
OWNERSHIP/AERIAL MAP, BOURBON COUNTY, KANSAS, 1988
SMITH & OAKES, INC ENGR: 2003

FIGURE 4-3
CONCENTRATIONS OF ORGANIC COMPOUNDS AND INORGANICS IN GROUND WATER
ARKANSAS CITY MGP SITE
RI REPORT
65541-2010-516-C-T00004G97

MW-5 (13.3 µg/L, primary sample). Barium was present in all four wells at concentrations ranging from 48.3 µg/L in the duplicate sample from well MW-5 to 342 µg/L in well MW-2. Chromium was present in wells MW-1 and MW-3 at concentrations of 18.2 and 8.13 µg/L, respectively. Cadmium, lead, mercury, selenium, and silver were not detected in any ground water samples.

Cyanide

Total cyanide was detected in the primary and duplicate ground water samples from well MW-5 at concentrations of 670 and 650 µg/L, respectively. It was not detected above the detection limit of 2.0 µg/L in the samples collected from the other three wells.

4.4 Data Validation

The chemical analytical results were reviewed and evaluated before being incorporated into this report. Validata Chemical Services, Inc., of Norcross, Georgia, performed the validation services, which were in accordance with the Environmental Protection Agency's (EPA) *Contract Laboratory Program National Functional Guidelines for Organic Data Review* (EPA 1999) and *Contract Laboratory Program National Functional Guidelines for Inorganic Data Review* (EPA 1994). The analytical data results were acceptable with qualifications.

The analytical data were evaluated in three sample delivery groups (SDG) by the data validator. A SDG is a grouping of samples analyzed and reported by the analytical laboratory together. Table 4-2 presents a summary of the RI samples per SDG.

Qualifications can be characterized as major or minor issues. Major issues are problems with analytical data that cause the data to be considered unusable and correspondingly qualified as rejected or "R." Minor issues are problems with analytical data that do not cause the data to be unusable, but make the values of associated detections or non-detects suspect or estimated, "J."

Three major issues were identified for the data generated during the RI:

1. The column percent difference for aldrin in sample ACMW1S01P exceeded the quality control limit. Because the percent difference was so large (greater than 300 percent), the results for this compound were rejected. Aldrin was detected at a low level in the sample (0.0022 mg/kg) at a concentration slightly above the

TABLE 4-2
SUMMARY OF SAMPLES PER SDG
Remedial Investigation Report
Arkansas City MGP Site

SDG 6072408		SDG 6072415		SDG 6072421
ACMW1S01P	ACSP17S01D	ACSP2S01P	ACSP11S01P	ACSP1S0P
ACMW1S02P	ACSP17S02P	ACSP2S02P	ACSP11S02P	ACSP1S02P
ACMW3S01P	ACSP18S01P	ACSP3S01P	ACSP13S01P	ACSP4S01P
ACMW3S02P	ACSP18S02P	ACSP3S02P	ACSP13S02P	ACSP4S02P
ACMW3SS1P		ACSP7SS1P	ACSP14S01P	ACSP16S01P
ACMW4S01P		ACSP7S01P	ACSP14S02P	ACSP16S02P
ACMW4S02P		ACSP7S01D	ACMW2S01P	ACSP16SS1P
ACMW4SS1P		ACSP7S02P	ACMW2S02P	ACDRUMS01P
ACSP5S01P		ACSP8SS1P		ACMW1W01P
ACSP5S02P		ACSP8S01P		ACMW2W01P
ACSP12S01P		ACSP8S02P		ACMW3W01P
ACSP12S02P		ACSP9S01P		ACMW5W01P
ACSP15S01P		ACSP9S02P		ACMW5W01D
ACSP15S02P		ACSP10SS1P		ACWTDRUMW01P
ACSP17SS1P		ACSP10S01P		ACTRIPBLANK#1
ACSP17S01P		ACSP10S02P		ACTRIPBLANK#2

Abbreviations:

S01	Shallow subsurface soil sample
S02	Deep subsurface soil sample
SS	Surface soil sample
DL	Diluted and re-analyzed sample
P	Primary sample
D	Duplicate sample

detection limit of 0.0019 mg/kg. It was not detected in any of the other soil or ground water samples analyzed for pesticides during the RI.

2. The percent recovery for mercury in sample ACSP9S01P was below the QC limit. Because the recovery was so low (less than 65 percent), the positive result for this metal was rejected. Mercury was not detected with any regularity on site. Only one other soil sample (shallow subsurface soil sample from probe MW-4) contained mercury and no ground water samples contained mercury.

3. The percent recovery for the internal standard perylene-d12 in sample ACWTDRUMW01PDL was below the QC limit. Because the recovery was so low (less than 25 percent), the non-detected results for compounds quantitated against this compound were rejected [di-n-octylphthalate, benzo(b)fluoranthene, benzo(k)fluoranthene, benzo(a)pyrene, indeno(1,2,3-cd)pyrene, and dibenzo(a,h) anthracene]. An undiluted sample (ACWTDRUMW01P) was analyzed previous to the diluted analysis. The laboratory completed both initial and diluted analyses of this sample to confirm whether interferences were caused by matrix effects or internal standards. Since it was due to matrix effects it was appropriate to use the

undiluted sample result to characterize the drum contents for disposal. Therefore, this rejection has no impact on data quality. .

The bulk of the data qualifications occurred because of minor issues with the analytical data. These qualifications can be grouped into the following eight general categories:

1. Exceeding holding times: Holding time is the time frame that a sample should be extracted and/or analyzed within from the time of sample collection. The holding time for VOC analyses was exceeded for samples MW1-S01, MW1-S02, MW-S02, SP9-S01, and SP9-S02. All positive and non-detect VOC results for these samples were qualified as estimated, "J" and "UJ". (Affected SDG 6072408 and 6072415.)

2. Blank contamination: Laboratories analyze and evaluate blanks to determine if any cross contamination occurs in the laboratory during sampling preparation. Phenanthrene was detected in method blanks associated with all SDGs. 2-Methylnaphthalene was detected in one method blank associated with SDG 6072421. The metals blank associated with this SDG also contained barium, chromium, lead, mercury, and selenium at various concentrations. If the concentration of any of these compounds or metals in SDG samples were less than five times the associated blank amount, the concentration was qualified as undetected, "U", with the results less than the detection limit being raised to the value of the detection limit.

3. Exceeding linear calibration ranges: The linear calibration range is the range of concentrations that the instrument is calibrated to read. Several of the samples for PAH analysis in SDGs 6072415 and 6072421 exceeded the linear calibration range of the instrument for selected PAHs during initial analysis. All of these results were qualified as estimated, "J". All of the affected samples were diluted and re-analyzed. All re-analyzed samples met the performance criteria. Therefore, these data were used to evaluate site conditions.

4. Laboratory failed to submit serial dilution data for metals analyses: Serial dilutions are completed to confirm the accuracy of high metal concentrations. Pace did not submit serial dilution data for any SDG. Therefore, per data validation functional guidelines, all positive results for total metals were qualified as estimated, "J". They have not been requested to re-submit these data because the data is acceptable for use with the minor qualifications.

5. Percent recoveries outside of QC limits: Percent recoveries are important because they represent how much interference the sample matrix introduces into the accuracy of an analysis. The percent recoveries for barium, cadmium, lead, and mercury were outside the QC limits in the MS/MSD samples for SDGs 6072408 and 6072421. Therefore, all positive detection and non-detected results were

qualified as estimated, "J" and "UJ," respectively. The percent recovery of perylene-d12 in sample WTDRUM-W01 of SDG 6072421 was below QC limits. Therefore, all positive results for all of the PAHs quantitated against this compound were qualified as estimated, "J".

6. Exceeding ultraviolet detector instrument ranges: Exceeding the ultraviolet detector instrument ranges indicates the instrument calibration may have drifted, due to matrix interference or high concentrations of individual analytes. Selected PAHs in all SDGs exceeded the ultraviolet detector instrument QC limits for samples MW4-S01, SP18-S01, SP1-S02, and SP16-SS1DL. The results were qualified as estimated, "J" or "UJ," depending on whether the sample contained a positive detection of the affected PAH or it was not detected.

7. Percent differences outside of instrument QC limits: Percent recoveries are important because they are a check to ensure the instrument is retaining its calibration. The percent differences for selected VOCs, SVOCs, and pesticides in SDGs 6072408 and 6072421 were outside of their instrument QC limits. This resulting in qualifying all positive detections and non-detect results for the affected compounds in the associated samples as estimated, "J" and "UJ", respectively.

8. Exceeding pesticide column percent differences: Exceeding column percent differences means the two columns that the instrument uses to measure concentrations reported significantly different results for the same compound in the same sample. For SDG 6072421, the column percent differences for 4,4'-DDD, methoxychlor, and endrin ketone in sample SP9-S01 exceeded the QC limit. Therefore, the positive results for these compounds were qualified as estimated, "J".

Although a significant number of minor qualifications was required, the data are considered to be of moderate to good quality by the data validator (Validata 2003). The complete data validation reports are presented in Appendix G.

5.0 Extent of Contamination

This section summarizes the extent of soil and ground water contamination on site based on the results of the RI field activities; a comparison of the analytical results to applicable regulatory levels; and a brief summary of contaminant fate and transport.

5.1 Soil

Soil sample analytical results were compared with the KDHE Tier 2 Risk-Based (RSK) levels for the Soil Pathway and the Soil to Ground Water Pathway for the non-resident scenario (KDHE 2003). PAHs, pesticides, selected RCRA metals, and cyanide were detected in several of the soil samples. However, only PAHs were present at concentrations exceeding the RSK levels. Individual PAHs were present at or above their respective RSK levels at three probe locations (SP-6, SP-7, and MW-2). Table 5-1 presents the RSK levels for PAHs and the range of concentrations detected in probes SP-6, SP-7, and MW-2.

PAHs at Soil Probe MW-2

The shallow sample from the probe for well MW-2 contained 11 PAHs at concentrations that exceeded the RSK levels under both the soil and the soil to ground water protection pathways. This sample was collected from silty sand fill materials that contained some cinders and slag. However, no visible soil staining, odors, or PID readings were encountered within the sampling interval. Poor recovery of soil occurred while probing to 5 feet bgs in probe MW-2; therefore, the relative percentage of slag and cinders at this location compared to soil fill is unknown. Because of the lack of visible contamination throughout the large sample interval, the RSK exceedences may reflect the high percentage of slag and cinders in the sample, and not general subsurface conditions from 0 to 5 feet bgs. In the shallow (4.0 to 4.5 feet bgs) sample from probe SP-18, located approximately 40 feet east of the probe for well MW-2, PAHs were detected at trace concentrations. This sample was collected from native alluvium underlying the slag and cinders from 0.5 to 4 feet bgs.

PAHs at Soil Probe SP-6

The deep soil sample collected from probe SP-6 contained the greatest number and concentrations of individual PAHs exceeding the RSK levels for both pathways. Although this soil sample was collected from an interval (12.0 to 12.6 feet bgs)

TABLE 5-1
PAHs EXCEEDING OF KDHE TIER 2 RISK-BASED LEVELS IN SOIL
Remedial Investigation Report
Arkansas City MGP Site

PAH	RSK Level (mg/kg)[1]		Concentration Detected[2] (mg/kg)		
	Soil Pathway	Soil to Ground Water Protection Pathway	MW-2	SP-6	SP-7
Anthracene	13	13	95	870	6.8
Benzo(a)anthracene	26	35	190	410	10
Benzo(a)pyrene	2.6	16	120	290	6.1
Benzo(b)fluoranthene	19	19	87	240	5.6
Benzo(k)fluoranthene	10	10	62	140	3.4
Chrysene	6.4	6.4	180	320	8.3
Dibenzo(a,h)anthracene	2.6	11	80	210	5.78
Fluoranthene	220	220	480	1,100	24
Fluorene[3]	270	270	ND	740	2.8
Naphthalene[3]	320	140	ND	4,800	ND
Pyrene	140	140	370	890	21

Abbreviations:
mg/kg Milligrams per kilogram
ND Not detected

Notes:
(1) From *Risk-Based Standards for Kansas, RSK Manual –3rd Version*, dated March 2003.
(2) Concentrations present in the shallow soil sample from probe MW-2, deep soil sample from probe SP-6, and surface soil sample from probe SP-7.
(3) These PAHs were likely not detected in the shallow soil sample from probe MW-2 because of the increased detection limits resulting from the elevated concentrations of other PAHs detected in the sample.

immediately above the ground water table, a zone of perched ground water was encountered in the fill material in this probe that makes comparison of data to the RSK levels for the soil pathway not directly applicable. Based on the lack of visible contamination and elevated levels of PAHs in the probes advanced around probe SP-6 (SP-20, SP-21, SP-22, and MW-5), this contamination appears to be isolated.

Fill materials consisting of tar-coated slag with cinders were present in probe SP-6, which appears to have been advanced into a possibly man-made pit. The presence of a large interval of slag and cinders in this probe and its proximity to the former retort room suggest that by-products of manufactured gas production or residuals associated with the former foundry were placed into a pit at this location. The tar observed in probe SP-6 is most likely related to former gas operations, and possibly to the above ground gas holder

formerly located to the northeast. The gas holder base was not encountered in any of the probes advanced north of the storage building, and historical drawings of the site indicate that the gas holder would have been located in the area of storage building. However, the presence of a basement under the storage building, and the lack of deep fill (8 to 12 feet bgs based on typical below grade holders encountered at similar sites) suggest that the gas holder was an above grade structure, which was probably dismantled and removed before the construction of the Kansas Gas & Electric Company's supply and meter warehouse (current storage building) some time before 1934.

PAHs at Soil Probe SP-7

The surface soil sample collected from probe SP-7 contained chrysene at a concentration (8.3 mg/kg) that exceeded the RSK level under both pathways, as well as concentrations of benzo(a)pyrene (6.1 mg/kg) and dibenzo(a,h)anthracene (5.7 mg/kg) exceeding the soil pathway RSK levels. This sample was composed of sandy gravel fill materials, and was located at a surface depression noted during the preliminary site assessment and brought to our attention by USD 470 personnel. Fill materials have been reportedly been placed into this area for several years because it continues to sink. Therefore, the PAHs detected in the near surface soil at this location are probably not related to former MGP or foundry operations, particularly if the fill materials are from an offsite source.

Metals and Cyanide in Soil

No soil samples had metals concentrations exceeding the RSK levels for the Soil Pathway. RSK levels for the Soil to Ground Water Protection Pathway are available for arsenic only. The RSK level for arsenic (5.84 mg/kg) was exceeded in the shallow samples from probes MW-2, MW-4, and SP-5 at concentrations ranging from 11 to 14.2 mg/kg. These samples consisted of fill materials, often containing slag or cinders. The presence of RCRA metals on site may be related to former gas plant operations, products or residuals related to the former foundry, or regional conditions.

Total cyanide was detected at low levels in the soil samples collected from probes SP-5 SP-7, and MW-2. No RSK levels for total cyanide in soil are available. However, the RSK level for free cyanide (soil pathway) is 41,000 mg/kg, which is significantly greater (five orders of magnitude) than the highest detection of total cyanide encountered at the site. The presence of cyanide is likely related to former gas plant operations because the plant was known to have produced manufactured gas by the coal carbonization process, a process which typically produced cyanide during the purifying stage of gas production.

RCRA Criteria

Because tar was encountered, soil samples for analysis of RCRA hazardous waste characteristics were collected from probe SP-6. The results of these analyses were compared to the RCRA hazardous waste classification criteria (40 Code of Federal Regulations 261). The results of this comparison are presented in Table 5-2.

Neither of the samples qualified as hazardous waste based on those criteria, with the exception of the ignitability/flashpoint analysis for the shallow sample. The flash point was 123.6 degrees Fahrenheit, which is less than the 140 degrees Fahrenheit criteria for RCRA hazardous waste classification. However, this sample was collected from an interval of silty sand fill material with no visible contamination or PID readings. Therefore, the results of the ignitability/flash point analysis for the shallow soil sample from probe SP-6 appear to be an anomaly.

TABLE 5-2
HAZARDOUS WASTE CHARACTERISTICS OF SOIL
Remedial Investigation Report
Arkansas City MGP Site

Sample Interval in Probe SP-6 (feet bgs)	Flash Point (Degrees Fahrenheit)	Cyanide Reactivity (mg/kg)	Sulfide Reactivity (mg/kg)	pH
RCRA Limit	<140	>250	>500	--
Shallow (2.2-5.0)	123.6	<0.592	<11.8	8.45
Deep (12.0-12.6)	>210	<0.652	<13.0	8.68

5.2 Ground Water

The organic and inorganic analytical results for the ground water samples were compared with the KDHE Tier 2 RSK levels under the Ground Water Pathway for the non-resident scenario. No organic contaminant levels (e.g., PAHs) exceeded the RSK levels.

The concentration of total cyanide in well MW-5 exceeded the RSK level for free cyanide of 200 µg/L. However, because the analytical results for cyanide in ground water at the site were reported as total cyanide, whereas the RSK level is for free cyanide, no direct comparison can be made between the RI ground water results and the regulatory limits for cyanide.

Of the detected metals in ground water, only concentrations of arsenic exceeded the RSK levels. Total arsenic was detected in the ground water in wells MW-1 (13 µg/L), MW-3 (11.5 µg/L), and MW-5 (13.3 µg/L in primary sample, non-detect in duplicate sample). These concentrations are slightly greater than the RSK level of 10 µg/L. KDHE guidance does not indicate whether the promulgated RSK value is for total or dissolved arsenic.

5.3 Contaminant Fate and Transport

A description of general migration processes of the chemicals detected during the RI at concentrations above the RSK levels, and the chemical and physical characteristics affecting those processes are presented in the following subsections.

5.3.1 Potential Migration Routes

Organic and inorganic contamination was detected in the soil and ground water samples collected at the site during the RI. The most likely potential route for migration of this contamination is by way of surface water and/or ground water flowing through the subsurface units. Rainwater infiltrating from the ground surface and percolating downward to the ground water table could carry the more soluble contaminants down through the subsurface units and into the ground water.

Ground water flowing across the site has the potential to either carry contamination with it or to bring contamination onto the property from offsite sources. It is likely that shallow ground water on the site eventually discharges to the nearby Walnut River.

Contaminants migrating in the ground water through the granular portion of fill and alluvial materials in the subsurface would move horizontally at a faster rate than those moving through the cohesive materials which are also present in the fill and alluvium. However, as discussed in Section 3.2, with the low horizontal ground water flow rate of 2 feet per year at the site, contaminant migration off site toward receptor populations will be slow. These discontinuous cohesive materials present in the alluvium would also concurrently reduce the ability of molecularly heavier contaminants to move vertically down through the subsurface. Movement of the lighter molecular weight contaminants in ground water would probably not be affected by these cohesive materials because the contaminants are present near the ground water interface. If present, the heavier molecular weight compounds would be expected to migrate down through the granular subsurface materials until they encountered bedrock. However, this was not the case at

probe SP-6 where tar was encountered in granular fill materials, yet was not present in the underlying alluvial sand encountered in the probe, or at similar depths in adjacent probes.

5.3.2 Contaminant Physical Characteristics and Migration Potential

The physical characteristics and the related migration potential of the chemicals of potential concern are described in the following paragraphs. The background information for each chemical was obtained from a variety of sources, including the toxicological profiles provided by the Agency for Toxic Substances and Disease Registry (ATSDR) as listed in the Toxicological Profiles for Hazardous Substances Found at National Priorities List (NPL) Sites (ATSDR 2002).

PAHs

Individual PAHs were detected in the majority of the soil samples and one of the ground water samples collected during the RI field activities. PAHs are typically associated with petroleum-based products, as well as in the manufacture of dyes, plastics, and pesticides. They typically have low to moderate volatilities and solubilities, as well as high partition coefficients, which cause them to adhere to other organic particles. The density and solubility of PAHs in comparison to water varies greatly between individual compounds. The physicochemical properties of PAHs are summarized in Table 5-3.

Although PAHs were detected in several soil samples, they were typically present in dry fill materials (e.g., probes SP-7 and MW-2), with the exception of the water-saturated tar-coated fill material in probe SP-6. The physical characteristics of these compounds indicate that the majority of them are likely to adhere to soil particles near where they were initially deposited and would undergo little migration, with the exception of the lighter, more mobile, and soluble PAHs, which can migrate downward toward the ground water table and on top of or through the ground water column. However, based on the presence of tar in the fill and not in the underlying granular alluvium at probe SP-6, the lack of significant quantities of these compounds in the soil at adjacent probe locations, and lack of detection of similar or even lower concentrations in the ground water at downgradient well MW-3, indicate that either little horizontal or vertical migration is taking place, or that the compounds are attenuating and degrading. Subsequently, migration potential is low at the Arkansas City MGP site.

TABLE 5-3
PHYSICOCHEMICAL PROPERTIES OF PAHs
Remedial Investigation Report
Arkansas City MGP Site

PAH	CAS No.	Mol.ecular Weight	Melting Point (°C)	Boiling. Point (°C)	Specific Gravity	Solubility in Water (mg/L)	Vapor Pressure (mmHg)	Henry's Law (atm-m^3/mol.)	Log K_{oc}	Log K_{ow}	Half-Life (Days)	BCF
Naphthalene	91-20-3	128.17	80.5	218	1.16	31.7	2.3E-1	1.15E-3	3.11	3.44	80[ae], 7-1,700[h]	150
Anthracene	120-12-7	178.23	217	340	1.25	0.045	1.95E-4	1.2E-3	4.14	4.45	50-475[ae], 200-1825[h]	NA
Acenaphthene	83-32-9	154.21	96.2	279	1.23	3.42	1.55E-3	9.2E-5	3.66	4.00	12-102[ae], 49-480[h]	387
Acenaphthylene	208-96-8	152	92	265	0.9	3.93	2.9E-2	1.48E-3	3.40	4.07	NA	NA
Fluorene	86-73-7	166.21	116	293	1.2	1.69	7.1E-4	6.42E-5	3.86	4.20	32-60[ae], 128-240[h]	NA
Phenanthrene	85-01-8	178.24	101	340	0.98	1.29	6.8E-4	1.59E-4	4.36	4.46	16-200[ae], 2-800[h]	NA
Pyrene	129-00-0	202.23	156	393	1.27	0.132	2.5E-6	5.04E-6	4.58	4.88	210-1,898[ae], 840-7,592[h]	1,513
Fluoranthene	206-44-0	202.26	107	250	1.25	0.206	5.0E-6	6.46E-6	4.58	4.90	140-440[ae], 548-1,752[h]	NA
Chrysene	218-01-9	228.2	254	488	1.27	1.8E-3	6.3E-9	1.05E-6	5.30	5.61	365-986[ae], 1,460-4,015[h]	NA
Benzo(a)anthracene	56-55-3	228	162	435	1.17	5.7E-3	2.2E-8	1.16E-6	6.14	5.60	100-694[ae], 365-2,920[h]	63
Benzo(a)pyrene	50-32-8	252.32	177	475	1.35	1.2E-3	5.6E-9	1.55E-6	6.74	6.06	365-621[ae], 1,460-2446[h]	28,200
Benzo(b)fluoranthene	205-99-2	252.32	163	NA	NA	1.4E-2	5.00E-7	1.19E-5	5.74	6.06	548-657[ae], 2,373-2,592[h]	NA
Benzo(g,h,i)perylene	191-24-2	276	276	NA	NA	7.00E-4	1.03E-10	5.34E-8	6.20	6.51	913-2,117[ae], 3,285-8,760[h]	31-2177
Benzo(k)fluoranthene	207-08-9	252.32	217	480	NA	4.30E-3	5.1E-7	3.94E-5	5.74	6.06	NA	NA
Dibenz(a,h)anthracene	53-70-3	278.35	226	524	1.25	5.00E-4	1.00E-10	7.33E-8	6.51	6.80	NA	38, 214
Indeno(1,2,3-cd)pyrene	193-99-5	276	NA	NA	NA	5.3E-4	1.00E-10	6.86E-8	6.20	6.50	584-730[ae], 2,409-2,920[a]	NA

Abbreviations:

ab	anaerobic
ae	aerobic
BCF	Bioconcentration factor (usually aquatic)
h	hydrolysis
NA	Not available

References:

ATSDR 1990
Hounslow 1989
Howard 1989
HSDB 1994
Weist 1984
Windholz 1983

Cyanide

Total cyanide was detected in soil samples in primarily the southern portion of the site, and the ground water sample collected from well MW-5, which is also located in the southern portion of the site. Cyanide is a naturally-occurring compound, yet is more likely to be present as a result of metal mining processes, coal processing, organic chemical industries, iron and steel works, vehicle exhaust, and municipal waste burning. When present in surface water it will form hydrogen cyanide and evaporate, as it will sometimes do to a lesser extent in near surface soil. Some forms of cyanide will become attached to soil particles, but cyanide usually does not seep into and become dissolved in ground water, unless it is present in the subsurface in great quantities or concentrations (e.g., landfills). Some cyanide in water will be transformed into less harmful chemicals by microorganisms, or will form a complex with metals, such as iron. Cyanide generally has a strong affinity for binding to soil particles, and is likely not to be dissolved in ground water. The physicochemical properties of cyanide are summarized in Table 5-4.

Arsenic

Arsenic can exist in the +5, +3, +1, 0, and -3 oxidation sites. Arsenate (+5) and arsenite (+3) are the most soluble forms. The most mobile state of arsenic (arsenite) occurs under mildly reducing conditions that lack hydrogen sulfide (Fetter 1993). Arsenic is usually found combined with oxygen, chlorine, or sulphur as inorganic arsenic; it may also combine with a hydrocarbon as organic arsenic. Arsenic can undergo oxidation-reduction reactions, biotransformation, precipitation, and adsorption (ATSDR 1987). Arsenic is known to bioaccumulate. Arsenic is used in alloys, certain types of glass, electronic devices, medication, radioactive tracers, and semiconductors. Natural sources of arsenic are mainly sulfide ores and some clays (HSDB 1994). The physicochemical properties of arsenic are summarized in Table 5-4.

TABLE 5-4
PHYSIOCHEMICAL PROPERITES OF INORGANICS
Remedial Investigation Report
Arkansas City MGP Site

Analyte	CAS No.	Molecular Weight	Melting Point (°C)	Boiling Point (°C)	Specific Gravity	Solubility in Water (mg/L)	Vapor Pressure (mmHg)	Henry's Law (atm-m^3/ mol)	Half-Life (Days)	BCF	Typical Background Concentration Range (ppm)	
Arsenic	7440-38-2	74.9	818	NA	5.73	NA	NA	NA	NA	44	1-40	4-30
Arsenic pentoxide	1303-28-2	229.8	315 (decomp)	NA	4.32	Freely soluble	NA	NA	NA	NA	NA	NA
Arsenic trioxide	1327-53-3	197.8	312.3	465	3.74	2,100	NA	NA	NA	NA	NA	NA
Arsenic trisulfide	1303-33-9	246	300-325	707	3.46	Prac. soluble	NA	NA	NA	NA	NA	NA
Calcium arsenate	7778-44-1	77.9	-117	-62.5	2.70	130	NA	NA	NA	NA	NA	NA
Sodium arsenate	7778-43-1	398.1	1,455	NA	3.62	Very soluble	NA	NA	NA	NA	NA	NA
Sodium arsenite	7784-46-5	185.9	57	NA	1.87	Freely soluble	NA	NA	NA	NA	NA	NA
Barium Cyanide	542-62-1	189	NA	NA	NA	685,000	NA	NA	NA	NA	NA	NA
Hydrogen Cyanide	74-90-8	27	-14 to -13.4	25.6	NA	1,000,000	620	NA	NA	0	NA	NA

Abbreviations:
BCF Bioconcentration Factor (usually aquatic).
NA Not available.

References:
ATSDR 1987
Chemfinder.com
Dragun 1988
Fetter 1993
EPA 1988
LaGrega 1994

6.0 Summary and Conclusions

This section contains a brief summary of the RI field activities and the objectives of the RI, conclusions regarding the RI results, and recommendations for future actions.

6.1 Summary of Investigation

Twenty-seven direct push probes were advanced at the site to determine the site geology, to determine the extent of subsurface contamination, to collect soil samples for chemical analysis, and to install and sample ground water monitoring wells. The soil and ground water samples were submitted for various analyses with the purpose of detecting chemicals typically associated with MGP processes (e.g., PAHs) or potential offsite contamination sources (e.g., grain elevators). The following objectives were achieved as a result of the RI field investigation:

- The potential contaminant source areas at the site were characterized through the installation and sampling of soil probes and ground water monitoring wells. The areas investigated included surface soil, subsurface soil, and ground water in and around the areas associated with known former gas plant operations.

- Information obtained from the probe boring logs, the collection of ground water elevations from the site monitoring wells, and aquifer tests conducted on the monitoring wells was used to assess the geological, hydrogeological, and hydrological conditions of the site.

- The extent of soil and ground water contamination was determined by comparison of detected concentrations with the Kansas RSK levels.

- The potential for contaminant migration off site, including characterizing the physiochemical properties of site contaminants, their mobility and persistence in the environment, and their fate and transport mechanisms, was evaluated.

Historical information indicates that a gas holder was located on the MGP property. It was not located during the RI and was likely an above ground structure based on its location relative to the storage building which has a basement and was constructed after the gas plant ceased operations. However, what appears to be a man-made pit used to dispose of slag and cinders generated during gas plant or foundry operations was encountered southwest of the gas holder and adjacent to the former retorts. Tar was encountered within the slag between approximately 9 and 13.5 feet in the probe advanced into this area, and is most likely related to former gas plant operations. However, soil

probes advanced at approximately 20-foot intervals north, east, south, and west of this location did not contain any visible signs of tar. Therefore, it appears that the vertical and horizontal extent of this pit has been delineated to be less than 40 feet in diameter.

Visible contamination and odors related to petroleum fuel were encountered in several soil probes oriented northeast to southwest in the general area of the former leaking gasoline UST, which was removed from the USD 470 property in 1990.

Elevated levels of PAHs were detected in three probes (MW-2, SP-6, and SP-7). These probes were advanced south and west of the former gas plant. Probe SP-6 was advanced within what appears to have been the man-made pit, while probe SP-7 was advanced into a surface depression into which fill material has been placed over the years. No BTEXs were detected in any of the soil samples. Trace levels of miscellaneous VOCs and pesticides were detected in two probe samples. Soil samples collected from probes MW-2 (shallow soil containing slag), SP-6 (slag containing tar), and SP-7 (fill material placed by USD 470 personnel) contained individual PAHs that exceeded their respective RSK levels. In addition, the RSK level for arsenic was exceeded in the shallow soil samples collected from probes MW-2, MW-4, and SP-5. However, these samples were collected from intervals comprised of fill materials, often containing slag or cinders.

With the exception of low levels of naphthalene in well MW-5 and phenols in well MW-1, no organic contaminants were detected in site monitoring wells. Total cyanide was also detected in well MW-5. Only low levels of three RCRA metals were detected in monitoring well MW-3 which is hydraulically downgradient of the former MGP operations area.

None of the ground water detections exceeded the Kansas RSK levels with the exception of the concentration of total cyanide in well MW-5, and the low levels of arsenic in wells MW-1, MW-3, and MW-5, indicating that soil contamination has not adversely impacted ground water conditions. However, because the RSK level is for free cyanide rather than total cyanide, and free cyanide is only a portion of total cyanide, it is unclear at this point whether free cyanide is actually present at a concentration exceeding the RSK level in ground water. Additional ground water samples will need to be collected from site wells and analyzed for free cyanide to determine if the concentration exceeds the RSK level. In addition, ground water samples for filtered (dissolved) and unfiltered (total) selected RCRA metals need to be collected to determine if concentrations of total arsenic detected

during the RI were influenced by the presence of arsenic attached to suspended soil particles present in the unfiltered ground water samples. Arsenic can be associated with MGP or foundry operations.

6.2 Conclusions

The soil and ground water samples collected at the site, combined with subsurface stratigraphic information and ground water flow direction and velocity data were used to characterize the nature and extent of contamination at the MGP site. The extent of visible contamination on site was delineated both vertically and horizontally by advancing additional probes (not specified in the work plan) and ground water data from the downgradient monitoring well.

The samples exceeding RSK levels have been identified and the areas reviewed with respect to potential exposure and future migration of contaminants related to the former gas plant. This potential for exposure and migration is low based on the following rationale:

- There is only one location (probe SP-7) with contaminants exceeding RSK levels in the near surface soil.
- Areas of subsurface soil contamination in excess of RSK levels are isolated.
- No detections of PAHs at concentrations exceeding the RSK levels are present in ground water.
- The horizontal flow velocity is low, indicating that contamination migration in ground water off site is slow.
- The contaminants encountered at the site typically have high affinities for adhering to soil particles, as well as low water solubilities, further reducing their potential to migrate through the subsurface and potentially off site.
- No structure is present on site that contains a significant amount of source material with a potential to release contamination to the subsurface.

The only contamination that can be attributed to former MGP operations with any certainty is the tar-coated fill materials encountered in probe SP-6. The slag and cinder fill materials observed in the southern portion of the site and related to the majority of the PAH detections, as well as the detections of RCRA metals, may be related to gas plant

operations or residuals associated with the foundry that operated in the former gas operations building. The gasoline odors observed during the probing activities are most likely residual contamination related to a leaking gasoline UST that was removed from the site in 1990.

The slag material in probe SP-6 containing tar and PAHs in excess of the RSK levels is present within an area of perched ground water. Because of its depth, it does not pose a current soil exposure risk. The shallow sample collected from this probe (2.2 to 5 feet bgs) contained low levels of PAHs considerably less than action levels. Therefore, this area of deep slag appears to be isolated based on the information obtained from advancing soil probes MW-5, SP-20, SP-21, and SP-22 around probe SP-6. In addition, none of the PAHs with soil concentrations exceeding the RSK levels were detected in the ground water sample collected from well MW-5. Because of the proximity of well MW-5 to probe SP-6, any significant impact from soil contamination at the probe would be evident in the well.

The elevated levels of three PAHs detected in the surface soil sample from probe SP-7 are not likely MGP-related because the probe was advanced in a depressed area where backfill has been placed to fill up the depression over the last few years.

The elevated concentrations of PAHs and arsenic in the shallow soil samples collected from the probes on the Bay property are likely associated with the slag and cinders observed at those locations. Slag materials can be observed at the ground surface over much of the central and west portions of the Bay property. This material was likely associated with foundry operations after gas production at the MGP ceased in 1905.

6.3 Recommendations for Future Actions

It is recommended that additional ground water samples be collected from site wells to verify that residual soil contamination (as a result of former MGP and foundry operations and the USD 470 UST formerly located on site) is not impacting ground water on site and to determine the levels of free cyanide and total and dissolved arsenic in ground water.

7.0 References

ATSDR 1987. *Draft Toxicological Profile for Arsenic*, prepared by Life Systems, Inc., Oak Ridge National Laboratory, Oak Ridge, TN, 1987.

ATSDR 1990. U.S. Department of Health and Human Services, Public Health Service, Agency for Toxic Substances and Disease Registry (ATSDR), *Toxicological Profile for Polycyclic Aromatic Hydrocarbons*, TP-90-20, December 1990.

ATSDR 2002. Agency for Toxic Substances and Disease Registry, *Toxicological Profiles for Hazardous Substances Found at National Priorities List (NPL) Sites*, updated April 8, 2002.

Bayne 1962. C.K. Bayne, *Geology and Ground-Water Resources of Cowley County, Kansas*, Kansas Geological Survey Bulletin 158, dated 1962.

B&V 2003. Black & Veatch, *Remedial Investigation Work Plan, Arkansas City, Kansas*, prepared for Westar Energy, March 2003.

BVWST 1993. Black & Veatch Waste Science and Technology, *Final Preliminary Assessment, Former Manufactured Gas Plant, Arkansas City, Kansas*, prepared for Western Resources, Inc., June 1993.

Dragun 1988. James Dragun, *The Soil Chemistry of Hazardous Materials*, Hazardous Materials Control Research Institute, Silver Spring, Maryland, 1988.

EPA 1986. U.S. Environmental Protection Agency, Superfund Public Health Evaluation Manual, EPA/540/1-86/060, 1986.

EPA 1988. United States Environmental Protection Agency, *Guidance for Conducting Remedial Investigations and Feasibility Studies Under CERCLA (Interim Final)*, OSWER Directive 9355..3-01, October 1998.

EPA 1994. United States Environmental Protection Agency, *Laboratory Data Validation Functional Guidelines For Evaluating Inorganics Analyses*, 1994.

EPA 1999. United States Environmental Protection Agency, *Laboratory Data Validation Functional Guidelines For Evaluating Organics Analyses*, 1999.

Fetter 1992. Fetter, C.W., *Applied Hydrogeology, Third Edition*, Prentice-Hall, 1992.

Fetter 1993. C.W. Fetter, *Contaminant Hydrogeology*, MacMillian Publishing Company, New York, 1993.

Hounslow 1989. A.W. Hounslow, *Organic Geochemistry*, database, Oklahoma State University, 1989.

Howard 1989. Phillip H. Howard, *Handbook of Environmental Fate and Exposure Data for Organic Chemicals*, Volume I, Lewis Publishers, Chelsea, MI, 1989.

HSDB 1994. Hazardous Substance Data Bank (HSDB), Found in the Tomes Data Base, Micromedex, Inc., Volume 19, 1994.

KDHE 2002. Kansas Department of Health and Environment, Consent Order No. 94-E-0172, signed by Western Resources.

KDHE 2003. Kansas Department of Health and Environment, *Risk-Based Standards for Kansas, RSK Manual – 3rd Version*, dated March 1, 2003.

KGS 2002. Kansas Geological Survey, *Water Well Completion Records (WWC5) Database*, updated June 17, 2002.

LaGrega 1994. M.D. LaGrega et al, *Hazardous Waste Management,* McGraw-Hill, Inc., 1994.

Validata 2003. Kevin Harmon, Validata Chemical Services, Inc., in personal communication with Chad Ferguson, Black & Veatch, October 13, 2003.

Weist 1984. Robert C. Weist, Chemical Rubber Co., *Handbook of Chemistry and Physics*, 65th Edition, Boco Raton, FL, 1984.

Windholz 1983. Martha Windholz ed., *The Merck Index: An Encyclopedia of Chemicals and Drugs*, Ninth Edition, Merck and Co., Rahway, NJ, 1983.

APPENDIX A

BORING LOGS AND MONITORING WELL CONSTRUCTION LOGS

BORING LOG SYMBOLS AND TERMINOLOGY

GENERAL

PP	-Compresive strength as detemined by penetrometer.
TV	-Compressive strength as determined by torvane.
Gravel	-From 1/4 inch to 3 inches in diameter.
Cobble	-From 3 to 12 inches in diameter.
Boulder	-Greater than 12 inches in diameter.
60	-Represents 60 degrees measured from a plane perpendicular to the logitudinal axis of the sample.
Trace	-Represents 0 to 10 percent by volume.
Some	-Represents 10 to 20 percent by volume.
N Value	-Indicates the number of blows to drive a standard split spoon sampler 12 inches with a 140-pound weight falling 30 inches.
RQD	-A modified core run recovery in which all pieces of sound core over 4 inches in length are counted as recovery. The modified sum of the core recovery is then expressed as a percentage of the total length of the core run.
-----	-Dashed line in classification column indicates approximate or gradational change.

WEATHERING

Fresh	-The rock shows no dissolution, loss of strength, or other effects due to weathering (unweathered rock).
Slightly Weathered	-Rock is slightly discolored with a slightly lower strength than unweathered rock.
Moderately Weathered	-Rock is considerably discolored with a slightly lower strength than unweathered rock.
Highly Weathered	-Rock is discolored and weakened so intensely that 2-inch diameter rock cores can be broken readily by hand. Wet strength is usually much lower than dry strength

BEDDING

Laminated	-Less than 0.001 foot to 0.1 foot (0.1 inch).
Thin Bedded	-0.01 foot to 0.1 foot (0.1 to 1.0 inches).
Medium Bedded	-0.1 foot to 1.0 foot (1.2 to 12 inches).
Thick Bedded	-Greater than 1.0 foot.
Massive	-Denotes no discernable internal bedding structure.

SYMBOLS LEGEND

CONCRETE

Clayey SILT

Silty CLAY

GRAVEL

SAND

CLAY (CH)

SILT (MH)

Silty SAND

Water table at boring completion

BLACK & VEATCH

BORING LOG

BORING NO. SP-1

SHEET 1 OF 1

CLIENT	PROJECT	PROJECT NO.
Westar Energy	Arkansas City MGP Site	65541.2010

PROJECT LOCATION	COORDINATES	GROUND ELEVATION (DATUM)	TOTAL DEPTH
Arkansas City, KS	N 749410.03 E 2280262.97	1,081.23 ft (msl)	15.9 (ft)

SURFACE CONDITIONS	DATE START	DATE FINISHED
Gravel driveway north of storage building.	7/9/03	7/9/03

LOGGED BY	CHECKED BY	APPROVED BY
C. Ferguson	C. Ferguson	C. Hirner

SAMPLING							CORING										
SAMPLE TYPE	SAMPLE NUMBER	SET 6 INCHES	2ND 6 INCHES	3RD 6 INCHES	N VALUE	SAMPLE RECOVERY	CORE SIZE	RUN NUMBER	RUN LENGTH	RUN RECOVERY	RQD RECOVERY	PERCENT RECOVERY	RQD	DEPTH (FEET)	SAMPLE TYPE	ELEVATION (FEET)	GRAPHIC LOG
DP	1					2.5'				4.0'				0		1080	
DP	2					3.0'				8.0'				2		1078	
DP	3					2.1'				12.0'				4		1076	
DP	4					2.8'				15.9'				6		1074	
														8		1072	
														10		1070	
														12		1068	
														14		1066	
														16		1064	
														18		1062	
														20		1060	
														22		1058	
														24		1056	
														26		1054	
														28		1052	
														30			

CLASSIFICATION OF MATERIALS	REMARKS
Gravelly SAND; tan to gray; well graded; fine to coarse grained; subangular; dry; w/trace silt; (Fill).	Probe advanced w/2-1/4" OD direct push sampler.
1.6'	
Silty SAND; dark brown; poorly graded; fine grained; moist; w/trace gravel; (Fill).	Hit PVC water line at approximately 3 feet bgs.
4.0'	
Silty SAND; brown; poorly graded; fine grained; subangular; moist; (Alluvium).	Collected soil sample ACSP1S01P from 4.0 to 4.5' for chemical analysis.
	Collected soil sample ACSP1S02P from 8.0 to 8.5' for chemical analysis.
12.0'	
SILT; brown; non-plastic; wet; w/some fine sand; (Alluvium).	PID = 0 PPM throughout probe.
12.4'	
SAND; tan; poorly graded; fine grained; subangular; moist; w/trace silt; (Alluvium). Grades well graded; fine to medium grained; and grayish tan at 12.7'. Grades medium to coarse grained and wet w/some fine gravel at 13.4'.	Sampler refusal at 15.9'.
14.7'	Bottom of probe at 15.9'.
LIMESTONE; tan to gray; highly weathered and fractured; moist; (Nolans Limestone).	Ground water level not recorded.
	Probe backfilled to ground surface w/ bentonite chips on 7/9/03.

9/26/2003 1:31 PM Westar Energy

BLACK & VEATCH

BORING LOG

BORING NO. SP-2

SHEET 1 OF 1

CLIENT	PROJECT	PROJECT NO.
Westar Energy	Arkansas City MGP Site	65541.2010

PROJECT LOCATION	COORDINATES	GROUND ELEVATION (DATUM)	TOTAL DEPTH
Arkansas City, KS	N 749409.29 E 2280238.01	1,080.80 ft (msl)	14.0 (ft)

SURFACE CONDITIONS	DATE START	DATE FINISHED
Gravel drive north of storage building.	7/8/03	7/8/03

LOGGED BY	CHECKED BY	APPROVED BY
C. Ferguson	C. Ferguson	C. Hirner

SAMPLING: SAMPLE TYPE	SAMPLE NUMBER	SET 6 INCHES	2ND 6 INCHES	3RD 6 INCHES	N VALUE	SAMPLE RECOVERY	CORING: CORE SIZE	RUN NUMBER	RUN LENGTH	RUN RECOVERY	RQD RECOVERY	PERCENT RECOVERY	RQD	DEPTH (FEET)	SAMPLE TYPE	ELEVATION (FEET)	GRAPHIC LOG	CLASSIFICATION OF MATERIALS	REMARKS
DP	1					2.2'				4.0'				0		1080		Gravelly SAND; tan; well graded; fine to medium grained; subangular; dry; (Fill).	Probe advanced w/2-1/4" OD direct push sampler. Collected soil sample ACSP2S01P from 1.7 to 2.2' for chemical analysis. Collected soil sample ACSP2S02P from 8.0 to 9.0' for chemical analysis. PID = 0 ppm from 0 to 9.0'. PID = 1.0 ppm at 9.1'. Very slight gasoline odor from 12.2 to 13.9'. PID = 16 ppm at 13.2'. Limestone chips in shoe of DP4 sampler. Sampler refusal at 14.0'. Bottom of probe at 14.0'. Ground water level not recorded. Probe backfilled to ground surface w/ bentonite chips on 7/8/03.
																		0.7'	
														2		1078		Silty SAND; dark brown; poorly graded; fine grained; subangular; dry; w/trace gravel (Fill).	
														4		1076			
																		5.2'	
DP	2					2.5'				8.0'				6		1074		Silty SAND; brown; poorly graded; fine grained; subangular; moist; (Alluvium).	
DP	3					3.3'				12.0'				8		1072			
														10		1070			
																		12.2'	
DP	4					1.9'				14.0'				12		1068		SAND; gray; well graded; fine to medium grained; subangular to rounded; moist; w/trace fine gravel; (Alluvium).	
														14		1066			
														16		1064			
														18		1062			
														20		1060			
														22		1058			
														24		1056			
														26		1054			
														28		1052			
														30					

9/30/2003 8:56 AM Westar Energy

BLACK & VEATCH

BORING LOG

BORING NO. SP-3

SHEET 1 OF 1

CLIENT	PROJECT	PROJECT NO.
Westar Energy	Arkansas City MGP Site	65541.2010

PROJECT LOCATION	COORDINATES	GROUND ELEVATION (DATUM)	TOTAL DEPTH
Arkansas City, KS	N 749420.27 E 2280216.35	1,079.93 ft (msl)	14.5 (ft)

SURFACE CONDITIONS	DATE START	DATE FINISHED
Gravel drive north of storage building.	7/8/03	7/8/03

LOGGED BY	CHECKED BY	APPROVED BY
C. Ferguson	C. Ferguson	C. Hirner

SAMPLING: SAMPLE TYPE	SAMPLE NUMBER	SET 6 INCHES	2ND 6 INCHES	3RD 6 INCHES	N VALUE	SAMPLE RECOVERY	CORING: CORE SIZE	RUN NUMBER	RUN LENGTH	RUN RECOVERY	RQD RECOVERY	PERCENT RECOVERY	RQD	DEPTH (FEET)	SAMPLE TYPE	ELEVATION (FEET)	GRAPHIC LOG	CLASSIFICATION OF MATERIALS	REMARKS
DP	1					2.6'				4.0'				0				Silty SAND; dark brown; poorly graded; fine grained; subangular; dry; w/trace gravel; (Fill). Some cinders from 0.9 to 1.1'. Grades tan from 1.2 to 1.4'.	Probe advanced w/2-1/4" OD direct push sampler. PID = 2.4 ppm at 2.0'.
														2		1078			
														4		1076		4.0'	
DP	2					4.0'				8.0'				6		1074		Silty SAND; brown; poorly graded; fine grained; subangular; dry; (Alluvium).	Collected soil sample ACSP3S01P from 4.0 to 4.6' for chemical analysis. PID = 2 ppm at 5.0'.
														8		1072			
DP	3					3.1'				12.0'				10		1070		9.6' SILT; grayish brown; non-plastic; wet; w/trace fine sand; (Alluvium). 10.6'	Collected soil sample ACSP3S02P from 9.0 to 9.6' for chemical analysis. PID = 5.8 ppm at 9.5'. Slight gasoline odor from 10.6 to 14.5'.
														12		1068		SAND; gray; well graded; fine to medium grained; subangular; moist; w/trace silt (Alluvium).	
DP	4					2.5'				14.5'				14		1066		14.3' LIMESTONE; gray; moderately weathered and slightly fractured; medium bedded; dry; (Nolans Limestone).	PID = 2.4 ppm at 12.5'. Sampler refusal at 14.5'.
														16		1064			Bottom of probe at 14.5'. Ground water level not recorded. Probe backfilled to ground surface w/ bentonite chips on 7/8/03.
														18		1062			
														20		1060			
														22		1058			
														24		1056			
														26		1054			
														28		1052			
														30		1050			

9/26/2003 1:35 PM Westar Energy

BLACK & VEATCH

BORING LOG

BORING NO. SP-4

SHEET 1 OF 1

CLIENT	PROJECT	PROJECT NO.
Westar Energy	Arkansas City MGP Site	65541.2010

PROJECT LOCATION	COORDINATES	GROUND ELEVATION (DATUM)	TOTAL DEPTH
Arkansas City, KS	N 749449.42 E 2280187.98	1,079.21 ft (msl)	13.0 (ft)

SURFACE CONDITIONS	DATE START	DATE FINISHED
Gravel area near SE corner of garage.	7/9/03	7/9/03

LOGGED BY	CHECKED BY	APPROVED BY
C. Ferguson	C. Ferguson	C. Hirner

SAMPLING							CORING									
SAMPLE TYPE	SAMPLE NUMBER	SET 6 INCHES	2ND 6 INCHES	3RD 6 INCHES	N VALUE	SAMPLE RECOVERY	CORE SIZE	RUN NUMBER	RUN LENGTH	RUN RECOVERY	RQD RECOVERY	PERCENT RECOVERY	RQD	DEPTH (FEET)	SAMPLE TYPE	ELEVATION (FEET)	GRAPHIC LOG	CLASSIFICATION OF MATERIALS	REMARKS
DP	1					3.4'				4.0'				0		1078		Silty SAND; dark brown; poorly graded; fine grained; subangular; dry; w/trace gravel; (Fill). Gravel grades out at 0.4'. Grades w/some clay from 0.4' to 0.9'.	Probe advanced w/2-1/4" OD direct push sampler. Collected soil sample ACSP4S01P from 2.0 to 2.8' for chemical analysis. Collected soil sample ACSP4S02P from 8.6 to 9.3' for chemical analysis. PID = 0 ppm throughout probe. Sampler refusal at 13.0'.
														2		1076			
														4		1074		4.0' Silty SAND; light brown to tan; poorly graded; fine grained; subangular; dry; (Alluvium).	
DP	2					3.1'				8.0'				6		1072		Grades tan at 6.9'.	
														8		1070			
DP	3					2.9'				12.0'				10		1068		Wet silt lens from 9.5 to 9.8'. 10.0' SAND; tan; well graded; fine to medium grained; subangular; moist; (Alluvium). Grades fine to coarse grained w/trace fine gravel at 10.6'.	
DP	4					0.9'				13.0'				12		1066		Grades medium to coarse grained and gravel grades to some at 12.6'. 12.7' LIMESTONE; tan to gray; extremely weathered and fractured; moist; (Nolans Limestone).	Bottom of probe at 13.0'. Ground water level not recorded. Probe backfilled to ground surface w/ bentonite chips on 7/9/03.
														14		1064			
														16		1062			
														18		1060			
														20		1058			
														22		1056			
														24		1054			
														26		1052			
														28		1050			
														30					

9/26/2003 1:36 PM Westar Energy

BLACK & VEATCH

BORING LOG

BORING NO. SP-5

SHEET 1 OF 1

CLIENT	PROJECT	PROJECT NO.
Westar Energy	Arkansas City MGP Site	65541.2010

PROJECT LOCATION	COORDINATES	GROUND ELEVATION (DATUM)	TOTAL DEPTH
Arkansas City, KS	N 749322.58 E 2280238.26	1,080.04 ft (msl)	15.0 (ft)

SURFACE CONDITIONS	DATE START	DATE FINISHED
Grass lot south of storage building.	7/7/03	7/7/03

LOGGED BY	CHECKED BY	APPROVED BY
C. Ferguson	C. Ferguson	C. Hirner

SAMPLING: SAMPLE TYPE	SAMPLE NUMBER	SET 6 INCHES	2ND 6 INCHES	3RD 6 INCHES	N VALUE	SAMPLE RECOVERY	CORING: CORE SIZE	RUN NUMBER	RUN LENGTH	RUN RECOVERY	RQD RECOVERY	PERCENT RECOVERY	RQD	DEPTH (FEET)	SAMPLE TYPE	ELEVATION (FEET)	GRAPHIC LOG	CLASSIFICATION OF MATERIALS	REMARKS
DP	1					2.9'				4.0'				0		1080		SILT; dark brown; non-plastic; dry; w/some sand; (Fill). Cinders from 1.1 to 1.4'.	Probe advanced w/2" OD direct push sampler. Collected soil sample ACSP5S01P from 1.0 to 4.5' for chemical analysis. Collected soil sample ACSP5S02P from 6.5 to 9.0' for chemical analysis. Sampler refusal at 15.0'. PID = 0 ppm throughout boring.
														2		1078			
														4		1076		4.0'	
DP	2					3.7'				8.0'				6		1074		SAND; reddish brown; poorly graded; fine grained; subangular; dry; w/trace silt; (Alluvium).	
														8		1072			
DP	3					3.6'				12.0'				10		1070		Clay lens from 9.6 to 9.9'. Grades tan at 10.2'. Thin bedding visible from 10.5' to 11.0'. Grades well graded and medium to coarse grained at 11.0'.	
														12		1068			
DP	4					2.3'				15.0'				14		1066		Grades wet at 13.8'. Grades w/trace fine gravel at 14.1'.	
																		14.8'	
														16		1064		LIMESTONE; dark gray; slightly weathered; medium bedded; dry; (Nolans Limestone).	Bottom of probe at 15.0' Ground water level not recorded. Probe backfilled to ground surface w/ bentonite chips on 7/7/03.
														18		1062			
														20		1060			
														22		1058			
														24		1056			
														26		1054			
														28		1052			
														30					

9/26/2003 1:46 PM Westar Energy

BLACK & VEATCH

BORING LOG

BORING NO. SP-6

SHEET 1 OF 1

CLIENT	PROJECT	PROJECT NO.
Westar Energy	Arkansas City MGP Site	65541.2010

PROJECT LOCATION	COORDINATES	GROUND ELEVATION (DATUM)	TOTAL DEPTH
Arkansas City, KS	N 749343.41 E 2280184.19	1,080.86 ft (msl)	16.0 (ft)

SURFACE CONDITIONS	DATE START	DATE FINISHED
Gravel area southwest of storage building.	7/8/03	7/8/03

LOGGED BY	CHECKED BY	APPROVED BY
C. Ferguson	C. Ferguson	C. Hirner

SAMPLING: SAMPLE TYPE	SAMPLE NUMBER	SET 6 INCHES	2ND 6 INCHES	3RD 6 INCHES	N VALUE	SAMPLE RECOVERY	CORING: CORE SIZE	RUN NUMBER	RUN LENGTH	RUN RECOVERY	RQD RECOVERY	PERCENT RECOVERY	RQD	DEPTH (FEET)	SAMPLE TYPE	ELEVATION (FEET)	GRAPHIC LOG	CLASSIFICATION OF MATERIALS	REMARKS
DP	1					2.6'				4.0'				0		1080		Silty SAND; brown; well graded; fine to medium grained; subangular; dry; w/trace gravel; (Fill). Cinders from 1.1 to 1.3'. Brick from 2.4 to 2.6'.	Probe advanced w/2-1/4" OD direct push sampler. Collected soil sample ACSP6S01P from 2.2to 5.0' for chemical analysis. PID = 0 ppm from 0 to 8'. Tar odor and sheen on water in DP-3 and DP-4 samplers from 9.2 to 13.2'. PID = 150 ppm at 9.5'. Collected soil sample ACSP6S02P from 12.0 to 12.6' for chemical analysis. Slight gasoline odor from 13.2 to 14.5'. PID = 2 ppm at 13.5'. Sampler refusal at 16.0'. Bottom of probe at 16.0'. Ground water level not recorded. Probe backfilled to ground surface w/ bentonite chips on 7/8/03.
DP	2					2.2'				8.0'				2		1078			
DP	3					1.5'				12.0'				4		1076		1/2" sand layer at 4.6'. Brick at 4.7'. Cinders at 4.8'. Brick from 5.5 to 5.9'. Light tan gravel from 5.9 to 6.2'.	
DP	4					2.5'				16.0'				6		1074			
														8		1072		8.0'	
														10		1070		SLAG; tan; wet; w/some cinders; (Fill). Grades tar coated at 9.2'.	
														12		1068		13.2'	
														14		1066		SAND; tan; poorly graded; fine grained; subangular; moist/ w/trace silt; (Alluvium). Grades wet w/trace bedding at 13.7'.	
														16		1064			
														18		1062			
														20		1060			
														22		1058			
														24		1056			
														26		1054			
														28		1052			
														30					

9/26/2003 1:49 PM Westar Energy

BLACK & VEATCH

BORING LOG

BORING NO. SP-7

SHEET 1 OF 1

CLIENT	PROJECT	PROJECT NO.
Westar Energy	Arkansas City MGP Site	65541.2010

PROJECT LOCATION	COORDINATES	GROUND ELEVATION (DATUM)	TOTAL DEPTH
Arkansas City, KS	N 749356.22 E 2280136.71	1,078.25 ft (msl)	13.8 (ft)

SURFACE CONDITIONS	DATE START	DATE FINISHED
Shallow surface depression southwest of storage building.	7/8/03	7/8/03

LOGGED BY	CHECKED BY	APPROVED BY
C. Ferguson	C. Ferguson	C. Hirner

SAMPLING: SAMPLE TYPE	SAMPLE NUMBER	SET 6 INCHES	2ND 6 INCHES	3RD 6 INCHES	N VALUE	SAMPLE RECOVERY	CORING: CORE SIZE	RUN NUMBER	RUN LENGTH	RUN RECOVERY	RQD RECOVERY	PERCENT RECOVERY	RQD	DEPTH (FEET)	SAMPLE TYPE	ELEVATION (FEET)	GRAPHIC LOG	CLASSIFICATION OF MATERIALS	REMARKS
DP	1					2.1'				4.0'				0		1078		Sandy GRAVEL; tan; well graded; fine to coarse grained; rounded; dry; w/trace silt; (Fill).	Probe advanced w/2-1/4" OD direct push sampler. Collected soil sample ACSP7SS1S01P from 0 to 0.5' for chemical analysis. Collected soil sample ACSP7S01P from 4.0 to 5.1' for chemical analysis. Collected soil sample ACSP7S02P from 8.0 to 9.0' for chemical analysis. Sampler refusal at 13.8'. PID = 0 ppm throughout probe. Bottom of probe at 13.8'. Ground water level not recorded. Boring backfilled to ground surface w/ bentonite chips on 7/8/03.
																		0.8' Sandy SILT; brown; non-plastic; dry; w/trace fine gravel; (Fill). Brick fragments from 1.6 to 1.8'. Cinders, coal, and slag from 1.8 to 2.1'.	
														2		1076			
														4		1074		4.0' Silty SAND; brown; poorly graded; fine grained; subangular; moist; (Alluvium).	
														6		1072			
														8		1070			
DP	3					2.0'				12.0'				10		1068		9.8' Silty CLAY; brown; low plasticity; moist; (Alluvium).	
														12		1066		12.0'	
DP	4					1.8'				13.8'								SILT; grayish tan; non-plastic; moist; w/trace clay; (Alluvium).	
														14		1064		13.6' LIMESTONE; gray; moderately weathered; highly fractured; dry; (Nolans Limestone).	
														16		1062			
														18		1060			
														20		1058			
														22		1056			
														24		1054			
														26		1052			
														28		1050			
														30					

9/26/2003 1:51 PM Westar Energy

BLACK & VEATCH

BORING LOG

BORING NO. SP-8

SHEET 1 OF 1

CLIENT	PROJECT	PROJECT NO.
Westar Energy	Arkansas City MGP Site	65541.2010

PROJECT LOCATION	COORDINATES	GROUND ELEVATION (DATUM)	TOTAL DEPTH
Arkansas City, KS	N 749417.31 E 2280037.89	1,077.16 ft (msl)	14.8 (ft)

SURFACE CONDITIONS	DATE START	DATE FINISHED
Gravel area southwest of garage.	7/8/03	7/8/03

LOGGED BY	CHECKED BY	APPROVED BY
C. Ferguson	C. Ferguson	C. Hirner

SAMPLING: SAMPLE TYPE	SAMPLE NUMBER	SET 6 INCHES	2ND 6 INCHES	3RD 6 INCHES	N VALUE	SAMPLE RECOVERY	CORING: CORE SIZE	RUN NUMBER	RUN LENGTH	RUN RECOVERY	RQD RECOVERY	PERCENT RECOVERY	RQD	DEPTH (FEET)	SAMPLE TYPE	ELEVATION (FEET)	GRAPHIC LOG	CLASSIFICATION OF MATERIALS	REMARKS
DP	1					2.6'				4.0'				0		1076		SILT; dark brown; non-plastic; moist; w/some sand; (Fill).	Probe advanced w/2-1/4" OD direct push sampler.
														2		1074		Wet from 2.0 to 2.3'.	Collected soil sample ACSP8SS1S01P from 0 to 0.5' for chemical analysis.
														4				4.0'	
DP	2					2.0'				8.0'				6		1072		Silty SAND; brown; poorly graded; fine grained; subangular; moist; (Alluvium).	Collected soil sampler ACSP8S01P from 4.0 to 4.5' for chemical analysis.
														8		1070			
																1068		9.0'	
DP	3					2.8'				12.0'				10		1066		SILT; tan; non-plastic; moist; w/trace fine sand; (Alluvium) . Grades wet at 9.5'.	Collected soil sample ACSP8S02P from 8.0 to 8.5' for chemical analysis.
														12		1064		13.1'	PID = 0 ppm throughout probe.
DP	4					2.2'				14.8'				14				SAND; brown; well graded; fine to medium grained; subangular; dry; w/trace silt (Alluvium).	
																1062		14.0'	
														16		1060		LIMESTONE; dark gray to gray; highly weathered; dry; (Nolans Limestone).	Bottom of probe at 14.8'. Ground water level not recorded. Probe backfilled to ground surface w/ bentonite chips on 7/8/03.
														18		1058			
														20		1056			
														22		1054			
														24		1052			
														26		1050			
														28		1048			
														30					

9/26/2003 1:52 PM Westar Energy

BLACK & VEATCH

BORING LOG

BORING NO. SP-9

SHEET 1 OF 1

CLIENT	PROJECT	PROJECT NO.
Westar Energy	Arkansas City MGP Site	65541.2010

PROJECT LOCATION	COORDINATES	GROUND ELEVATION (DATUM)	TOTAL DEPTH
Arkansas City, KS	N 749457.271 E 2280045.93	1,077.79 ft (msl)	14.2 (ft)

SURFACE CONDITIONS	DATE START	DATE FINISHED
Concrete slab west of garage.	7/8/03	7/8/03

LOGGED BY	CHECKED BY	APPROVED BY
C. Ferguson	C. Ferguson	C. Hirner

SAMPLING							CORING										
SAMPLE TYPE	SAMPLE NUMBER	SET 6 INCHES	2ND 6 INCHES	3RD 6 INCHES	N VALUE	SAMPLE RECOVERY	CORE SIZE	RUN NUMBER	RUN LENGTH	RUN RECOVERY	RQD RECOVERY	PERCENT RECOVERY	RQD	DEPTH (FEET)	SAMPLE TYPE	ELEVATION (FEET)	GRAPHIC LOG	CLASSIFICATION OF MATERIALS	REMARKS
DP	1		4.0'			3.2'								0				CONCRETE. 0.5'	Probe advanced w/2-1/4" OD direct push sampler after using concrete bit at surface. Collected soil sample ACSP9S01P from 1.5 to 2.6' for chemical analysis. Collected soil sample ACSP9S02P from 7.3 to 8.5' for chemical analysis. PID = 0 ppm throughout probe. Sampler refusal at 14.2'.
														2		1076		SAND; tan, well graded; fine to medium grained; subangular; dry; (Fill). 1.9'	
DP	2		8.0'			3.2'								4		1074		Silty SAND; dark brown; poorly graded; fine grained; subangular; dry; (Alluvium).	
														6		1072			
DP	3		12.0'			3.6'								8		1070			
														10		1068		SILT; tan; non-plastic; wet; (Alluvium). 9.4' Thinly bedded clay lens at 10.8'.	
DP	4		14.2'			2.2'								12		1066		Clay lens from 12.7 to 12.9'.	
														14		1064		14.0' LIMESTONE; tan to gray; extremely weathered and fractured; dry; (Nolans Limestone).	Bottom of probe at 14.2'. Ground water level not recorded. Probe backfilled to ground surface w/ bentonite chips on 7/8/03.
														16		1062			
														18		1060			
														20		1058			
														22		1056			
														24		1054			
														26		1052			
														28		1050			
														30		1048			

9/26/2003 1:52 PM Westar Energy

BLACK & VEATCH

BORING LOG

BORING NO. SP-10

SHEET 1 OF 1

CLIENT	PROJECT	PROJECT NO.
Westar Energy	Arkansas City MGP Site	65541.2010

PROJECT LOCATION	COORDINATES	GROUND ELEVATION (DATUM)	TOTAL DEPTH
Arkansas City, KS	N 749447.59 E 2280085.27	1,078.57 ft (msl)	13.0 (ft)

SURFACE CONDITIONS	DATE START	DATE FINISHED
Gravel parking area south of garage.	7/8/03	7/8/03

LOGGED BY	CHECKED BY	APPROVED BY
C. Ferguson	C. Ferguson	C. Hirner

SAMPLING: SAMPLE TYPE	SAMPLE NUMBER	SET 6 INCHES	2ND 6 INCHES	3RD 6 INCHES	N VALUE	SAMPLE RECOVERY
CORING: CORE SIZE	RUN NUMBER	RUN LENGTH	RUN RECOVERY	RQD RECOVERY	PERCENT RECOVERY	RQD
DP	1		4.0'			3.0'
DP	2		8.0'			3.6'
DP	3		12.0'			4.0'
DP	4		13.0'			1.0'

DEPTH (FEET)	SAMPLE TYPE	ELEVATION (FEET)	GRAPHIC LOG	CLASSIFICATION OF MATERIALS	REMARKS
0		1078		SILT; dark brown; non-plastic; dry; w/trace fine sand and gravel; (Fill).	Probe advanced w/2-1/4" OD direct push sampler.
2		1076		Grades w/trace cinders from 2.1 to 2.4'.	Collected soil sample ACSP10SS1S01P from 0 to 0.5' for chemical analysis.
4		1074		4.0' Silty SAND; light brown; poorly graded; fine grained; subangular; moist; (Alluvium).	Collected soil sample ACSP10S01P from 2.0 to 2.8' for chemical analysis.
6		1072			PID = 0 ppm throughout probe.
8		1070			Collected soil sample ACSP10S01P from 6.5 to 7.2' for chemical analysis.
10		1068		9.6' SILT; grayish-tan; non-plastic; moist; w/trace fine sand; (Alluvium). Grades wet at 11.1'.	PID = 0 ppm throughout probe.
12		1066		12.9' LIMESTONE; reddish brown to gray; extremely weathered and fractured; dry; (Nolans Limestone).	Sampler refusal at 13.0'.
14		1064			Bottom of probe at 13.0'.
16		1062			Ground water level not recorded.
18		1060			Probe backfilled to ground surface w/ bentonite chips on 7/8/03.
20		1058			
22		1056			
24		1054			
26		1052			
28		1050			
30					

9/26/2003 1:54 PM Westar Energy

BLACK & VEATCH

BORING LOG

BORING NO. SP-11

CLIENT	PROJECT	PROJECT NO.
Westar Energy	Arkansas City MGP Site	65541.2010

PROJECT LOCATION	COORDINATES	GROUND ELEVATION (DATUM)	TOTAL DEPTH
Arkansas City, KS	N 749447.01 E 2280130.73	1,078.84 ft (msl)	21.0 (ft)

SURFACE CONDITIONS	DATE START	DATE FINISHED
Gravel parking area south of garage.	7/8/03	7/8/03

LOGGED BY	CHECKED BY	APPROVED BY
C. Ferguson	C. Ferguson	C. Hirner

SAMPLING: SAMPLE TYPE, SAMPLE NUMBER, SET 6 INCHES, 2ND 6 INCHES, 3RD 6 INCHES, N VALUE, SAMPLE RECOVERY

CORING: CORE SIZE, RUN NUMBER, RUN LENGTH, RUN RECOVERY, RQD RECOVERY, PERCENT RECOVERY, RQD

SAMPLE TYPE	SAMPLE NUMBER	SET 6 INCHES	2ND 6 INCHES	3RD 6 INCHES	N VALUE	SAMPLE RECOVERY	DEPTH (FEET)	ELEVATION (FEET)	CLASSIFICATION OF MATERIALS	REMARKS
DP	1		4.0'			2.7'	0–2.0'	1078–1076	SILT; brown; non-plastic; dry; w/trace sand and fine gravel; (Fill). Cinders from 1.4 to 1.7'.	Probe advanced w/2-1/4" OD direct push sampler. Collected soil sample ACSP11S01P from 1.9 to 2.7' for chemical analysis. Collected soil sample ACSP11S02P from 8.0 to 8.6' for chemical analysis. Sampler refusal at 21.0' PID = 0 ppm throughout probe.
DP	2		8.0'			3.2'	2.0'–9.0'	1076–1070	Silty SAND; brown; poorly graded; fine grained; subangular; dry; (Alluvium).	
DP	3		12.0'			3.4'	9.0'–13.5'	1070–1066	SILT; brown; non-plastic; moist; w/trace clay; (Alluvium). Grades grayish tan; wet; and clay grades out at 10.2'.	
DP	4		16.0'			2.6'	13.5'–16.0'	1066–1062	CLAY; gray; low plasticity; moist; (Residual Limestone).	
DP	5		20.0'			1.4'	16.0'–20.9'	1062–1058	SILT; grayish tan; non-plastic; wet; extremely soft (Alluvium). Thinly bedded sand lenses at 16.6' and 17.1', and from 20.8' to 21.0'. Thinly bedded gravel lenses at 17.2' and 20.5'.	
DP	6		21.0'			1.0'	20.9'–21.0'	1058–1056	LIMESTONE; reddish-tan; extremely weathered; wet; (Nolans Limestone).	Bottom of probe at 21.0'. Ground water level not recorded. Probe backfilled to ground surface w/ bentonite chips on 7/8/03.

Depth scale: 0, 2, 4, 6, 8, 10, 12, 14, 16, 18, 20, 22, 24, 26, 28, 30

Elevation scale: 1078, 1076, 1074, 1072, 1070, 1068, 1066, 1064, 1062, 1060, 1058, 1056, 1054, 1052, 1050

9/26/2003 1:57 PM Westar Energy

BLACK & VEATCH

BORING LOG

BORING NO. SP-12

SHEET 1 OF 1

CLIENT	PROJECT	PROJECT NO.
Westar Energy	Arkansas City MGP Site	65541.2010

PROJECT LOCATION	COORDINATES	GROUND ELEVATION (DATUM)	TOTAL DEPTH
Arkansas City, KS	N 749448.23 E 2280251.42	1,081.26 ft (msl)	16.0 (ft)

SURFACE CONDITIONS	DATE START	DATE FINISHED
Grass area north of the storage building.	7/8/03	7/8/03

LOGGED BY	CHECKED BY	APPROVED BY
C. Ferguson	C. Ferguson	C. Hirner

SAMPLING: SAMPLE TYPE	SAMPLE NUMBER	SET 6 INCHES	2ND 6 INCHES	3RD 6 INCHES	N VALUE	SAMPLE RECOVERY
CORING: CORE SIZE	RUN NUMBER	RUN LENGTH	RUN RECOVERY	RQD RECOVERY	PERCENT RECOVERY	RQD
DP	1		4.0'			1.5'
DP	2		8.0'			2.2'
DP	3		12.0'			3.0'
DP	4		16.0'			2.8'

DEPTH (FEET)	ELEVATION (FEET)	GRAPHIC LOG	CLASSIFICATION OF MATERIALS	REMARKS
0	1080		Silty SAND; brown; well graded; fine to medium grained; subangular; moist; (Fill).	Probe advanced w/2-1/4" OD direct push sampler. Collected sample ACSP12S01P from 0.5 to 1.5' for chemical analysis. Gravel depths in DP-1 sampler were based on sampler resistance during probing. Collected soil sample ACSP12S02P from 8.0 to 8.8' for chemical analysis. PID = 0 ppm throughout probe.
2			2.0'	
	1078		Limestone GRAVEL; gray; well graded; medium to coarse grained; angular; dry; w/some sand; (Fill).	
4			4.0'	
	1076		Silty SAND; brown; poorly graded; fine grained; subangular; dry; (Alluvium).	
6	1074			
8				
	1072			
10			10.1'	
	1070		SAND; tan; well graded; fine to medium grained; dry w/trace bedding.	
12			Bedding grades out at 12.5'.	
	1068			
14			14.0'	
	1066		Sandy GRAVEL; tan; well graded; fine to medium grained; rounded; wet; (Alluvium).	
16	1064			Bottom of probe at 16.0'. Ground water level not recorded. Probe backfilled to ground surface w/ bentonite chips on 7/8/03.
18				
	1062			
20	1060			
22				
	1058			
24	1056			
26				
	1054			
28				
	1052			
30				

9/26/2003 1:59 PM Westar Energy

BLACK & VEATCH

BORING LOG

BORING NO. SP-13

CLIENT	PROJECT	PROJECT NO.
Westar Energy	Arkansas City MGP Site	65541.2010

PROJECT LOCATION	COORDINATES	GROUND ELEVATION (DATUM)	TOTAL DEPTH
Arkansas City, KS	N 749394.30 E 2280063.99	1,077.27 ft (msl)	14.3 (ft)

SURFACE CONDITIONS	DATE START	DATE FINISHED
Gravel area south of garage.	7/8/03	7/8/03

LOGGED BY	CHECKED BY	APPROVED BY
C. Ferguson	C. Ferguson	C. Hirner

SAMPLING: SAMPLE TYPE, SAMPLE NUMBER, SET 6 INCHES, 2ND 6 INCHES, 3RD 6 INCHES, N VALUE, SAMPLE RECOVERY

CORING: CORE SIZE, RUN NUMBER, RUN LENGTH, RUN RECOVERY, RQD RECOVERY, PERCENT RECOVERY, RQD

SAMPLE TYPE	SAMPLE NUMBER	SET 6 INCHES	2ND 6 INCHES	3RD 6 INCHES	N VALUE	SAMPLE RECOVERY	DEPTH (FEET)	ELEVATION (FEET)	CLASSIFICATION OF MATERIALS	REMARKS
DP	1		4.0'			3.3'	0–4	1076, 1074	SAND; light brown; well graded; fine to medium grained; subangular; dry; w/trace silt and fine gravel; (Fill). W/some cinders from 0.4 to 0.6'. Gravel grades out at 0.8'. Grades dark brown at 1.9'.	Probe advanced w/2-1/4" OD direct push sampler. Collected soil sample ACSP13S01P from 2.2 to 3.0' for chemical analysis.
DP	2		8.0'			3.4'	4–8	1072, 1070	Silty SAND; brown; poorly graded; fine grained; subangular; dry; (Alluvium)	Collected soil sample ACSP13S02P from 6.8 to 7.3' for chemical analysis.
DP	3		12.0'			3.3'	8–12	1068, 1066	SILT; grayish tan; non-plastic; moist; (Alluvium). Grades wet at 9.1'.	Very faint gasoline odor from 13.0 to 13.2'. PID = 0 ppm throughout probe.
DP	4		14.3'			2.1'	12–14	1064	SAND; dark gray; poorly graded; fine grained; subangular; wet; w/trace silt; (Alluvium).	Sampler refusal at 14.3'.
							14–30	1062, 1060, 1058, 1056, 1054, 1052, 1050, 1048	LIMESTONE; tannish gray; moderately weathered; medium bedded; dry; (Nolans Limestone).	Bottom of probe at 14.3'. Ground water level not recorded. Probe backfilled to ground surface w/ bentonite chips on 7/8/03.

9/26/2003 2:00 PM Westar Energy

BLACK & VEATCH

BORING LOG

BORING NO. SP-14

SHEET 1 OF 1

CLIENT	PROJECT	PROJECT NO.
Westar Energy	Arkansas City MGP Site	65541.2010

PROJECT LOCATION	COORDINATES	GROUND ELEVATION (DATUM)	TOTAL DEPTH
Arkansas City, KS	N 749400.27 E 2280108.23	1,077.85 ft (msl)	12.8 (ft)

SURFACE CONDITIONS	DATE START	DATE FINISHED
Gravel area south of garage.	7/8/03	7/8/03

LOGGED BY	CHECKED BY	APPROVED BY
C. Ferguson	C. Ferguson	C. Hirner

SAMPLING							CORING										
SAMPLE TYPE	SAMPLE NUMBER	SET 6 INCHES	2ND 6 INCHES	3RD 6 INCHES	N VALUE	SAMPLE RECOVERY	CORE SIZE	RUN NUMBER	RUN LENGTH	RUN RECOVERY	RQD RECOVERY	PERCENT RECOVERY	RQD	DEPTH (FEET)	SAMPLE TYPE	ELEVATION (FEET)	GRAPHIC LOG	CLASSIFICATION OF MATERIALS	REMARKS
DP	1					2.7'				4.0'				0				Sandy GRAVEL; tan to gray; well graded; fine to medium grained; subangular; dry; (Fill).	Probe advanced w/2-1/4" OD direct push sampler. Collected soil sample ACSP14S01P from 2.1 to 2.7' for chemical analysis. Collected soil sample ACSP14S02P from 8.0 to 9.0' for chemical analysis. Sampler refusal at 12.8'. PID = 0 ppm throughout probe.
														0.8'					
														2		1076		Silty SAND; brown; poorly graded; fine grained; dry; (Alluvium).	
														4		1074			
DP	2					3.4'				8.0'				6		1072			
														8		1070		Grades moist at 7.2'.	
DP	3					3.0'				12.0'				10		1068		Clay lens from 9.7 to 10.1'.	
																		SILT; grayish tan; non-plastic; wet; (Alluvium).	
														12		1066			
DP	4					0.8'				12.8'				12.5'				LIMESTONE; gray to tan; extremely weathered and fractured; dry; (Nolans Limestone).	Bottom of probe at 12.8'. Ground water level not recorded. Probe backfilled to ground surface w/ bentonite chips on 7/8/03.
														14		1064			
														16		1062			
														18		1060			
														20		1058			
														22		1056			
														24		1054			
														26		1052			
														28		1050			
														30		1048			

9/26/2003 2:01 PM Westar Energy

BLACK & VEATCH

BORING LOG

BORING NO. SP-15

SHEET 1 OF 1

CLIENT	PROJECT	PROJECT NO.
Westar Energy	Arkansas City MGP Site	65541.2010

PROJECT LOCATION	COORDINATES	GROUND ELEVATION (DATUM)	TOTAL DEPTH
Arkansas City, KS	N 749403.02 E 2280157.47	1,078.24 ft (msl)	23.8 (ft)

SURFACE CONDITIONS	DATE START	DATE FINISHED
Gravel area west of storage building.	7/8/03	7/8/03

LOGGED BY	CHECKED BY	APPROVED BY
C. Ferguson	C. Ferguson	C. Hirner

SAMPLING: SAMPLE TYPE	SAMPLE NUMBER	SET 6 INCHES	2ND 6 INCHES	3RD 6 INCHES	N VALUE	SAMPLE RECOVERY	CORING: CORE SIZE	RUN NUMBER	RUN LENGTH	RUN RECOVERY	RQD RECOVERY	PERCENT RECOVERY	RQD	DEPTH (FEET)	SAMPLE TYPE	ELEVATION (FEET)	GRAPHIC LOG	CLASSIFICATION OF MATERIALS	REMARKS
DP	1					3.5'				4.0'				0		1078		Silty SAND; brown; poorly graded; fine grained; subangular; dry; (Fill).	Probe advanced w/2-1/4" OD direct push sampler.
														2		1076		Grades dark brown and moist at 1.9'.	Collected soil sample ACSP15S01P from 2.5 to 3.5' for chemical analysis.
														4		1074		4.4'	
DP	2					2.0'				8.0'				6		1072		SAND; brown; poorly graded; fine grained; subangular; moist; w/trace silt; (Alluvium).	
														8		1070			Collected soil sample ACSP15S02P from 8.0 to 9.0' for chemical analysis.
DP	3					3.7'				12.0'				10		1068		Clay lens from 9.8 to 10.1'.	
																		10.1' SILT; grayish tan; non-plastic; wet; (Alluvium).	
														12		1066		12.6'	
DP	4					1.9'				16.0'				14		1064		Gravelly SAND; tan; well graded; fine to coarse grained; rounded; wet; (Alluvium). Grades dark gray and fine to medium grained at 13.0'.	PID = 0 ppm from 0' to 12.5'. PID = 10 ppm at 12.8'. PID = 250 ppm at 13.3'. Heavy gasoline odor from 13.0' to approximately 17.4'. PID = 40 ppm at 17.0'.
														16		1062		Grades reddish tan at approximately 16.0'.	
DP	5					1.4'				20.0'				18		1060			
														20		1058			PID = 0 ppm from 20.0' to 23.8'. Sampler refusal at 23.8'.
DP	6					1.2'				23.8'				22		1056		22.5'	
																		LIMESTONE; gray; extremely weathered and fractured; wet; (Nolans Limestone).	
														24		1054			Bottom of probe at 23.8'. Ground water level not recorded. Probe backfilled to ground surface w/ bentonite chips on 7/8/03.
														26		1052			
														28		1050			
														30					

9/26/2003 2:02 PM Westar Energy

BLACK & VEATCH

BORING LOG

BORING NO. SP-16

SHEET 1 OF 1

CLIENT	PROJECT	PROJECT NO.
Westar Energy	Arkansas City MGP Site	65541.2010

PROJECT LOCATION	COORDINATES	GROUND ELEVATION (DATUM)	TOTAL DEPTH
Arkansas City, KS	N 749353.80' E 2280083.67	1,077.26 ft (msl)	14.5 (ft)

SURFACE CONDITIONS	DATE START	DATE FINISHED
Gravel covered storage area south of garage.	7/9/03	7/9/03

LOGGED BY	CHECKED BY	APPROVED BY
C. Ferguson	C. Ferguson	C. Hirner

SAMPLING							CORING										
SAMPLE TYPE	SAMPLE NUMBER	SET 6 INCHES	2ND 6 INCHES	3RD 6 INCHES	N VALUE	SAMPLE RECOVERY	CORE SIZE	RUN NUMBER	RUN LENGTH	RUN RECOVERY	RQD RECOVERY	PERCENT RECOVERY	RQD	DEPTH (FEET)	SAMPLE TYPE	ELEVATION (FEET)	GRAPHIC LOG
DP	1					3.1'				4.0'				0		1076	
														2			
																1074	
														4			
DP	2					3.3'				8.0'						1072	
														6			
																1070	
														8			
DP	3					2.5'				12.0'						1068	
														10			
																1066	
														12			
DP	4					2.1'				14.5'						1064	
														14			
																1062	
														16			
																1060	
														18			
																1058	
														20			
																1056	
														22			
																1054	
														24			
																1052	
														26			
																1050	
														28			
																1048	
														30			

CLASSIFICATION OF MATERIALS

Silty SAND; brown; poorly graded; fine grained; subangular; dry; w/some fine gravel; (Fill).
W/some clay from 0.6' to 1.2'.

Grades moist at 2.8'.

4.7'

Silty SAND; dark brown; poorly graded; fine grained; subangular; moist; (Alluvium).

W/trace clay from 9.7 to 10.1'.
Grades grayish brown and wet at 10.1'.

Thinly bedded silt lenses from 13.1 to 13.4'.

13.4'

SAND; dark gray; poorly graded; fine grained; subangular; wet, w/trace silt; (Alluvium).

14.2'

LIMESTONE; gray; highly weathered and fractured; dry; (Nolans Limestone).

REMARKS

Probe advanced w/2-1/4" OD direct push sampler.
Collected soil sample ACSP16SS1S01P from 0 to 0.5' for chemical analysis.
Collected soil sample ACSP16S01P from 2.0 to 2.8' for chemical analysis.
Collected soil sample ACSP16S02P from 8.5 to 9.8' for chemical analysis.
PID = 0 ppm from 0' to 10.5'.
Very faint gasoline odor from 10.1' to 10.5'.
PID = 50 ppm at 12.5'.
PID = 864 ppm at 13.0'.
Very heavy gasoline odor from 13.4' to 14.2'.
PID = 1,534 ppm at 13.7'.
Sampler refusal at 14.5'.
Bottom of probe at 14.5'.
Ground water level not recorded.
Probe backfilled to ground surface w/ bentonite chips on 7/9/03.

9/26/2003 2:04 PM Westar Energy

BLACK & VEATCH

BORING LOG

BORING NO. SP-17

SHEET 1 OF 1

CLIENT	PROJECT	PROJECT NO.
Westar Energy	Arkansas City MGP Site	65541.2010

PROJECT LOCATION	COORDINATES	GROUND ELEVATION (DATUM)	TOTAL DEPTH
Arkansas City, KS	N 749319.23 E 2280163.49	1,079.38 ft (msl)	15.0 (ft)

SURFACE CONDITIONS	DATE START	DATE FINISHED
Grass area south of MGP site.	7/7/03	7/7/03

LOGGED BY	CHECKED BY	APPROVED BY
C. Ferguson	C. Ferguson	C. Hirner

SAMPLING: SAMPLE TYPE	SAMPLE NUMBER	SET 6 INCHES	2ND 6 INCHES	3RD 6 INCHES	N VALUE	SAMPLE RECOVERY	CORING: CORE SIZE	RUN NUMBER	RUN LENGTH	RUN RECOVERY	RQD RECOVERY	PERCENT RECOVERY	RQD	DEPTH (FEET)	SAMPLE TYPE	ELEVATION (FEET)	GRAPHIC LOG	CLASSIFICATION OF MATERIALS	REMARKS
DP	1					2.5'				4.0'				0		1078		SILT; reddish brown; non-plastic; dry; w/some cinders and slag; (Fill).	Probe advanced w/2-1/4" OD direct push sampler. Collected soil sample ACSP17SS1S01P from 0 to 0.5' for chemical analysis. Collected soil sample ACSP17S01P from 1.2 to 2.5' for chemical analysis. Collected soil sample ACSP17S02P from 6.0 to 7.4' for chemical analysis. Sampler refusal at 15.0'. PID = 0 ppm throughout probe. Bottom of probe at 15.0'. Ground water level not recorded. Probe backfilled to ground surface w/ bentonite chips on 7/7/03.
														2				Grades thinly bedded; moist; w/some clay at 1.4'.	
																1076		Clay and bedding grade out at 2.2' and grades yellowish brown.	
														4				4.0'	
DP	2					3.4'				8.0'						1074		SILT; brown; non-plastic; dry; w/trace fine sand; (Alluvium) .	
														6		1072			
														8				8.0'	
DP	3					3.3'				12.0'						1070		SAND; brown; poorly graded; fine grained; subangular; dry; w/some silt; (Alluvium).	
														10		1068		Grades brownish gray and wet at 10.8'.	
														12				Grades moist at approximately 12'.	
DP	4					2.5'				15.0'						1066		Clay lens from 13.3 to 13.6'.	
														14				14.7'	
																1064		LIMESTONE; gray; slightly weathered; medium bedded; dry; (Nolans Limestone).	
														16					
																1062			
														18					
																1060			
														20					
																1058			
														22					
																1056			
														24					
																1054			
														26					
																1052			
														28					
														30		1050			

9/26/2003 2:05 PM Westar Energy

BLACK & VEATCH

BORING LOG

BORING NO. SP-18

SHEET 1 OF 1

CLIENT	PROJECT	PROJECT NO.
Westar Energy	Arkansas City MGP Site	65541.2010

PROJECT LOCATION	COORDINATES	GROUND ELEVATION (DATUM)	TOTAL DEPTH
Arkansas City, KS	N 749319.83 E 2280112.75	1,078.65 ft (msl)	14.7 (ft)

SURFACE CONDITIONS	DATE START	DATE FINISHED
Grass lot south of MGP site.	7/7/03	7/7/03

LOGGED BY	CHECKED BY	APPROVED BY
C. Ferguson	C. Ferguson	C. Hirner

SAMPLING							CORING										
SAMPLE TYPE	SAMPLE NUMBER	SET 6 INCHES	2ND 6 INCHES	3RD 6 INCHES	N VALUE	SAMPLE RECOVERY	CORE SIZE	RUN NUMBER	RUN LENGTH	RUN RECOVERY	RQD RECOVERY	PERCENT RECOVERY	RQD	DEPTH (FEET)	SAMPLE TYPE	ELEVATION (FEET)	GRAPHIC LOG	CLASSIFICATION OF MATERIALS	REMARKS
DP	1					1.8'				4.0'				0		1078		SILT; brown; non-plastic; dry; w/trace roots; (Fill).	Probe advanced w/2-1/4" OD direct push sampler. PID = 0 ppm from 0' to 14'.
																		0.7'	
																		SLAG/CINDERS; brown to black; fine grained; dry; (Fill). Trace brick at 1.2'.	
														2		1076			
														4		1074		4.0'	
DP	2					3.0'				8.0'								SILT; dark brown; non-plastic; moist. Grades brown at 5.9'.	Collected soil sample ACSP18S01P from 4.0 to 4.5' for chemical analysis.
														6		1072			
														8		1070		8.0'	
DP	3					2.9'				12.0'								SAND; light brown; poorly graded; fine grained; subangular; moist; w/trace silt; (Alluvium).	Collected soil sample ACSP18S02P from 8.0 to 9.0' for chemical analysis.
														10		1068		9.7'	
																		SILT; light brown to tan; non-plastic; moist; w/trace fine sand; (Alluvium). Clay lens from 10.2 to 10.5'. Grades wet at 10.8'.	Slight diesel fuel odor from 14.2 to 14.4'. PID = 17 ppm at 14.3'.
														12		1066			
DP	4					2.4'				14.7'								Grades dark gray at 14.2'.	Limestone chips in shoe of DP4 sampler. Sampler refusal at 14.7'.
														14		1064			
														16		1062			Bottom of probe at 14.7'. Ground water level not recorded. Probe backfilled to ground surface w/ bentonite chips on 7/7/03.
														18		1060			
														20		1058			
														22		1056			
														24		1054			
														26		1052			
														28		1050			
														30					

9/26/2003 2:05 PM Westar Energy

BLACK & VEATCH

BORING LOG

BORING NO. SP-19

SHEET 1 OF 1

CLIENT	PROJECT	PROJECT NO.
Westar Energy	Arkansas City MGP Site	65541.2010

PROJECT LOCATION	COORDINATES	GROUND ELEVATION (DATUM)	TOTAL DEPTH
Arkansas City, KS	N 749382.92 E 2280143.79	1,078.14 ft (msl)	13.2 (ft)

SURFACE CONDITIONS	DATE START	DATE FINISHED
Gravel area west of loading ramp on west side of storage building.	7/8/03	7/8/03

LOGGED BY	CHECKED BY	APPROVED BY
C. Ferguson	C. Ferguson	C. Hirner

SAMPLING							CORING										
SAMPLE TYPE	SAMPLE NUMBER	SET 6 INCHES	2ND 6 INCHES	3RD 6 INCHES	N VALUE	SAMPLE RECOVERY	CORE SIZE	RUN NUMBER	RUN LENGTH	RUN RECOVERY	RQD RECOVERY	PERCENT RECOVERY	RQD	DEPTH (FEET)	SAMPLE TYPE	ELEVATION (FEET)	GRAPHIC LOG	CLASSIFICATION OF MATERIALS	REMARKS
DP	1					3.1'				4.0'				0		1078		Silty SAND; dark brown; poorly graded; fine grained; dry; (Fill). Trace cinders at 0.4'.	Probe advanced w/2-1/4" OD direct push sampler.
														2		1076			
														4		1074		4.2'	
DP	2					4.0'				8.0'				6		1072		Silty SAND; brown; poorly graded; fine grained; subangular; moist; (Alluvium).	Very faint gasoline odor from 10.8 to 13.1'. PID = 0 ppm throughout probe.
														8		1070			
DP	3					3.6'				12.0'				10		1068		9.2' SILT; brown; non-plastic; moist; (Alluvium). Grades gray and wet at 10.8'.	Limestone chips in shoe of DP4 sampler. Sampler refusal at 13.2'.
DP	4					1.1'				13.2'				12		1066		Grades w/some clay at 12.7'.	
														14		1064			Bottom of probe at 13.2'. Ground water level not recorded. Probe backfilled to ground surface w/ bentonite chips on 7/8/03.
														16		1062			
														18		1060			
														20		1058			
														22		1056			
														24		1054			
														26		1052			
														28		1050			
														30					

9/26/2003 2:06 PM Westar Energy

BLACK & VEATCH

BORING LOG

BORING NO. SP-20
SHEET 1 OF 1

CLIENT	PROJECT	PROJECT NO.
Westar Energy	Arkansas City MGP Site	65541.2010

PROJECT LOCATION	COORDINATES	GROUND ELEVATION (DATUM)	TOTAL DEPTH
Arkansas City, KS	N 749343.15 E 2280201.08	1,081.37 ft (msl)	17.5 (ft)

SURFACE CONDITIONS	DATE START	DATE FINISHED
Gravel area south of storage building.	7/8/03	7/8/03

LOGGED BY	CHECKED BY	APPROVED BY
C. Ferguson	C. Ferguson	C. Hirner

SAMPLING: SAMPLE TYPE	SAMPLE NUMBER	SET 6 INCHES	2ND 6 INCHES	3RD 6 INCHES	N VALUE	SAMPLE RECOVERY	CORING: CORE SIZE	RUN NUMBER	RUN LENGTH	RUN RECOVERY	RQD RECOVERY	PERCENT RECOVERY	RQD	DEPTH (FEET)	SAMPLE TYPE	ELEVATION (FEET)	GRAPHIC LOG	CLASSIFICATION OF MATERIALS	REMARKS
DP	1					3.1'				4.0'				0		1080		Silty SAND; brown; well graded; fine to medium grained; subangular; dry; (Fill).	Probe advanced w/2-1/4" OD direct push sampler. PID = 0 ppm throughout probe.
														2				Dark brown from 1.5 to 1.7'. W/trace clay from 2.0' to 2.6'.	
														4		1078		4.6'	
DP	2					1.9'				8.0'				6		1076		SAND; tan; well graded; fine to medium grained; subangular; moist. 5.2'	
																1074		Silty SAND; dark brown; poorly graded; fine grained; subangular; moist; (Alluvium).	
														8				8.2'	
DP	3					2.6'				12.0'				10		1072		Gravelly SAND; brown; well graded; fine to medium grained; subangular; moist. 9.0'	
																1070		Silty SAND; brown; poorly graded; fine grained; subangular; moist; (Alluvium).	
														12				Grades tan at approximately 12'. Grades w/trace bedding at 12.8'.	
DP	4					2.8'				16.0'				14		1068		Thinly bedded clay lens at 13.9'. Grades well graded and fine to medium grained at 14.5'.	Limestone chips in shoe of DP5 sampler.
																1066			
DP	5					1.4'				17.5'				16		1064		Grades wet w/some rounded gravel at 17.1'.	Sampler refusal at 17.5'.
														18		1062			Bottom of probe at 17.5'. Ground water level not recorded. Probe backfilled to ground surface w/ bentonite chips on 7/8/03.
														20		1060			
														22		1058			
														24		1056			
														26		1054			
														28		1052			
														30					

9/26/2003 2:06 PM Westar Energy

BLACK & VEATCH

BORING LOG

BORING NO. SP-21
SHEET 1 OF 1

CLIENT	PROJECT	PROJECT NO.
Westar Energy	Arkansas City MGP Site	65541.2010

PROJECT LOCATION	COORDINATES	GROUND ELEVATION (DATUM)	TOTAL DEPTH
Arkansas City, KS	N 749360.95 E 2280182.78	1,080.60 ft (msl)	15.5 (ft)

SURFACE CONDITIONS	DATE START	DATE FINISHED
Grass area southwest of storage building.	7/8/03	7/8/03

LOGGED BY	CHECKED BY	APPROVED BY
C. Ferguson	C. Ferguson	C. Hirner

SAMPLING: SAMPLE TYPE	SAMPLE NUMBER	SET 6 INCHES	2ND 6 INCHES	3RD 6 INCHES	N VALUE	SAMPLE RECOVERY	CORING: CORE SIZE	RUN NUMBER	RUN LENGTH	RUN RECOVERY	RQD RECOVERY	PERCENT RECOVERY	RQD	DEPTH (FEET)	SAMPLE TYPE	ELEVATION (FEET)	GRAPHIC LOG	CLASSIFICATION OF MATERIALS	REMARKS
DP	1					2.8'				4.0'				0		1080		Silty SAND; brown; poorly graded; fine to medium grained; subangular; dry; w/trace gravel; (Fill). Grades tan and gravel grades out at 0.9'.	Probe advanced w/2-1/4" OD direct push sampler.
														2		1078			
														4		1076		4.2'	
DP	2					2.5'				8.0'				6		1074		Sandy SILT; dark brown; non-plastic; moist; (Alluvium). Grades brown at 6.2'.	
														8		1072			
DP	3					3.0'				12.0'				10		1070		9.4' SAND; brown; poorly graded; fine grained; subangular; dry; w/some silt; (Alluvium).	PID = 0 ppm from 0 to 14'.
														12		1068		Grades tan w/trace bedding at approximately 12'. Grades brown at 13.6'.	PID = 11.4 ppm at 14.4'.
DP	4					2.7'				15.5'				14		1066		Grades wet at 14.0'. Grades gray; well graded and fine to medium grained at 14.4'.	Sampler refusal at 15.5'.
														16		1064			Bottom of probe at 15.5'. Ground water level not recorded. Probe backfilled to ground surface w/ bentonite chips on 7/8/03.
														18		1062			
														20		1060			
														22		1058			
														24		1056			
														26		1054			
														28		1052			
														30					

9/26/2003 2:07 PM Westar Energy

BLACK & VEATCH

BORING LOG

BORING NO. SP-22
SHEET 1 OF 1

CLIENT	PROJECT	PROJECT NO.
Westar Energy	Arkansas City MGP Site	65541.2010

PROJECT LOCATION	COORDINATES	GROUND ELEVATION (DATUM)	TOTAL DEPTH
Arkansas City, KS	N 749343.05 E 2280167.99	1,080.37 ft (msl)	19.0 (ft)

SURFACE CONDITIONS	DATE START	DATE FINISHED
Grass area southwest of storage building.	7/8/03	7/8/03

LOGGED BY	CHECKED BY	APPROVED BY
C. Ferguson	C. Ferguson	C. Hirner

SAMPLING							CORING									
SAMPLE TYPE	SAMPLE NUMBER	SET 6 INCHES	2ND 6 INCHES	3RD 6 INCHES	N VALUE	SAMPLE RECOVERY	CORE SIZE	RUN NUMBER	RUN LENGTH	RUN RECOVERY	RQD RECOVERY	PERCENT RECOVERY	RQD	DEPTH (FEET)	SAMPLE TYPE	ELEVATION (FEET)	GRAPHIC LOG	CLASSIFICATION OF MATERIALS	REMARKS
DP	1					2.9'				4.0'				0		1080		Silty SAND; brown; poorly graded; fine grained; subangular; dry; w/trace gravel; (Fill). Cinders at 0.4'. Tan from 1.2 to 1.7'. Grades moist at 1.9'.	Probe advanced w/2-1/4" OD direct push sampler.
														2		1078			
														4		1076			
																		5.1'	
DP	2					3.6'				8.0'				6		1074		Silty SAND; dark brown; poorly graded; fine grained; subangular; moist; (Alluvium). Grades brown at 6.6'.	
														8		1072			PID = 0 ppm from 0 to 16'.
DP	3					3.4'				12.0'				10		1070			
																		10.5'	
																		SILT; brown; non-plastic; moist; (Alluvium).	Slight tar odor from 16.8 to 17.9'.
														12		1068		Grades wet at 12.4'.	PID = 40 ppm at 17.0'.
																		13.6'	
DP	4					2.3'				16.0'				14		1066		SAND; tan; well graded; fine to medium grained; subangular; wet; w/trace silt and fine gravel; (Alluvium).	PID = 2 ppm at 17.6'. Sampler refusal at 19.0'.
														16		1064			
																		16.8'	
DP	5					1.9'				19.0'				18		1062		CLAY; gray to tan; non-plastic; wet; (weathered bedrock).	
																		18.6'	
																		LIMESTONE; gray to tan; highly weathered and fractured; dry; (Nolans Limestone).	Bottom of probe at 19.0'. Ground water level not recorded. Probe backfilled to ground surface w/ bentonite chips on 7/8/03.
														20		1060			
														22		1058			
														24		1056			
														26		1054			
														28		1052			
														30					

9/26/2003 2:08 PM Westar Energy

BLACK & VEATCH

BORING LOG

BORING NO. MW-1

SHEET 1 OF 1

CLIENT	PROJECT	PROJECT NO.
Westar Energy	Arkansas City MGP Site	65541.2010

PROJECT LOCATION	COORDINATES	GROUND ELEVATION (DATUM)	TOTAL DEPTH
Arkansas City, KS	N 749477.13 E 2280008.32	1,077.65 ft (msl)	15.0 (ft)

SURFACE CONDITIONS	DATE START	DATE FINISHED
Concrete pad west of garage.	7/7/03	7/7/03

LOGGED BY	CHECKED BY	APPROVED BY
C. Ferguson	C. Ferguson	C. Hirner

SAMPLING: SAMPLE TYPE	SAMPLE NUMBER	SET 6 INCHES	2ND 6 INCHES	3RD 6 INCHES	N VALUE	SAMPLE RECOVERY
CORING: CORE SIZE	RUN NUMBER	RUN LENGTH	RUN RECOVERY	RQD RECOVERY	PERCENT RECOVERY	RQD
			0.0'			0.5'
DP	1		4.0'			1.0'
DP	2		8.0'			1.5'
DP	3		12.0'			1.8'
DP	4		15.0'			2.6'

DEPTH (FEET)	SAMPLE TYPE	ELEVATION (FEET)	GRAPHIC LOG	CLASSIFICATION OF MATERIALS	REMARKS
0		1076		CONCRETE.	Probe advanced w/2-1/4" OD direct push sampler. Collected soil sample ACMW1S01P from 0.5 to 5.0' for chemical analysis. Collected soil sample ACMW1S02P from 8.0 to 9.8' for chemical analysis. Sampler refusal at 15.0'. PID = 0 ppm throughout probe.
0.5'				SAND; brown; well graded; fine to coarse ground; rounded; dry; w/some silt; (Fill).	
0.8'				Silty SAND; dark brown; poorly graded; fine grained; subangular; moist; (Alluvium).	
2		1074			
4		1072			
6		1070			
8		1068		SILT; light brown; non-plastic; moist; (Alluvium).	
8.0'					
10		1066			
12		1064		Grades wet at 14.0'. Slightly weathered limestone chips at 14.3'.	
14		1062			
14.5'				LIMESTONE; gray; slightly weathered; medium bedded; dry; (Nolans Limestone).	Bottom of probe at 15.0'. Ground water level not recorded. Monitoring well installed 7/7/03 after reaming the hole w/ 3.5" OD rods.
16		1060			
18		1058			
20		1056			
22		1054			
24		1052			
26		1050			
28		1048			
30					

9/26/2003 2:10 PM Westar Energy

BLACK & VEATCH

BORING LOG

BORING NO. MW-2

SHEET 1 OF 1

CLIENT	PROJECT	PROJECT NO.
Westar Energy	Arkansas City MGP Site	65541.2010

PROJECT LOCATION	COORDINATES	GROUND ELEVATION (DATUM)	TOTAL DEPTH
Arkansas City, KS	N 749327.59 E 2280073.89	1,077.15 ft (msl)	15.4 (ft)

SURFACE CONDITIONS	DATE START	DATE FINISHED
Grass area in SW corner of former MGP property.	7/8/03	7/8/03

LOGGED BY	CHECKED BY	APPROVED BY
C. Ferguson	C. Ferguson	C. Hirner

SAMPLING							CORING									
SAMPLE TYPE	SAMPLE NUMBER	SET 6 INCHES	2ND 6 INCHES	3RD 6 INCHES	N VALUE	SAMPLE RECOVERY	CORE SIZE	RUN NUMBER	RUN LENGTH	RUN RECOVERY	RQD RECOVERY	PERCENT RECOVERY	RQD	DEPTH (FEET)	SAMPLE TYPE	ELEVATION (FEET)	GRAPHIC LOG	CLASSIFICATION OF MATERIALS	REMARKS
DP	1					1.7'				4.0'				0		1076		Silty SAND; dark brown; poorly graded; fine grained; subangular; dry; w/trace roots; (Fill). Cinders and slag from 1.0 to 1.4'.	Probe advanced w/2-1/4" OD direct push sampler. Collected soil sample ACMW2S01P from 0.5 to 4.5' for chemical analysis.
														2		1074			
														4				4.0'	
DP	2					2.7'				8.0'				6		1072		Silty SAND; dark brown; poorly graded; fine grained; subangular; moist; (Alluvium).	Collected soil sample ACMW2S02P from 8.0 to 8.5' for chemical analysis. PID = 0 ppm throughout probe.
														8		1070			
DP	3					4.0'				12.0'				10		1068		Grades brown at 10.8'.	
														12		1066			
DP	4					2.8'				15.4'				14		1064		Grades tan at 12.3'. Grades wet at 12.6'. Grades dark gray at 14.5'.	Very slight diesel fuel odor from 14.5 to 14.8'.
																1062		14.6' LIMESTONE; gray to dark gray; highly weathered and fractured; medium bedded; wet; (Nolans Limestone).	Sampler refusal at 15.4'. Bottom of probe at 15.4'. Ground water level not recorded. Monitoring well installed 7/8/03 after reaming the hole w/ 3.5" OD rods.
														16		1060			
														18		1058			
														20		1056			
														22		1054			
														24		1052			
														26		1050			
														28		1048			
														30					

9/26/2003 2:11 PM Westar Energy

BLACK & VEATCH

BORING LOG

BORING NO. MW-3

CLIENT	PROJECT	PROJECT NO.
Westar Energy	Arkansas City MGP Site	65541.2010

PROJECT LOCATION	COORDINATES	GROUND ELEVATION (DATUM)	TOTAL DEPTH
Arkansas City, KS	N 749488.49 E 2280278.68	1,083.18 ft (msl)	29.8 (ft)

SURFACE CONDITIONS	DATE START	DATE FINISHED
Grass area near NE property corner.	7/7/03	7/7/03

LOGGED BY	CHECKED BY	APPROVED BY
C. Ferguson	C. Ferguson	C. Hirner

SAMPLING							CORING									
SAMPLE TYPE	SAMPLE NUMBER	SET 6 INCHES	2ND 6 INCHES	3RD 6 INCHES	N VALUE	SAMPLE RECOVERY	CORE SIZE	RUN NUMBER	RUN LENGTH	RUN RECOVERY	RQD RECOVERY	PERCENT RECOVERY	RQD	DEPTH (FEET)	SAMPLE TYPE	ELEVATION (FEET)	GRAPHIC LOG	CLASSIFICATION OF MATERIALS	REMARKS
DP	1					2.9'				4.0'				0		1082		SILT; dark brown; non-plastic; dry; w/trace fine sand and roots.	Probe advanced w/2-1/4" OD direct push sampler.
														2					
														2.6'		1080		Silty SAND; dark brown; poorly graded; fine grained; subangular; dry; (Alluvium).	Soil sample ACMW3SS1S01P collected from 0 to 0.5' for chemical analysis.
DP	2					3.0'				8.0'				4					
																1078			
														6					Soil sample ACMW3S01P collected from 0.5 to 5.0' for chemical analysis.
																1076			
														8					
DP	3					3.9'				12.0'						1074		9.1' SAND; tannish brown; poorly graded; fine grained; subangular; moist; w/trace silt; (Alluvium).	Soil sample ACMW3S02P collected from 6.0 to 9.0' for chemical analysis.
														10		1072		10.5' SILT; brown; non-plastic; moist; (Alluvium).	
														12				12.0' SAND; tan; poorly graded; fine grained; subangular; moist; (Alluvium).	
DP	4					1.8'				16.0'						1070			
														14		1068			
														16					
DP	5					1.8'				20.0'						1066		Grades wet at 16.7'. Grades w/some silt at 17.1'. Clay lens w/trace organics at 17.5', and from 21.1 to 21.3'.	
														18		1064			
														20					Moderate resistance to sampler at 28.5, and sampler refusal at 29.8'. PID = 0 ppm throughout probe.
DP	6					1.4'				24.0'						1062			
														22		1060			
														24					
DP	7					1.2'				28.0'						1058			
														26		1056			
														28					
DP	8					0.8'				29.8'						1054		28.5' LIMESTONE; gray; highly weathered; wet; w/ numerous fossilized shells; (Nolans Limestone).	
														30					

9/26/2003 2:15 PM Westar Energy

BLACK & VEATCH

BORING LOG

BORING NO. MW-3
SHEET 2 OF 2

CLIENT	PROJECT	PROJECT NO.
Westar Energy	Arkansas City MGP Site	65541.2010

PROJECT LOCATION	COORDINATES	GROUND ELEVATION (DATUM)	TOTAL DEPTH
Arkansas City, KS	N 749488.49 E 2280278.68	1,083.18 ft (msl)	29.8 (ft)

SURFACE CONDITIONS	DATE START	DATE FINISHED
Grass area near NE property corner.	7/7/03	7/7/03

LOGGED BY	CHECKED BY	APPROVED BY
C. Ferguson	C. Ferguson	C. Hirner

SAMPLING							CORING											
SAMPLE TYPE	SAMPLE NUMBER	SET 6 INCHES	2ND 6 INCHES	3RD 6 INCHES	N VALUE	SAMPLE RECOVERY	CORE SIZE	RUN NUMBER	RUN LENGTH	RUN RECOVERY	RQD RECOVERY	PERCENT RECOVERY	RQD	DEPTH (FEET)	SAMPLE TYPE	ELEVATION (FEET)	GRAPHIC LOG	CLASSIFICATION OF MATERIALS	REMARKS
														30		1052			Bottom of probe at 29.8' Ground level not recorded. Monitoring well installed on 7/7/03 after reaming the hole w/ 3.5" OD rods.
														32		1050			
														34		1048			
														36		1046			
														38		1044			
														40		1042			
														42		1040			
														44		1038			
														46		1036			
														48		1034			
														50		1032			
														52		1030			
														54		1028			
														56		1026			
														58		1024			
														60					

9/26/2003 2:15 PM Westar Energy

BLACK & VEATCH

BORING LOG

BORING NO. MW-4

SHEET 1 OF 1

CLIENT	PROJECT	PROJECT NO.
Westar Energy	Arkansas City MGP Site	65541.2010

PROJECT LOCATION	COORDINATES	GROUND ELEVATION (DATUM)	TOTAL DEPTH
Arkansas City, KS	N 749339.06 E 2280273.43	1,081.02 ft (msl)	16.5 (ft)

SURFACE CONDITIONS	DATE START	DATE FINISHED
Gravel area southeast of storage building.	7/7/03	7/7/03

LOGGED BY	CHECKED BY	APPROVED BY
C. Ferguson	C. Ferguson	C. Hirner

SAMPLING							CORING											
SAMPLE TYPE	SAMPLE NUMBER	SET 6 INCHES	2ND 6 INCHES	3RD 6 INCHES	N VALUE	SAMPLE RECOVERY	CORE SIZE	RUN NUMBER	RUN LENGTH	RUN RECOVERY	RQD RECOVERY	PERCENT RECOVERY	RQD	DEPTH (FEET)	SAMPLE TYPE	ELEVATION (FEET)	GRAPHIC LOG	CLASSIFICATION OF MATERIALS	REMARKS
DP	1					3.6'				4.0'				0		1080		SILT; brown; non-plastic; dry; w/trace fine sand and roots; (Fill).	Probe advanced w/2-1/4" OD direct push sampler. Collected soil sample ACMW4SS1S01P from 0 to 0.5' for chemical analysis.
														2		1078		Grades moist w/trace clay at 2.1'.	
														4		1076		Large gravel at 3.1'. Clay grades out at 3.2'.	
DP	2					3.6'				8.0'				6		1074			Collected soil sample ACMW4S01P from 1.0 to 5.0' for chemical analysis.
																		7.4'	
														8		1072		SAND; brownish tan; poorly graded; fine grained; subangular; dry; (Alluvium). Grades tan at approximately 8.0'.	
DP	3					3.0'				12.0'				10		1070		Grades moist w/trace silt at 10.8'.	Collected soil sample ACMW4S02P from 6.5' to 9.0' for chemical analysis.
														12		1068		Grades fine to medium grained at approximately 12.0'. Grades well graded; medium to coarse grained; w/ some gravel at 12.7'.	Limestone fragment stuck in shoe of DP-4 sampler.
DP	4					2.8'				16.0'				14		1066			Sampler refusal at 16.5'.
														16				16.0'	PID = 0 ppm throughout boring.
DP	5		16.5'			0.3'										1064		LIMESTONE; gray; highly weathered; medium bedded; dry; (Nolans Limestone).	Bottom of probe at 16.5'. Ground water level not recorded. Probe backfilled to ground surface w/ bentonite chips on 7/7/03.
														18		1062			
														20		1060			
														22		1058			
														24		1056			
														26		1054			
														28		1052			
														30					

9/26/2003 2:16 PM Westar Energy

BLACK & VEATCH

BORING LOG

BORING NO. MW-5

SHEET 1 OF 1

CLIENT	PROJECT	PROJECT NO.
Westar Energy	Arkansas City MGP Site	65541.2010

PROJECT LOCATION	COORDINATES	GROUND ELEVATION (DATUM)	TOTAL DEPTH
Arkansas City, KS	N 749327.27 E 2280173.71	1,079.86 ft (msl)	15.4 (ft)

SURFACE CONDITIONS	DATE START	DATE FINISHED
Grass area southwest of storage building.	7/8/03	7/8/03

LOGGED BY	CHECKED BY	APPROVED BY
C. Ferguson	C. Ferguson	C. Hirner

SAMPLING							CORING										
SAMPLE TYPE	SAMPLE NUMBER	SET 6 INCHES	2ND 6 INCHES	3RD 6 INCHES	N VALUE	SAMPLE RECOVERY	CORE SIZE	RUN NUMBER	RUN LENGTH	RUN RECOVERY	RQD RECOVERY	PERCENT RECOVERY	RQD	DEPTH (FEET)	SAMPLE TYPE	ELEVATION (FEET)	GRAPHIC LOG	CLASSIFICATION OF MATERIALS	REMARKS
DP	1			4.0'		2.9'								0				SILT; brown; non-plastic; dry; w/trace roots; (Fill). Cinders and slag from 0.7 to 0.9'.	Probe advanced w/2-1/4" OD direct push sampler.
														1.0'				Silty SAND; light brown; poorly graded; fine grained; subangular; dry; (Alluvium). Grades moist at 2.1'.	
														2		1078			
														4		1076		Grades dark brown at 4.4'.	
DP	2			8.0'		4.0'								6		1074		Grades brown at 5.8'.	
														8		1072			
DP	3			12.0'		3.2'								10		1070		Grades grayish brown at 10.8'.	
														12		1068			
DP	4			15.4'		2.7'								12.6'				SAND; tan; well graded; fine to medium grained; rounded; moist; w/trace fine gravel; (Alluvium). Grades fine to coarse grained and wet at 14.4'.	PID = 0 ppm throughout probe. Sampler refusal at 15.4'.
														14		1066			
														14.6'				LIMESTONE; gray; highly weathered and fractured; medium bedded; wet; (Nolans Limestone).	Bottom of probe at 15.4'. Ground water level not recorded. Monitoring well installed on 7/8/03 after reaming the hole w/ 3.5" OD rods.
														16		1064			
														18		1062			
														20		1060			
														22		1058			
														24		1056			
														26		1054			
														28		1052			
														30		1050			

9/26/2003 2:17 PM Westar Energy

BLACK & VEATCH

Monitoring Well LOG

Monitoring Well NO. MW-1
SHEET 1 OF 1

CLIENT	PROJECT	PROJECT NO.
Westar Energy	Arkansas City MGP Site	65541.2010

PROJECT LOCATION	COORDINATES	TOP OF RISER ELEVATION (DATUM)	DATE
Arkansas City, KS	N 749477.13 E 2280008.32	1,077.35 ft (msl)	7/7/03

STRATUM MONITORED
Alluvial silt and sand above bedrock.

INSPECTOR	CHECKED BY	APPROVED BY
C. Ferguson	C. Ferguson	C. Hirner

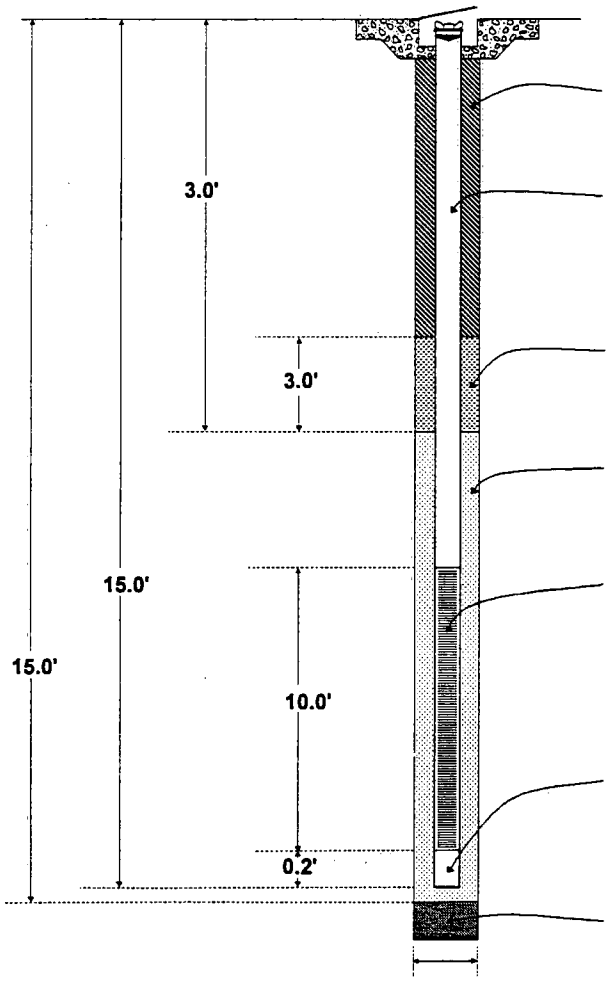

SURFACE PROTECTION
Type: Cast Iron Flush Mounted Cover
Top of Riser: 1,077.35 (ft) (msl)
Ground Surface: 1,077.65 (ft) (msl)

SURFACE SEAL
Type: NA

RISER PIPE
Diameter: 1" OD
Type: NSF Certified Schedule 40 PVC

PRIMARY SEAL
Type: Bentonite Chips

FILTER MATERIAL
Type: 20/40 Prepacked Silica Sand

SCREEN
Diameter: 1" OD
Type: NSF Certified Schedule 40 PVC
Slot dimensions: 0.01" Factory Slots

SEDIMENT TRAP
Diameter: 1" OD
Type: PVC

LOWER SEAL
Type: NA

BORING DIAMETER
DIAMETER: 3.5"
*Note-Diagram not shown to scale

INSTALLATION METHOD: Probe advanced to completion; set prepacked screen and riser; placed filter pack and seal; hydrated seal then backfilled to 1' bgs w/bentonite chips. Monitoring well completed with 7" diameter, flush mounted, cast iron cover, and expandable, locking riser cap.

NOTES: 0.2' sediment trap attached to base of screen. Monitoring well developed by pumping dry twice (1 liter) with a peristaltic pump on 7/9/03.

BLACK & VEATCH

Monitoring Well LOG

Monitoring Well NO. MW-2
SHEET 1 OF 1

CLIENT	PROJECT	PROJECT NO.
Westar Energy	Arkansas City MGP Site	65541.2010

PROJECT LOCATION	COORDINATES	TOP OF RISER ELEVATION (DATUM)	DATE
Arkansas City, KS	N 749327.59 E 2280073.89	1,076.90 ft (msl)	7/8/03

STRATUM MONITORED
Alluvial silt and sand above bedrock.

INSPECTOR	CHECKED BY	APPROVED BY
C. Ferguson	C. Ferguson	C. Hirner

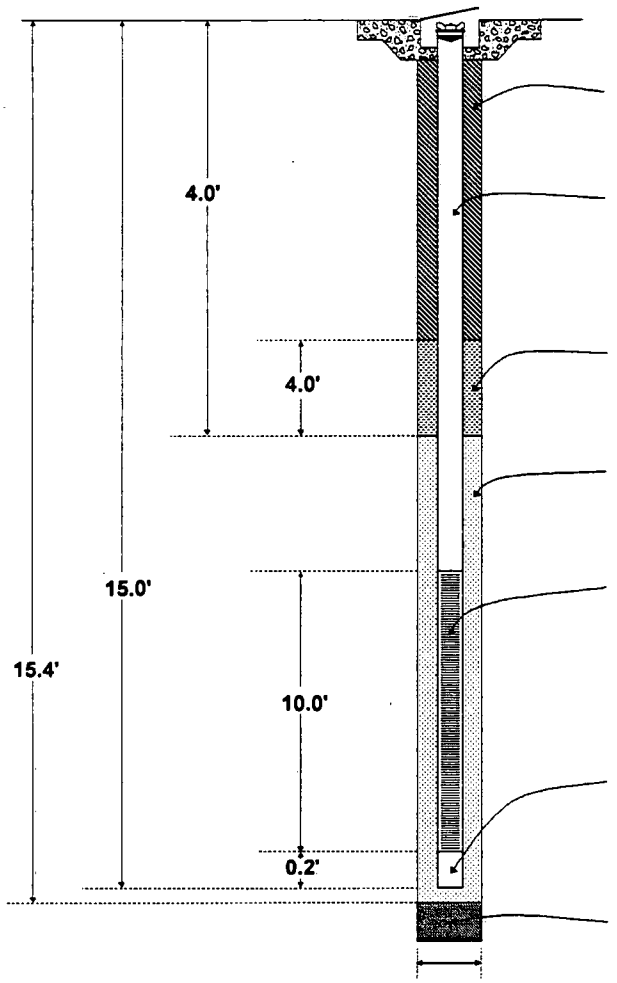

SURFACE PROTECTION
Type: Cast Iron Flush Mounted Cover
Top of Riser: 1,076.90 (ft) (msl)
Ground Surface: 1,077.15 (ft) (msl)

SURFACE SEAL
Type: NA

RISER PIPE
Diameter: 1" OD
Type: NSF Certified Schedule 40 PVC

PRIMARY SEAL
Type: Bentonite Chips

FILTER MATERIAL
Type: 20/40 Prepacked Silica Sand

SCREEN
Diameter: 1" OD
Type: NSF Certified Schedule 40 PVC
Slot dimensions: 0.01" Factory Slots

SEDIMENT TRAP
Diameter: 1" OD
Type: PVC

LOWER SEAL
Type: NA

BORING DIAMETER
DIAMETER: 3.5"
*Note-Diagram not shown to scale

INSTALLATION METHOD: Probe advanced to completion; set prepacked screen and riser; placed filter pack and seal; hydrated seal then backfilled to 1' bgs w/bentonite chips. Monitoring well completed with 7" diameter, flush mounted, cast iron cover, and expandable, locking riser cap.

NOTES: 0.2' sediment trap attached to base of screen. Monitoring well developed by pumping until clear (4.3 liters) with a peristaltic pump on 7/9/03.

BLACK & VEATCH

Monitoring Well LOG

Monitoring Well NO. MW-3
SHEET 1 OF 1

CLIENT	PROJECT	PROJECT NO.
Westar Energy	Arkansas City MGP Site	65541.2010

PROJECT LOCATION	COORDINATES	TOP OF RISER ELEVATION (DATUM)	DATE
Arkansas City, KS	N 749488.49 E 2280278.63	1,082.83 ft (msl)	7/7/03

STRATUM MONITORED
Alluvial silt and sand above bedrock.

INSPECTOR	CHECKED BY	APPROVED BY
C. Ferguson	C. Ferguson	C. Hirner

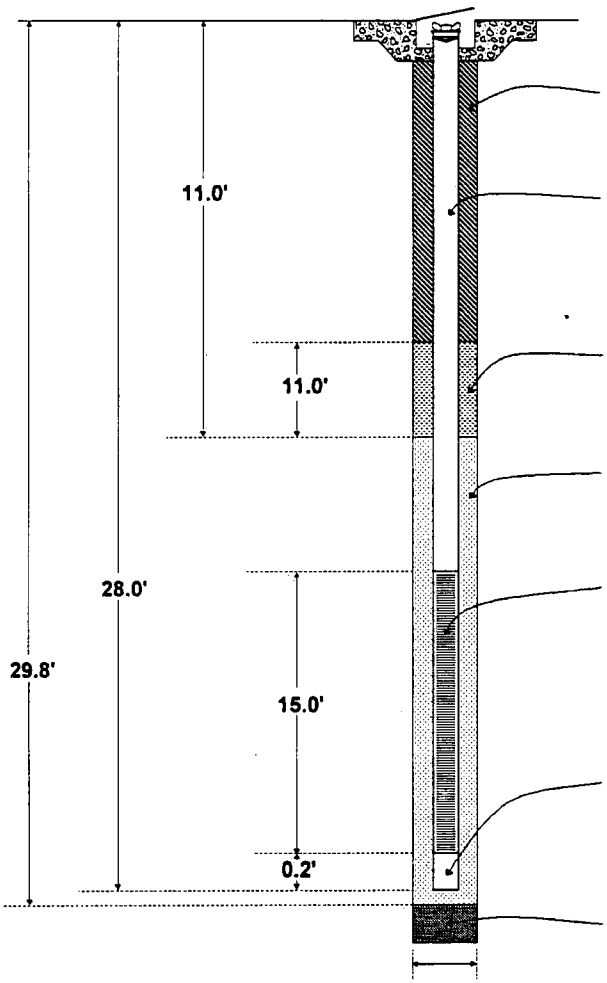

SURFACE PROTECTION
Type: Cast Iron Flush Mounted Cover
Top of Riser: 1,082.83 (ft) (msl)
Ground Surface: 1,083.18 (ft) (msl)

SURFACE SEAL
Type: NA

RISER PIPE
Diameter: 1" OD
Type: NSF Certified Schedule 40 PVC

PRIMARY SEAL
Type: Bentonite Chips

FILTER MATERIAL
Type: 20/40 Prepacked Silica Sand

SCREEN
Diameter: 1" OD
Type: NSF Certified Schedule 40 PVC
Slot dimensions: 0.01" Factory Slots

SEDIMENT TRAP
Diameter: 1" OD
Type: PVC

LOWER SEAL
Type: NA

BORING DIAMETER
DIAMETER: 3.5'
*Note-Diagram not shown to scale

INSTALLATION METHOD: Probe advanced to completion; set prepacked screen and riser; placed filter pack and seal; hydrated seal then backfilled to 1' bgs w/bentonite chips. Monitoring well completed with 7" diameter, flush mounted, cast iron cover, and expandable, locking riser cap.

NOTES: 0.2' sediment tap attached to base of screen. Monitoring well developed by pumping until clear (9 liters) with a peristaltic pump on 7/9/03.

BLACK & VEATCH

Monitoring Well LOG

Monitoring Well NO. MW-5
SHEET 1 OF 1

CLIENT	PROJECT	PROJECT NO.
Westar Energy	Arkansas City MGP Site	65541.2010

PROJECT LOCATION	COORDINATES	TOP OF RISER ELEVATION (DATUM)	DATE
Arkansas City, KS	N 749327.27 E 2280173.71	1,079.57 ft (msl)	7/8/03

STRATUM MONITORED
Alluvial silt and sand.

INSPECTOR	CHECKED BY	APPROVED BY
C. Ferguson	C. Ferguson	C. Hirner

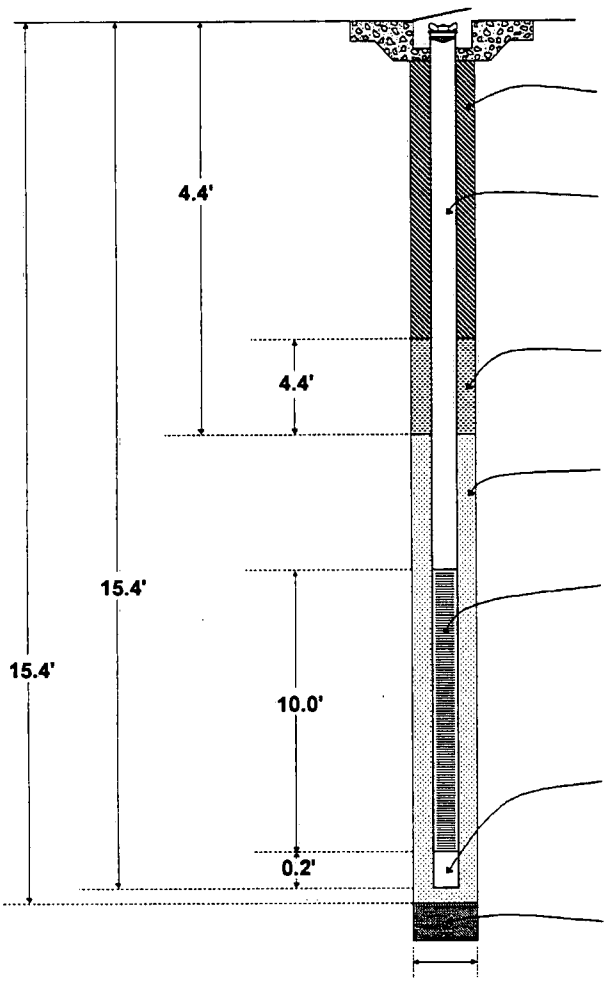

SURFACE PROTECTION
Type: Cast Iron Flush Mounted Cover
Top of Riser: 1,079.57 (ft) (msl)
Ground Surface: 1,079.86 (ft) (msl)

SURFACE SEAL
Type: NA

RISER PIPE
Diameter: 1" OD
Type: NSF Certified Schedule 40 PVC

PRIMARY SEAL
Type: Bentonite Chips

FILTER MATERIAL
Type: 20/40 Prepacked Silica Sand

SCREEN
Diameter: 1" OD
Type: NSF Certified Schedule 40 PVC
Slot dimensions: 0.01" Factory Slots

SEDIMENT TRAP
Diameter: 1" OD
Type: PVC

LOWER SEAL
Type: NA

BORING DIAMETER
DIAMETER: 3.5"
*Note-Diagram not shown to scale

INSTALLATION METHOD: Probe advanced to completion; set prepacked screen and riser; placed filter pack and seal; hydrated seal then backfilled to 1' bgs w/bentonite chips. Monitoring well completed with 7" diameter, flush mounted, cast iron cover, and expandable, locking riser cap.

NOTES: 0.2' sediment trap attached to base of screen. Monitoring well developed by pumping until clear (4.3 liters) with a peristaltic pump on 7/9/03.

APPENDIX B

MONITORING WELL DEVELOPMENT AND SAMPLING FORMS

Ground Water Sampling Record

Page 1 of 1

Facility Name: Arkansas City MGP Date: 7/11/03

Well I.D. MW-1 Well Depth 14.20 Well Dia. ~~12.00~~ cnf. Depth to GW 12.00'

Water Column Height 2.2'

FTL Signature: C. Ferguson / D. Lade

Type of Sampler/Equipment: low flow cell w/ peristaltic pump

Weather Conditions: 85° & sunny

Notes:

Time	Water Level	Removal Rate	Removal Volume	Sample Start/End	Water Quality Parameters: ORP (MV)	Temp (F ~~or C~~)	pH	Conductivity (umhos)	DO (ppm)	Turbidity (NTU)
0957			0.4		-81.7	70.51	11.33	944	3.80	25.5
0959			0.6		-92.2	70.11	11.57	1197	4.62	9.64
1001			0.9		-96.7	69.58	11.67	1320	4.94	10.2
1002			1.1	Dry	-102.8	69.89	11.74	1416	4.76	—

Black & Veatch

T00001Z2V

130937.411

Ground Water Sampling Record

Facility Name: Arkansas City MGP Date: 7/11/03

Well I.D. MW-2 Well Depth 14.4' Well Dia. 2" Depth to GW 10.65'

Water Column Height 3.75'

FTL Signature: C. Ferguson / D. Lade

Type of Sampler/Equipment: low flow cell w/peristaltic pump

Weather Conditions: 90° & sunny

Notes:

Time	Water Level	Removal Rate	Removal Volume	Sample Start/End	ORP (MV)	Temp (F ~~or C~~)	pH	Conductivity (umhos)	DO (ppm)	Turbidity (NTU)
					Water Quality Parameters					
1131			0.5 Liter		27.5	65.63	7.20	443	3.72	86.1
1133			1.0 L		-0.3	66.56	6.95	445	3.64	38.1
1135			1.4 [illegible]		-6.0	66.67	6.81	450	3.61	22.5
1137			1.8		-8.1	66.69	6.77	452	3.59	10.7
1139			2.2		-9.3	66.72	6.71	454	3.55	6.73
1141			2.5		-10.4	66.57	6.67	455	3.59	4.96
1143			2.8		-10.7	66.48	6.64	456	3.57	3.12
1145			3.2		-11.0	66.38	6.63	456	3.56	2.27
1150				X						

Black & Veatch

T00001Z2V

130937.411

Ground Water Sampling Record

Facility Name: Arkansas City MGP Date: 7/11/03

Well I.D. MW-3 Well Depth 27.55' Well Dia. 1" Depth to GW 17.91

Water Column Height 9.64'

FTL Signature: C. Ferguson / D. Lade

Type of Sampler/Equipment: Low flow cell w/peristaltic pump

Weather Conditions: 95° & sunny

Notes:

Time	Water Level	Removal Rate	Removal Volume	Sample Start/End	ORP (MV)	Temp (F or C)	pH	Conductivity (umhos)	DO (ppm)	Turbidity (NTU)
1304	17.91		.75		-16.5	69.30	7.00	1075	1.71	>1000
1309			1.25		-21.4	68.40	6.93	1026	1.45	>1000
1312			1.50		-17.5	68.21	6.90	996	1.65	533
1314			2.00		-12.4	68.90	6.88	965	1.98	282
1317			2.45		-9.0	69.03	6.86	955	2.03	136
1319			2.75		-7.8	68.85	6.86	953	1.95	70.6
1322			3.15		-5.8	69.14	6.85	954	1.67	46.1
1325	1335	1315	3.50		-1.9	69.29	6.85	955	1.64	23 @
1327	1337	1382	3.25		-5.5	69.63	6.85	956	1.84	18.3
1330	14	1390	3.50		-9.7	70.38	6.84	956	1.87	12.7
1333		1333	3.25		-5.3	67.40	6.85	980	1.97	8.63
1335		1335	4.00		-5.2	67.21	6.86	948	2.04	27.00
1337		1337	4.25		-4.0	66.92	6.82	949	2.06	24.9
1340			4.50		-2.9	67.30	6.84	955	1.92	28.2
1342			4.75		-7.5	67.44	6.78	954	1.83	18.6
1344			5.00		-6.7	67.94	6.80	957	1.78	13.9

Water Quality Parameters

Black & Veatch

Ground Water Sampling Record

Facility Name: Arkansas City MGP Date: 7/4/03

Well I.D. MW-5 Well Depth 15.19 Well Dia. 2.0"OD Depth to GW 14.31

Water Column Height 0.88

FTL Signature: C. Ferguson / D. Lada

Type of Sampler/Equipment: Low flow cell w/ peristaltic pump

Weather Conditions: 90° & sunny

Notes: Turbidity increased as well got closer to going dry.

Time	Water Level	Removal Rate	Removal Volume	Sample Start/End	Water Quality Parameters: ORP (MV)	Temp (F ~~or C~~)	pH	Conductivity (umhos)	DO (ppm)	Turbidity (NTU)
1019	14.31									
1024			.5		225.6	69.40	8.21	900	3.09	224
1026			1.0		256.3	67.84	7.90	879	2.35	115
1029			1.25		215.2	67.80	7.66	886	1.95	31.8
1031			1.50		219.3	67.25	2.51	883	1.66	14.2
1033			1.75		226.0	68.13	2.42	879	1.56	11.8
1035			2.00		221.9	68.04	2.35	878	1.54	6.70
1037			2.30		223.0	67.72	2.28	877	1.64	11.2
1039			2.80		225.0	67.68	2.23	878	1.65	8.06
1041			3.30		227.0	67.47	2.18	877	1.65	32.2
1043			3.60		230.8	67.65	2.15	875	1.66	17.3
1045			3.70		231.0	68.00	2.12	879	1.68	11.2

Black & Veatch

T00001Z2V

130937.411

Monitoring Well Development Record

Facility Name: Arkansas City MGP Site Date: 7/9/03

Well I.D. MW-1 Well Depth 14.20 Well Dia. 2"OD Depth to GW 12.37

Water Column Height 1.8'

FTL Signature: C. Ferguson / D. Lade

Type of Sampler/Equipment: Low flow cell w/ Peristaltic pump

Weather Conditions: 90° and sunny

Notes: WENT DRY AFTER ONE LITER.

Time	Water Level	Removal Rate	Removal Volume	Sample Start/End	Water Quality Parameters: ORP (MV)	Temp (F ~~or C~~)	pH	Conductivity (umhos)	DO ~~(ppm)~~ mg/L	Turbidity (NTU)
1324	12.37				—	—	—	—	—	—
1330			0.75		2.92	24.86	12.03	2098	285.1	58.4
1337			0.85 DRY		—	—	—	—	—	—
1354			1.00 DRY		—	—	—	—	—	—

Black & Veatch

Monitoring Well Development Record

Facility Name: Arkansas City MGP Site Date: 7/9/03

Well I.D. MW-2 Well Depth 14.40' Well Dia. 2" Depth to GW 11.01

Water Column Height 3.4'

FTL Signature: C. Ferguson / D. Lade

Type of Sampler/Equipment: low flow all, peristaltic pump

Weather Conditions: 88° & Sunny

Notes: Water extremely silty during surging - no parameters until 1.5 liters.

Time	Water Level	Removal Rate	Removal Volume	Sample Start/End	Water Quality Parameters: ORP (MV)	Temp (F ~~or C~~)	pH	Conductivity (umhos)	DO (~~ppm~~) mg/L	Turbidity (NTU)
1211			1.5		-8.0	65.13	6.86	462	4.07	>1000
1214			2.3		-27.1	65.36	6.63	462	3.97	24.5
1217			2.87		-32.9	65.83	6.50	466	3.91	9.47
1220			3.4		-35.7	66.32	6.47	465	3.87	6.61
1223			3.8		-37.1	66.43	6.46	464	3.80	5.93
1226			4.3		-36.8	66.47	6.45	462	3.83	5.05

Black & Veatch

Monitoring Well Development Record

Facility Name: Arkansas City MGP Site Date: 7/9/03

Well I.D. MW-3 Well Depth 27.55' Well Dia. 1" Depth to GW 17.89

Water Column Height 9.66'

FTL Signature: C. Ferguson / D. Lade

Type of Sampler/Equipment: Low flow cell, Peristaltic Pump

Weather Conditions: 83° & Sunny

Notes:

Time	Water Level	Removal Rate	Removal Volume	Sample Start/End	ORP (MV)	Temp (F) ~~or C~~	pH	Conductivity (umhos)	DO ~~(ppm)~~ mg/L	Turbidity (NTU)
					Water Quality Parameters					
1025	17.89		.50							>1000
1032			1.25		56.8	66.54	7.00	881	3.98	>1000
1040			2.50		-8.7	67.50	7.07	872	4.20	>1000
1047			3.00		-3.8	66.68	6.97	884	3.35	>1000
1048			4.50		-3.8	65.00	6.97	904	3.68	278
1050			4.75		-1.7	65.31	6.92	922	3.17	335
1052			5.00		-1.7	65.63	6.87	940	2.30	>1000
1055			5.50		0.3	66.30	6.90	942	2.14	267
1057			6.00		0.3	66.21	6.89	955	1.97	161
1059			6.50		0.5	66.49	6.89	959	1.86	151
1102			~~6.0~~ 7.00		0.7	66.70	6.89	957	1.78	60.0
1104			7.25		0.5	66.99	6.90	959	1.98	351
1107			7.25		0.5	62.37	6.89	953	1.95	19.2
1109			8.25		0.5	62.46	6.89	944	1.99	15.9
1111	18.02		8.50		0.5	67.56	6.89	939	2.00	17.2

49

Black & Veatch

Monitoring Well Development Record

Facility Name: Arkansas City MGP Site Date: 7/9/03

Well I.D. MW-5 Well Depth 19.19 Well Dia. 1" OD Depth to GW 14.35

Water Column Height 0.84'

FTL Signature: C. Ferguson / D. Lade

Type of Sampler/Equipment: Low flow cell w/ peristaltic pump

Weather Conditions: 88° & Sunny

Notes: Pumped & surged tubing on first 0.5 liters. Water was extremely silty, so did not collect parameters until 2.0 liters were removed and water was relatively clear.
- The well recharged at approximately the same rate as the lowest pumping speed of the pump. Slight bubbles may have affected the DO readings.

Time	Water Level	Removal Rate	Removal Volume	Sample Start/End	Water Quality Parameters: ORP (MV)	Temp (F ~~or C~~)	pH	Conductivity (umhos)	DO (ppm) mg/L	Turbidity (NTU)
1132			~~1~~1.0 L		149.4	68.95	7.19	897	2.87	103
1135			1.4 L		170.1	69.10	7.06	894	2.38	48.3
1138			1.9 L		183.3	68.82	7.01	890	2.31	27.5
1141			2.4 L		185.6	68.73	6.97	888	2.20	20.0
1144			2.9 L		192.3	68.46	6.95	886	1.90	14.0
1147			3.4 L		196.9	68.50	6.94	884	1.73	9.02
1150			3.8 L		201.9	68.25	6.92	882	1.68	7.70
1153			4.3 L		206.9	68.21	6.91	879	1.67	6.04

Black & Veatch

APPENDIX C

SLUG TEST DATA

Aquifer Slug Test Analysis

Remedial Investigation Report
Arkansas City MGP Site

Purpose: Slug tests were performed at the Arkansas City MGP site on newly installed monitoring wells MW-1, MW-2, MW-3, and MW-5 as part of the RI field activities to determine the hydraulic conductivity of the geologic media surrounding the well screens.

Software: Data was collected using a Mini-Troll datalogger with Pocket-Situ 2000 Instrument Control Package, Version 3.69. Starpoint Super Slug 2.2 Software was used to analyze the slug test data. The required well and aquifer parameters, as well as the slug test data, were also entered into the program.

Assumptions:
1. The screened media is homogeneous, isotropic, infinite, in which soil and water are both incompressible.
2. Wells fully penetrate the aquifer.
3. Aquifer thickness is equal to the height of the water column within the well.

References:
1. Water Levels – collected July 11, 2003.
2. Slug Test Data – Data Logger Files collected July 15, 2003.
3. Well Dimensions – Monitoring Well Construction Logs located in the *Remedial Investigation Report* prepared by Black & Veatch.

Monitoring Well	Estimated Hydraulic Conductivity (centimeters/second)
MW-1	1.4×10^{-5}
MW-2	1.5×10^{-4}
MW-3	1.2×10^{-4}
MW-5	2.3×10^{-4}

Note:
I. The top of the water column was present within the screened interval of each well, which may have affected the conductivity results.

Data from file: C:\ARKANS~1\MW1FH.SLG
Title: MW-1 Falling Head Test
Site Name: Arkansas City MGP Site
Location: Kansas
Client: Westar Energy
Project Number: 65541.2010
Test Date: July 15, 2003
Well Number: MW-1
Casing Radius: 0.5 inches
Effective Well Radius: 1.8 inches
Aquifer Thickness: 2.2 feet
Water Table to Screen Bottom: 2.2 feet
Screen Length: 10 feet
Static Water Level: 2.14 decimal feet
K ratio is not entered
There are 128 time and drawdown measurements
Tests starts with trial 1
Time values will be adjusted by 0 days (0.000000 seconds)

Trial	Time (minutes)	Adjusted Time (minutes)	Drawdown (decimal feet)	Head (decimal feet)	Head Ratio
1	0	0	12.2	10.1	1
2	0.005	0.005	12.2	10	0.992
3	0.01	0.01	12.1	9.97	0.988
4	0.015	0.015	12	9.89	0.98
5	0.02	0.02	11.9	9.81	0.971
6	0.025	0.025	11.9	9.72	0.963
7	0.03	0.03	11.8	9.63	0.953
8	0.035	0.035	11.7	9.56	0.947
9	0.04	0.04	11.7	9.52	0.943
10	0.045	0.045	11.6	9.45	0.936
11	0.05	0.05	11.5	9.36	0.927
12	0.055	0.055	11.4	9.28	0.92
13	0.06	0.06	11.4	9.23	0.914
14	0.065	0.065	11.3	9.19	0.91
15	0.07	0.07	11.3	9.13	0.904
16	0.075	0.075	11.2	9.06	0.898
17	0.08	0.08	11.2	9.02	0.893
18	0.085	0.085	11.1	8.97	0.888
19	0.09	0.09	11.1	8.92	0.884
20	0.095	0.095	11	8.87	0.879
21	0.1	0.1	11	8.82	0.874
22	0.106	0.106	10.9	8.77	0.869
23	0.112	0.112	10.9	8.73	0.865
24	0.119	0.119	10.8	8.68	0.86
25	0.126	0.126	10.8	8.62	0.854
26	0.133	0.133	10.7	8.58	0.85
27	0.141	0.141	10.7	8.52	0.844
28	0.149	0.149	10.6	8.47	0.839
29	0.158	0.158	10.6	8.43	0.835
30	0.167	0.167	10.5	8.37	0.829
31	0.177	0.177	10.5	8.33	0.825
32	0.188	0.188	10.4	8.28	0.82
33	0.199	0.199	10.4	8.24	0.816
34	0.21	0.21	10.3	8.2	0.813
35	0.223	0.223	10.3	8.16	0.809
36	0.236	0.236	10.3	8.13	0.805
37	0.25	0.25	10.2	8.09	0.802
38	0.265	0.265	10.2	8.06	0.799
39	0.28	0.28	10.2	8.03	0.796
40	0.297	0.297	10.1	8	0.793
41	0.315	0.315	10.1	7.98	0.79
42	0.333	0.333	10.1	7.96	0.788
43	0.353	0.353	10.1	7.94	0.786

Trial	Time (minutes)	Adjusted Time (minutes)	Drawdown (decimal feet)	Head (decimal feet)	Head Ratio
44	0.374	0.374	10.1	7.92	0.784
45	0.396	0.396	10	7.9	0.782
46	0.42	0.42	10	7.88	0.781
47	0.445	0.445	10	7.85	0.778
48	0.47	0.47	9.96	7.81	0.774
49	0.496	0.496	9.92	7.77	0.77
50	0.525	0.525	9.88	7.74	0.766
51	0.555	0.555	9.85	7.7	0.763
52	0.586	0.586	9.82	7.68	0.76
53	0.621	0.621	9.79	7.65	0.758
54	0.658	0.658	9.76	7.62	0.755
55	0.696	0.696	9.74	7.59	0.752
56	0.738	0.738	9.71	7.57	0.749
57	0.781	0.781	9.69	7.54	0.747
58	0.828	0.828	9.65	7.51	0.744
59	0.876	0.876	9.63	7.48	0.741
60	0.928	0.928	9.6	7.45	0.738
61	0.983	0.983	9.57	7.42	0.735
62	1.04	1.04	9.54	7.39	0.732
63	1.1	1.1	9.5	7.36	0.729
64	1.17	1.17	9.48	7.33	0.726
65	1.24	1.24	9.44	7.3	0.723
66	1.31	1.31	9.41	7.26	0.719
67	1.39	1.39	9.37	7.23	0.716
68	1.47	1.47	9.33	7.19	0.712
69	1.56	1.56	9.31	7.17	0.71
70	1.65	1.65	9.29	7.14	0.708
71	1.75	1.75	9.27	7.12	0.705
72	1.86	1.86	9.23	7.08	0.702
73	1.97	1.97	9.18	7.04	0.697
74	2.09	2.09	9.13	6.99	0.692
75	2.21	2.21	9.07	6.93	0.686
76	2.34	2.34	9.01	6.87	0.68
77	2.48	2.48	8.95	6.81	0.674
78	2.63	2.63	8.89	6.75	0.668
79	2.79	2.79	8.82	6.68	0.662
80	2.95	2.95	8.75	6.61	0.655
81	3.13	3.13	8.67	6.53	0.647
82	3.32	3.32	8.59	6.45	0.639
83	3.52	3.52	8.5	6.36	0.63
84	3.72	3.72	8.41	6.27	0.621
85	3.95	3.95	8.31	6.17	0.611
86	4.18	4.18	8.21	6.06	0.601
87	4.43	4.43	8.11	5.97	0.591
88	4.69	4.69	8	5.86	0.58
89	4.97	4.97	7.89	5.74	0.569
90	5.27	5.27	7.76	5.62	0.557
91	5.58	5.58	7.63	5.49	0.544
92	5.91	5.91	7.51	5.36	0.531
93	6.27	6.27	7.36	5.22	0.517
94	6.64	6.64	7.22	5.08	0.503
95	7.03	7.03	7.09	4.94	0.49
96	7.45	7.45	6.94	4.79	0.475
97	7.9	7.9	6.79	4.64	0.46
98	8.37	8.37	6.65	4.5	0.446
99	8.86	8.86	6.48	4.34	0.43
100	9.39	9.39	6.33	4.19	0.415
101	9.95	9.95	6.17	4.03	0.399
102	10.5	10.5	6.01	3.87	0.383
103	11.2	11.2	5.85	3.71	0.367
104	11.8	11.8	5.68	3.54	0.351

Trial	Time (minutes)	Adjusted Time (minutes)	Drawdown (decimal feet)	Head (decimal feet)	Head Ratio
105	12.5	12.5	5.5	3.35	0.332
106	13.3	13.3	5.31	3.16	0.314
107	14.1	14.1	5.14	2.99	0.296
108	14.9	14.9	4.95	2.81	0.278
109	15.8	15.8	4.78	2.64	0.262
110	16.7	16.7	4.6	2.46	0.244
111	17.7	17.7	4.41	2.26	0.224
112	18.8	18.8	4.23	2.08	0.206
113	19.9	19.9	4.06	1.91	0.189
114	21.1	21.1	3.88	1.73	0.172
115	22.3	22.3	3.71	1.57	0.156
116	23.6	23.6	3.55	1.41	0.139
117	25.1	25.1	3.41	1.26	0.125
118	26.5	26.5	3.24	1.1	0.109
119	28.1	28.1	3.1	0.96	0.0951
120	29.8	29.8	2.96	0.82	0.0812
121	31.6	31.6	2.82	0.679	0.0673
122	33.4	33.4	2.7	0.557	0.0552
123	35.4	35.4	2.58	0.439	0.0435
124	37.5	37.5	2.48	0.338	0.0335
125	39.7	39.7	2.38	0.233	0.0231
126	42.1	42.1	2.29	0.143	0.0142
127	44.6	44.6	2.21	0.069	0.00684
128	47.2	47.2	2.14	0	0

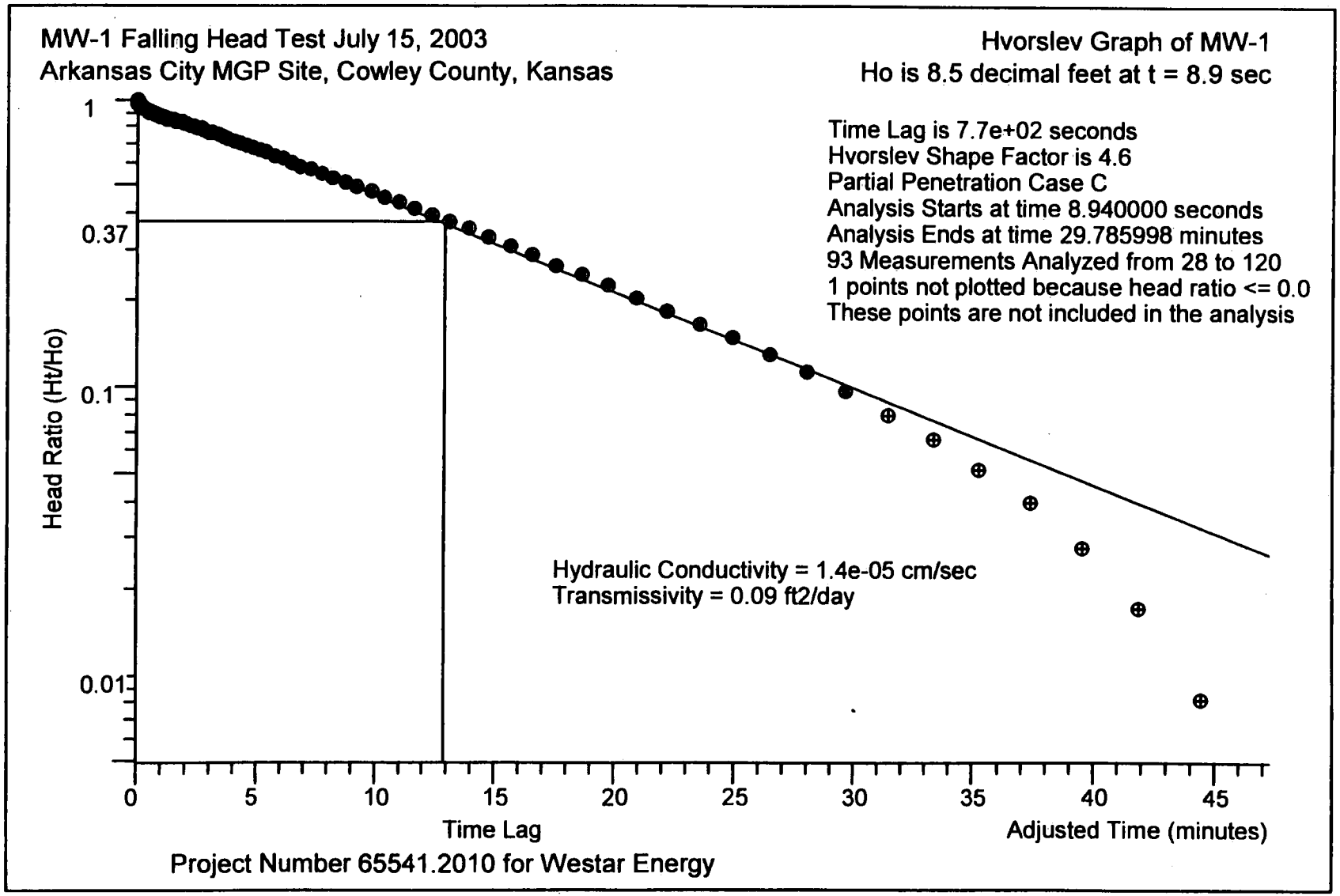
MW-1 Falling Head Test July 15, 2003
Arkansas City MGP Site, Cowley County, Kansas
Hvorslev Graph of MW-1
Ho is 8.5 decimal feet at t = 8.9 sec
Time Lag is 7.7e+02 seconds
Hvorslev Shape Factor is 4.6
Partial Penetration Case C
Analysis Starts at time 8.940000 seconds
Analysis Ends at time 29.785998 minutes
93 Measurements Analyzed from 28 to 120
1 points not plotted because head ratio <= 0.0
These points are not included in the analysis
Head Ratio (Ht/Ho)
1
0.37
0.1
0.01
Hydraulic Conductivity = 1.4e-05 cm/sec
Transmissivity = 0.09 ft2/day
0
5
10
15
20
25
30
35
40
45
Time Lag
Adjusted Time (minutes)
Project Number 65541.2010 for Westar Energy

Data from file: C:\SLUGTE~1\ARKCIT~1\MW2FH#2.SLG
Title: MW-2 Falling Head Test
Site Name: Arkansas City MGP Site,
Location: Cowley County, Kansas
Client: Westar Energy
Project Number: 65541.2010
Test Date: July 15, 2003
Well Number: MW-2
Casing Radius: 0.5 inches
Effective Well Radius: 1.7 inches
Aquifer Thickness: 3.7 feet
Water Table to Screen Bottom: 3.7 feet
Screen Length: 10 feet
Static Water Level: 3.54 decimal feet
K ratio is not entered
There are 102 time and drawdown measurements
Tests starts with trial 2
Time values will be adjusted by 3.47e-06 days (0.300000 seconds)

Trial	Time (minutes)	Adjusted Time (minutes)	Drawdown (decimal feet)	Head (decimal feet)	Head Ratio
1	0	-0.005	8.09	4.55	0.988
2	0.005	0	8.15	4.61	1
3	0.01	0.005	8.02	4.48	0.973
4	0.015	0.01	8.06	4.52	0.981
5	0.02	0.015	8.07	4.53	0.983
6	0.025	0.02	8.03	4.49	0.975
7	0.03	0.025	8.04	4.5	0.977
8	0.035	0.03	8.02	4.48	0.973
9	0.04	0.035	8.02	4.48	0.973
10	0.045	0.04	8.01	4.47	0.972
11	0.05	0.045	7.98	4.44	0.965
12	0.055	0.05	7.98	4.44	0.964
13	0.06	0.055	7.98	4.44	0.964
14	0.065	0.06	7.96	4.42	0.96
15	0.07	0.065	7.95	4.41	0.957
16	0.075	0.07	7.93	4.39	0.954
17	0.08	0.075	7.92	4.38	0.952
18	0.085	0.08	7.9	4.36	0.948
19	0.09	0.085	7.89	4.35	0.945
20	0.095	0.09	7.89	4.35	0.944
21	0.1	0.095	7.88	4.34	0.942
22	0.106	0.101	7.85	4.31	0.936
23	0.112	0.107	7.85	4.31	0.937
24	0.119	0.114	7.84	4.3	0.933
25	0.126	0.121	7.83	4.29	0.932
26	0.133	0.128	7.8	4.26	0.926
27	0.141	0.136	7.79	4.25	0.923
28	0.149	0.144	7.77	4.23	0.918
29	0.158	0.153	7.75	4.2	0.913
30	0.167	0.162	7.7	4.16	0.904
31	0.177	0.172	7.67	4.13	0.898
32	0.188	0.183	7.61	4.07	0.883
33	0.199	0.194	7.51	3.97	0.862
34	0.21	0.205	7.43	3.89	0.846
35	0.223	0.218	7.34	3.8	0.825
36	0.236	0.231	7.25	3.71	0.806
37	0.25	0.245	7.17	3.63	0.789
38	0.265	0.26	7.09	3.55	0.771
39	0.28	0.275	7.03	3.49	0.757
40	0.297	0.292	6.94	3.4	0.739
41	0.315	0.31	6.85	3.31	0.72
42	0.333	0.328	6.77	3.23	0.701
43	0.353	0.348	6.67	3.13	0.681

Trial	Time (minutes)	Adjusted Time (minutes)	Drawdown (decimal feet)	Head (decimal feet)	Head Ratio
44	0.374	0.369	6.59	3.05	0.663
45	0.396	0.391	6.52	2.98	0.647
46	0.42	0.415	6.45	2.91	0.632
47	0.445	0.44	6.4	2.86	0.622
48	0.47	0.465	6.35	2.81	0.61
49	0.496	0.491	6.29	2.75	0.598
50	0.525	0.52	6.24	2.7	0.586
51	0.555	0.55	6.19	2.65	0.575
52	0.586	0.581	6.13	2.59	0.562
53	0.621	0.616	6.07	2.53	0.549
54	0.658	0.653	6.01	2.47	0.536
55	0.696	0.691	5.95	2.41	0.523
56	0.738	0.733	5.88	2.34	0.508
57	0.781	0.776	5.82	2.28	0.495
58	0.828	0.823	5.77	2.23	0.483
59	0.876	0.871	5.71	2.17	0.471
60	0.928	0.923	5.63	2.09	0.454
61	0.983	0.978	5.56	2.02	0.439
62	1.04	1.04	5.48	1.94	0.421
63	1.1	1.1	5.39	1.85	0.401
64	1.17	1.16	5.3	1.76	0.383
65	1.24	1.23	5.21	1.67	0.363
66	1.31	1.31	5.11	1.57	0.342
67	1.39	1.39	5.01	1.47	0.319
68	1.47	1.47	4.89	1.35	0.294
69	1.56	1.56	4.77	1.23	0.267
70	1.65	1.65	4.66	1.12	0.242
71	1.75	1.75	4.54	1	0.218
72	1.86	1.85	4.45	0.911	0.198
73	1.97	1.96	4.37	0.826	0.179
74	2.09	2.08	4.33	0.789	0.171
75	2.21	2.21	4.25	0.706	0.153
76	2.34	2.34	4.22	0.675	0.147
77	2.48	2.48	4.17	0.629	0.137
78	2.63	2.63	4.13	0.587	0.127
79	2.79	2.78	4.09	0.552	0.12
80	2.95	2.95	4.04	0.504	0.109
81	3.13	3.13	3.96	0.417	0.0906
82	3.32	3.31	3.91	0.367	0.0797
83	3.52	3.51	3.87	0.329	0.0714
84	3.72	3.72	3.83	0.294	0.0638
85	3.95	3.94	3.79	0.25	0.0543
86	4.18	4.18	3.75	0.21	0.0456
87	4.43	4.42	3.72	0.179	0.0389
88	4.69	4.69	3.71	0.168	0.0365
89	4.97	4.97	3.7	0.156	0.0339
90	5.27	5.26	3.67	0.13	0.0282
91	5.58	5.58	3.66	0.12	0.0261
92	5.91	5.91	3.65	0.105	0.0228
93	6.27	6.26	3.63	0.09	0.0195
94	6.64	6.64	3.61	0.073	0.0159
95	7.03	7.03	3.6	0.06	0.013
96	7.45	7.45	3.59	0.049	0.0106
97	7.9	7.89	3.58	0.038	0.00825
98	8.37	8.36	3.57	0.032	0.00695
99	8.86	8.86	3.56	0.021	0.00456
100	9.39	9.39	3.55	0.014	0.00304
101	9.95	9.94	3.55	0.007	0.00152
102	10.5	10.5	3.54	-0.002	-0.000434

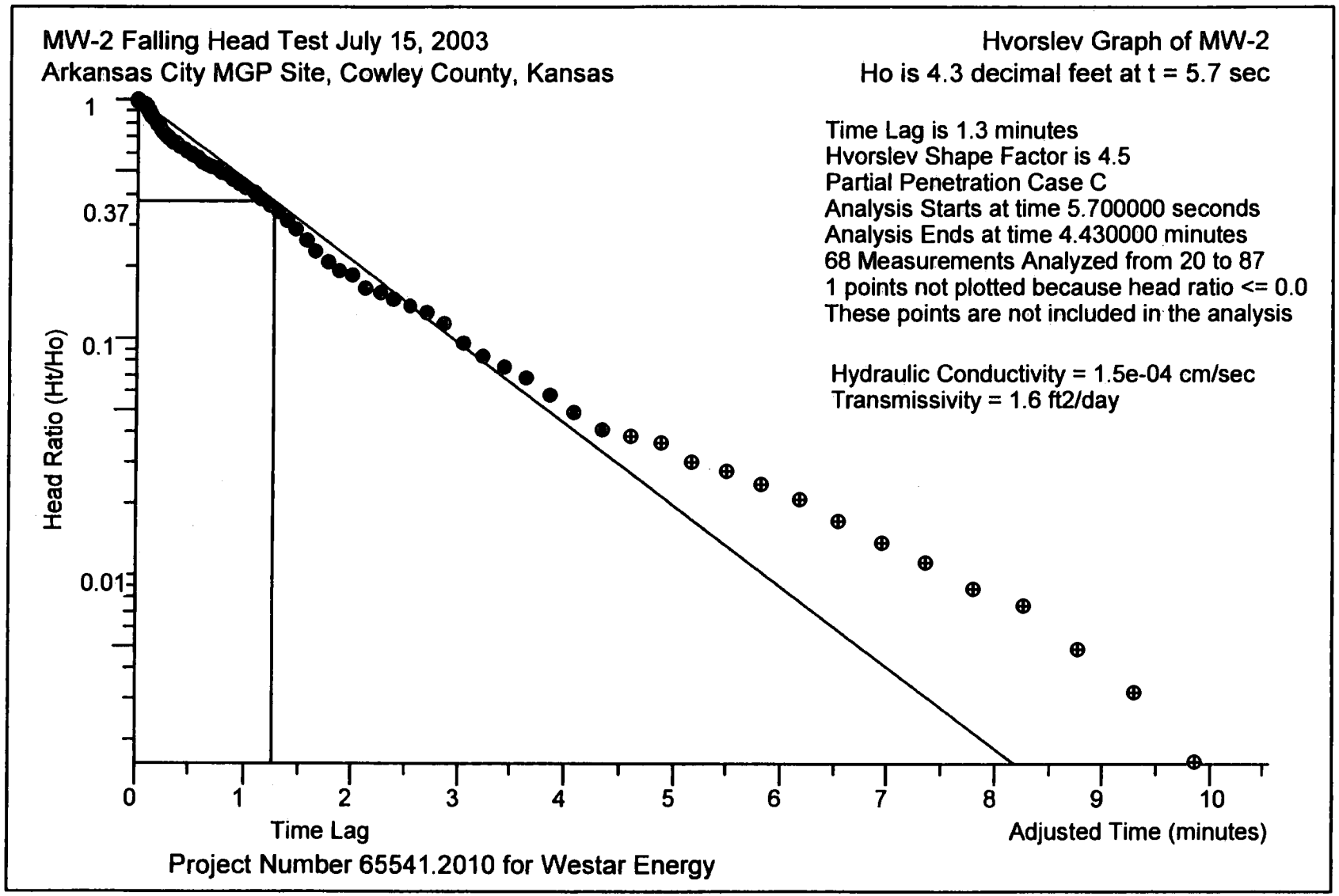
MW-2 Falling Head Test July 15, 2003
Arkansas City MGP Site, Cowley County, Kansas
Hvorslev Graph of MW-2
Ho is 4.3 decimal feet at t = 5.7 sec
Time Lag is 1.3 minutes
Hvorslev Shape Factor is 4.5
Partial Penetration Case C
Analysis Starts at time 5.700000 seconds
Analysis Ends at time 4.430000 minutes
68 Measurements Analyzed from 20 to 87
1 points not plotted because head ratio <= 0.0
These points are not included in the analysis
Hydraulic Conductivity = 1.5e-04 cm/sec
Transmissivity = 1.6 ft2/day
Head Ratio (Ht/Ho)
1
0.37
0.1
0.01
0
1
2
3
4
5
6
7
8
9
10
Time Lag
Adjusted Time (minutes)
Project Number 65541.2010 for Westar Energy

Data from file: C:\SLUGTE~1\ARKCIT~1\MW3FH#2.SLG
Title: MW-3 Falling Head Test
Site Name: Arkansas City MGP Site,
Location: Cowley County, Kansas
Client: Westar Energy
Project Number: 65541.2010
Test Date: July 15, 2003
Well Number: MW-3
Casing Radius: 0.5 inches
Effective Well Radius: 1.75 inches
Aquifer Thickness: 9.64 feet
Water Table to Screen Bottom: 9.64 feet
Screen Length: 15 feet
Static Water Level: 9.63 decimal feet
K ratio is not entered
There are 97 time and drawdown measurements
Tests starts with trial 2
Time values will be adjusted by 3.47e-06 days (0.300000 seconds)

Trial	Time (minutes)	Adjusted Time (minutes)	Drawdown (decimal feet)	Head (decimal feet)	Head Ratio
1	0	-0.005	11.2	1.55	0.99
2	0.005	0	11.2	1.57	1
3	0.01	0.005	11.2	1.55	0.988
4	0.015	0.01	11.1	1.43	0.909
5	0.02	0.015	11	1.34	0.853
6	0.025	0.02	10.9	1.24	0.792
7	0.03	0.025	10.8	1.2	0.764
8	0.035	0.03	10.9	1.24	0.791
9	0.04	0.035	10.9	1.25	0.795
10	0.045	0.04	10.8	1.21	0.771
11	0.05	0.045	10.8	1.17	0.743
12	0.055	0.05	10.8	1.13	0.72
13	0.06	0.055	10.7	1.11	0.705
14	0.065	0.06	10.7	1.09	0.697
15	0.07	0.065	10.7	1.08	0.69
16	0.075	0.07	10.7	1.07	0.685
17	0.08	0.075	10.7	1.06	0.677
18	0.085	0.08	10.7	1.05	0.67
19	0.09	0.085	10.7	1.04	0.663
20	0.095	0.09	10.7	1.03	0.657
21	0.1	0.095	10.7	1.03	0.655
22	0.106	0.101	10.6	1.02	0.648
23	0.112	0.107	10.6	1.01	0.642
24	0.119	0.114	10.6	0.999	0.637
25	0.126	0.121	10.6	0.989	0.63
26	0.133	0.128	10.6	0.976	0.622
27	0.141	0.136	10.6	0.964	0.614
28	0.149	0.144	10.6	0.954	0.608
29	0.158	0.153	10.6	0.943	0.601
30	0.167	0.162	10.6	0.926	0.59
31	0.177	0.172	10.5	0.912	0.581
32	0.188	0.183	10.5	0.899	0.573
33	0.199	0.194	10.5	0.886	0.565
34	0.21	0.205	10.5	0.872	0.556
35	0.223	0.218	10.5	0.859	0.547
36	0.236	0.231	10.5	0.845	0.539
37	0.25	0.245	10.5	0.832	0.53
38	0.265	0.26	10.4	0.817	0.521
39	0.28	0.275	10.4	0.801	0.511
40	0.297	0.292	10.4	0.79	0.504
41	0.315	0.31	10.4	0.774	0.493
42	0.333	0.328	10.4	0.761	0.485
43	0.353	0.348	10.4	0.744	0.474

Trial	Time (minutes)	Adjusted Time (minutes)	Drawdown (decimal feet)	Head (decimal feet)	Head Ratio
44	0.374	0.369	10.4	0.725	0.462
45	0.396	0.391	10.3	0.707	0.451
46	0.42	0.415	10.3	0.688	0.438
47	0.445	0.44	10.3	0.679	0.433
48	0.47	0.465	10.3	0.667	0.425
49	0.496	0.491	10.3	0.656	0.418
50	0.525	0.52	10.3	0.644	0.41
51	0.555	0.55	10.3	0.633	0.403
52	0.586	0.581	10.2	0.619	0.395
53	0.621	0.616	10.2	0.604	0.385
54	0.658	0.653	10.2	0.587	0.374
55	0.696	0.691	10.2	0.567	0.361
56	0.738	0.733	10.2	0.552	0.352
57	0.781	0.776	10.2	0.539	0.344
58	0.828	0.823	10.1	0.519	0.331
59	0.876	0.871	10.1	0.504	0.321
60	0.928	0.923	10.1	0.487	0.31
61	0.983	0.978	10.1	0.468	0.298
62	1.04	1.04	10.1	0.452	0.288
63	1.1	1.1	10.1	0.433	0.276
64	1.17	1.16	10	0.414	0.264
65	1.24	1.23	10	0.395	0.252
66	1.31	1.31	10	0.374	0.238
67	1.39	1.39	9.98	0.353	0.225
68	1.47	1.47	9.96	0.332	0.212
69	1.56	1.56	9.94	0.309	0.197
70	1.65	1.65	9.91	0.282	0.18
71	1.75	1.75	9.89	0.257	0.164
72	1.86	1.85	9.86	0.232	0.148
73	1.97	1.96	9.84	0.211	0.134
74	2.09	2.08	9.82	0.19	0.121
75	2.21	2.21	9.8	0.171	0.109
76	2.34	2.34	9.78	0.153	0.0975
77	2.48	2.48	9.77	0.136	0.0867
78	2.63	2.63	9.75	0.123	0.0784
79	2.79	2.78	9.74	0.111	0.0707
80	2.95	2.95	9.73	0.1	0.0637
81	3.13	3.13	9.72	0.092	0.0586
82	3.32	3.31	9.71	0.082	0.0523
83	3.52	3.51	9.7	0.075	0.0478
84	3.72	3.72	9.69	0.065	0.0414
85	3.95	3.94	9.69	0.058	0.037
86	4.18	4.18	9.68	0.052	0.0331
87	4.43	4.42	9.68	0.046	0.0293
88	4.69	4.69	9.67	0.037	0.0236
89	4.97	4.97	9.67	0.036	0.0229
90	5.27	5.26	9.65	0.025	0.0159
91	5.58	5.58	9.65	0.019	0.0121
92	5.91	5.91	9.64	0.014	0.00892
93	6.27	6.26	9.64	0.01	0.00637
94	6.64	6.64	9.64	0.006	0.00382
95	7.03	7.03	9.63	0.002	0.00127
96	7.45	7.45	9.63	-0.002	-0.00127
97	7.9	7.89	9.63	-0.004	-0.00255

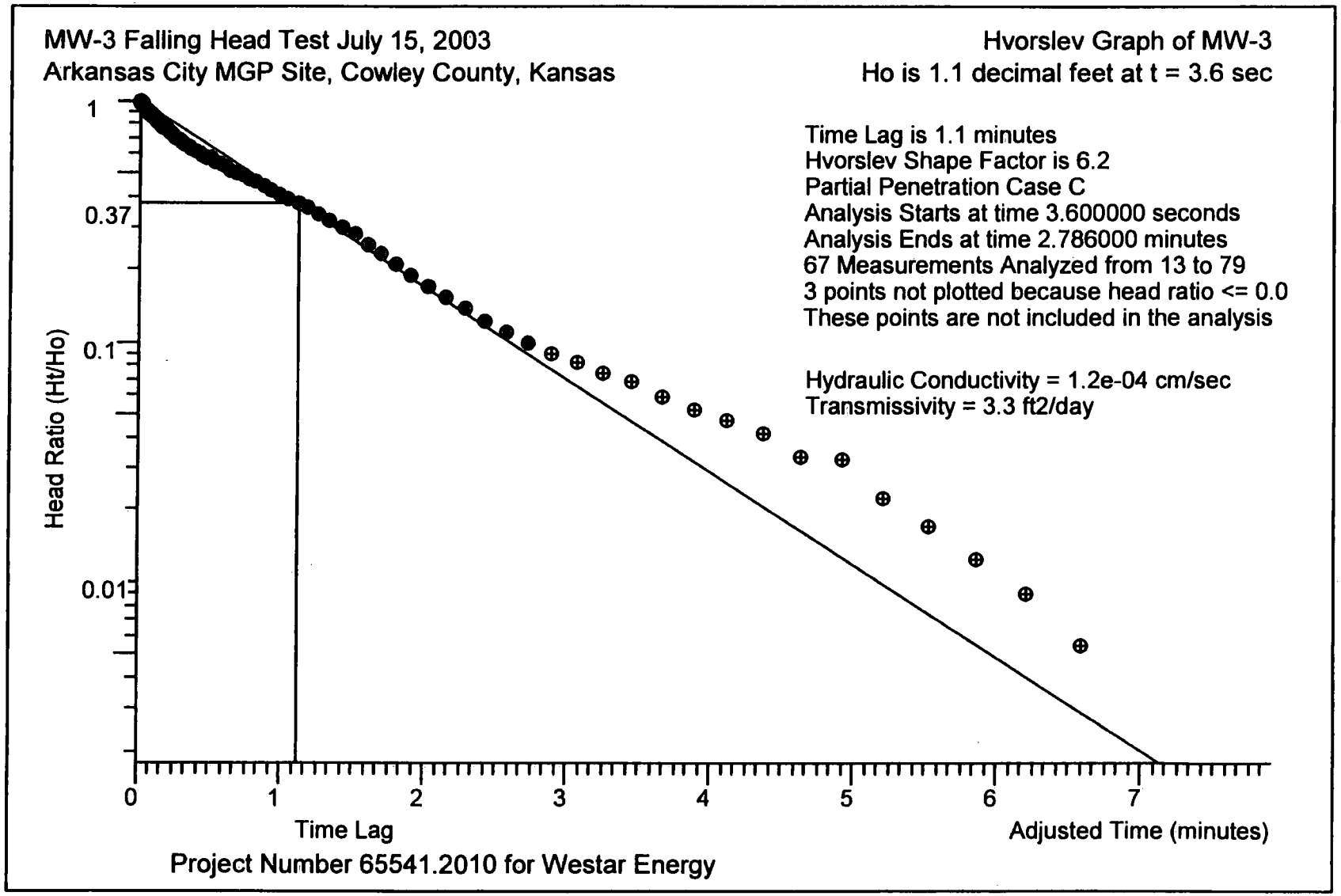
MW-3 Falling Head Test July 15, 2003
Arkansas City MGP Site, Cowley County, Kansas
Hvorslev Graph of MW-3
Ho is 1.1 decimal feet at t = 3.6 sec
Time Lag is 1.1 minutes
Hvorslev Shape Factor is 6.2
Partial Penetration Case C
Analysis Starts at time 3.600000 seconds
Analysis Ends at time 2.786000 minutes
67 Measurements Analyzed from 13 to 79
3 points not plotted because head ratio <= 0.0
These points are not included in the analysis
Hydraulic Conductivity = 1.2e-04 cm/sec
Transmissivity = 3.3 ft2/day
Head Ratio (Ht/Ho)
1
0.37
0.1
0.01
0
1
2
3
4
5
6
7
Time Lag
Adjusted Time (minutes)
Project Number 65541.2010 for Westar Energy

Data from file: C:\SLUGTE~1\ARKCIT~1\MW5FH#2.SLG
Title: MW-5 Falling Head Test
Site Name: Arkansas City MGP Site,
Location: Cowley County, Kansas
Client: Westar Energy
Project Number: 65541.2010
Test Date: July 15, 2003
Well Number: MW-5
Casing Radius: 0.5 inches
Effective Well Radius: 1.75 inches
Aquifer Thickness: 0.88 feet
Water Table to Screen Bottom: 0.88 feet
Screen Length: 10 feet
Static Water Level: 0.84 decimal feet
K ratio is not entered
There are 105 time and drawdown measurements
Tests starts with trial 1
Time values will be adjusted by 0 days (0.000000 seconds)

Trial	Time (minutes)	Adjusted Time (minutes)	Drawdown (decimal feet)	Head (decimal feet)	Head Ratio
1	0	0	3.18	2.34	1
2	0.005	0.005	3.07	2.22	0.95
3	0.01	0.01	2.9	2.06	0.881
4	0.015	0.015	2.79	1.95	0.834
5	0.02	0.02	2.55	1.7	0.728
6	0.025	0.025	2.42	1.58	0.673
7	0.03	0.03	2.35	1.51	0.645
8	0.035	0.035	2.37	1.53	0.653
9	0.04	0.04	2.31	1.47	0.629
10	0.045	0.045	2.27	1.43	0.609
11	0.05	0.05	2.23	1.39	0.593
12	0.055	0.055	2.15	1.31	0.558
13	0.06	0.06	2.21	1.37	0.584
14	0.065	0.065	2.15	1.31	0.557
15	0.07	0.07	2.09	1.25	0.532
16	0.075	0.075	2.04	1.2	0.511
17	0.08	0.08	1.99	1.15	0.493
18	0.085	0.085	1.96	1.12	0.477
19	0.09	0.09	1.93	1.09	0.464
20	0.095	0.095	1.9	1.06	0.452
21	0.1	0.1	1.88	1.04	0.442
22	0.106	0.106	1.85	1.01	0.433
23	0.112	0.112	1.83	0.992	0.423
24	0.119	0.119	1.81	0.972	0.415
25	0.126	0.126	1.79	0.953	0.407
26	0.133	0.133	1.78	0.937	0.4
27	0.141	0.141	1.76	0.92	0.393
28	0.149	0.149	1.74	0.904	0.386
29	0.158	0.158	1.73	0.889	0.379
30	0.167	0.167	1.71	0.871	0.372
31	0.177	0.177	1.7	0.859	0.367
32	0.188	0.188	1.69	0.846	0.361
33	0.199	0.199	1.67	0.83	0.354
34	0.21	0.21	1.66	0.82	0.35
35	0.223	0.223	1.65	0.807	0.344
36	0.236	0.236	1.63	0.793	0.338
37	0.25	0.25	1.62	0.783	0.334
38	0.265	0.265	1.61	0.771	0.329
39	0.28	0.28	1.6	0.759	0.324
40	0.297	0.297	1.59	0.745	0.318
41	0.315	0.315	1.57	0.733	0.313
42	0.333	0.333	1.56	0.719	0.307
43	0.353	0.353	1.54	0.704	0.3

Trial	Time (minutes)	Adjusted Time (minutes)	Drawdown (decimal feet)	Head (decimal feet)	Head Ratio
44	0.374	0.374	1.54	0.701	0.299
45	0.396	0.396	1.52	0.683	0.292
46	0.42	0.42	1.51	0.665	0.284
47	0.445	0.445	1.49	0.648	0.277
48	0.47	0.47	1.47	0.63	0.269
49	0.496	0.496	1.45	0.612	0.261
50	0.525	0.525	1.43	0.592	0.253
51	0.555	0.555	1.41	0.574	0.245
52	0.586	0.586	1.39	0.554	0.236
53	0.621	0.621	1.37	0.534	0.228
54	0.658	0.658	1.35	0.512	0.219
55	0.696	0.696	1.33	0.49	0.209
56	0.738	0.738	1.3	0.465	0.198
57	0.781	0.781	1.29	0.447	0.191
58	0.828	0.828	1.26	0.421	0.18
59	0.876	0.876	1.24	0.399	0.17
60	0.928	0.928	1.22	0.379	0.162
61	0.983	0.983	1.2	0.358	0.153
62	1.04	1.04	1.18	0.336	0.143
63	1.1	1.1	1.16	0.316	0.135
64	1.17	1.17	1.14	0.296	0.126
65	1.24	1.24	1.11	0.274	0.117
66	1.31	1.31	1.09	0.253	0.108
67	1.39	1.39	1.08	0.235	0.1
68	1.47	1.47	1.05	0.209	0.0892
69	1.56	1.56	1.04	0.202	0.0862
70	1.65	1.65	1.03	0.19	0.0811
71	1.75	1.75	1.02	0.177	0.0755
72	1.86	1.86	1	0.163	0.0696
73	1.97	1.97	0.99	0.15	0.064
74	2.09	2.09	0.982	0.142	0.0606
75	2.21	2.21	0.971	0.131	0.0559
76	2.34	2.34	0.965	0.125	0.0534
77	2.48	2.48	0.956	0.116	0.0495
78	2.63	2.63	0.948	0.108	0.0461
79	2.79	2.79	0.941	0.101	0.0431
80	2.95	2.95	0.937	0.097	0.0414
81	3.13	3.13	0.929	0.089	0.038
82	3.32	3.32	0.925	0.085	0.0363
83	3.52	3.52	0.918	0.078	0.0333
84	3.72	3.72	0.911	0.071	0.0303
85	3.95	3.95	0.905	0.065	0.0277
86	4.18	4.18	0.901	0.061	0.026
87	4.43	4.43	0.895	0.055	0.0235
88	4.69	4.69	0.891	0.051	0.0218
89	4.97	4.97	0.888	0.048	0.0205
90	5.27	5.27	0.884	0.044	0.0188
91	5.58	5.58	0.879	0.039	0.0166
92	5.91	5.91	0.875	0.035	0.0149
93	6.27	6.27	0.872	0.032	0.0137
94	6.64	6.64	0.869	0.029	0.0124
95	7.03	7.03	0.866	0.026	0.0111
96	7.45	7.45	0.863	0.023	0.00982
97	7.9	7.9	0.862	0.022	0.00939
98	8.37	8.37	0.855	0.015	0.0064
99	8.86	8.86	0.853	0.013	0.00555
100	9.39	9.39	0.85	0.01	0.00427
101	9.95	9.95	0.849	0.009	0.00384
102	10.5	10.5	0.847	0.007	0.00299
103	11.2	11.2	0.842	0.002	0.000854
104	11.8	11.8	0.842	0.002	0.000854

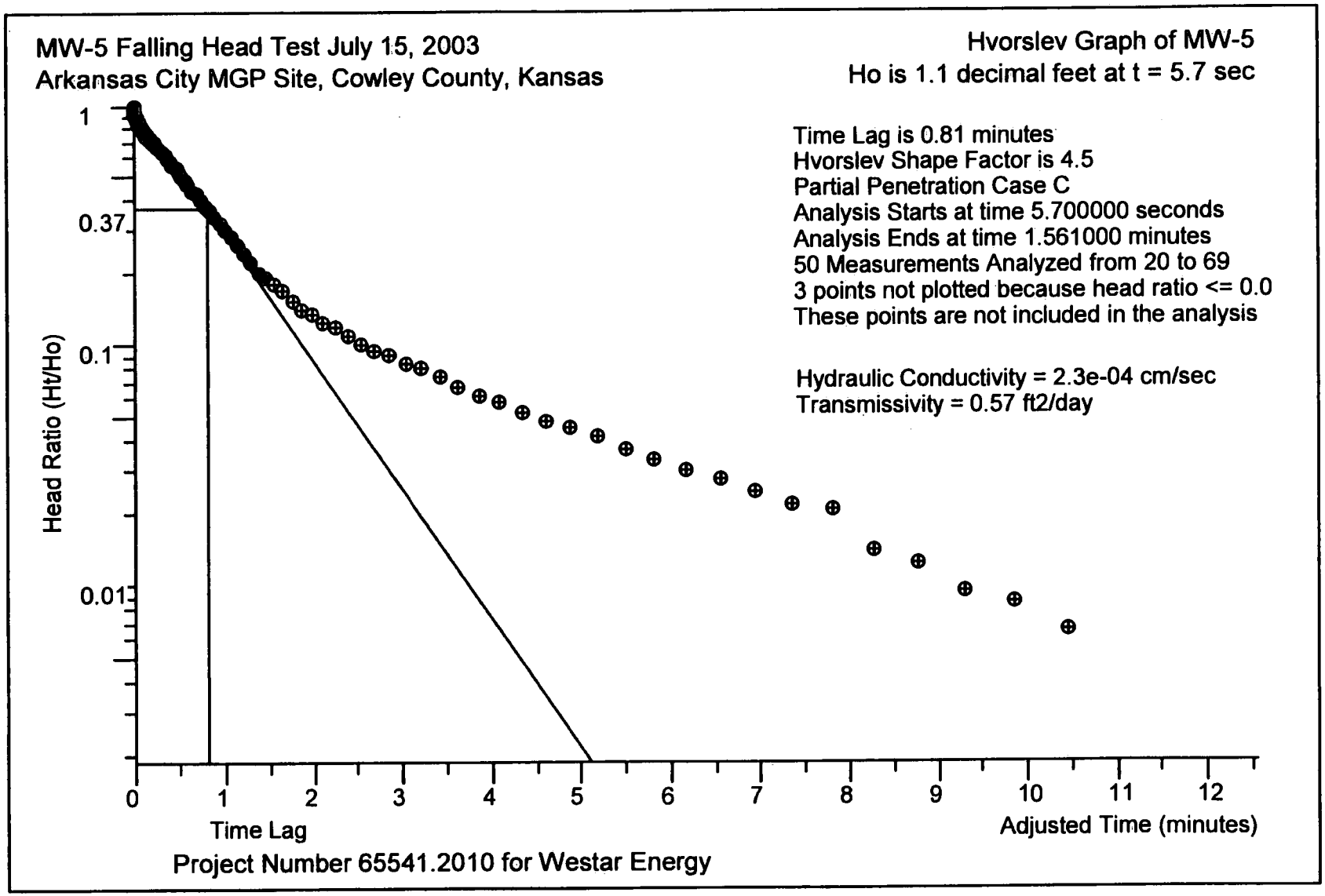
MW-5 Falling Head Test July 15, 2003
Arkansas City MGP Site, Cowley County, Kansas
Hvorslev Graph of MW-5
Ho is 1.1 decimal feet at t = 5.7 sec
Time Lag is 0.81 minutes
Hvorslev Shape Factor is 4.5
Partial Penetration Case C
Analysis Starts at time 5.700000 seconds
Analysis Ends at time 1.561000 minutes
50 Measurements Analyzed from 20 to 69
3 points not plotted because head ratio <= 0.0
These points are not included in the analysis
Hydraulic Conductivity = 2.3e-04 cm/sec
Transmissivity = 0.57 ft2/day
Head Ratio (Ht/Ho)
1
0.37
0.1
0.01
0
1
2
3
4
5
6
7
8
9
10
11
12
Time Lag
Adjusted Time (minutes)
Project Number 65541.2010 for Westar Energy

APPENDIX E

SOIL ANALYTICAL RESULTS

Soil Samples Collected During the Remedial Investigation

Sample Number	Sample Description
ACDRUMS01P	Sample from drum of soil cuttings
ACMW1S01P	Shallow soil sample from the probe for well MW-1
ACMW1S02P	Deep soil sample from the probe for well MW-1
ACMW2S01P	Shallow soil sample from the probe for well MW-2
ACMW2S02P	Deep soil sample from the probe for well MW-2
ACMW3S01P	Shallow soil sample from the probe for well MW-3
ACMW3S02P	Deep soil sample from the probe for well MW-3
ACMW3SS1S01P	Surface soil sample from the probe for well MW-3
ACMW4S01P	Shallow soil sample from the probe for well MW-4
ACMW4S02P	Deep soil sample from the probe for well MW-4
ACMW4SS1S01P	Surface soil sample from the probe for well MW-4
ACSP10S01P	Shallow soil sample from probe SP-10
ACSP10S02P	Deep soil sample from probe SP-10
ACSP10S01S01P	Surface soil sample from probe SP-10
ACSP11S01P	Shallow soil sample from probe SP-11
ACSP11S02P	Deep soil sample from probe SP-11
ACSP12S01P	Shallow soil sample from probe SP-12
ACSP12S02P	Deep soil sample from probe SP-12
ACSP13S01P	Shallow soil sample from probe SP-13
ACSP13S02P	Deep soil sample from probe SP-13
ACSP14S01P	Shallow soil sample from probe SP-14
ACSP14S02P	Deep soil sample from probe SP-14
ACSP15S01P	Shallow soil sample from probe SP-15
ACSP15S02P	Deep soil sample from probe SP-15
ACSP16S01P	Shallow soil sample from probe SP-16
ACSP16S02P	Deep soil sample from probe SP-16
ACSP16SS1S01P	Surface soil sample from probe SP-16
ACSP17S01D	Duplicate shallow soil sample from probe SP-17
ACSP17S01P	Primary shallow soil sample from probe SP-17
ACSP17S02P	Deep soil sample from probe SP-17
ACSP17SS1S01P	Surface soil sample from probe SP-17
ACSP18S01P	Primary shallow soil sample from probe SP-18
ACSP18S02P	Deep soil sample from probe SP-18
ACSP1S01P	Primary shallow soil sample from probe SP-1
ACSP1S02P	Deep soil sample from probe SP-1
ACSP2S01P	Primary shallow soil sample from probe SP-2
ACSP2S02P	Deep soil sample from probe SP-2
ACSP3S01P	Primary shallow soil sample from probe SP-3
ACSP3S02P	Deep soil sample from probe SP-3
ACSP4S01P	Primary shallow soil sample from probe SP-4
ACSP4S02P	Deep soil sample from probe SP-4

ACSP5S01P	Primary shallow soil sample from probe SP-5
ACSP5S02P	Deep soil sample from probe SP-5
ACSP6S01P	Primary shallow soil sample from probe SP-6
ACSP6S02P	Deep soil sample from probe SP-6
ACSP7S01D	Duplicate shallow soil sample from probe SP-17
ACSP7S01P	Primary shallow soil sample from probe SP-17
ACSP7S02P	Deep soil sample from probe SP-7
ACSP7SS1S01P	Surface soil sample from probe SP-7
ACSP8S01P	Primary shallow soil sample from probe SP-8
ACSP8S02P	Deep soil sample from probe SP-8
ACSP8SS1S01P	Surface soil sample from probe SP-8
ACSP9S01P	Primary shallow soil sample from probe SP-9
ACSP9S02P	Deep soil sample from probe SP-9

APPENDIX E
SOIL ANALYTICAL RESULTS
Remedial Investigation Report
Arkansas City MGP Site

Sample Location	Date	Parameter	conc		Units	Reporting Limit[1]	Method
ACDRUMS01P	7/9/2003	Cyanide	0.51		mg/kg	0.0567	EPA 335.3
ACDRUMS01P	7/9/2003	Arsenic	3.36	J	mg/kg	0.923	EPA 6010
ACDRUMS01P	7/9/2003	Barium	52.9	J	mg/kg	0.923	EPA 6010
ACDRUMS01P	7/9/2003	Cadmium	ND	U J	mg/kg	0.461	EPA 6010
ACDRUMS01P	7/9/2003	Chromium	6.64	J	mg/kg	0.461	EPA 6010
ACDRUMS01P	7/9/2003	Lead	17.2	J	mg/kg	0.461	EPA 6010
ACDRUMS01P	7/9/2003	Selenium	3.03	J	mg/kg	1.38	EPA 6010
ACDRUMS01P	7/9/2003	Silver	ND		mg/kg	0.646	EPA 6010
ACDRUMS01P	7/9/2003	Mercury	ND	U J	mg/kg	0.159	EPA 7471
ACDRUMS01P	7/9/2003	4,4'-DDD	0.0044	J	mg/kg	0.0037	EPA 8081A
ACDRUMS01P	7/9/2003	4,4'-DDE	ND		mg/kg	0.0037	EPA 8081A
ACDRUMS01P	7/9/2003	4,4'-DDT	ND		mg/kg	0.0037	EPA 8081A
ACDRUMS01P	7/9/2003	Aldrin	0.0048	R	mg/kg	0.0019	EPA 8081A
ACDRUMS01P	7/9/2003	alpha-BHC	ND		mg/kg	0.0019	EPA 8081A
ACDRUMS01P	7/9/2003	alpha-Chlordane	0.0083	R	mg/kg	0.0019	EPA 8081A
ACDRUMS01P	7/9/2003	beta-BHC	ND		mg/kg	0.0019	EPA 8081A
ACDRUMS01P	7/9/2003	Chlordane	0.036	J	mg/kg	0.0076	EPA 8081A
ACDRUMS01P	7/9/2003	delta-BHC	ND		mg/kg	0.0019	EPA 8081A
ACDRUMS01P	7/9/2003	Dieldrin	ND		mg/kg	0.0037	EPA 8081A
ACDRUMS01P	7/9/2003	Endosulfan I	ND		mg/kg	0.0019	EPA 8081A
ACDRUMS01P	7/9/2003	Endosulfan II	ND		mg/kg	0.0037	EPA 8081A
ACDRUMS01P	7/9/2003	Endosulfan sulfate	ND		mg/kg	0.019	EPA 8081A
ACDRUMS01P	7/9/2003	Endrin	ND		mg/kg	0.0037	EPA 8081A
ACDRUMS01P	7/9/2003	Endrin aldehyde	ND		mg/kg	0.0037	EPA 8081A
ACDRUMS01P	7/9/2003	Endrin ketone	0.0053		mg/kg	0.0037	EPA 8081A
ACDRUMS01P	7/9/2003	gamma-BHC (Lindane)	ND		mg/kg	0.0019	EPA 8081A
ACDRUMS01P	7/9/2003	gamma-Chlordane	ND		mg/kg	0.0019	EPA 8081A
ACDRUMS01P	7/9/2003	Heptachlor	ND		mg/kg	0.0019	EPA 8081A
ACDRUMS01P	7/9/2003	Heptachlor epoxide	ND		mg/kg	0.0019	EPA 8081A
ACDRUMS01P	7/9/2003	Methoxychlor	ND		mg/kg	0.019	EPA 8081A
ACDRUMS01P	7/9/2003	Toxaphene	ND		mg/kg	0.094	EPA 8081A
ACDRUMS01P	7/9/2003	1,I,1,2-Tetrachloroethane	ND		mg/kg	0.71	EPA 8260
ACDRUMS01P	7/9/2003	1,1,1-Trichloroethane	ND		mg/kg	0.71	EPA 8260
ACDRUMS01P	7/9/2003	1,1,2,2-Tetrachloroethane	ND		mg/kg	0.71	EPA 8260
ACDRUMS01P	7/9/2003	1,1,2-Trichloroethane	ND		mg/kg	0.71	EPA 8260
ACDRUMS01P	7/9/2003	1,1-Dichloroethane	ND		mg/kg	0.71	EPA 8260
ACDRUMS01P	7/9/2003	1,1-Dichloroethene	ND		mg/kg	0.71	EPA 8260
ACDRUMS01P	7/9/2003	1,1-Dichloropropene	ND		mg/kg	0.71	EPA 8260
ACDRUMS01P	7/9/2003	1,2,3-Trichlorobenzene	ND		mg/kg	0.71	EPA 8260
ACDRUMS01P	7/9/2003	1,2,3-Trichloropropane	ND		mg/kg	0.71	EPA 8260
ACDRUMS01P	7/9/2003	1,2,4-Trichlorobenzene	ND	U J	mg/kg	0.71	EPA 8260
ACDRUMS01P	7/9/2003	1,2,4-Trimethylbenzene	ND		mg/kg	0.71	EPA 8260
ACDRUMS01P	7/9/2003	1,2-Dibromo-3-chloropropane	ND		mg/kg	0.71	EPA 8260
ACDRUMS01P	7/9/2003	1,2-Dibromoethane (EDB)	ND		mg/kg	0.71	EPA 8260
ACDRUMS01P	7/9/2003	1,2-Dichlorobenzene	ND		mg/kg	0.71	EPA 8260
ACDRUMS01P	7/9/2003	1,2-Dichloroethane	ND		mg/kg	0.71	EPA 8260

APPENDIX E
SOIL ANALYTICAL RESULTS
Remedial Investigation Report
Arkansas City MGP Site

Sample Location	Date	Parameter	conc		Units	Reporting Limit[1]	Method
ACDRUMS01P	7/9/2003	1,2-Dichloropropane	ND		mg/kg	0.71	EPA 8260
ACDRUMS01P	7/9/2003	1,3,5-Trimethylbenzene	ND		mg/kg	0.71	EPA 8260
ACDRUMS01P	7/9/2003	1,3-Dichlorobenzene	ND	U J	mg/kg	0.71	EPA 8260
ACDRUMS01P	7/9/2003	1,3-Dichloropropane	ND		mg/kg	0.71	EPA 8260
ACDRUMS01P	7/9/2003	1,4-Dichlorobenzene	ND	U J	mg/kg	0.71	EPA 8260
ACDRUMS01P	7/9/2003	2,2-Dichloropropane	ND		mg/kg	0.71	EPA 8260
ACDRUMS01P	7/9/2003	2-Butanone (MEK)	ND		mg/kg	1.4	EPA 8260
ACDRUMS01P	7/9/2003	2-Chloroethylvinyl ether	ND		mg/kg	0.71	EPA 8260
ACDRUMS01P	7/9/2003	2-Chlorotoluene	ND		mg/kg	0.71	EPA 8260
ACDRUMS01P	7/9/2003	2-Hexanone	ND		mg/kg	14	EPA 8260
ACDRUMS01P	7/9/2003	4-Chlorotoluene	ND	U J	mg/kg	0.71	EPA 8260
ACDRUMS01P	7/9/2003	4-Methyl-2-pentanone (MIBK)	ND		mg/kg	1.4	EPA 8260
ACDRUMS01P	7/9/2003	Acetone	ND		mg/kg	2.8	EPA 8260
ACDRUMS01P	7/9/2003	Benzene	ND		mg/kg	0.71	EPA 8260
ACDRUMS01P	7/9/2003	Bromobenzene	ND		mg/kg	0.71	EPA 8260
ACDRUMS01P	7/9/2003	Bromochloromethane	ND		mg/kg	0.71	EPA 8260
ACDRUMS01P	7/9/2003	Bromodichloromethane	ND		mg/kg	0.71	EPA 8260
ACDRUMS01P	7/9/2003	Bromoform	ND		mg/kg	0.71	EPA 8260
ACDRUMS01P	7/9/2003	Bromomethane	ND		mg/kg	0.71	EPA 8260
ACDRUMS01P	7/9/2003	Carbon tetrachloride	ND		mg/kg	0.71	EPA 8260
ACDRUMS01P	7/9/2003	Chlorobenzene	ND		mg/kg	0.71	EPA 8260
ACDRUMS01P	7/9/2003	Chloroethane	ND		mg/kg	0.71	EPA 8260
ACDRUMS01P	7/9/2003	Chloroform	ND		mg/kg	0.71	EPA 8260
ACDRUMS01P	7/9/2003	Chloromethane	ND	U J	mg/kg	0.71	EPA 8260
ACDRUMS01P	7/9/2003	cis-1,2-Dichloroethene	ND		mg/kg	0.71	EPA 8260
ACDRUMS01P	7/9/2003	cis-1,3-Dichloropropene	ND		mg/kg	0.71	EPA 8260
ACDRUMS01P	7/9/2003	Dibromochloromethane	ND		mg/kg	0.71	EPA 8260
ACDRUMS01P	7/9/2003	Dibromomethane	ND		mg/kg	0.71	EPA 8260
ACDRUMS01P	7/9/2003	Dichlorodifluoromethane	ND	U J	mg/kg	0.71	EPA 8260
ACDRUMS01P	7/9/2003	Ethylbenzene	ND		mg/kg	0.71	EPA 8260
ACDRUMS01P	7/9/2003	Hexachloro-1,3-butadiene	ND	U J	mg/kg	0.71	EPA 8260
ACDRUMS01P	7/9/2003	Isopropylbenzene	ND		mg/kg	0.71	EPA 8260
ACDRUMS01P	7/9/2003	m/p-xylene	ND		mg/kg	0.71	EPA 8260
ACDRUMS01P	7/9/2003	Methyl tert-butyl ether	ND		mg/kg	0.71	EPA 8260
ACDRUMS01P	7/9/2003	Methylene chloride	ND		mg/kg	0.71	EPA 8260
ACDRUMS01P	7/9/2003	Naphthalene	14		mg/kg	1.4	EPA 8260
ACDRUMS01P	7/9/2003	n-Butylbenzene	ND	U J	mg/kg	0.71	EPA 8260
ACDRUMS01P	7/9/2003	n-Propylbenzene	ND		mg/kg	0.71	EPA 8260
ACDRUMS01P	7/9/2003	o-Xylene	ND		mg/kg	0.71	EPA 8260
ACDRUMS01P	7/9/2003	p-Isopropyltoluene	ND		mg/kg	0.71	EPA 8260
ACDRUMS01P	7/9/2003	sec-Butylbenzene	ND		mg/kg	0.71	EPA 8260
ACDRUMS01P	7/9/2003	Styrene	ND		mg/kg	0.71	EPA 8260
ACDRUMS01P	7/9/2003	tert-Butylbenzene	ND		mg/kg	0.71	EPA 8260
ACDRUMS01P	7/9/2003	Tetrachloroethene	ND		mg/kg	0.71	EPA 8260
ACDRUMS01P	7/9/2003	Toluene	ND		mg/kg	0.71	EPA 8260
ACDRUMS01P	7/9/2003	trans-1,2-Dichloroethene	ND		mg/kg	0.71	EPA 8260

APPENDIX E
SOIL ANALYTICAL RESULTS
Remedial Investigation Report
Arkansas City MGP Site

Sample Location	Date	Parameter	conc		Units	Reporting Limit[(1)]	Method
ACDRUMS01P	7/9/2003	trans-1,3-Dichloropropene	ND		mg/kg	0.71	EPA 8260
ACDRUMS01P	7/9/2003	Trichloroethene	ND		mg/kg	0.71	EPA 8260
ACDRUMS01P	7/9/2003	Trichlorofluoromethane	ND		mg/kg	0.71	EPA 8260
ACDRUMS01P	7/9/2003	Vinyl chloride	ND	U J	mg/kg	0.71	EPA 8260
ACDRUMS01P	7/9/2003	1,2,4-Trichlorobenzene	ND		mg/kg	0.37	EPA 8270
ACDRUMS01P	7/9/2003	1,2-Dichlorobenzene	ND		mg/kg	0.37	EPA 8270
ACDRUMS01P	7/9/2003	1,3-Dichlorobenzene	ND		mg/kg	0.37	EPA 8270
ACDRUMS01P	7/9/2003	1,4-Dichlorobenzene	ND		mg/kg	0.37	EPA 8270
ACDRUMS01P	7/9/2003	1-Bromo-4-phenoxybenzene	ND		mg/kg	0.37	EPA 8270
ACDRUMS01P	7/9/2003	2,4,5-Trichlorophenol	ND		mg/kg	0.37	EPA 8270
ACDRUMS01P	7/9/2003	2,4,6-Trichlorophenol	ND		mg/kg	0.37	EPA 8270
ACDRUMS01P	7/9/2003	2,4-Dichlorophenol	ND		mg/kg	0.37	EPA 8270
ACDRUMS01P	7/9/2003	2,4-Dimethylphenol	ND		mg/kg	0.37	EPA 8270
ACDRUMS01P	7/9/2003	2,4-Dinitrophenol	ND		mg/kg	1.8	EPA 8270
ACDRUMS01P	7/9/2003	2,4-Dinitrotoluene	ND		mg/kg	0.37	EPA 8270
ACDRUMS01P	7/9/2003	2,6-Dinitrotoluene	ND		mg/kg	0.37	EPA 8270
ACDRUMS01P	7/9/2003	2-Chloronaphthalene	ND		mg/kg	0.37	EPA 8270
ACDRUMS01P	7/9/2003	2-Chlorophenol	ND		mg/kg	0.37	EPA 8270
ACDRUMS01PDL	7/9/2003	2-Methylnaphthalene	3.0		mg/kg	0.37	EPA 8270
ACDRUMS01P	7/9/2003	2-Methylphenol (o-cresol)	0.42		mg/kg	0.37	EPA 8270
ACDRUMS01P	7/9/2003	2-Nitroaniline	ND		mg/kg	1.8	EPA 8270
ACDRUMS01P	7/9/2003	2-Nitrophenol	ND		mg/kg	0.37	EPA 8270
ACDRUMS01P	7/9/2003	3,3'-Dichlorobenzidine	ND	U J	mg/kg	0.75	EPA 8270
ACDRUMS01P	7/9/2003	3-Nitroaniline	ND		mg/kg	1.8	EPA 8270
ACDRUMS01P	7/9/2003	4,6-Dinitro-2-methylphenol	ND		mg/kg	1.8	EPA 8270
ACDRUMS01P	7/9/2003	4-Chloro-3-methylphenol	ND		mg/kg	0.75	EPA 8270
ACDRUMS01P	7/9/2003	4-Chloroaniline	ND		mg/kg	0.75	EPA 8270
ACDRUMS01P	7/9/2003	4-Chlorophenylphenyl ether	ND		mg/kg	0.37	EPA 8270
ACDRUMS01P	7/9/2003	4-Methylphenol	0.80		mg/kg	0.37	EPA 8270
ACDRUMS01P	7/9/2003	4-Nitroaniline	ND	U J	mg/kg	1.8	EPA 8270
ACDRUMS01P	7/9/2003	4-Nitrophenol	ND		mg/kg	1.8	EPA 8270
ACDRUMS01P	7/9/2003	Acenaphthene	0.66		mg/kg	0.37	EPA 8270
ACDRUMS01P	7/9/2003	Acenaphthylene	3.3		mg/kg	0.37	EPA 8270
ACDRUMS01PDL	7/9/2003	Anthracene	6.1		mg/kg	3.7	EPA 8270
ACDRUMS01P	7/9/2003	Benzo(a)anthracene	3.6		mg/kg	0.37	EPA 8270
ACDRUMS01P	7/9/2003	Benzo(a)pyrene	2.8		mg/kg	0.37	EPA 8270
ACDRUMS01PDL	7/9/2003	Benzo(b)fluoranthene	3.1	J	mg/kg	0.37	EPA 8270
ACDRUMS01P	7/9/2003	Benzo(g,h,i)perylene	0.58		mg/kg	0.37	EPA 8270
ACDRUMS01P	7/9/2003	Benzo(k)fluoranthene	2.2	J	mg/kg	0.37	EPA 8270
ACDRUMS01P	7/9/2003	Benzoic acid	ND		mg/kg	1.8	EPA 8270
ACDRUMS01P	7/9/2003	Benzyl alcohol	ND		mg/kg	0.75	EPA 8270
ACDRUMS01P	7/9/2003	Bis(2-chloroethoxy)methane	ND		mg/kg	0.37	EPA 8270
ACDRUMS01P	7/9/2003	bis(2-Chloroethyl) ether	ND		mg/kg	0.37	EPA 8270
ACDRUMS01P	7/9/2003	Bis(2-chloroisopropyl) ether	ND		mg/kg	0.37	EPA 8270
ACDRUMS01P	7/9/2003	Bis(2-ethylhexyl)phthalate	ND		mg/kg	0.37	EPA 8270
ACDRUMS01P	7/9/2003	Butylbenzylphthalate	ND	U J	mg/kg	0.37	EPA 8270

APPENDIX E
SOIL ANALYTICAL RESULTS
Remedial Investigation Report
Arkansas City MGP Site

Sample Location	Date	Parameter	conc		Units	Reporting Limit[1]	Method
ACDRUMS01P	7/9/2003	Chrysene	2.7		mg/kg	0.37	EPA 8270
ACDRUMS01P	7/9/2003	Dibenzo(a,h)anthracene	0.47		mg/kg	0.37	EPA 8270
ACDRUMS01P	7/9/2003	Dibenzofuran	2.8		mg/kg	0.37	EPA 8270
ACDRUMS01P	7/9/2003	Diethylphthalate	ND		mg/kg	0.37	EPA 8270
ACDRUMS01P	7/9/2003	Dimethylphthalate	ND		mg/kg	0.37	EPA 8270
ACDRUMS01P	7/9/2003	Di-n-butylphthalate	ND		mg/kg	0.37	EPA 8270
ACDRUMS01P	7/9/2003	Di-n-octylphthalate	ND		mg/kg	0.37	EPA 8270
ACDRUMS01PDL	7/9/2003	Fluoranthene	8.6		mg/kg	3.7	EPA 8270
ACDRUMS01P	7/9/2003	Fluorene	4.0		mg/kg	0.37	EPA 8270
ACDRUMS01P	7/9/2003	Hexachloro-1,3-butadiene	ND		mg/kg	0.37	EPA 8270
ACDRUMS01P	7/9/2003	Hexachlorobenzene	ND		mg/kg	0.37	EPA 8270
ACDRUMS01P	7/9/2003	Hexachlorocyclopentadiene	ND		mg/kg	0.37	EPA 8270
ACDRUMS01P	7/9/2003	Hexachloroethane	ND		mg/kg	0.37	EPA 8270
ACDRUMS01P	7/9/2003	Indeno(1,2,3-cd)pyrene	0.74		mg/kg	0.37	EPA 8270
ACDRUMS01P	7/9/2003	Isophorone	ND		mg/kg	0.37	EPA 8270
ACDRUMS01PDL	7/9/2003	Naphthalene	12		mg/kg	3.7	EPA 8270
ACDRUMS01P	7/9/2003	Nitrobenzene	ND		mg/kg	0.37	EPA 8270
ACDRUMS01P	7/9/2003	N-Nitroso-di-n-propylamine	ND		mg/kg	0.37	EPA 8270
ACDRUMS01P	7/9/2003	N-Nitrosodiphenylamine	ND		mg/kg	0.37	EPA 8270
ACDRUMS01P	7/9/2003	Pentachlorophenol	ND		mg/kg	1.8	EPA 8270
ACDRUMS01PDL	7/9/2003	Phenanthrene	12		mg/kg	3.7	EPA 8270
ACDRUMS01P	7/9/2003	Phenol	ND		mg/kg	0.37	EPA 8270
ACDRUMS01PDL	7/9/2003	Pyrene	6.6		mg/kg	3.7	EPA 8270
ACMW1S01P	7/7/2003	Cyanide	ND		mg/kg	0.0555	EPA 335.3
ACMW1S01P	7/7/2003	Arsenic	2.92	J	mg/kg	0.999	EPA 6010
ACMW1S01P	7/7/2003	Barium	45.4	J	mg/kg	0.999	EPA 6010
ACMW1S01P	7/7/2003	Cadmium	ND		mg/kg	0.5	EPA 6010
ACMW1S01P	7/7/2003	Chromium	6.58	J	mg/kg	0.5	EPA 6010
ACMW1S01P	7/7/2003	Lead	29.7	J	mg/kg	0.5	EPA 6010
ACMW1S01P	7/7/2003	Selenium	ND		mg/kg	1.5	EPA 6010
ACMW1S01P	7/7/2003	Silver	ND		mg/kg	0.699	EPA 6010
ACMW1S01P	7/7/2003	Mercury	ND		mg/kg	0.171	EPA 7471
ACMW1S01P	7/7/2003	4,4'-DDD	ND		mg/kg	0.0037	EPA 8081A
ACMW1S01P	7/7/2003	4,4'-DDE	ND		mg/kg	0.0037	EPA 8081A
ACMW1S01P	7/7/2003	4,4'-DDT	ND		mg/kg	0.0037	EPA 8081A
ACMW1S01P	7/7/2003	Aldrin	0.0022	R	mg/kg	0.0019	EPA 8081A
ACMW1S01P	7/7/2003	alpha-BHC	ND		mg/kg	0.0019	EPA 8081A
ACMW1S01P	7/7/2003	alpha-Chlordane	ND		mg/kg	0.0019	EPA 8081A
ACMW1S01P	7/7/2003	beta-BHC	ND		mg/kg	0.0019	EPA 8081A
ACMW1S01P	7/7/2003	Chlordane	ND		mg/kg	0.0074	EPA 8081A
ACMW1S01P	7/7/2003	delta-BHC	ND		mg/kg	0.0019	EPA 8081A
ACMW1S01P	7/7/2003	Dieldrin	ND		mg/kg	0.0037	EPA 8081A
ACMW1S01P	7/7/2003	Endosulfan I	ND		mg/kg	0.0019	EPA 8081A
ACMW1S01P	7/7/2003	Endosulfan II	ND		mg/kg	0.0037	EPA 8081A
ACMW1S01P	7/7/2003	Endosulfan sulfate	ND		mg/kg	0.019	EPA 8081A
ACMW1S01P	7/7/2003	Endrin	ND		mg/kg	0.0037	EPA 8081A

APPENDIX E
SOIL ANALYTICAL RESULTS
Remedial Investigation Report
Arkansas City MGP Site

Sample Location	Date	Parameter	conc		Units	Reporting Limit[1]	Method
ACMW1S01P	7/7/2003	Endrin aldehyde	ND		mg/kg	0.0037	EPA 8081A
ACMW1S01P	7/7/2003	Endrin ketone	ND		mg/kg	0.0037	EPA 8081A
ACMW1S01P	7/7/2003	gamma-BHC (Lindane)	ND		mg/kg	0.0019	EPA 8081A
ACMW1S01P	7/7/2003	gamma-Chlordane	ND		mg/kg	0.0019	EPA 8081A
ACMW1S01P	7/7/2003	Heptachlor	ND		mg/kg	0.0019	EPA 8081A
ACMW1S01P	7/7/2003	Heptachlor epoxide	ND		mg/kg	0.0019	EPA 8081A
ACMW1S01P	7/7/2003	Methoxychlor	ND		mg/kg	0.019	EPA 8081A
ACMW1S01P	7/7/2003	Toxaphene	ND		mg/kg	0.092	EPA 8081A
ACMW1S01P	7/7/2003	1,1,1,2-Tetrachloroethane	ND	U J	mg/kg	0.0055	EPA 8260
ACMW1S01P	7/7/2003	1,1,1-Trichloroethane	ND	U J	mg/kg	0.0055	EPA 8260
ACMW1S01P	7/7/2003	1,1,2,2-Tetrachloroethane	ND	U J	mg/kg	0.0055	EPA 8260
ACMW1S01P	7/7/2003	1,1,2-Trichloroethane	ND	U J	mg/kg	0.0055	EPA 8260
ACMW1S01P	7/7/2003	1,1-Dichloroethane	ND	U J	mg/kg	0.0055	EPA 8260
ACMW1S01P	7/7/2003	1,1-Dichloroethene	ND	U J	mg/kg	0.0055	EPA 8260
ACMW1S01P	7/7/2003	1,1-Dichloropropene	ND	U J	mg/kg	0.0055	EPA 8260
ACMW1S01P	7/7/2003	1,2,3-Trichlorobenzene	ND	U J	mg/kg	0.0055	EPA 8260
ACMW1S01P	7/7/2003	1,2,3-Trichloropropane	ND	U J	mg/kg	0.0055	EPA 8260
ACMW1S01P	7/7/2003	1,2,4-Trichlorobenzene	ND	U J	mg/kg	0.0055	EPA 8260
ACMW1S01P	7/7/2003	1,2,4-Trimethylbenzene	ND	U J	mg/kg	0.0055	EPA 8260
ACMW1S01P	7/7/2003	1,2-Dibromo-3-chloropropane	ND	U J	mg/kg	0.0055	EPA 8260
ACMW1S01P	7/7/2003	1,2-Dibromoethane (EDB)	ND	U J	mg/kg	0.0055	EPA 8260
ACMW1S01P	7/7/2003	1,2-Dichlorobenzene	ND	U J	mg/kg	0.0055	EPA 8260
ACMW1S01P	7/7/2003	1,2-Dichloroethane	ND	U J	mg/kg	0.0055	EPA 8260
ACMW1S01P	7/7/2003	1,2-Dichloropropane	ND	U J	mg/kg	0.0055	EPA 8260
ACMW1S01P	7/7/2003	1,3,5-Trimethylbenzene	ND	U J	mg/kg	0.0055	EPA 8260
ACMW1S01P	7/7/2003	1,3-Dichlorobenzene	ND	U J	mg/kg	0.0055	EPA 8260
ACMW1S01P	7/7/2003	1,3-Dichloropropane	ND	U J	mg/kg	0.0055	EPA 8260
ACMW1S01P	7/7/2003	1,4-Dichlorobenzene	ND	U J	mg/kg	0.0055	EPA 8260
ACMW1S01P	7/7/2003	2,2-Dichloropropane	ND	U J	mg/kg	0.0055	EPA 8260
ACMW1S01P	7/7/2003	2-Butanone (MEK)	ND	U J	mg/kg	0.011	EPA 8260
ACMW1S01P	7/7/2003	2-Chloroethylvinyl ether	ND	U J	mg/kg	0.0055	EPA 8260
ACMW1S01P	7/7/2003	2-Chlorotoluene	ND	U J	mg/kg	0.0055	EPA 8260
ACMW1S01P	7/7/2003	2-Hexanone	ND	U J	mg/kg	0.11	EPA 8260
ACMW1S01P	7/7/2003	4-Chlorotoluene	ND	U J	mg/kg	0.0055	EPA 8260
ACMW1S01P	7/7/2003	4-Methyl-2-pentanone (MIBK)	ND	U J	mg/kg	0.011	EPA 8260
ACMW1S01P	7/7/2003	Acetone	ND	U J	mg/kg	0.022	EPA 8260
ACMW1S01P	7/7/2003	Benzene	ND	U J	mg/kg	0.0055	EPA 8260
ACMW1S01P	7/7/2003	Bromobenzene	ND	U J	mg/kg	0.0055	EPA 8260
ACMW1S01P	7/7/2003	Bromochloromethane	ND	U J	mg/kg	0.0055	EPA 8260
ACMW1S01P	7/7/2003	Bromodichloromethane	ND	U J	mg/kg	0.0055	EPA 8260
ACMW1S01P	7/7/2003	Bromoform	ND	U J	mg/kg	0.0055	EPA 8260
ACMW1S01P	7/7/2003	Bromomethane	ND	U J	mg/kg	0.0055	EPA 8260
ACMW1S01P	7/7/2003	Carbon tetrachloride	ND	U J	mg/kg	0.0055	EPA 8260
ACMW1S01P	7/7/2003	Chlorobenzene	ND	U J	mg/kg	0.0055	EPA 8260
ACMW1S01P	7/7/2003	Chloroethane	ND	U J	mg/kg	0.0055	EPA 8260
ACMW1S01P	7/7/2003	Chloroform	ND	U J	mg/kg	0.0055	EPA 8260

APPENDIX E
SOIL ANALYTICAL RESULTS
Remedial Investigation Report
Arkansas City MGP Site

Sample Location	Date	Parameter	conc			Units	Reporting Limit[1]	Method
ACMW1S01P	7/7/2003	Chloromethane	ND	U	J	mg/kg	0.0055	EPA 8260
ACMW1S01P	7/7/2003	cis-1,2-Dichloroethene	ND	U	J	mg/kg	0.0055	EPA 8260
ACMW1S01P	7/7/2003	cis-1,3-Dichloropropene	ND	U	J	mg/kg	0.0055	EPA 8260
ACMW1S01P	7/7/2003	Dibromochloromethane	ND	U	J	mg/kg	0.0055	EPA 8260
ACMW1S01P	7/7/2003	Dibromomethane	ND	U	J	mg/kg	0.0055	EPA 8260
ACMW1S01P	7/7/2003	Dichlorodifluoromethane	ND	U	J	mg/kg	0.0055	EPA 8260
ACMW1S01P	7/7/2003	Ethylbenzene	ND	U	J	mg/kg	0.0055	EPA 8260
ACMW1S01P	7/7/2003	Hexachloro-1,3-butadiene	ND	U	J	mg/kg	0.0055	EPA 8260
ACMW1S01P	7/7/2003	Isopropylbenzene	ND	U	J	mg/kg	0.0055	EPA 8260
ACMW1S01P	7/7/2003	m/p-xylene	ND	U	J	mg/kg	0.0055	EPA 8260
ACMW1S01P	7/7/2003	Methyl tert-butyl ether	ND	U	J	mg/kg	0.0055	EPA 8260
ACMW1S01P	7/7/2003	Methylene chloride	ND	U	J	mg/kg	0.0055	EPA 8260
ACMW1S01P	7/7/2003	Naphthalene	ND	U	J	mg/kg	0.011	EPA 8260
ACMW1S01P	7/7/2003	n-Butylbenzene	ND	U	J	mg/kg	0.0055	EPA 8260
ACMW1S01P	7/7/2003	n-Propylbenzene	ND	U	J	mg/kg	0.0055	EPA 8260
ACMW1S01P	7/7/2003	o-Xylene	ND	U	J	mg/kg	0.0055	EPA 8260
ACMW1S01P	7/7/2003	p-Isopropyltoluene	ND	U	J	mg/kg	0.0055	EPA 8260
ACMW1S01P	7/7/2003	sec-Butylbenzene	ND	U	J	mg/kg	0.0055	EPA 8260
ACMW1S01P	7/7/2003	Styrene	ND	U	J	mg/kg	0.0055	EPA 8260
ACMW1S01P	7/7/2003	tert-Butylbenzene	ND	U	J	mg/kg	0.0055	EPA 8260
ACMW1S01P	7/7/2003	Tetrachloroethene	ND	U	J	mg/kg	0.0055	EPA 8260
ACMW1S01P	7/7/2003	Toluene	ND	U	J	mg/kg	0.0055	EPA 8260
ACMW1S01P	7/7/2003	trans-1,2-Dichloroethene	ND	U	J	mg/kg	0.0055	EPA 8260
ACMW1S01P	7/7/2003	trans-1,3-Dichloropropene	ND	U	J	mg/kg	0.0055	EPA 8260
ACMW1S01P	7/7/2003	Trichloroethene	ND	U	J	mg/kg	0.0055	EPA 8260
ACMW1S01P	7/7/2003	Trichlorofluoromethane	ND	U	J	mg/kg	0.0055	EPA 8260
ACMW1S01P	7/7/2003	Vinyl chloride	ND	U	J	mg/kg	0.0055	EPA 8260
ACMW1S01P	7/7/2003	1,2,4-Trichlorobenzene	ND			mg/kg	0.36	EPA 8270
ACMW1S01P	7/7/2003	1,2-Dichlorobenzene	ND			mg/kg	0.36	EPA 8270
ACMW1S01P	7/7/2003	1,3-Dichlorobenzene	ND			mg/kg	0.36	EPA 8270
ACMW1S01P	7/7/2003	1,4-Dichlorobenzene	ND			mg/kg	0.36	EPA 8270
ACMW1S01P	7/7/2003	1-Bromo-4-phenoxybenzene	ND			mg/kg	0.36	EPA 8270
ACMW1S01P	7/7/2003	2,4,5-Trichlorophenol	ND			mg/kg	0.36	EPA 8270
ACMW1S01P	7/7/2003	2,4,6-Trichlorophenol	ND			mg/kg	0.36	EPA 8270
ACMW1S01P	7/7/2003	2,4-Dichlorophenol	ND			mg/kg	0.36	EPA 8270
ACMW1S01P	7/7/2003	2,4-Dimethylphenol	ND			mg/kg	0.36	EPA 8270
ACMW1S01P	7/7/2003	2,4-Dinitrophenol	ND			mg/kg	1.8	EPA 8270
ACMW1S01P	7/7/2003	2,4-Dinitrotoluene	ND			mg/kg	0.36	EPA 8270
ACMW1S01P	7/7/2003	2,6-Dinitrotoluene	ND			mg/kg	0.36	EPA 8270
ACMW1S01P	7/7/2003	2-Chloronaphthalene	ND			mg/kg	0.36	EPA 8270
ACMW1S01P	7/7/2003	2-Chlorophenol	ND			mg/kg	0.36	EPA 8270
ACMW1S01P	7/7/2003	2-Methylnaphthalene	ND			mg/kg	0.36	EPA 8270
ACMW1S01P	7/7/2003	2-Methylphenol (o-cresol)	ND			mg/kg	0.36	EPA 8270
ACMW1S01P	7/7/2003	2-Nitroaniline	ND			mg/kg	1.8	EPA 8270
ACMW1S01P	7/7/2003	2-Nitrophenol	ND			mg/kg	0.36	EPA 8270
ACMW1S01P	7/7/2003	3,3'-Dichlorobenzidine	ND	U	J	mg/kg	0.73	EPA 8270

APPENDIX E
SOIL ANALYTICAL RESULTS
Remedial Investigation Report
Arkansas City MGP Site

Sample Location	Date	Parameter	conc		Units	Reporting Limit[1]	Method
ACMW1S01P	7/7/2003	3-Nitroaniline	ND		mg/kg	1.8	EPA 8270
ACMW1S01P	7/7/2003	4,6-Dinitro-2-methylphenol	ND		mg/kg	1.8	EPA 8270
ACMW1S01P	7/7/2003	4-Chloro-3-methylphenol	ND		mg/kg	0.73	EPA 8270
ACMW1S01P	7/7/2003	4-Chloroaniline	ND		mg/kg	0.73	EPA 8270
ACMW1S01P	7/7/2003	4-Chlorophenylphenyl ether	ND		mg/kg	0.36	EPA 8270
ACMW1S01P	7/7/2003	4-Methylphenol	ND		mg/kg	0.36	EPA 8270
ACMW1S01P	7/7/2003	4-Nitroaniline	ND	U J	mg/kg	1.8	EPA 8270
ACMW1S01P	7/7/2003	4-Nitrophenol	ND		mg/kg	1.8	EPA 8270
ACMW1S01P	7/7/2003	Acenaphthene	ND		mg/kg	0.36	EPA 8270
ACMW1S01P	7/7/2003	Acenaphthylene	ND		mg/kg	0.36	EPA 8270
ACMW1S01P	7/7/2003	Anthracene	ND		mg/kg	0.36	EPA 8270
ACMW1S01P	7/7/2003	Benzo(a)anthracene	ND		mg/kg	0.36	EPA 8270
ACMW1S01P	7/7/2003	Benzo(a)pyrene	ND		mg/kg	0.36	EPA 8270
ACMW1S01P	7/7/2003	Benzo(b)fluoranthene	ND	U J	mg/kg	0.36	EPA 8270
ACMW1S01P	7/7/2003	Benzo(g,h,i)perylene	ND		mg/kg	0.36	EPA 8270
ACMW1S01P	7/7/2003	Benzo(k)fluoranthene	ND	U J	mg/kg	0.36	EPA 8270
ACMW1S01P	7/7/2003	Benzoic acid	ND		mg/kg	1.8	EPA 8270
ACMW1S01P	7/7/2003	Benzyl alcohol	ND		mg/kg	0.73	EPA 8270
ACMW1S01P	7/7/2003	Bis(2-chloroethoxy)methane	ND		mg/kg	0.36	EPA 8270
ACMW1S01P	7/7/2003	bis(2-Chloroethyl) ether	ND		mg/kg	0.36	EPA 8270
ACMW1S01P	7/7/2003	Bis(2-chloroisopropyl) ether	ND		mg/kg	0.36	EPA 8270
ACMW1S01P	7/7/2003	Bis(2-ethylhexyl)phthalate	ND		mg/kg	0.36	EPA 8270
ACMW1S01P	7/7/2003	Butylbenzylphthalate	ND	U J	mg/kg	0.36	EPA 8270
ACMW1S01P	7/7/2003	Chrysene	ND		mg/kg	0.36	EPA 8270
ACMW1S01P	7/7/2003	Dibenzo(a,h)anthracene	ND		mg/kg	0.36	EPA 8270
ACMW1S01P	7/7/2003	Dibenzofuran	ND		mg/kg	0.36	EPA 8270
ACMW1S01P	7/7/2003	Diethylphthalate	ND		mg/kg	0.36	EPA 8270
ACMW1S01P	7/7/2003	Dimethylphthalate	ND		mg/kg	0.36	EPA 8270
ACMW1S01P	7/7/2003	Di-n-butylphthalate	ND		mg/kg	0.36	EPA 8270
ACMW1S01P	7/7/2003	Di-n-octylphthalate	ND		mg/kg	0.36	EPA 8270
ACMW1S01P	7/7/2003	Fluoranthene	ND		mg/kg	0.36	EPA 8270
ACMW1S01P	7/7/2003	Fluorene	ND		mg/kg	0.36	EPA 8270
ACMW1S01P	7/7/2003	Hexachloro-1,3-butadiene	ND		mg/kg	0.36	EPA 8270
ACMW1S01P	7/7/2003	Hexachlorobenzene	ND		mg/kg	0.36	EPA 8270
ACMW1S01P	7/7/2003	Hexachlorocyclopentadiene	ND		mg/kg	0.36	EPA 8270
ACMW1S01P	7/7/2003	Hexachloroethane	ND		mg/kg	0.36	EPA 8270
ACMW1S01P	7/7/2003	Indeno(1,2,3-cd)pyrene	ND		mg/kg	0.36	EPA 8270
ACMW1S01P	7/7/2003	Isophorone	ND		mg/kg	0.36	EPA 8270
ACMW1S01P	7/7/2003	Naphthalene	ND		mg/kg	0.36	EPA 8270
ACMW1S01P	7/7/2003	Nitrobenzene	ND		mg/kg	0.36	EPA 8270
ACMW1S01P	7/7/2003	N-Nitroso-di-n-propylamine	ND		mg/kg	0.36	EPA 8270
ACMW1S01P	7/7/2003	N-Nitrosodiphenylamine	ND		mg/kg	0.36	EPA 8270
ACMW1S01P	7/7/2003	Pentachlorophenol	ND		mg/kg	1.8	EPA 8270
ACMW1S01P	7/7/2003	Phenanthrene	ND		mg/kg	0.36	EPA 8270
ACMW1S01P	7/7/2003	Phenol	ND		mg/kg	0.36	EPA 8270
ACMW1S01P	7/7/2003	Pyrene	ND		mg/kg	0.36	EPA 8270

APPENDIX E
SOIL ANALYTICAL RESULTS
Remedial Investigation Report
Arkansas City MGP Site

Sample Location	Date	Parameter	conc			Units	Reporting Limit[1]	Method
ACMW1S02P	7/7/2003	Cyanide	ND			mg/kg	0.0592	EPA 335.3
ACMW1S02P	7/7/2003	Arsenic	2.36		J	mg/kg	0.884	EPA 6010
ACMW1S02P	7/7/2003	Barium	66.5		J	mg/kg	0.884	EPA 6010
ACMW1S02P	7/7/2003	Cadmium	ND	U	J	mg/kg	0.442	EPA 6010
ACMW1S02P	7/7/2003	Chromium	9.49		J	mg/kg	0.442	EPA 6010
ACMW1S02P	7/7/2003	Lead	6.35		J	mg/kg	0.442	EPA 6010
ACMW1S02P	7/7/2003	Selenium	5.45		J	mg/kg	1.33	EPA 6010
ACMW1S02P	7/7/2003	Silver	ND			mg/kg	0.619	EPA 6010
ACMW1S02P	7/7/2003	Mercury	ND	U	J	mg/kg	0.152	EPA 7471
ACMW1S02P	7/7/2003	4,4'-DDD	ND			mg/kg	0.0039	EPA 8081A
ACMW1S02P	7/7/2003	4,4'-DDE	ND			mg/kg	0.0039	EPA 8081A
ACMW1S02P	7/7/2003	4,4'-DDT	ND			mg/kg	0.0039	EPA 8081A
ACMW1S02P	7/7/2003	Aldrin	ND			mg/kg	0.0020	EPA 8081A
ACMW1S02P	7/7/2003	alpha-BHC	ND			mg/kg	0.0020	EPA 8081A
ACMW1S02P	7/7/2003	alpha-Chlordane	ND			mg/kg	0.0020	EPA 8081A
ACMW1S02P	7/7/2003	beta-BHC	ND			mg/kg	0.0020	EPA 8081A
ACMW1S02P	7/7/2003	Chlordane	ND			mg/kg	0.0079	EPA 8081A
ACMW1S02P	7/7/2003	delta-BHC	ND			mg/kg	0.0020	EPA 8081A
ACMW1S02P	7/7/2003	Dieldrin	ND			mg/kg	0.0039	EPA 8081A
ACMW1S02P	7/7/2003	Endosulfan I	ND			mg/kg	0.0020	EPA 8081A
ACMW1S02P	7/7/2003	Endosulfan II	ND			mg/kg	0.0039	EPA 8081A
ACMW1S02P	7/7/2003	Endosulfan sulfate	ND			mg/kg	0.020	EPA 8081A
ACMW1S02P	7/7/2003	Endrin	ND			mg/kg	0.0039	EPA 8081A
ACMW1S02P	7/7/2003	Endrin aldehyde	ND			mg/kg	0.0039	EPA 8081A
ACMW1S02P	7/7/2003	Endrin ketone	ND			mg/kg	0.0039	EPA 8081A
ACMW1S02P	7/7/2003	gamma-BHC (Lindane)	ND			mg/kg	0.0020	EPA 8081A
ACMW1S02P	7/7/2003	gamma-Chlordane	ND			mg/kg	0.0020	EPA 8081A
ACMW1S02P	7/7/2003	Heptachlor	ND			mg/kg	0.0020	EPA 8081A
ACMW1S02P	7/7/2003	Heptachlor epoxide	ND			mg/kg	0.0020	EPA 8081A
ACMW1S02P	7/7/2003	Methoxychlor	ND			mg/kg	0.020	EPA 8081A
ACMW1S02P	7/7/2003	Toxaphene	ND			mg/kg	0.098	EPA 8081A
ACMW1S02P	7/7/2003	1,1,1,2-Tetrachloroethane	ND	U	J	mg/kg	0.0058	EPA 8260
ACMW1S02P	7/7/2003	1,1,1-Trichloroethane	ND	U	J	mg/kg	0.0058	EPA 8260
ACMW1S02P	7/7/2003	1,1,2,2-Tetrachloroethane	ND	U	J	mg/kg	0.0058	EPA 8260
ACMW1S02P	7/7/2003	1,1,2-Trichloroethane	ND	U	J	mg/kg	0.0058	EPA 8260
ACMW1S02P	7/7/2003	1,1-Dichloroethane	ND	U	J	mg/kg	0.0058	EPA 8260
ACMW1S02P	7/7/2003	1,1-Dichloroethene	ND	U	J	mg/kg	0.0058	EPA 8260
ACMW1S02P	7/7/2003	1,1-Dichloropropene	ND	U	J	mg/kg	0.0058	EPA 8260
ACMW1S02P	7/7/2003	1,2,3-Trichlorobenzene	ND	U	J	mg/kg	0.0058	EPA 8260
ACMW1S02P	7/7/2003	1,2,3-Trichloropropane	ND	U	J	mg/kg	0.0058	EPA 8260
ACMW1S02P	7/7/2003	1,2,4-Trichlorobenzene	ND	U	J	mg/kg	0.0058	EPA 8260
ACMW1S02P	7/7/2003	1,2,4-Trimethylbenzene	ND	U	J	mg/kg	0.0058	EPA 8260
ACMW1S02P	7/7/2003	1,2-Dibromo-3-chloropropane	ND	U	J	mg/kg	0.0058	EPA 8260
ACMW1S02P	7/7/2003	1,2-Dibromoethane (EDB)	ND	U	J	mg/kg	0.0058	EPA 8260
ACMW1S02P	7/7/2003	1,2-Dichlorobenzene	ND	U	J	mg/kg	0.0058	EPA 8260
ACMW1S02P	7/7/2003	1,2-Dichloroethane	ND	U	J	mg/kg	0.0058	EPA 8260

APPENDIX E
SOIL ANALYTICAL RESULTS
Remedial Investigation Report
Arkansas City MGP Site

Sample Location	Date	Parameter	conc			Units	Reporting Limit[1]	Method
ACMW1S02P	7/7/2003	1,2-Dichloropropane	ND	U	J	mg/kg	0.0058	EPA 8260
ACMW1S02P	7/7/2003	1,3,5-Trimethylbenzene	ND	U	J	mg/kg	0.0058	EPA 8260
ACMW1S02P	7/7/2003	1,3-Dichlorobenzene	ND	U	J	mg/kg	0.0058	EPA 8260
ACMW1S02P	7/7/2003	1,3-Dichloropropane	ND	U	J	mg/kg	0.0058	EPA 8260
ACMW1S02P	7/7/2003	1,4-Dichlorobenzene	ND	U	J	mg/kg	0.0058	EPA 8260
ACMW1S02P	7/7/2003	2,2-Dichloropropane	ND	U	J	mg/kg	0.0058	EPA 8260
ACMW1S02P	7/7/2003	2-Butanone (MEK)	ND	U	J	mg/kg	0.012	EPA 8260
ACMW1S02P	7/7/2003	2-Chloroethylvinyl ether	ND	U	J	mg/kg	0.0058	EPA 8260
ACMW1S02P	7/7/2003	2-Chlorotoluene	ND	U	J	mg/kg	0.0058	EPA 8260
ACMW1S02P	7/7/2003	2-Hexanone	ND	U	J	mg/kg	0.12	EPA 8260
ACMW1S02P	7/7/2003	4-Chlorotoluene	ND	U	J	mg/kg	0.0058	EPA 8260
ACMW1S02P	7/7/2003	4-Methyl-2-pentanone (MIBK)	ND	U	J	mg/kg	0.012	EPA 8260
ACMW1S02P	7/7/2003	Acetone	ND	U	J	mg/kg	0.023	EPA 8260
ACMW1S02P	7/7/2003	Benzene	ND	U	J	mg/kg	0.0058	EPA 8260
ACMW1S02P	7/7/2003	Bromobenzene	ND	U	J	mg/kg	0.0058	EPA 8260
ACMW1S02P	7/7/2003	Bromochloromethane	ND	U	J	mg/kg	0.0058	EPA 8260
ACMW1S02P	7/7/2003	Bromodichloromethane	ND	U	J	mg/kg	0.0058	EPA 8260
ACMW1S02P	7/7/2003	Bromoform	ND	U	J	mg/kg	0.0058	EPA 8260
ACMW1S02P	7/7/2003	Bromomethane	ND	U	J	mg/kg	0.0058	EPA 8260
ACMW1S02P	7/7/2003	Carbon tetrachloride	ND	U	J	mg/kg	0.0058	EPA 8260
ACMW1S02P	7/7/2003	Chlorobenzene	ND	U	J	mg/kg	0.0058	EPA 8260
ACMW1S02P	7/7/2003	Chloroethane	ND	U	J	mg/kg	0.0058	EPA 8260
ACMW1S02P	7/7/2003	Chloroform	ND	U	J	mg/kg	0.0058	EPA 8260
ACMW1S02P	7/7/2003	Chloromethane	ND	U	J	mg/kg	0.0058	EPA 8260
ACMW1S02P	7/7/2003	cis-1,2-Dichloroethene	ND	U	J	mg/kg	0.0058	EPA 8260
ACMW1S02P	7/7/2003	cis-1,3-Dichloropropene	ND	U	J	mg/kg	0.0058	EPA 8260
ACMW1S02P	7/7/2003	Dibromochloromethane	ND	U	J	mg/kg	0.0058	EPA 8260
ACMW1S02P	7/7/2003	Dibromomethane	ND	U	J	mg/kg	0.0058	EPA 8260
ACMW1S02P	7/7/2003	Dichlorodifluoromethane	ND	U	J	mg/kg	0.0058	EPA 8260
ACMW1S02P	7/7/2003	Ethylbenzene	ND	U	J	mg/kg	0.0058	EPA 8260
ACMW1S02P	7/7/2003	Hexachloro-1,3-butadiene	ND	U	J	mg/kg	0.0058	EPA 8260
ACMW1S02P	7/7/2003	Isopropylbenzene	ND	U	J	mg/kg	0.0058	EPA 8260
ACMW1S02P	7/7/2003	m/p-xylene	ND	U	J	mg/kg	0.0058	EPA 8260
ACMW1S02P	7/7/2003	Methyl tert-butyl ether	ND	U	J	mg/kg	0.0058	EPA 8260
ACMW1S02P	7/7/2003	Methylene chloride	ND	U	J	mg/kg	0.0058	EPA 8260
ACMW1S02P	7/7/2003	Naphthalene	ND	U	J	mg/kg	0.012	EPA 8260
ACMW1S02P	7/7/2003	n-Butylbenzene	ND	U	J	mg/kg	0.0058	EPA 8260
ACMW1S02P	7/7/2003	n-Propylbenzene	ND	U	J	mg/kg	0.0058	EPA 8260
ACMW1S02P	7/7/2003	o-Xylene	ND	U	J	mg/kg	0.0058	EPA 8260
ACMW1S02P	7/7/2003	p-Isopropyltoluene	ND	U	J	mg/kg	0.0058	EPA 8260
ACMW1S02P	7/7/2003	sec-Butylbenzene	ND	U	J	mg/kg	0.0058	EPA 8260
ACMW1S02P	7/7/2003	Styrene	ND	U	J	mg/kg	0.0058	EPA 8260
ACMW1S02P	7/7/2003	tert-Butylbenzene	ND	U	J	mg/kg	0.0058	EPA 8260
ACMW1S02P	7/7/2003	Tetrachloroethene	ND	U	J	mg/kg	0.0058	EPA 8260
ACMW1S02P	7/7/2003	Toluene	ND	U	J	mg/kg	0.0058	EPA 8260
ACMW1S02P	7/7/2003	trans-1,2-Dichloroethene	ND	U	J	mg/kg	0.0058	EPA 8260

APPENDIX E
SOIL ANALYTICAL RESULTS
Remedial Investigation Report
Arkansas City MGP Site

Sample Location	Date	Parameter	conc		Units	Reporting Limit[1]	Method
ACMW1S02P	7/7/2003	trans-1,3-Dichloropropene	ND	U J	mg/kg	0.0058	EPA 8260
ACMW1S02P	7/7/2003	Trichloroethene	ND	U J	mg/kg	0.0058	EPA 8260
ACMW1S02P	7/7/2003	Trichlorofluoromethane	ND	U J	mg/kg	0.0058	EPA 8260
ACMW1S02P	7/7/2003	Vinyl chloride	ND	U J	mg/kg	0.0058	EPA 8260
ACMW1S02P	7/7/2003	1,2,4-Trichlorobenzene	ND		mg/kg	0.39	EPA 8270
ACMW1S02P	7/7/2003	1,2-Dichlorobenzene	ND		mg/kg	0.39	EPA 8270
ACMW1S02P	7/7/2003	1,3-Dichlorobenzene	ND		mg/kg	0.39	EPA 8270
ACMW1S02P	7/7/2003	1,4-Dichlorobenzene	ND		mg/kg	0.39	EPA 8270
ACMW1S02P	7/7/2003	1-Bromo-4-phenoxybenzene	ND		mg/kg	0.39	EPA 8270
ACMW1S02P	7/7/2003	2,4,5-Trichlorophenol	ND		mg/kg	0.39	EPA 8270
ACMW1S02P	7/7/2003	2,4,6-Trichlorophenol	ND		mg/kg	0.39	EPA 8270
ACMW1S02P	7/7/2003	2,4-Dichlorophenol	ND		mg/kg	0.39	EPA 8270
ACMW1S02P	7/7/2003	2,4-Dimethylphenol	ND		mg/kg	0.39	EPA 8270
ACMW1S02P	7/7/2003	2,4-Dinitrophenol	ND		mg/kg	1.9	EPA 8270
ACMW1S02P	7/7/2003	2,4-Dinitrotoluene	ND		mg/kg	0.39	EPA 8270
ACMW1S02P	7/7/2003	2,6-Dinitrotoluene	ND		mg/kg	0.39	EPA 8270
ACMW1S02P	7/7/2003	2-Chloronaphthalene	ND		mg/kg	0.39	EPA 8270
ACMW1S02P	7/7/2003	2-Chlorophenol	ND		mg/kg	0.39	EPA 8270
ACMW1S02P	7/7/2003	2-Methylnaphthalene	ND		mg/kg	0.39	EPA 8270
ACMW1S02P	7/7/2003	2-Methylphenol (o-cresol)	ND		mg/kg	0.39	EPA 8270
ACMW1S02P	7/7/2003	2-Nitroaniline	ND		mg/kg	1.9	EPA 8270
ACMW1S02P	7/7/2003	2-Nitrophenol	ND		mg/kg	0.39	EPA 8270
ACMW1S02P	7/7/2003	3,3'-Dichlorobenzidine	ND	U J	mg/kg	0.78	EPA 8270
ACMW1S02P	7/7/2003	3-Nitroaniline	ND		mg/kg	1.9	EPA 8270
ACMW1S02P	7/7/2003	4,6-Dinitro-2-methylphenol	ND		mg/kg	1.9	EPA 8270
ACMW1S02P	7/7/2003	4-Chloro-3-methylphenol	ND		mg/kg	0.78	EPA 8270
ACMW1S02P	7/7/2003	4-Chloroaniline	ND		mg/kg	0.78	EPA 8270
ACMW1S02P	7/7/2003	4-Chlorophenylphenyl ether	ND		mg/kg	0.39	EPA 8270
ACMW1S02P	7/7/2003	4-Methylphenol	ND		mg/kg	0.39	EPA 8270
ACMW1S02P	7/7/2003	4-Nitroaniline	ND	U J	mg/kg	1.9	EPA 8270
ACMW1S02P	7/7/2003	4-Nitrophenol	ND		mg/kg	1.9	EPA 8270
ACMW1S02P	7/7/2003	Acenaphthene	ND		mg/kg	0.39	EPA 8270
ACMW1S02P	7/7/2003	Acenaphthylene	ND		mg/kg	0.39	EPA 8270
ACMW1S02P	7/7/2003	Anthracene	ND		mg/kg	0.39	EPA 8270
ACMW1S02P	7/7/2003	Benzo(a)anthracene	ND		mg/kg	0.39	EPA 8270
ACMW1S02P	7/7/2003	Benzo(a)pyrene	ND		mg/kg	0.39	EPA 8270
ACMW1S02P	7/7/2003	Benzo(b)fluoranthene	ND	U J	mg/kg	0.39	EPA 8270
ACMW1S02P	7/7/2003	Benzo(g,h,i)perylene	ND		mg/kg	0.39	EPA 8270
ACMW1S02P	7/7/2003	Benzo(k)fluoranthene	ND	U J	mg/kg	0.39	EPA 8270
ACMW1S02P	7/7/2003	Benzoic acid	ND		mg/kg	1.9	EPA 8270
ACMW1S02P	7/7/2003	Benzyl alcohol	ND		mg/kg	0.78	EPA 8270
ACMW1S02P	7/7/2003	Bis(2-chloroethoxy)methane	ND		mg/kg	0.39	EPA 8270
ACMW1S02P	7/7/2003	bis(2-Chloroethyl) ether	ND		mg/kg	0.39	EPA 8270
ACMW1S02P	7/7/2003	Bis(2-chloroisopropyl) ether	ND		mg/kg	0.39	EPA 8270
ACMW1S02P	7/7/2003	Bis(2-ethylhexyl)phthalate	ND		mg/kg	0.39	EPA 8270
ACMW1S02P	7/7/2003	Butylbenzylphthalate	ND	U J	mg/kg	0.39	EPA 8270

APPENDIX E
SOIL ANALYTICAL RESULTS
Remedial Investigation Report
Arkansas City MGP Site

Sample Location	Date	Parameter	conc		Units	Reporting Limit[1]	Method
ACMW1S02P	7/7/2003	Chrysene	ND		mg/kg	0.39	EPA 8270
ACMW1S02P	7/7/2003	Dibenzo(a,h)anthracene	ND		mg/kg	0.39	EPA 8270
ACMW1S02P	7/7/2003	Dibenzofuran	ND		mg/kg	0.39	EPA 8270
ACMW1S02P	7/7/2003	Diethylphthalate	ND		mg/kg	0.39	EPA 8270
ACMW1S02P	7/7/2003	Dimethylphthalate	ND		mg/kg	0.39	EPA 8270
ACMW1S02P	7/7/2003	Di-n-butylphthalate	ND		mg/kg	0.39	EPA 8270
ACMW1S02P	7/7/2003	Di-n-octylphthalate	ND		mg/kg	0.39	EPA 8270
ACMW1S02P	7/7/2003	Fluoranthene	ND		mg/kg	0.39	EPA 8270
ACMW1S02P	7/7/2003	Fluorene	ND		mg/kg	0.39	EPA 8270
ACMW1S02P	7/7/2003	Hexachloro-1,3-butadiene	ND		mg/kg	0.39	EPA 8270
ACMW1S02P	7/7/2003	Hexachlorobenzene	ND		mg/kg	0.39	EPA 8270
ACMW1S02P	7/7/2003	Hexachlorocyclopentadiene	ND		mg/kg	0.39	EPA 8270
ACMW1S02P	7/7/2003	Hexachloroethane	ND		mg/kg	0.39	EPA 8270
ACMW1S02P	7/7/2003	Indeno(1,2,3-cd)pyrene	ND		mg/kg	0.39	EPA 8270
ACMW1S02P	7/7/2003	Isophorone	ND		mg/kg	0.39	EPA 8270
ACMW1S02P	7/7/2003	Naphthalene	ND		mg/kg	0.39	EPA 8270
ACMW1S02P	7/7/2003	Nitrobenzene	ND		mg/kg	0.39	EPA 8270
ACMW1S02P	7/7/2003	N-Nitroso-di-n-propylamine	ND		mg/kg	0.39	EPA 8270
ACMW1S02P	7/7/2003	N-Nitrosodiphenylamine	ND		mg/kg	0.39	EPA 8270
ACMW1S02P	7/7/2003	Pentachlorophenol	ND		mg/kg	1.9	EPA 8270
ACMW1S02P	7/7/2003	Phenanthrene	ND		mg/kg	0.39	EPA 8270
ACMW1S02P	7/7/2003	Phenol	ND		mg/kg	0.39	EPA 8270
ACMW1S02P	7/7/2003	Pyrene	ND		mg/kg	0.39	EPA 8270
ACMW2S01P	7/8/2003	Cyanide	0.372		mg/kg	0.0602	EPA 335.3
ACMW2S01P	7/8/2003	Arsenic	14.2	J	mg/kg	1.18	EPA 6010
ACMW2S01P	7/8/2003	Barium	69	J	mg/kg	1.18	EPA 6010
ACMW2S01P	7/8/2003	Cadmium	ND		mg/kg	1.77	EPA 6010
ACMW2S01P	7/8/2003	Chromium	19.5	J	mg/kg	0.591	EPA 6010
ACMW2S01P	7/8/2003	Lead	53.5	J	mg/kg	0.591	EPA 6010
ACMW2S01P	7/8/2003	Selenium	43.9	J	mg/kg	1.77	EPA 6010
ACMW2S01P	7/8/2003	Silver	ND		mg/kg	0.827	EPA 6010
ACMW2S01P	7/8/2003	Mercury	0.259		mg/kg	0.161	EPA 7471
ACMW2S01P	7/8/2003	Benzene	ND		mg/kg	0.060	EPA 8260
ACMW2S01P	7/8/2003	Ethylbenzene	ND		mg/kg	0.060	EPA 8260
ACMW2S01P	7/8/2003	Toluene	ND		mg/kg	0.060	EPA 8260
ACMW2S01P	7/8/2003	Xylenes	ND		mg/kg	0.18	EPA 8260
ACMW2S01P	7/8/2003	Acenaphthene	ND		mg/kg	15	EPA 8310
ACMW2S01P	7/8/2003	Acenaphthylene	ND		mg/kg	31	EPA 8310
ACMW2S01P	7/8/2003	Anthracene	95		mg/kg	2.8	EPA 8310
ACMW2S01P	7/8/2003	Benzo(a)anthracene	190		mg/kg	41	EPA 8310
ACMW2S01P	7/8/2003	Benzo(a)pyrene	120	J	mg/kg	55	EPA 8310
ACMW2S01P	7/8/2003	Benzo(b)fluoranthene	87		mg/kg	3.1	EPA 8310
ACMW2S01P	7/8/2003	Benzo(g,h,i)perylene	98		mg/kg	10	EPA 8310
ACMW2S01P	7/8/2003	Benzo(k)fluoranthene	62		mg/kg	2.8	EPA 8310
ACMW2S01P	7/8/2003	Chrysene	180		mg/kg	31	EPA 8310
ACMW2S01P	7/8/2003	Dibenzo(a,h)anthracene	80	J	mg/kg	9.0	EPA 8310

APPENDIX E
SOIL ANALYTICAL RESULTS
Remedial Investigation Report
Arkansas City MGP Site

Sample Location	Date	Parameter	conc		Units	Reporting Limit[1]	Method
ACMW2S01P	7/8/2003	Fluoranthene	480		mg/kg	72	EPA 8310
ACMW2S01P	7/8/2003	Fluorene	ND		mg/kg	14	EPA 8310
ACMW2S01P	7/8/2003	Indeno(1,2,3-cd)pyrene	ND		mg/kg	3.8	EPA 8310
ACMW2S01P	7/8/2003	Naphthalene	ND		mg/kg	45	EPA 8310
ACMW2S01P	7/8/2003	Phenanthrene	240		mg/kg	48	EPA 8310
ACMW2S01P	7/8/2003	Pyrene	370		mg/kg	38	EPA 8310
ACMW2S02P	7/8/2003	Cyanide	0.187		mg/kg	0.0568	EPA 335.3
ACMW2S02P	7/8/2003	Arsenic	1.64	J	mg/kg	0.931	EPA 6010
ACMW2S02P	7/8/2003	Barium	100	J	mg/kg	0.931	EPA 6010
ACMW2S02P	7/8/2003	Cadmium	ND		mg/kg	0.465	EPA 6010
ACMW2S02P	7/8/2003	Chromium	10	J	mg/kg	0.465	EPA 6010
ACMW2S02P	7/8/2003	Lead	8.38	J	mg/kg	0.465	EPA 6010
ACMW2S02P	7/8/2003	Selenium	7.35	J	mg/kg	1.4	EPA 6010
ACMW2S02P	7/8/2003	Silver	ND		mg/kg	0.651	EPA 6010
ACMW2S02P	7/8/2003	Mercury	ND	U J	mg/kg	0.146	EPA 7471
ACMW2S02P	7/8/2003	Benzene	ND		mg/kg	0.056	EPA 8260
ACMW2S02P	7/8/2003	Ethylbenzene	ND		mg/kg	0.056	EPA 8260
ACMW2S02P	7/8/2003	Toluene	ND		mg/kg	0.056	EPA 8260
ACMW2S02P	7/8/2003	Xylenes	ND		mg/kg	0.17	EPA 8260
ACMW2S02P	7/8/2003	Acenaphthene	ND		mg/kg	0.0051	EPA 8310
ACMW2S02P	7/8/2003	Acenaphthylene	ND		mg/kg	0.010	EPA 8310
ACMW2S02P	7/8/2003	Anthracene	ND		mg/kg	0.00091	EPA 8310
ACMW2S02P	7/8/2003	Benzo(a)anthracene	0.0075		mg/kg	0.0014	EPA 8310
ACMW2S02P	7/8/2003	Benzo(a)pyrene	0.0086		mg/kg	0.0018	EPA 8310
ACMW2S02P	7/8/2003	Benzo(b)fluoranthene	0.0057		mg/kg	0.0010	EPA 8310
ACMW2S02P	7/8/2003	Benzo(g,h,i)perylene	ND		mg/kg	0.0034	EPA 8310
ACMW2S02P	7/8/2003	Benzo(k)fluoranthene	ND		mg/kg	0.00091	EPA 8310
ACMW2S02P	7/8/2003	Chrysene	0.0082		mg/kg	0.0010	EPA 8310
ACMW2S02P	7/8/2003	Dibenzo(a,h)anthracene	ND	U J	mg/kg	0.0029	EPA 8310
ACMW2S02P	7/8/2003	Fluoranthene	ND		mg/kg	0.0024	EPA 8310
ACMW2S02P	7/8/2003	Fluorene	ND		mg/kg	0.0048	EPA 8310
ACMW2S02P	7/8/2003	Indeno(1,2,3-cd)pyrene	ND		mg/kg	0.0012	EPA 8310
ACMW2S02P	7/8/2003	Naphthalene	ND		mg/kg	0.015	EPA 8310
ACMW2S02P	7/8/2003	Phenanthrene	0.012	U	mg/kg	0.0057	EPA 8310
ACMW2S02P	7/8/2003	Pyrene	0.0099		mg/kg	0.0012	EPA 8310
ACMW3S01P	7/7/2003	Cyanide	ND		mg/kg	0.0565	EPA 335.3
ACMW3S01P	7/7/2003	Arsenic	ND		mg/kg	0.957	EPA 6010
ACMW3S01P	7/7/2003	Barium	62.7	J	mg/kg	0.957	EPA 6010
ACMW3S01P	7/7/2003	Cadmium	ND	U J	mg/kg	0.479	EPA 6010
ACMW3S01P	7/7/2003	Chromium	7.81	J	mg/kg	0.479	EPA 6010
ACMW3S01P	7/7/2003	Lead	6.25	J	mg/kg	0.479	EPA 6010
ACMW3S01P	7/7/2003	Selenium	6.39	J	mg/kg	1.44	EPA 6010
ACMW3S01P	7/7/2003	Silver	ND		mg/kg	0.67	EPA 6010
ACMW3S01P	7/7/2003	Mercury	ND	U J	mg/kg	0.158	EPA 7471
ACMW3S01P	7/7/2003	4,4'-DDD	ND		mg/kg	0.0037	EPA 8081A
ACMW3S01P	7/7/2003	4,4'-DDE	ND		mg/kg	0.0037	EPA 8081A

APPENDIX E
SOIL ANALYTICAL RESULTS
Remedial Investigation Report
Arkansas City MGP Site

Sample Location	Date	Parameter	conc		Units	Reporting Limit[1]	Method
ACMW3S01P	7/7/2003	4,4'-DDT	ND		mg/kg	0.0037	EPA 8081A
ACMW3S01P	7/7/2003	Aldrin	ND		mg/kg	0.0019	EPA 8081A
ACMW3S01P	7/7/2003	alpha-BHC	ND		mg/kg	0.0019	EPA 8081A
ACMW3S01P	7/7/2003	alpha-Chlordane	ND		mg/kg	0.0019	EPA 8081A
ACMW3S01P	7/7/2003	beta-BHC	ND		mg/kg	0.0019	EPA 8081A
ACMW3S01P	7/7/2003	Chlordane	ND		mg/kg	0.0076	EPA 8081A
ACMW3S01P	7/7/2003	delta-BHC	ND		mg/kg	0.0019	EPA 8081A
ACMW3S01P	7/7/2003	Dieldrin	ND		mg/kg	0.0037	EPA 8081A
ACMW3S01P	7/7/2003	Endosulfan I	ND		mg/kg	0.0019	EPA 8081A
ACMW3S01P	7/7/2003	Endosulfan II	ND		mg/kg	0.0037	EPA 8081A
ACMW3S01P	7/7/2003	Endosulfan sulfate	ND		mg/kg	0.019	EPA 8081A
ACMW3S01P	7/7/2003	Endrin	ND		mg/kg	0.0037	EPA 8081A
ACMW3S01P	7/7/2003	Endrin aldehyde	ND		mg/kg	0.0037	EPA 8081A
ACMW3S01P	7/7/2003	Endrin ketone	ND		mg/kg	0.0037	EPA 8081A
ACMW3S01P	7/7/2003	gamma-BHC (Lindane)	ND		mg/kg	0.0019	EPA 8081A
ACMW3S01P	7/7/2003	gamma-Chlordane	ND		mg/kg	0.0019	EPA 8081A
ACMW3S01P	7/7/2003	Heptachlor	ND		mg/kg	0.0019	EPA 8081A
ACMW3S01P	7/7/2003	Heptachlor epoxide	ND		mg/kg	0.0019	EPA 8081A
ACMW3S01P	7/7/2003	Methoxychlor	ND		mg/kg	0.019	EPA 8081A
ACMW3S01P	7/7/2003	Toxaphene	ND		mg/kg	0.094	EPA 8081A
ACMW3S01P	7/7/2003	1,1,1,2-Tetrachloroethane	ND		mg/kg	0.0056	EPA 8260
ACMW3S01P	7/7/2003	1,1,1-Trichloroethane	ND		mg/kg	0.0056	EPA 8260
ACMW3S01P	7/7/2003	1,1,2,2-Tetrachloroethane	ND		mg/kg	0.0056	EPA 8260
ACMW3S01P	7/7/2003	1,1,2-Trichloroethane	ND		mg/kg	0.0056	EPA 8260
ACMW3S01P	7/7/2003	1,1-Dichloroethane	ND		mg/kg	0.0056	EPA 8260
ACMW3S01P	7/7/2003	1,1-Dichloroethene	ND		mg/kg	0.0056	EPA 8260
ACMW3S01P	7/7/2003	1,1-Dichloropropene	ND		mg/kg	0.0056	EPA 8260
ACMW3S01P	7/7/2003	1,2,3-Trichlorobenzene	ND		mg/kg	0.0056	EPA 8260
ACMW3S01P	7/7/2003	1,2,3-Trichloropropane	ND	U J	mg/kg	0.0056	EPA 8260
ACMW3S01P	7/7/2003	1,2,4-Trichlorobenzene	0.0061		mg/kg	0.0056	EPA 8260
ACMW3S01P	7/7/2003	1,2,4-Trimethylbenzene	ND		mg/kg	0.0056	EPA 8260
ACMW3S01P	7/7/2003	1,2-Dibromo-3-chloropropane	ND		mg/kg	0.0056	EPA 8260
ACMW3S01P	7/7/2003	1,2-Dibromoethane (EDB)	ND		mg/kg	0.0056	EPA 8260
ACMW3S01P	7/7/2003	1,2-Dichlorobenzene	ND		mg/kg	0.0056	EPA 8260
ACMW3S01P	7/7/2003	1,2-Dichloroethane	ND		mg/kg	0.0056	EPA 8260
ACMW3S01P	7/7/2003	1,2-Dichloropropane	ND		mg/kg	0.0056	EPA 8260
ACMW3S01P	7/7/2003	1,3,5-Trimethylbenzene	ND		mg/kg	0.0056	EPA 8260
ACMW3S01P	7/7/2003	1,3-Dichlorobenzene	ND		mg/kg	0.0056	EPA 8260
ACMW3S01P	7/7/2003	1,3-Dichloropropane	ND		mg/kg	0.0056	EPA 8260
ACMW3S01P	7/7/2003	1,4-Dichlorobenzene	ND		mg/kg	0.0056	EPA 8260
ACMW3S01P	7/7/2003	2,2-Dichloropropane	ND		mg/kg	0.0056	EPA 8260
ACMW3S01P	7/7/2003	2-Butanone (MEK)	ND		mg/kg	0.011	EPA 8260
ACMW3S01P	7/7/2003	2-Chloroethylvinyl ether	ND		mg/kg	0.0056	EPA 8260
ACMW3S01P	7/7/2003	2-Chlorotoluene	ND		mg/kg	0.0056	EPA 8260
ACMW3S01P	7/7/2003	2-Hexanone	ND		mg/kg	0.11	EPA 8260
ACMW3S01P	7/7/2003	4-Chlorotoluene	ND		mg/kg	0.0056	EPA 8260

APPENDIX E
SOIL ANALYTICAL RESULTS
Remedial Investigation Report
Arkansas City MGP Site

Sample Location	Date	Parameter	conc		Units	Reporting Limit[1]	Method
ACMW3S01P	7/7/2003	4-Methyl-2-pentanone (MIBK)	ND		mg/kg	0.011	EPA 8260
ACMW3S01P	7/7/2003	Acetone	ND		mg/kg	0.023	EPA 8260
ACMW3S01P	7/7/2003	Benzene	ND		mg/kg	0.0056	EPA 8260
ACMW3S01P	7/7/2003	Bromobenzene	ND		mg/kg	0.0056	EPA 8260
ACMW3S01P	7/7/2003	Bromochloromethane	ND		mg/kg	0.0056	EPA 8260
ACMW3S01P	7/7/2003	Bromodichloromethane	ND		mg/kg	0.0056	EPA 8260
ACMW3S01P	7/7/2003	Bromoform	ND		mg/kg	0.0056	EPA 8260
ACMW3S01P	7/7/2003	Bromomethane	ND		mg/kg	0.0056	EPA 8260
ACMW3S01P	7/7/2003	Carbon tetrachloride	ND		mg/kg	0.0056	EPA 8260
ACMW3S01P	7/7/2003	Chlorobenzene	ND		mg/kg	0.0056	EPA 8260
ACMW3S01P	7/7/2003	Chloroethane	ND		mg/kg	0.0056	EPA 8260
ACMW3S01P	7/7/2003	Chloroform	ND		mg/kg	0.0056	EPA 8260
ACMW3S01P	7/7/2003	Chloromethane	ND	U J	mg/kg	0.0056	EPA 8260
ACMW3S01P	7/7/2003	cis-1,2-Dichloroethene	ND		mg/kg	0.0056	EPA 8260
ACMW3S01P	7/7/2003	cis-1,3-Dichloropropene	ND		mg/kg	0.0056	EPA 8260
ACMW3S01P	7/7/2003	Dibromochloromethane	ND		mg/kg	0.0056	EPA 8260
ACMW3S01P	7/7/2003	Dibromomethane	ND		mg/kg	0.0056	EPA 8260
ACMW3S01P	7/7/2003	Dichlorodifluoromethane	ND		mg/kg	0.0056	EPA 8260
ACMW3S01P	7/7/2003	Ethylbenzene	ND		mg/kg	0.0056	EPA 8260
ACMW3S01P	7/7/2003	Hexachloro-1,3-butadiene	0.011	J	mg/kg	0.0056	EPA 8260
ACMW3S01P	7/7/2003	Isopropylbenzene	ND		mg/kg	0.0056	EPA 8260
ACMW3S01P	7/7/2003	m/p-xylene	ND		mg/kg	0.0056	EPA 8260
ACMW3S01P	7/7/2003	Methyl tert-butyl ether	ND		mg/kg	0.0056	EPA 8260
ACMW3S01P	7/7/2003	Methylene chloride	ND		mg/kg	0.0056	EPA 8260
ACMW3S01P	7/7/2003	Naphthalene	ND		mg/kg	0.011	EPA 8260
ACMW3S01P	7/7/2003	n-Butylbenzene	ND		mg/kg	0.0056	EPA 8260
ACMW3S01P	7/7/2003	n-Propylbenzene	ND		mg/kg	0.0056	EPA 8260
ACMW3S01P	7/7/2003	o-Xylene	ND		mg/kg	0.0056	EPA 8260
ACMW3S01P	7/7/2003	p-Isopropyltoluene	ND		mg/kg	0.0056	EPA 8260
ACMW3S01P	7/7/2003	sec-Butylbenzene	ND		mg/kg	0.0056	EPA 8260
ACMW3S01P	7/7/2003	Styrene	ND		mg/kg	0.0056	EPA 8260
ACMW3S01P	7/7/2003	tert-Butylbenzene	ND		mg/kg	0.0056	EPA 8260
ACMW3S01P	7/7/2003	Tetrachloroethene	ND		mg/kg	0.0056	EPA 8260
ACMW3S01P	7/7/2003	Toluene	ND		mg/kg	0.0056	EPA 8260
ACMW3S01P	7/7/2003	trans-1,2-Dichloroethene	ND		mg/kg	0.0056	EPA 8260
ACMW3S01P	7/7/2003	trans-1,3-Dichloropropene	ND		mg/kg	0.0056	EPA 8260
ACMW3S01P	7/7/2003	Trichloroethene	ND		mg/kg	0.0056	EPA 8260
ACMW3S01P	7/7/2003	Trichlorofluoromethane	ND		mg/kg	0.0056	EPA 8260
ACMW3S01P	7/7/2003	Vinyl chloride	ND		mg/kg	0.0056	EPA 8260
ACMW3S01P	7/7/2003	1,2,4-Trichlorobenzene	ND		mg/kg	0.37	EPA 8270
ACMW3S01P	7/7/2003	1,2-Dichlorobenzene	ND		mg/kg	0.37	EPA 8270
ACMW3S01P	7/7/2003	1,3-Dichlorobenzene	ND		mg/kg	0.37	EPA 8270
ACMW3S01P	7/7/2003	1,4-Dichlorobenzene	ND		mg/kg	0.37	EPA 8270
ACMW3S01P	7/7/2003	1-Bromo-4-phenoxybenzene	ND		mg/kg	0.37	EPA 8270
ACMW3S01P	7/7/2003	2,4,5-Trichlorophenol	ND		mg/kg	0.37	EPA 8270
ACMW3S01P	7/7/2003	2,4,6-Trichlorophenol	ND		mg/kg	0.37	EPA 8270

APPENDIX E
SOIL ANALYTICAL RESULTS
Remedial Investigation Report
Arkansas City MGP Site

Sample Location	Date	Parameter	conc		Units	Reporting Limit[1]	Method
ACMW3S01P	7/7/2003	2,4-Dichlorophenol	ND		mg/kg	0.37	EPA 8270
ACMW3S01P	7/7/2003	2,4-Dimethylphenol	ND		mg/kg	0.37	EPA 8270
ACMW3S01P	7/7/2003	2,4-Dinitrophenol	ND		mg/kg	1.8	EPA 8270
ACMW3S01P	7/7/2003	2,4-Dinitrotoluene	ND		mg/kg	0.37	EPA 8270
ACMW3S01P	7/7/2003	2,6-Dinitrotoluene	ND		mg/kg	0.37	EPA 8270
ACMW3S01P	7/7/2003	2-Chloronaphthalene	ND		mg/kg	0.37	EPA 8270
ACMW3S01P	7/7/2003	2-Chlorophenol	ND		mg/kg	0.37	EPA 8270
ACMW3S01P	7/7/2003	2-Methylnaphthalene	ND		mg/kg	0.37	EPA 8270
ACMW3S01P	7/7/2003	2-Methylphenol (o-cresol)	ND		mg/kg	0.37	EPA 8270
ACMW3S01P	7/7/2003	2-Nitroaniline	ND		mg/kg	1.8	EPA 8270
ACMW3S01P	7/7/2003	2-Nitrophenol	ND		mg/kg	0.37	EPA 8270
ACMW3S01P	7/7/2003	3,3'-Dichlorobenzidine	ND	U J	mg/kg	0.74	EPA 8270
ACMW3S01P	7/7/2003	3-Nitroaniline	ND		mg/kg	1.8	EPA 8270
ACMW3S01P	7/7/2003	4,6-Dinitro-2-methylphenol	ND		mg/kg	1.8	EPA 8270
ACMW3S01P	7/7/2003	4-Chloro-3-methylphenol	ND		mg/kg	0.74	EPA 8270
ACMW3S01P	7/7/2003	4-Chloroaniline	ND		mg/kg	0.74	EPA 8270
ACMW3S01P	7/7/2003	4-Chlorophenylphenyl ether	ND		mg/kg	0.37	EPA 8270
ACMW3S01P	7/7/2003	4-Methylphenol	ND		mg/kg	0.37	EPA 8270
ACMW3S01P	7/7/2003	4-Nitroaniline	ND	U J	mg/kg	1.8	EPA 8270
ACMW3S01P	7/7/2003	4-Nitrophenol	ND		mg/kg	1.8	EPA 8270
ACMW3S01P	7/7/2003	Acenaphthene	ND		mg/kg	0.37	EPA 8270
ACMW3S01P	7/7/2003	Acenaphthylene	ND		mg/kg	0.37	EPA 8270
ACMW3S01P	7/7/2003	Anthracene	ND		mg/kg	0.37	EPA 8270
ACMW3S01P	7/7/2003	Benzo(a)anthracene	ND		mg/kg	0.37	EPA 8270
ACMW3S01P	7/7/2003	Benzo(a)pyrene	ND		mg/kg	0.37	EPA 8270
ACMW3S01P	7/7/2003	Benzo(b)fluoranthene	ND	U J	mg/kg	0.37	EPA 8270
ACMW3S01P	7/7/2003	Benzo(g,h,i)perylene	ND		mg/kg	0.37	EPA 8270
ACMW3S01P	7/7/2003	Benzo(k)fluoranthene	ND	U J	mg/kg	0.37	EPA 8270
ACMW3S01P	7/7/2003	Benzoic acid	ND		mg/kg	1.8	EPA 8270
ACMW3S01P	7/7/2003	Benzyl alcohol	ND		mg/kg	0.74	EPA 8270
ACMW3S01P	7/7/2003	Bis(2-chloroethoxy)methane	ND		mg/kg	0.37	EPA 8270
ACMW3S01P	7/7/2003	bis(2-Chloroethyl) ether	ND		mg/kg	0.37	EPA 8270
ACMW3S01P	7/7/2003	Bis(2-chloroisopropyl) ether	ND		mg/kg	0.37	EPA 8270
ACMW3S01P	7/7/2003	Bis(2-ethylhexyl)phthalate	ND		mg/kg	0.37	EPA 8270
ACMW3S01P	7/7/2003	Butylbenzylphthalate	ND	U J	mg/kg	0.37	EPA 8270
ACMW3S01P	7/7/2003	Chrysene	ND		mg/kg	0.37	EPA 8270
ACMW3S01P	7/7/2003	Dibenzo(a,h)anthracene	ND		mg/kg	0.37	EPA 8270
ACMW3S01P	7/7/2003	Dibenzofuran	ND		mg/kg	0.37	EPA 8270
ACMW3S01P	7/7/2003	Diethylphthalate	ND		mg/kg	0.37	EPA 8270
ACMW3S01P	7/7/2003	Dimethylphthalate	ND		mg/kg	0.37	EPA 8270
ACMW3S01P	7/7/2003	Di-n-butylphthalate	ND		mg/kg	0.37	EPA 8270
ACMW3S01P	7/7/2003	Di-n-octylphthalate	ND		mg/kg	0.37	EPA 8270
ACMW3S01P	7/7/2003	Fluoranthene	ND		mg/kg	0.37	EPA 8270
ACMW3S01P	7/7/2003	Fluorene	ND		mg/kg	0.37	EPA 8270
ACMW3S01P	7/7/2003	Hexachloro-1,3-butadiene	ND		mg/kg	0.37	EPA 8270
ACMW3S01P	7/7/2003	Hexachlorobenzene	ND		mg/kg	0.37	EPA 8270

APPENDIX E
SOIL ANALYTICAL RESULTS
Remedial Investigation Report
Arkansas City MGP Site

Sample Location	Date	Parameter	conc		Units	Reporting Limit[1]	Method
ACMW3S01P	7/7/2003	Hexachlorocyclopentadiene	ND		mg/kg	0.37	EPA 8270
ACMW3S01P	7/7/2003	Hexachloroethane	ND		mg/kg	0.37	EPA 8270
ACMW3S01P	7/7/2003	Indeno(1,2,3-cd)pyrene	ND		mg/kg	0.37	EPA 8270
ACMW3S01P	7/7/2003	Isophorone	ND		mg/kg	0.37	EPA 8270
ACMW3S01P	7/7/2003	Naphthalene	ND		mg/kg	0.37	EPA 8270
ACMW3S01P	7/7/2003	Nitrobenzene	ND		mg/kg	0.37	EPA 8270
ACMW3S01P	7/7/2003	N-Nitroso-di-n-propylamine	ND		mg/kg	0.37	EPA 8270
ACMW3S01P	7/7/2003	N-Nitrosodiphenylamine	ND		mg/kg	0.37	EPA 8270
ACMW3S01P	7/7/2003	Pentachlorophenol	ND		mg/kg	1.8	EPA 8270
ACMW3S01P	7/7/2003	Phenanthrene	ND		mg/kg	0.37	EPA 8270
ACMW3S01P	7/7/2003	Phenol	ND		mg/kg	0.37	EPA 8270
ACMW3S01P	7/7/2003	Pyrene	ND		mg/kg	0.37	EPA 8270
ACMW3S02P	7/7/2003	Cyanide	ND		mg/kg	0.0576	EPA 335.3
ACMW3S02P	7/7/2003	Arsenic	1.15	J	mg/kg	1.09	EPA 6010
ACMW3S02P	7/7/2003	Barium	81.9	J	mg/kg	1.09	EPA 6010
ACMW3S02P	7/7/2003	Cadmium	ND	U J	mg/kg	0.543	EPA 6010
ACMW3S02P	7/7/2003	Chromium	9.87	J	mg/kg	0.543	EPA 6010
ACMW3S02P	7/7/2003	Lead	8.15	J	mg/kg	0.543	EPA 6010
ACMW3S02P	7/7/2003	Selenium	9.09	J	mg/kg	1.63	EPA 6010
ACMW3S02P	7/7/2003	Silver	ND		mg/kg	0.76	EPA 6010
ACMW3S02P	7/7/2003	Mercury	ND	U J	mg/kg	0.169	EPA 7471
ACMW3S02P	7/7/2003	4,4'-DDD	ND		mg/kg	0.0038	EPA 8081A
ACMW3S02P	7/7/2003	4,4'-DDE	ND		mg/kg	0.0038	EPA 8081A
ACMW3S02P	7/7/2003	4,4'-DDT	ND		mg/kg	0.0038	EPA 8081A
ACMW3S02P	7/7/2003	Aldrin	ND		mg/kg	0.0020	EPA 8081A
ACMW3S02P	7/7/2003	alpha-BHC	ND		mg/kg	0.0020	EPA 8081A
ACMW3S02P	7/7/2003	alpha-Chlordane	ND		mg/kg	0.0020	EPA 8081A
ACMW3S02P	7/7/2003	beta-BHC	ND		mg/kg	0.0020	EPA 8081A
ACMW3S02P	7/7/2003	Chlordane	ND		mg/kg	0.0077	EPA 8081A
ACMW3S02P	7/7/2003	delta-BHC	ND		mg/kg	0.0020	EPA 8081A
ACMW3S02P	7/7/2003	Dieldrin	ND		mg/kg	0.0038	EPA 8081A
ACMW3S02P	7/7/2003	Endosulfan I	ND		mg/kg	0.0020	EPA 8081A
ACMW3S02P	7/7/2003	Endosulfan II	ND		mg/kg	0.0038	EPA 8081A
ACMW3S02P	7/7/2003	Endosulfan sulfate	ND		mg/kg	0.020	EPA 8081A
ACMW3S02P	7/7/2003	Endrin	ND		mg/kg	0.0038	EPA 8081A
ACMW3S02P	7/7/2003	Endrin aldehyde	ND		mg/kg	0.0038	EPA 8081A
ACMW3S02P	7/7/2003	Endrin ketone	ND		mg/kg	0.0038	EPA 8081A
ACMW3S02P	7/7/2003	gamma-BHC (Lindane)	ND		mg/kg	0.0020	EPA 8081A
ACMW3S02P	7/7/2003	gamma-Chlordane	ND		mg/kg	0.0020	EPA 8081A
ACMW3S02P	7/7/2003	Heptachlor	ND		mg/kg	0.0020	EPA 8081A
ACMW3S02P	7/7/2003	Heptachlor epoxide	ND		mg/kg	0.0020	EPA 8081A
ACMW3S02P	7/7/2003	Methoxychlor	ND		mg/kg	0.020	EPA 8081A
ACMW3S02P	7/7/2003	Toxaphene	ND		mg/kg	0.096	EPA 8081A
ACMW3S02P	7/7/2003	1,1,1,2-Tetrachloroethane	ND		mg/kg	0.0056	EPA 8260
ACMW3S02P	7/7/2003	1,1,1-Trichloroethane	ND		mg/kg	0.0056	EPA 8260
ACMW3S02P	7/7/2003	1,1,2,2-Tetrachloroethane	ND		mg/kg	0.0056	EPA 8260

APPENDIX E
SOIL ANALYTICAL RESULTS
Remedial Investigation Report
Arkansas City MGP Site

Sample Location	Date	Parameter	conc		Units	Reporting Limit[1]	Method
ACMW3S02P	7/7/2003	1,1,2-Trichloroethane	ND		mg/kg	0.0056	EPA 8260
ACMW3S02P	7/7/2003	1,1-Dichloroethane	ND		mg/kg	0.0056	EPA 8260
ACMW3S02P	7/7/2003	1,1-Dichloroethene	ND		mg/kg	0.0056	EPA 8260
ACMW3S02P	7/7/2003	1,1-Dichloropropene	ND		mg/kg	0.0056	EPA 8260
ACMW3S02P	7/7/2003	1,2,3-Trichlorobenzene	ND		mg/kg	0.0056	EPA 8260
ACMW3S02P	7/7/2003	1,2,3-Trichloropropane	ND	U J	mg/kg	0.0056	EPA 8260
ACMW3S02P	7/7/2003	1,2,4-Trichlorobenzene	ND		mg/kg	0.0056	EPA 8260
ACMW3S02P	7/7/2003	1,2,4-Trimethylbenzene	ND		mg/kg	0.0056	EPA 8260
ACMW3S02P	7/7/2003	1,2-Dibromo-3-chloropropane	ND		mg/kg	0.0056	EPA 8260
ACMW3S02P	7/7/2003	1,2-Dibromoethane (EDB)	ND		mg/kg	0.0056	EPA 8260
ACMW3S02P	7/7/2003	1,2-Dichlorobenzene	ND		mg/kg	0.0056	EPA 8260
ACMW3S02P	7/7/2003	1,2-Dichloroethane	ND		mg/kg	0.0056	EPA 8260
ACMW3S02P	7/7/2003	1,2-Dichloropropane	ND		mg/kg	0.0056	EPA 8260
ACMW3S02P	7/7/2003	1,3,5-Trimethylbenzene	ND		mg/kg	0.0056	EPA 8260
ACMW3S02P	7/7/2003	1,3-Dichlorobenzene	ND		mg/kg	0.0056	EPA 8260
ACMW3S02P	7/7/2003	1,3-Dichloropropane	ND		mg/kg	0.0056	EPA 8260
ACMW3S02P	7/7/2003	1,4-Dichlorobenzene	ND		mg/kg	0.0056	EPA 8260
ACMW3S02P	7/7/2003	2,2-Dichloropropane	ND		mg/kg	0.0056	EPA 8260
ACMW3S02P	7/7/2003	2-Butanone (MEK)	ND		mg/kg	0.011	EPA 8260
ACMW3S02P	7/7/2003	2-Chloroethylvinyl ether	ND		mg/kg	0.0056	EPA 8260
ACMW3S02P	7/7/2003	2-Chlorotoluene	ND		mg/kg	0.0056	EPA 8260
ACMW3S02P	7/7/2003	2-Hexanone	ND		mg/kg	0.11	EPA 8260
ACMW3S02P	7/7/2003	4-Chlorotoluene	ND		mg/kg	0.0056	EPA 8260
ACMW3S02P	7/7/2003	4-Methyl-2-pentanone (MIBK)	ND		mg/kg	0.011	EPA 8260
ACMW3S02P	7/7/2003	Acetone	ND		mg/kg	0.023	EPA 8260
ACMW3S02P	7/7/2003	Benzene	ND		mg/kg	0.0056	EPA 8260
ACMW3S02P	7/7/2003	Bromobenzene	ND		mg/kg	0.0056	EPA 8260
ACMW3S02P	7/7/2003	Bromochloromethane	ND		mg/kg	0.0056	EPA 8260
ACMW3S02P	7/7/2003	Bromodichloromethane	ND		mg/kg	0.0056	EPA 8260
ACMW3S02P	7/7/2003	Bromoform	ND		mg/kg	0.0056	EPA 8260
ACMW3S02P	7/7/2003	Bromomethane	ND		mg/kg	0.0056	EPA 8260
ACMW3S02P	7/7/2003	Carbon tetrachloride	ND		mg/kg	0.0056	EPA 8260
ACMW3S02P	7/7/2003	Chlorobenzene	ND		mg/kg	0.0056	EPA 8260
ACMW3S02P	7/7/2003	Chloroethane	ND		mg/kg	0.0056	EPA 8260
ACMW3S02P	7/7/2003	Chloroform	ND		mg/kg	0.0056	EPA 8260
ACMW3S02P	7/7/2003	Chloromethane	ND	U J	mg/kg	0.0056	EPA 8260
ACMW3S02P	7/7/2003	cis-1,2-Dichloroethene	ND		mg/kg	0.0056	EPA 8260
ACMW3S02P	7/7/2003	cis-1,3-Dichloropropene	ND		mg/kg	0.0056	EPA 8260
ACMW3S02P	7/7/2003	Dibromochloromethane	ND		mg/kg	0.0056	EPA 8260
ACMW3S02P	7/7/2003	Dibromomethane	ND		mg/kg	0.0056	EPA 8260
ACMW3S02P	7/7/2003	Dichlorodifluoromethane	ND		mg/kg	0.0056	EPA 8260
ACMW3S02P	7/7/2003	Ethylbenzene	ND		mg/kg	0.0056	EPA 8260
ACMW3S02P	7/7/2003	Hexachloro-1,3-butadiene	ND	U J	mg/kg	0.0056	EPA 8260
ACMW3S02P	7/7/2003	Isopropylbenzene	ND		mg/kg	0.0056	EPA 8260
ACMW3S02P	7/7/2003	m/p-xylene	ND		mg/kg	0.0056	EPA 8260
ACMW3S02P	7/7/2003	Methyl tert-butyl ether	ND		mg/kg	0.0056	EPA 8260

APPENDIX E
SOIL ANALYTICAL RESULTS
Remedial Investigation Report
Arkansas City MGP Site

Sample Location	Date	Parameter	conc		Units	Reporting Limit[1]	Method
ACMW3S02P	7/7/2003	Methylene chloride	ND		mg/kg	0.0056	EPA 8260
ACMW3S02P	7/7/2003	Naphthalene	ND		mg/kg	0.011	EPA 8260
ACMW3S02P	7/7/2003	n-Butylbenzene	ND		mg/kg	0.0056	EPA 8260
ACMW3S02P	7/7/2003	n-Propylbenzene	ND		mg/kg	0.0056	EPA 8260
ACMW3S02P	7/7/2003	o-Xylene	ND		mg/kg	0.0056	EPA 8260
ACMW3S02P	7/7/2003	p-Isopropyltoluene	ND		mg/kg	0.0056	EPA 8260
ACMW3S02P	7/7/2003	sec-Butylbenzene	ND		mg/kg	0.0056	EPA 8260
ACMW3S02P	7/7/2003	Styrene	ND		mg/kg	0.0056	EPA 8260
ACMW3S02P	7/7/2003	tert-Butylbenzene	ND		mg/kg	0.0056	EPA 8260
ACMW3S02P	7/7/2003	Tetrachloroethene	ND		mg/kg	0.0056	EPA 8260
ACMW3S02P	7/7/2003	Toluene	ND		mg/kg	0.0056	EPA 8260
ACMW3S02P	7/7/2003	trans-1,2-Dichloroethene	ND		mg/kg	0.0056	EPA 8260
ACMW3S02P	7/7/2003	trans-1,3-Dichloropropene	ND		mg/kg	0.0056	EPA 8260
ACMW3S02P	7/7/2003	Trichloroethene	ND		mg/kg	0.0056	EPA 8260
ACMW3S02P	7/7/2003	Trichlorofluoromethane	ND		mg/kg	0.0056	EPA 8260
ACMW3S02P	7/7/2003	Vinyl chloride	ND		mg/kg	0.0056	EPA 8260
ACMW3S02P	7/7/2003	1,2,4-Trichlorobenzene	ND		mg/kg	0.38	EPA 8270
ACMW3S02P	7/7/2003	1,2-Dichlorobenzene	ND		mg/kg	0.38	EPA 8270
ACMW3S02P	7/7/2003	1,3-Dichlorobenzene	ND		mg/kg	0.38	EPA 8270
ACMW3S02P	7/7/2003	1,4-Dichlorobenzene	ND		mg/kg	0.38	EPA 8270
ACMW3S02P	7/7/2003	1-Bromo-4-phenoxybenzene	ND		mg/kg	0.38	EPA 8270
ACMW3S02P	7/7/2003	2,4,5-Trichlorophenol	ND		mg/kg	0.38	EPA 8270
ACMW3S02P	7/7/2003	2,4,6-Trichlorophenol	ND		mg/kg	0.38	EPA 8270
ACMW3S02P	7/7/2003	2,4-Dichlorophenol	ND		mg/kg	0.38	EPA 8270
ACMW3S02P	7/7/2003	2,4-Dimethylphenol	ND		mg/kg	0.38	EPA 8270
ACMW3S02P	7/7/2003	2,4-Dinitrophenol	ND		mg/kg	1.8	EPA 8270
ACMW3S02P	7/7/2003	2,4-Dinitrotoluene	ND		mg/kg	0.38	EPA 8270
ACMW3S02P	7/7/2003	2,6-Dinitrotoluene	ND		mg/kg	0.38	EPA 8270
ACMW3S02P	7/7/2003	2-Chloronaphthalene	ND		mg/kg	0.38	EPA 8270
ACMW3S02P	7/7/2003	2-Chlorophenol	ND		mg/kg	0.38	EPA 8270
ACMW3S02P	7/7/2003	2-Methylnaphthalene	ND		mg/kg	0.38	EPA 8270
ACMW3S02P	7/7/2003	2-Methylphenol (o-cresol)	ND		mg/kg	0.38	EPA 8270
ACMW3S02P	7/7/2003	2-Nitroaniline	ND		mg/kg	1.8	EPA 8270
ACMW3S02P	7/7/2003	2-Nitrophenol	ND		mg/kg	0.38	EPA 8270
ACMW3S02P	7/7/2003	3,3'-Dichlorobenzidine	ND	U J	mg/kg	0.76	EPA 8270
ACMW3S02P	7/7/2003	3-Nitroaniline	ND		mg/kg	1.8	EPA 8270
ACMW3S02P	7/7/2003	4,6-Dinitro-2-methylphenol	ND		mg/kg	1.8	EPA 8270
ACMW3S02P	7/7/2003	4-Chloro-3-methylphenol	ND		mg/kg	0.76	EPA 8270
ACMW3S02P	7/7/2003	4-Chloroaniline	ND		mg/kg	0.76	EPA 8270
ACMW3S02P	7/7/2003	4-Chlorophenylphenyl ether	ND		mg/kg	0.38	EPA 8270
ACMW3S02P	7/7/2003	4-Methylphenol	ND		mg/kg	0.38	EPA 8270
ACMW3S02P	7/7/2003	4-Nitroaniline	ND	U J	mg/kg	1.8	EPA 8270
ACMW3S02P	7/7/2003	4-Nitrophenol	ND		mg/kg	1.8	EPA 8270
ACMW3S02P	7/7/2003	Acenaphthene	ND		mg/kg	0.38	EPA 8270
ACMW3S02P	7/7/2003	Acenaphthylene	ND		mg/kg	0.38	EPA 8270
ACMW3S02P	7/7/2003	Anthracene	ND		mg/kg	0.38	EPA 8270

APPENDIX E
SOIL ANALYTICAL RESULTS
Remedial Investigation Report
Arkansas City MGP Site

Sample Location	Date	Parameter	conc		Units	Reporting Limit[1]	Method
ACMW3S02P	7/7/2003	Benzo(a)anthracene	ND		mg/kg	0.38	EPA 8270
ACMW3S02P	7/7/2003	Benzo(a)pyrene	ND		mg/kg	0.38	EPA 8270
ACMW3S02P	7/7/2003	Benzo(b)fluoranthene	ND	U J	mg/kg	0.38	EPA 8270
ACMW3S02P	7/7/2003	Benzo(g,h,i)perylene	ND		mg/kg	0.38	EPA 8270
ACMW3S02P	7/7/2003	Benzo(k)fluoranthene	ND	U J	mg/kg	0.38	EPA 8270
ACMW3S02P	7/7/2003	Benzoic acid	ND		mg/kg	1.8	EPA 8270
ACMW3S02P	7/7/2003	Benzyl alcohol	ND		mg/kg	0.76	EPA 8270
ACMW3S02P	7/7/2003	Bis(2-chloroethoxy)methane	ND		mg/kg	0.38	EPA 8270
ACMW3S02P	7/7/2003	bis(2-Chloroethyl) ether	ND		mg/kg	0.38	EPA 8270
ACMW3S02P	7/7/2003	Bis(2-chloroisopropyl) ether	ND		mg/kg	0.38	EPA 8270
ACMW3S02P	7/7/2003	Bis(2-ethylhexyl)phthalate	ND		mg/kg	0.38	EPA 8270
ACMW3S02P	7/7/2003	Butylbenzylphthalate	ND	U J	mg/kg	0.38	EPA 8270
ACMW3S02P	7/7/2003	Chrysene	ND		mg/kg	0.38	EPA 8270
ACMW3S02P	7/7/2003	Dibenzo(a,h)anthracene	ND		mg/kg	0.38	EPA 8270
ACMW3S02P	7/7/2003	Dibenzofuran	ND		mg/kg	0.38	EPA 8270
ACMW3S02P	7/7/2003	Diethylphthalate	ND		mg/kg	0.38	EPA 8270
ACMW3S02P	7/7/2003	Dimethylphthalate	ND		mg/kg	0.38	EPA 8270
ACMW3S02P	7/7/2003	Di-n-butylphthalate	ND		mg/kg	0.38	EPA 8270
ACMW3S02P	7/7/2003	Di-n-octylphthalate	ND		mg/kg	0.38	EPA 8270
ACMW3S02P	7/7/2003	Fluoranthene	ND		mg/kg	0.38	EPA 8270
ACMW3S02P	7/7/2003	Fluorene	ND		mg/kg	0.38	EPA 8270
ACMW3S02P	7/7/2003	Hexachloro-1,3-butadiene	ND		mg/kg	0.38	EPA 8270
ACMW3S02P	7/7/2003	Hexachlorobenzene	ND		mg/kg	0.38	EPA 8270
ACMW3S02P	7/7/2003	Hexachlorocyclopentadiene	ND		mg/kg	0.38	EPA 8270
ACMW3S02P	7/7/2003	Hexachloroethane	ND		mg/kg	0.38	EPA 8270
ACMW3S02P	7/7/2003	Indeno(1,2,3-cd)pyrene	ND		mg/kg	0.38	EPA 8270
ACMW3S02P	7/7/2003	Isophorone	ND		mg/kg	0.38	EPA 8270
ACMW3S02P	7/7/2003	Naphthalene	ND		mg/kg	0.38	EPA 8270
ACMW3S02P	7/7/2003	Nitrobenzene	ND		mg/kg	0.38	EPA 8270
ACMW3S02P	7/7/2003	N-Nitroso-di-n-propylamine	ND		mg/kg	0.38	EPA 8270
ACMW3S02P	7/7/2003	N-Nitrosodiphenylamine	ND		mg/kg	0.38	EPA 8270
ACMW3S02P	7/7/2003	Pentachlorophenol	ND		mg/kg	1.8	EPA 8270
ACMW3S02P	7/7/2003	Phenanthrene	ND		mg/kg	0.38	EPA 8270
ACMW3S02P	7/7/2003	Phenol	ND		mg/kg	0.38	EPA 8270
ACMW3S02P	7/7/2003	Pyrene	ND		mg/kg	0.38	EPA 8270
ACMW3SS1501P	7/7/2003	Acenaphthene	ND		mg/kg	0.024	EPA 8310
ACMW3SS1501P	7/7/2003	Acenaphthylene	ND		mg/kg	0.047	EPA 8310
ACMW3SS1501P	7/7/2003	Anthracene	0.015	J	mg/kg	0.0042	EPA 8310
ACMW3SS1501P	7/7/2003	Benzo(a)anthracene	0.054		mg/kg	0.0064	EPA 8310
ACMW3SS1501P	7/7/2003	Benzo(a)pyrene	0.073		mg/kg	0.0085	EPA 8310
ACMW3SS1501P	7/7/2003	Benzo(b)fluoranthene	0.052		mg/kg	0.0048	EPA 8310
ACMW3SS1501P	7/7/2003	Benzo(g,h,i)perylene	0.020	J	mg/kg	0.016	EPA 8310
ACMW3SS1501P	7/7/2003	Benzo(k)fluoranthene	0.026		mg/kg	0.0042	EPA 8310
ACMW3SS1501P	7/7/2003	Chrysene	0.071		mg/kg	0.0048	EPA 8310
ACMW3SS1501P	7/7/2003	Dibenzo(a,h)anthracene	ND		mg/kg	0.014	EPA 8310
ACMW3SS1501P	7/7/2003	Fluoranthene	0.13		mg/kg	0.011	EPA 8310

APPENDIX E
SOIL ANALYTICAL RESULTS
Remedial Investigation Report
Arkansas City MGP Site

Sample Location	Date	Parameter	conc			Units	Reporting Limit[1]	Method
ACMW3SS1501P	7/7/2003	Fluorene	ND			mg/kg	0.022	EPA 8310
ACMW3SS1501P	7/7/2003	Indeno(1,2,3-cd)pyrene	0.083			mg/kg	0.0058	EPA 8310
ACMW3SS1501P	7/7/2003	Naphthalene	ND			mg/kg	0.069	EPA 8310
ACMW3SS1501P	7/7/2003	Phenanthrene	0.044			mg/kg	0.0074	EPA 8310
ACMW3SS1501P	7/7/2003	Pyrene	0.091			mg/kg	0.0058	EPA 8310
ACMW4S01P	7/7/2003	Cyanide	ND			mg/kg	0.056	EPA 335.3
ACMW4S01P	7/7/2003	Arsenic	11.5		J	mg/kg	0.957	EPA 6010
ACMW4S01P	7/7/2003	Barium	235		J	mg/kg	0.957	EPA 6010
ACMW4S01P	7/7/2003	Cadmium	ND	U	J	mg/kg	0.479	EPA 6010
ACMW4S01P	7/7/2003	Chromium	12.9		J	mg/kg	0.479	EPA 6010
ACMW4S01P	7/7/2003	Lead	371		J	mg/kg	0.479	EPA 6010
ACMW4S01P	7/7/2003	Selenium	41		J	mg/kg	1.44	EPA 6010
ACMW4S01P	7/7/2003	Silver	0.835		J	mg/kg	0.67	EPA 6010
ACMW4S01P	7/7/2003	Mercury	0.418		J	mg/kg	0.15	EPA 7471
ACMW4S01P	7/7/2003	Benzene	ND	U	J	mg/kg	0.056	EPA 8260
ACMW4S01P	7/7/2003	Ethylbenzene	ND	U	J	mg/kg	0.056	EPA 8260
ACMW4S01P	7/7/2003	Toluene	ND	U	J	mg/kg	0.056	EPA 8260
ACMW4S01P	7/7/2003	Xylenes	ND			mg/kg	0.17	EPA 8260
ACMW4S01P	7/7/2003	Acenaphthene	ND			mg/kg	0.050	EPA 8310
ACMW4S01P	7/7/2003	Acenaphthylene	ND			mg/kg	0.10	EPA 8310
ACMW4S01P	7/7/2003	Anthracene	0.056			mg/kg	0.0089	EPA 8310
ACMW4S01P	7/7/2003	Benzo(a)anthracene	0.22			mg/kg	0.013	EPA 8310
ACMW4S01P	7/7/2003	Benzo(a)pyrene	0.32			mg/kg	0.018	EPA 8310
ACMW4S01P	7/7/2003	Benzo(b)fluoranthene	0.18			mg/kg	0.010	EPA 8310
ACMW4S01P	7/7/2003	Benzo(g,h,i)perylene	0.49			mg/kg	0.034	EPA 8310
ACMW4S01P	7/7/2003	Benzo(k)fluoranthene	0.12		J	mg/kg	0.0089	EPA 8310
ACMW4S01P	7/7/2003	Chrysene	0.27			mg/kg	0.010	EPA 8310
ACMW4S01P	7/7/2003	Dibenzo(a,h)anthracene	0.29			mg/kg	0.029	EPA 8310
ACMW4S01P	7/7/2003	Fluoranthene	0.42			mg/kg	0.023	EPA 8310
ACMW4S01P	7/7/2003	Fluorene	ND			mg/kg	0.047	EPA 8310
ACMW4S01P	7/7/2003	Indeno(1,2,3-cd)pyrene	0.042			mg/kg	0.012	EPA 8310
ACMW4S01P	7/7/2003	Naphthalene	ND			mg/kg	0.15	EPA 8310
ACMW4S01P	7/7/2003	Phenanthrene	0.14		U	mg/kg	0.056	EPA 8310
ACMW4S01P	7/7/2003	Pyrene	0.34			mg/kg	0.012	EPA 8310
ACMW4S02P	7/7/2003	Cyanide	ND			mg/kg	0.0593	EPA 335.3
ACMW4S02P	7/7/2003	Arsenic	2.52		J	mg/kg	1.14	EPA 6010
ACMW4S02P	7/7/2003	Barium	114		J	mg/kg	1.14	EPA 6010
ACMW4S02P	7/7/2003	Cadmium	ND	U	J	mg/kg	0.571	EPA 6010
ACMW4S02P	7/7/2003	Chromium	9.81		J	mg/kg	0.571	EPA 6010
ACMW4S02P	7/7/2003	Lead	7.79		J	mg/kg	0.571	EPA 6010
ACMW4S02P	7/7/2003	Selenium	9.18		J	mg/kg	1.71	EPA 6010
ACMW4S02P	7/7/2003	Silver	ND			mg/kg	0.799	EPA 6010
ACMW4S02P	7/7/2003	Mercury	ND	U	J	mg/kg	0.183	EPA 7471
ACMW4S02P	7/7/2003	Benzene	ND	U	J	mg/kg	0.059	EPA 8260
ACMW4S02P	7/7/2003	Ethylbenzene	ND	U	J	mg/kg	0.059	EPA 8260
ACMW4S02P	7/7/2003	Toluene	ND	U	J	mg/kg	0.059	EPA 8260

APPENDIX E
SOIL ANALYTICAL RESULTS
Remedial Investigation Report
Arkansas City MGP Site

Sample Location	Date	Parameter	conc	Units	Reporting Limit[1]	Method
ACMW4S02P	7/7/2003	Xylenes	ND	mg/kg	0.18	EPA 8260
ACMW4S02P	7/7/2003	Acenaphthene	ND	mg/kg	0.0053	EPA 8310
ACMW4S02P	7/7/2003	Acenaphthylene	ND	mg/kg	0.011	EPA 8310
ACMW4S02P	7/7/2003	Anthracene	ND	mg/kg	0.00095	EPA 8310
ACMW4S02P	7/7/2003	Benzo(a)anthracene	ND	mg/kg	0.0014	EPA 8310
ACMW4S02P	7/7/2003	Benzo(a)pyrene	ND	mg/kg	0.0019	EPA 8310
ACMW4S02P	7/7/2003	Benzo(b)fluoranthene	ND	mg/kg	0.0011	EPA 8310
ACMW4S02P	7/7/2003	Benzo(g,h,i)perylene	ND	mg/kg	0.0036	EPA 8310
ACMW4S02P	7/7/2003	Benzo(k)fluoranthene	ND	mg/kg	0.00095	EPA 8310
ACMW4S02P	7/7/2003	Chrysene	ND	mg/kg	0.0011	EPA 8310
ACMW4S02P	7/7/2003	Dibenzo(a,h)anthracene	ND	mg/kg	0.0031	EPA 8310
ACMW4S02P	7/7/2003	Fluoranthene	ND	mg/kg	0.0025	EPA 8310
ACMW4S02P	7/7/2003	Fluorene	ND	mg/kg	0.0050	EPA 8310
ACMW4S02P	7/7/2003	Indeno(1,2,3-cd)pyrene	ND	mg/kg	0.0013	EPA 8310
ACMW4S02P	7/7/2003	Naphthalene	ND	mg/kg	0.016	EPA 8310
ACMW4S02P	7/7/2003	Phenanthrene	ND	mg/kg	0.0017	EPA 8310
ACMW4S02P	7/7/2003	Pyrene	ND	mg/kg	0.0013	EPA 8310
ACMW4SS1501P	7/7/2003	Acenaphthene	ND	mg/kg	0.026	EPA 8310
ACMW4SS1501P	7/7/2003	Acenaphthylene	ND	mg/kg	0.051	EPA 8310
ACMW4SS1501P	7/7/2003	Anthracene	0.0082 J	mg/kg	0.0046	EPA 8310
ACMW4SS1501P	7/7/2003	Benzo(a)anthracene	0.037	mg/kg	0.0069	EPA 8310
ACMW4SS1501P	7/7/2003	Benzo(a)pyrene	0.059	mg/kg	0.0092	EPA 8310
ACMW4SS1501P	7/7/2003	Benzo(b)fluoranthene	0.040	mg/kg	0.0052	EPA 8310
ACMW4SS1501P	7/7/2003	Benzo(g,h,i)perylene	ND	mg/kg	0.017	EPA 8310
ACMW4SS1501P	7/7/2003	Benzo(k)fluoranthene	0.020	mg/kg	0.0046	EPA 8310
ACMW4SS1501P	7/7/2003	Chrysene	0.045	mg/kg	0.0052	EPA 8310
ACMW4SS1501P	7/7/2003	Dibenzo(a,h)anthracene	ND	mg/kg	0.015	EPA 8310
ACMW4SS1501P	7/7/2003	Fluoranthene	0.066	mg/kg	0.012	EPA 8310
ACMW4SS1501P	7/7/2003	Fluorene	ND	mg/kg	0.024	EPA 8310
ACMW4SS1501P	7/7/2003	Indeno(1,2,3-cd)pyrene	0.068	mg/kg	0.0063	EPA 8310
ACMW4SS1501P	7/7/2003	Naphthalene	ND	mg/kg	0.075	EPA 8310
ACMW4SS1501P	7/7/2003	Phenanthrene	0.013 J	mg/kg	0.0081	EPA 8310
ACMW4SS1501P	7/7/2003	Pyrene	0.040	mg/kg	0.0063	EPA 8310
ACSP10S01P	7/8/2003	Benzene	ND	mg/kg	0.059	EPA 8260
ACSP10S01P	7/8/2003	Ethylbenzene	ND	mg/kg	0.059	EPA 8260
ACSP10S01P	7/8/2003	Toluene	ND	mg/kg	0.059	EPA 8260
ACSP10S01P	7/8/2003	Xylenes	ND	mg/kg	0.18	EPA 8260
ACSP10S01P	7/8/2003	Acenaphthene	ND	mg/kg	0.53	EPA 8310
ACSP10S01P	7/8/2003	Acenaphthylene	ND	mg/kg	1.0	EPA 8310
ACSP10S01P	7/8/2003	Anthracene	ND	mg/kg	0.094	EPA 8310
ACSP10S01P	7/8/2003	Benzo(a)anthracene	0.47 J	mg/kg	0.14	EPA 8310
ACSP10S01P	7/8/2003	Benzo(a)pyrene	0.57 J	mg/kg	0.19	EPA 8310
ACSP10S01P	7/8/2003	Benzo(b)fluoranthene	0.50	mg/kg	0.11	EPA 8310
ACSP10S01P	7/8/2003	Benzo(g,h,i)perylene	ND	mg/kg	0.35	EPA 8310
ACSP10S01P	7/8/2003	Benzo(k)fluoranthene	0.27 J	mg/kg	0.094	EPA 8310
ACSP10S01P	7/8/2003	Chrysene	0.40	mg/kg	0.11	EPA 8310

APPENDIX E
SOIL ANALYTICAL RESULTS
Remedial Investigation Report
Arkansas City MGP Site

Sample Location	Date	Parameter	conc		Units	Reporting Limit[1]	Method
ACSP10S01P	7/8/2003	Dibenzo(a,h)anthracene	ND		mg/kg	0.31	EPA 8310
ACSP10S01P	7/8/2003	Fluoranthene	0.71	J	mg/kg	0.25	EPA 8310
ACSP10S01P	7/8/2003	Fluorene	ND		mg/kg	0.49	EPA 8310
ACSP10S01P	7/8/2003	Indeno(1,2,3-cd)pyrene	1.4		mg/kg	0.13	EPA 8310
ACSP10S01P	7/8/2003	Naphthalene	ND		mg/kg	1.5	EPA 8310
ACSP10S01P	7/8/2003	Phenanthrene	0.16	U	mg/kg	0.59	EPA 8310
ACSP10S01P	7/8/2003	Pyrene	0.44	J	mg/kg	0.13	EPA 8310
ACSP10S01S01P	7/8/2003	Acenaphthene	ND		mg/kg	0.0052	EPA 8310
ACSP10S01S01P	7/8/2003	Acenaphthylene	ND		mg/kg	0.010	EPA 8310
ACSP10S01S01P	7/8/2003	Anthracene	0.0059		mg/kg	0.00093	EPA 8310
ACSP10S01S01P	7/8/2003	Benzo(a)anthracene	0.036		mg/kg	0.0014	EPA 8310
ACSP10S01S01P	7/8/2003	Benzo(a)pyrene	0.0071		mg/kg	0.0019	EPA 8310
ACSP10S01S01P	7/8/2003	Benzo(b)fluoranthene	0.054		mg/kg	0.0010	EPA 8310
ACSP10S01S01P	7/8/2003	Benzo(g,h,i)perylene	0.069		mg/kg	0.0035	EPA 8310
ACSP10S01S01P	7/8/2003	Benzo(k)fluoranthene	0.017		mg/kg	0.00093	EPA 8310
ACSP10S01S01P	7/8/2003	Chrysene	0.022		mg/kg	0.0010	EPA 8310
ACSP10S01S01P	7/8/2003	Dibenzo(a,h)anthracene	0.023		mg/kg	0.0030	EPA 8310
ACSP10S01S01P	7/8/2003	Fluoranthene	0.028		mg/kg	0.0024	EPA 8310
ACSP10S01S01P	7/8/2003	Fluorene	ND		mg/kg	0.0049	EPA 8310
ACSP10S01S01P	7/8/2003	Indeno(1,2,3-cd)pyrene	0.023		mg/kg	0.0013	EPA 8310
ACSP10S01S01P	7/8/2003	Naphthalene	ND		mg/kg	0.015	EPA 8310
ACSP10S01S01P	7/8/2003	Phenanthrene	0.019	U	mg/kg	0.0058	EPA 8310
ACSP10S01S01P	7/8/2003	Pyrene	0.066		mg/kg	0.013	EPA 8310
ACSP10S02P	7/8/2003	Benzene	ND		mg/kg	0.060	EPA 8260
ACSP10S02P	7/8/2003	Ethylbenzene	ND		mg/kg	0.060	EPA 8260
ACSP10S02P	7/8/2003	Toluene	ND		mg/kg	0.060	EPA 8260
ACSP10S02P	7/8/2003	Xylenes	ND		mg/kg	0.18	EPA 8260
ACSP10S02P	7/8/2003	Acenaphthene	ND		mg/kg	0.0054	EPA 8310
ACSP10S02P	7/8/2003	Acenaphthylene	ND		mg/kg	0.011	EPA 8310
ACSP10S02P	7/8/2003	Anthracene	ND		mg/kg	0.00096	EPA 8310
ACSP10S02P	7/8/2003	Benzo(a)anthracene	ND		mg/kg	0.0014	EPA 8310
ACSP10S02P	7/8/2003	Benzo(a)pyrene	ND		mg/kg	0.0019	EPA 8310
ACSP10S02P	7/8/2003	Benzo(b)fluoranthene	ND		mg/kg	0.0011	EPA 8310
ACSP10S02P	7/8/2003	Benzo(g,h,i)perylene	ND		mg/kg	0.0036	EPA 8310
ACSP10S02P	7/8/2003	Benzo(k)fluoranthene	ND		mg/kg	0.00096	EPA 8310
ACSP10S02P	7/8/2003	Chrysene	ND		mg/kg	0.0011	EPA 8310
ACSP10S02P	7/8/2003	Dibenzo(a,h)anthracene	ND		mg/kg	0.0031	EPA 8310
ACSP10S02P	7/8/2003	Fluoranthene	ND		mg/kg	0.0025	EPA 8310
ACSP10S02P	7/8/2003	Fluorene	ND		mg/kg	0.0051	EPA 8310
ACSP10S02P	7/8/2003	Indeno(1,2,3-cd)pyrene	ND	U J	mg/kg	0.0013	EPA 8310
ACSP10S02P	7/8/2003	Naphthalene	ND		mg/kg	0.016	EPA 8310
ACSP10S02P	7/8/2003	Phenanthrene	0.0078	U	mg/kg	0.006	EPA 8310
ACSP10S02P	7/8/2003	Pyrene	ND		mg/kg	0.0013	EPA 8310
ACSP11S01P	7/8/2003	Arsenic	1.41	J	mg/kg	0.949	EPA 6010
ACSP11S01P	7/8/2003	Barium	85.8	J	mg/kg	0.949	EPA 6010
ACSP11S01P	7/8/2003	Cadmium	ND		mg/kg	0.474	EPA 6010

APPENDIX E
SOIL ANALYTICAL RESULTS
Remedial Investigation Report
Arkansas City MGP Site

Sample Location	Date	Parameter	conc		Units	Reporting Limit[1]	Method
ACSP11S01P	7/8/2003	Chromium	9.45	J	mg/kg	0.474	EPA 6010
ACSP11S01P	7/8/2003	Lead	11.7	J	mg/kg	0.474	EPA 6010
ACSP11S01P	7/8/2003	Selenium	6.83	J	mg/kg	1.42	EPA 6010
ACSP11S01P	7/8/2003	Silver	ND		mg/kg	0.664	EPA 6010
ACSP11S01P	7/8/2003	Mercury	ND	U J	mg/kg	0.163	EPA 7471
ACSP11S01P	7/8/2003	Benzene	ND		mg/kg	0.058	EPA 8260
ACSP11S01P	7/8/2003	Ethylbenzene	ND		mg/kg	0.058	EPA 8260
ACSP11S01P	7/8/2003	Toluene	ND		mg/kg	0.058	EPA 8260
ACSP11S01P	7/8/2003	Xylenes	ND		mg/kg	0.17	EPA 8260
ACSP11S01P	7/8/2003	Acenaphthene	ND		mg/kg	0.0052	EPA 8310
ACSP11S01P	7/8/2003	Acenaphthylene	ND		mg/kg	0.010	EPA 8310
ACSP11S01P	7/8/2003	Anthracene	0.0046		mg/kg	0.00093	EPA 8310
ACSP11S01P	7/8/2003	Benzo(a)anthracene	0.029		mg/kg	0.0014	EPA 8310
ACSP11S01P	7/8/2003	Benzo(a)pyrene	0.035		mg/kg	0.0019	EPA 8310
ACSP11S01P	7/8/2003	Benzo(b)fluoranthene	0.062		mg/kg	0.0010	EPA 8310
ACSP11S01P	7/8/2003	Benzo(g,h,i)perylene	0.020		mg/kg	0.0035	EPA 8310
ACSP11S01P	7/8/2003	Benzo(k)fluoranthene	0.0058		mg/kg	0.00093	EPA 8310
ACSP11S01P	7/8/2003	Chrysene	0.019		mg/kg	0.0010	EPA 8310
ACSP11S01P	7/8/2003	Dibenzo(a,h)anthracene	0.033		mg/kg	0.0030	EPA 8310
ACSP11S01P	7/8/2003	Fluoranthene	0.015		mg/kg	0.0024	EPA 8310
ACSP11S01P	7/8/2003	Fluorene	ND		mg/kg	0.0049	EPA 8310
ACSP11S01P	7/8/2003	Indeno(1,2,3-cd)pyrene	ND		mg/kg	0.0013	EPA 8310
ACSP11S01P	7/8/2003	Naphthalene	ND	U J	mg/kg	0.015	EPA 8310
ACSP11S01P	7/8/2003	Phenanthrene	0.015	U	mg/kg	0.0058	EPA 8310
ACSP11S01PDL	7/8/2003	Pyrene	0.040		mg/kg	0.0064	EPA 8310
ACSP11S02P	7/8/2003	Arsenic	1.44	J	mg/kg	1.12	EPA 6010
ACSP11S02P	7/8/2003	Barium	83.1	J	mg/kg	1.12	EPA 6010
ACSP11S02P	7/8/2003	Cadmium	ND		mg/kg	0.562	EPA 6010
ACSP11S02P	7/8/2003	Chromium	7.98	J	mg/kg	0.562	EPA 6010
ACSP11S02P	7/8/2003	Lead	7.32	J	mg/kg	0.562	EPA 6010
ACSP11S02P	7/8/2003	Selenium	8.05	J	mg/kg	1.69	EPA 6010
ACSP11S02P	7/8/2003	Silver	ND		mg/kg	0.787	EPA 6010
ACSP11S02P	7/8/2003	Mercury	ND	U J	mg/kg	0.157	EPA 7471
ACSP11S02P	7/8/2003	Benzene	ND		mg/kg	0.058	EPA 8260
ACSP11S02P	7/8/2003	Ethylbenzene	ND		mg/kg	0.058	EPA 8260
ACSP11S02P	7/8/2003	Toluene	ND		mg/kg	0.058	EPA 8260
ACSP11S02P	7/8/2003	Xylenes	ND		mg/kg	0.18	EPA 8260
ACSP11S02P	7/8/2003	Acenaphthene	ND		mg/kg	0.0052	EPA 8310
ACSP11S02P	7/8/2003	Acenaphthylene	ND		mg/kg	0.010	EPA 8310
ACSP11S02P	7/8/2003	Anthracene	ND		mg/kg	0.00093	EPA 8310
ACSP11S02P	7/8/2003	Benzo(a)anthracene	ND		mg/kg	0.0014	EPA 8310
ACSP11S02P	7/8/2003	Benzo(a)pyrene	ND		mg/kg	0.0019	EPA 8310
ACSP11S02P	7/8/2003	Benzo(b)fluoranthene	0.0041		mg/kg	0.0010	EPA 8310
ACSP11S02P	7/8/2003	Benzo(g,h,i)perylene	ND		mg/kg	0.0035	EPA 8310
ACSP11S02P	7/8/2003	Benzo(k)fluoranthene	ND		mg/kg	0.00093	EPA 8310
ACSP11S02P	7/8/2003	Chrysene	0.0044		mg/kg	0.0010	EPA 8310

APPENDIX E
SOIL ANALYTICAL RESULTS
Remedial Investigation Report
Arkansas City MGP Site

Sample Location	Date	Parameter	conc		Units	Reporting Limit[1]	Method
ACSP11S02P	7/8/2003	Dibenzo(a,h)anthracene	ND		mg/kg	0.0030	EPA 8310
ACSP11S02P	7/8/2003	Fluoranthene	ND		mg/kg	0.0024	EPA 8310
ACSP11S02P	7/8/2003	Fluorene	ND		mg/kg	0.0049	EPA 8310
ACSP11S02P	7/8/2003	Indeno(1,2,3-cd)pyrene	0.0050		mg/kg	0.0013	EPA 8310
ACSP11S02P	7/8/2003	Naphthalene	ND		mg/kg	0.015	EPA 8310
ACSP11S02P	7/8/2003	Phenanthrene	0.012	U	mg/kg	0.0016	EPA 8310
ACSP11S02P	7/8/2003	Pyrene	0.0072		mg/kg	0.0013	EPA 8310
ACSP12S01P	7/8/2003	Benzene	ND	U J	mg/kg	0.055	EPA 8260
ACSP12S01P	7/8/2003	Ethylbenzene	ND	U J	mg/kg	0.055	EPA 8260
ACSP12S01P	7/8/2003	Toluene	ND	U J	mg/kg	0.055	EPA 8260
ACSP12S01P	7/8/2003	Xylenes	ND		mg/kg	0.16	EPA 8260
ACSP12S01P	7/8/2003	Acenaphthene	ND		mg/kg	0.050	EPA 8310
ACSP12S01P	7/8/2003	Acenaphthylene	ND		mg/kg	0.098	EPA 8310
ACSP12S01P	7/8/2003	Anthracene	0.031	J	mg/kg	0.0088	EPA 8310
ACSP12S01P	7/8/2003	Benzo(a)anthracene	0.12		mg/kg	0.013	EPA 8310
ACSP12S01P	7/8/2003	Benzo(a)pyrene	0.21		mg/kg	0.018	EPA 8310
ACSP12S01P	7/8/2003	Benzo(b)fluoranthene	0.15		mg/kg	0.0099	EPA 8310
ACSP12S01P	7/8/2003	Benzo(g,h,i)perylene	ND		mg/kg	0.033	EPA 8310
ACSP12S01P	7/8/2003	Benzo(k)fluoranthene	0.079		mg/kg	0.0088	EPA 8310
ACSP12S01P	7/8/2003	Chrysene	0.13		mg/kg	0.0099	EPA 8310
ACSP12S01P	7/8/2003	Dibenzo(a,h)anthracene	0.24		mg/kg	0.029	EPA 8310
ACSP12S01P	7/8/2003	Fluoranthene	0.21		mg/kg	0.023	EPA 8310
ACSP12S01P	7/8/2003	Fluorene	ND		mg/kg	0.046	EPA 8310
ACSP12S01P	7/8/2003	Indeno(1,2,3-cd)pyrene	0.31		mg/kg	0.012	EPA 8310
ACSP12S01P	7/8/2003	Naphthalene	ND		mg/kg	0.14	EPA 8310
ACSP12S01P	7/8/2003	Phenanthrene	0.040	J	mg/kg	0.015	EPA 8310
ACSP12S01P	7/8/2003	Pyrene	0.14		mg/kg	0.012	EPA 8310
ACSP12S02P	7/8/2003	Benzene	ND	U J	mg/kg	0.059	EPA 8260
ACSP12S02P	7/8/2003	Ethylbenzene	ND	U J	mg/kg	0.059	EPA 8260
ACSP12S02P	7/8/2003	Toluene	ND	U J	mg/kg	0.059	EPA 8260
ACSP12S02P	7/8/2003	Xylenes	ND		mg/kg	0.18	EPA 8260
ACSP12S02P	7/8/2003	Acenaphthene	ND		mg/kg	0.0053	EPA 8310
ACSP12S02P	7/8/2003	Acenaphthylene	ND		mg/kg	0.010	EPA 8310
ACSP12S02P	7/8/2003	Anthracene	ND		mg/kg	0.00094	EPA 8310
ACSP12S02P	7/8/2003	Benzo(a)anthracene	ND		mg/kg	0.0014	EPA 8310
ACSP12S02P	7/8/2003	Benzo(a)pyrene	ND		mg/kg	0.0019	EPA 8310
ACSP12S02P	7/8/2003	Benzo(b)fluoranthene	ND		mg/kg	0.0011	EPA 8310
ACSP12S02P	7/8/2003	Benzo(g,h,i)perylene	ND		mg/kg	0.0035	EPA 8310
ACSP12S02P	7/8/2003	Benzo(k)fluoranthene	ND		mg/kg	0.00094	EPA 8310
ACSP12S02P	7/8/2003	Chrysene	ND		mg/kg	0.0011	EPA 8310
ACSP12S02P	7/8/2003	Dibenzo(a,h)anthracene	ND		mg/kg	0.0031	EPA 8310
ACSP12S02P	7/8/2003	Fluoranthene	ND		mg/kg	0.0025	EPA 8310
ACSP12S02P	7/8/2003	Fluorene	ND		mg/kg	0.0050	EPA 8310
ACSP12S02P	7/8/2003	Indeno(1,2,3-cd)pyrene	ND		mg/kg	0.0013	EPA 8310
ACSP12S02P	7/8/2003	Naphthalene	ND		mg/kg	0.015	EPA 8310
ACSP12S02P	7/8/2003	Phenanthrene	ND		mg/kg	0.0017	EPA 8310

APPENDIX E
SOIL ANALYTICAL RESULTS
Remedial Investigation Report
Arkansas City MGP Site

Sample Location	Date	Parameter	conc		Units	Reporting Limit[1]	Method
ACSP12S02P	7/8/2003	Pyrene	ND		mg/kg	0.0013	EPA 8310
ACSP13S01P	7/8/2003	Arsenic	1.24	J	mg/kg	0.997	EPA 6010
ACSP13S01P	7/8/2003	Barium	86.5	J	mg/kg	0.997	EPA 6010
ACSP13S01P	7/8/2003	Cadmium	ND		mg/kg	0.499	EPA 6010
ACSP13S01P	7/8/2003	Chromium	9.72	J	mg/kg	0.499	EPA 6010
ACSP13S01P	7/8/2003	Lead	12.1	J	mg/kg	0.499	EPA 6010
ACSP13S01P	7/8/2003	Selenium	8.15	J	mg/kg	1.5	EPA 6010
ACSP13S01P	7/8/2003	Silver	ND		mg/kg	0.698	EPA 6010
ACSP13S01P	7/8/2003	Mercury	ND	U J	mg/kg	0.163	EPA 7471
ACSP13S01P	7/8/2003	Benzene	ND		mg/kg	0.058	EPA 8260
ACSP13S01P	7/8/2003	Ethylbenzene	ND		mg/kg	0.058	EPA 8260
ACSP13S01P	7/8/2003	Toluene	ND		mg/kg	0.058	EPA 8260
ACSP13S01P	7/8/2003	Xylenes	ND		mg/kg	0.17	EPA 8260
ACSP13S01P	7/8/2003	Acenaphthene	ND		mg/kg	0.052	EPA 8310
ACSP13S01P	7/8/2003	Acenaphthylene	ND		mg/kg	0.10	EPA 8310
ACSP13S01P	7/8/2003	Anthracene	0.018	J	mg/kg	0.0093	EPA 8310
ACSP13S01P	7/8/2003	Benzo(a)anthracene	0.11		mg/kg	0.014	EPA 8310
ACSP13S01P	7/8/2003	Benzo(a)pyrene	0.14		mg/kg	0.019	EPA 8310
ACSP13S01P	7/8/2003	Benzo(b)fluoranthene	0.18		mg/kg	0.010	EPA 8310
ACSP13S01P	7/8/2003	Benzo(g,h,i)perylene	ND		mg/kg	0.035	EPA 8310
ACSP13S01P	7/8/2003	Benzo(k)fluoranthene	0.088		mg/kg	0.0093	EPA 8310
ACSP13S01P	7/8/2003	Chrysene	0.14		mg/kg	0.010	EPA 8310
ACSP13S01P	7/8/2003	Dibenzo(a,h)anthracene	0.16		mg/kg	0.030	EPA 8310
ACSP13S01P	7/8/2003	Fluoranthene	0.16		mg/kg	0.024	EPA 8310
ACSP13S01P	7/8/2003	Fluorene	ND		mg/kg	0.049	EPA 8310
ACSP13S01P	7/8/2003	Indeno(1,2,3-cd)pyrene	0.17		mg/kg	0.013	EPA 8310
ACSP13S01P	7/8/2003	Naphthalene	ND		mg/kg	0.15	EPA 8310
ACSP13S01P	7/8/2003	Phenanthrene	0.033	U	mg/kg	0.016	EPA 8310
ACSP13S01P	7/8/2003	Pyrene	0.14		mg/kg	0.013	EPA 8310
ACSP13S02P	7/8/2003	Arsenic	1.57	J	mg/kg	1.05	EPA 6010
ACSP13S02P	7/8/2003	Barium	75.7	J	mg/kg	1.05	EPA 6010
ACSP13S02P	7/8/2003	Cadmium	ND		mg/kg	0.524	EPA 6010
ACSP13S02P	7/8/2003	Chromium	11.3	J	mg/kg	0.524	EPA 6010
ACSP13S02P	7/8/2003	Lead	8.49	J	mg/kg	0.524	EPA 6010
ACSP13S02P	7/8/2003	Selenium	9.87	J	mg/kg	1.57	EPA 6010
ACSP13S02P	7/8/2003	Silver	ND		mg/kg	0.733	EPA 6010
ACSP13S02P	7/8/2003	Mercury	ND	U J	mg/kg	0.172	EPA 7471
ACSP13S02P	7/8/2003	Benzene	ND		mg/kg	0.058	EPA 8260
ACSP13S02P	7/8/2003	Ethylbenzene	ND		mg/kg	0.058	EPA 8260
ACSP13S02P	7/8/2003	Toluene	ND		mg/kg	0.058	EPA 8260
ACSP13S02P	7/8/2003	Xylenes	ND		mg/kg	0.18	EPA 8260
ACSP13S02P	7/8/2003	Acenaphthene	ND		mg/kg	0.0053	EPA 8310
ACSP13S02P	7/8/2003	Acenaphthylene	ND		mg/kg	0.010	EPA 8310
ACSP13S02P	7/8/2003	Anthracene	0.0078		mg/kg	0.00094	EPA 8310
ACSP13S02P	7/8/2003	Benzo(a)anthracene	0.018		mg/kg	0.0014	EPA 8310
ACSP13S02P	7/8/2003	Benzo(a)pyrene	0.016		mg/kg	0.0019	EPA 8310

APPENDIX E
SOIL ANALYTICAL RESULTS
Remedial Investigation Report
Arkansas City MGP Site

Sample Location	Date	Parameter	conc		Units	Reporting Limit[1]	Method
ACSP13S02P	7/8/2003	Benzo(b)fluoranthene	0.014		mg/kg	0.0011	EPA 8310
ACSP13S02P	7/8/2003	Benzo(g,h,i)perylene	ND		mg/kg	0.0035	EPA 8310
ACSP13S02P	7/8/2003	Benzo(k)fluoranthene	0.0083		mg/kg	0.00094	EPA 8310
ACSP13S02P	7/8/2003	Chrysene	0.016		mg/kg	0.0011	EPA 8310
ACSP13S02P	7/8/2003	Dibenzo(a,h)anthracene	ND		mg/kg	0.0030	EPA 8310
ACSP13S02P	7/8/2003	Fluoranthene	0.033		mg/kg	0.0025	EPA 8310
ACSP13S02P	7/8/2003	Fluorene	ND		mg/kg	0.0049	EPA 8310
ACSP13S02P	7/8/2003	Indeno(1,2,3-cd)pyrene	0.023		mg/kg	0.0013	EPA 8310
ACSP13S02P	7/8/2003	Naphthalene	ND		mg/kg	0.015	EPA 8310
ACSP13S02P	7/8/2003	Phenanthrene	0.030	U	mg/kg	0.0059	EPA 8310
ACSP13S02P	7/8/2003	Pyrene	0.036		mg/kg	0.0013	EPA 8310
ACSP14S01P	7/8/2003	Benzene	ND		mg/kg	0.059	EPA 8260
ACSP14S01P	7/8/2003	Ethylbenzene	ND		mg/kg	0.059	EPA 8260
ACSP14S01P	7/8/2003	Toluene	ND		mg/kg	0.059	EPA 8260
ACSP14S01P	7/8/2003	Xylenes	ND		mg/kg	0.18	EPA 8260
ACSP14S01P	7/8/2003	Acenaphthene	ND		mg/kg	0.0053	EPA 8310
ACSP14S01P	7/8/2003	Acenaphthylene	ND		mg/kg	0.011	EPA 8310
ACSP14S01P	7/8/2003	Anthracene	0.0056		mg/kg	0.00095	EPA 8310
ACSP14S01P	7/8/2003	Benzo(a)anthracene	0.023		mg/kg	0.0014	EPA 8310
ACSP14S01P	7/8/2003	Benzo(a)pyrene	0.025		mg/kg	0.0019	EPA 8310
ACSP14S01P	7/8/2003	Benzo(b)fluoranthene	0.020		mg/kg	0.0011	EPA 8310
ACSP14S01P	7/8/2003	Benzo(g,h,i)perylene	ND		mg/kg	0.0035	EPA 8310
ACSP14S01P	7/8/2003	Benzo(k)fluoranthene	0.011		mg/kg	0.00095	EPA 8310
ACSP14S01P	7/8/2003	Chrysene	0.028		mg/kg	0.0011	EPA 8310
ACSP14S01P	7/8/2003	Dibenzo(a,h)anthracene	0.036		mg/kg	0.0031	EPA 8310
ACSP14S01P	7/8/2003	Fluoranthene	0.044		mg/kg	0.0025	EPA 8310
ACSP14S01P	7/8/2003	Fluorene	ND		mg/kg	0.0050	EPA 8310
ACSP14S01P	7/8/2003	Indeno(1,2,3-cd)pyrene	ND		mg/kg	0.0013	EPA 8310
ACSP14S01P	7/8/2003	Naphthalene	ND	U J	mg/kg	0.015	EPA 8310
ACSP14S01P	7/8/2003	Phenanthrene	0.022	U	mg/kg	0.0059	EPA 8310
ACSP14S01P	7/8/2003	Pyrene	0.039		mg/kg	0.0013	EPA 8310
ACSP14S02P	7/8/2003	Benzene	ND		mg/kg	0.058	EPA 8260
ACSP14S02P	7/8/2003	Ethylbenzene	ND		mg/kg	0.058	EPA 8260
ACSP14S02P	7/8/2003	Toluene	ND		mg/kg	0.058	EPA 8260
ACSP14S02P	7/8/2003	Xylenes	ND		mg/kg	0.17	EPA 8260
ACSP14S02P	7/8/2003	Acenaphthene	ND		mg/kg	0.0052	EPA 8310
ACSP14S02P	7/8/2003	Acenaphthylene	ND		mg/kg	0.010	EPA 8310
ACSP14S02P	7/8/2003	Anthracene	ND		mg/kg	0.00092	EPA 8310
ACSP14S02P	7/8/2003	Benzo(a)anthracene	ND		mg/kg	0.0014	EPA 8310
ACSP14S02P	7/8/2003	Benzo(a)pyrene	ND		mg/kg	0.0018	EPA 8310
ACSP14S02P	7/8/2003	Benzo(b)fluoranthene	ND		mg/kg	0.0010	EPA 8310
ACSP14S02P	7/8/2003	Benzo(g,h,i)perylene	ND		mg/kg	0.0035	EPA 8310
ACSP14S02P	7/8/2003	Benzo(k)fluoranthene	ND		mg/kg	0.00092	EPA 8310
ACSP14S02P	7/8/2003	Chrysene	ND		mg/kg	0.0010	EPA 8310
ACSP14S02P	7/8/2003	Dibenzo(a,h)anthracene	ND		mg/kg	0.0030	EPA 8310
ACSP14S02P	7/8/2003	Fluoranthene	ND		mg/kg	0.0024	EPA 8310

APPENDIX E
SOIL ANALYTICAL RESULTS
Remedial Investigation Report
Arkansas City MGP Site

Sample Location	Date	Parameter	conc		Units	Reporting Limit[1]	Method
ACSP14S02P	7/8/2003	Fluorene	ND		mg/kg	0.0049	EPA 8310
ACSP14S02P	7/8/2003	Indeno(1,2,3-cd)pyrene	ND		mg/kg	0.0013	EPA 8310
ACSP14S02P	7/8/2003	Naphthalene	ND		mg/kg	0.015	EPA 8310
ACSP14S02P	7/8/2003	Phenanthrene	0.0088	U	mg/kg	0.0058	EPA 8310
ACSP14S02P	7/8/2003	Pyrene	ND		mg/kg	0.0013	EPA 8310
ACSP15S01P	7/8/2003	Benzene	ND	U J	mg/kg	0.058	EPA 8260
ACSP15S01P	7/8/2003	Ethylbenzene	ND	U J	mg/kg	0.058	EPA 8260
ACSP15S01P	7/8/2003	Toluene	ND	U J	mg/kg	0.058	EPA 8260
ACSP15S01P	7/8/2003	Xylenes	ND		mg/kg	0.17	EPA 8260
ACSP15S01P	7/8/2003	Acenaphthene	ND		mg/kg	0.0052	EPA 8310
ACSP15S01P	7/8/2003	Acenaphthylene	ND		mg/kg	0.010	EPA 8310
ACSP15S01P	7/8/2003	Anthracene	ND		mg/kg	0.00093	EPA 8310
ACSP15S01P	7/8/2003	Benzo(a)anthracene	ND		mg/kg	0.0014	EPA 8310
ACSP15S01P	7/8/2003	Benzo(a)pyrene	ND		mg/kg	0.0019	EPA 8310
ACSP15S01P	7/8/2003	Benzo(b)fluoranthene	ND		mg/kg	0.0010	EPA 8310
ACSP15S01P	7/8/2003	Benzo(g,h,i)perylene	ND		mg/kg	0.0035	EPA 8310
ACSP15S01P	7/8/2003	Benzo(k)fluoranthene	ND		mg/kg	0.00093	EPA 8310
ACSP15S01P	7/8/2003	Chrysene	ND		mg/kg	0.0010	EPA 8310
ACSP15S01P	7/8/2003	Dibenzo(a,h)anthracene	ND		mg/kg	0.0030	EPA 8310
ACSP15S01P	7/8/2003	Fluoranthene	ND		mg/kg	0.0024	EPA 8310
ACSP15S01P	7/8/2003	Fluorene	ND		mg/kg	0.0049	EPA 8310
ACSP15S01P	7/8/2003	Indeno(1,2,3-cd)pyrene	ND		mg/kg	0.0013	EPA 8310
ACSP15S01P	7/8/2003	Naphthalene	ND		mg/kg	0.015	EPA 8310
ACSP15S01P	7/8/2003	Phenanthrene	ND		mg/kg	0.0016	EPA 8310
ACSP15S01P	7/8/2003	Pyrene	ND		mg/kg	0.0013	EPA 8310
ACSP15S02P	7/8/2003	Benzene	ND	U J	mg/kg	0.058	EPA 8260
ACSP15S02P	7/8/2003	Ethylbenzene	ND	U J	mg/kg	0.058	EPA 8260
ACSP15S02P	7/8/2003	Toluene	ND	U J	mg/kg	0.058	EPA 8260
ACSP15S02P	7/8/2003	Xylenes	ND		mg/kg	0.17	EPA 8260
ACSP15S02P	7/8/2003	Acenaphthene	ND		mg/kg	0.0052	EPA 8310
ACSP15S02P	7/8/2003	Acenaphthylene	ND		mg/kg	0.010	EPA 8310
ACSP15S02P	7/8/2003	Anthracene	ND		mg/kg	0.00092	EPA 8310
ACSP15S02P	7/8/2003	Benzo(a)anthracene	ND		mg/kg	0.0014	EPA 8310
ACSP15S02P	7/8/2003	Benzo(a)pyrene	ND		mg/kg	0.0018	EPA 8310
ACSP15S02P	7/8/2003	Benzo(b)fluoranthene	ND		mg/kg	0.0010	EPA 8310
ACSP15S02P	7/8/2003	Benzo(g,h,i)perylene	ND		mg/kg	0.0035	EPA 8310
ACSP15S02P	7/8/2003	Benzo(k)fluoranthene	ND		mg/kg	0.00092	EPA 8310
ACSP15S02P	7/8/2003	Chrysene	ND		mg/kg	0.0010	EPA 8310
ACSP15S02P	7/8/2003	Dibenzo(a,h)anthracene	ND		mg/kg	0.0030	EPA 8310
ACSP15S02P	7/8/2003	Fluoranthene	ND		mg/kg	0.0024	EPA 8310
ACSP15S02P	7/8/2003	Fluorene	ND		mg/kg	0.0049	EPA 8310
ACSP15S02P	7/8/2003	Indeno(1,2,3-cd)pyrene	ND		mg/kg	0.0013	EPA 8310
ACSP15S02P	7/8/2003	Naphthalene	ND		mg/kg	0.015	EPA 8310
ACSP15S02P	7/8/2003	Phenanthrene	ND		mg/kg	0.0016	EPA 8310
ACSP15S02P	7/8/2003	Pyrene	ND		mg/kg	0.0013	EPA 8310
ACSP16S01P	7/9/2003	Benzene	ND	U J	mg/kg	0.061	EPA 8260

APPENDIX E
SOIL ANALYTICAL RESULTS
Remedial Investigation Report
Arkansas City MGP Site

Sample Location	Date	Parameter	conc		Units	Reporting Limit[1]	Method
ACSP16S01P	7/9/2003	Ethylbenzene	ND	U J	mg/kg	0.061	EPA 8260
ACSP16S01P	7/9/2003	Toluene	ND	U J	mg/kg	0.061	EPA 8260
ACSP16S01P	7/9/2003	Xylenes	ND		mg/kg	0.18	EPA 8260
ACSP16S01P	7/9/2003	Acenaphthene	ND		mg/kg	0.055	EPA 8310
ACSP16S01P	7/9/2003	Acenaphthylene	ND		mg/kg	0.11	EPA 8310
ACSP16S01P	7/9/2003	Anthracene	0.062		mg/kg	0.0098	EPA 8310
ACSP16S01P	7/9/2003	Benzo(a)anthracene	0.25		mg/kg	0.015	EPA 8310
ACSP16S01P	7/9/2003	Benzo(a)pyrene	0.26		mg/kg	0.020	EPA 8310
ACSP16S01P	7/9/2003	Benzo(b)fluoranthene	0.17		mg/kg	0.011	EPA 8310
ACSP16S01P	7/9/2003	Benzo(g,h,i)perylene	0.26		mg/kg	0.037	EPA 8310
ACSP16S01P	7/9/2003	Benzo(k)fluoranthene	0.12		mg/kg	0.0098	EPA 8310
ACSP16S01P	7/9/2003	Chrysene	0.24		mg/kg	0.011	EPA 8310
ACSP16S01P	7/9/2003	Dibenzo(a,h)anthracene	0.24		mg/kg	0.032	EPA 8310
ACSP16S01P	7/9/2003	Fluoranthene	0.47		mg/kg	0.026	EPA 8310
ACSP16S01P	7/9/2003	Fluorene	ND		mg/kg	0.052	EPA 8310
ACSP16S01P	7/9/2003	Indeno(1,2,3-cd)pyrene	ND		mg/kg	0.014	EPA 8310
ACSP16S01P	7/9/2003	Naphthalene	ND		mg/kg	0.16	EPA 8310
ACSP16S01P	7/9/2003	Phenanthrene	0.16	U	mg/kg	0.062	EPA 8310
ACSP16S01P	7/9/2003	Pyrene	0.34		mg/kg	0.014	EPA 8310
ACSP16S02P	7/9/2003	Benzene	ND	U J	mg/kg	0.062	EPA 8260
ACSP16S02P	7/9/2003	Ethylbenzene	ND	U J	mg/kg	0.062	EPA 8260
ACSP16S02P	7/9/2003	Toluene	ND	U J	mg/kg	0.062	EPA 8260
ACSP16S02P	7/9/2003	Xylenes	ND		mg/kg	0.18	EPA 8260
ACSP16S02P	7/9/2003	Acenaphthene	ND		mg/kg	0.0056	EPA 8310
ACSP16S02P	7/9/2003	Acenaphthylene	ND		mg/kg	0.011	EPA 8310
ACSP16S02P	7/9/2003	Anthracene	ND		mg/kg	0.00099	EPA 8310
ACSP16S02P	7/9/2003	Benzo(a)anthracene	ND		mg/kg	0.0015	EPA 8310
ACSP16S02P	7/9/2003	Benzo(a)pyrene	ND		mg/kg	0.0020	EPA 8310
ACSP16S02P	7/9/2003	Benzo(b)fluoranthene	ND		mg/kg	0.0011	EPA 8310
ACSP16S02P	7/9/2003	Benzo(g,h,i)perylene	ND		mg/kg	0.0037	EPA 8310
ACSP16S02P	7/9/2003	Benzo(k)fluoranthene	ND		mg/kg	0.00099	EPA 8310
ACSP16S02P	7/9/2003	Chrysene	ND		mg/kg	0.0011	EPA 8310
ACSP16S02P	7/9/2003	Dibenzo(a,h)anthracene	ND		mg/kg	0.0032	EPA 8310
ACSP16S02P	7/9/2003	Fluoranthene	ND		mg/kg	0.0026	EPA 8310
ACSP16S02P	7/9/2003	Fluorene	ND		mg/kg	0.0052	EPA 8310
ACSP16S02P	7/9/2003	Indeno(1,2,3-cd)pyrene	ND		mg/kg	0.0014	EPA 8310
ACSP16S02P	7/9/2003	Naphthalene	ND		mg/kg	0.016	EPA 8310
ACSP16S02P	7/9/2003	Phenanthrene	0.0071	U	mg/kg	0.0062	EPA 8310
ACSP16S02P	7/9/2003	Pyrene	ND		mg/kg	0.0014	EPA 8310
ACSP16SS1S01P	7/9/2003	Acenaphthene	ND		mg/kg	0.048	EPA 8310
ACSP16SS1S01P	7/9/2003	Acenaphthylene	ND		mg/kg	0.095	EPA 8310
ACSP16SS1S01P	7/9/2003	Anthracene	0.075		mg/kg	0.0086	EPA 8310
ACSP16SS1S01P	7/9/2003	Benzo(a)anthracene	0.15		mg/kg	0.013	EPA 8310
ACSP16SS1S01P	7/9/2003	Benzo(a)pyrene	0.15		mg/kg	0.017	EPA 8310
ACSP16SS1S01P	7/9/2003	Benzo(b)fluoranthene	0.13		mg/kg	0.0096	EPA 8310
ACSP16SS1S01P	7/9/2003	Benzo(g,h,i)perylene	0.18		mg/kg	0.032	EPA 8310

APPENDIX E
SOIL ANALYTICAL RESULTS
Remedial Investigation Report
Arkansas City MGP Site

Sample Location	Date	Parameter	conc		Units	Reporting Limit[1]	Method
ACSP16SS1S01P	7/9/2003	Benzo(k)fluoranthene	0.081		mg/kg	0.0086	EPA 8310
ACSP16SS1S01P	7/9/2003	Chrysene	0.14		mg/kg	0.0096	EPA 8310
ACSP16SS1S01P	7/9/2003	Dibenzo(a,h)anthracene	0.15		mg/kg	0.028	EPA 8310
ACSP16SS1S01P	7/9/2003	Fluoranthene	0.27		mg/kg	0.022	EPA 8310
ACSP16SS1S01P	7/9/2003	Fluorene	ND		mg/kg	0.045	EPA 8310
ACSP16SS1S01P	7/9/2003	Indeno(1,2,3-cd)pyrene	ND		mg/kg	0.012	EPA 8310
ACSP16SS1S01P	7/9/2003	Naphthalene	ND		mg/kg	0.14	EPA 8310
ACSP16SS1S01P	7/9/2003	Phenanthrene	0.22	U	mg/kg	0.053	EPA 8310
ACSP16SS1S01P	7/9/2003	Pyrene	0.80		mg/kg	0.12	EPA 8310
ACSP17S01D	7/7/2003	Benzene	ND	U J	mg/kg	0.057	EPA 8260
ACSP17S01D	7/7/2003	Ethylbenzene	ND	U J	mg/kg	0.057	EPA 8260
ACSP17S01D	7/7/2003	Toluene	ND	U J	mg/kg	0.057	EPA 8260
ACSP17S01D	7/7/2003	Xylenes	ND		mg/kg	0.17	EPA 8260
ACSP17S01D	7/7/2003	Acenaphthene	ND		mg/kg	0.0052	EPA 8310
ACSP17S01D	7/7/2003	Acenaphthylene	ND		mg/kg	0.010	EPA 8310
ACSP17S01D	7/7/2003	Anthracene	0.0078		mg/kg	0.00092	EPA 8310
ACSP17S01D	7/7/2003	Benzo(a)anthracene	0.036		mg/kg	0.0014	EPA 8310
ACSP17S01D	7/7/2003	Benzo(a)pyrene	0.028		mg/kg	0.0018	EPA 8310
ACSP17S01D	7/7/2003	Benzo(b)fluoranthene	0.036		mg/kg	0.0010	EPA 8310
ACSP17S01D	7/7/2003	Benzo(g,h,i)perylene	ND		mg/kg	0.0034	EPA 8310
ACSP17S01D	7/7/2003	Benzo(k)fluoranthene	0.022		mg/kg	0.00092	EPA 8310
ACSP17S01D	7/7/2003	Chrysene	0.030		mg/kg	0.0010	EPA 8310
ACSP17S01D	7/7/2003	Dibenzo(a,h)anthracene	ND		mg/kg	0.0030	EPA 8310
ACSP17S01D	7/7/2003	Fluoranthene	0.058		mg/kg	0.0024	EPA 8310
ACSP17S01D	7/7/2003	Fluorene	ND		mg/kg	0.0048	EPA 8310
ACSP17S01D	7/7/2003	Indeno(1,2,3-cd)pyrene	0.037		mg/kg	0.0013	EPA 8310
ACSP17S01D	7/7/2003	Naphthalene	ND		mg/kg	0.015	EPA 8310
ACSP17S01D	7/7/2003	Phenanthrene	0.030		mg/kg	0.0016	EPA 8310
ACSP17S01D	7/7/2003	Pyrene	0.038		mg/kg	0.0013	EPA 8310
ACSP17S01P	7/7/2003	Benzene	ND	U J	mg/kg	0.058	EPA 8260
ACSP17S01P	7/7/2003	Ethylbenzene	ND	U J	mg/kg	0.058	EPA 8260
ACSP17S01P	7/7/2003	Toluene	ND	U J	mg/kg	0.058	EPA 8260
ACSP17S01P	7/7/2003	Xylenes	ND		mg/kg	0.17	EPA 8260
ACSP17S01P	7/7/2003	Acenaphthene	ND		mg/kg	0.0052	EPA 8310
ACSP17S01P	7/7/2003	Acenaphthylene	ND		mg/kg	0.010	EPA 8310
ACSP17S01P	7/7/2003	Anthracene	ND		mg/kg	0.00093	EPA 8310
ACSP17S01P	7/7/2003	Benzo(a)anthracene	ND		mg/kg	0.0014	EPA 8310
ACSP17S01P	7/7/2003	Benzo(a)pyrene	ND		mg/kg	0.0019	EPA 8310
ACSP17S01P	7/7/2003	Benzo(b)fluoranthene	ND		mg/kg	0.0010	EPA 8310
ACSP17S01P	7/7/2003	Benzo(g,h,i)perylene	ND		mg/kg	0.0035	EPA 8310
ACSP17S01P	7/7/2003	Benzo(k)fluoranthene	ND		mg/kg	0.00093	EPA 8310
ACSP17S01P	7/7/2003	Chrysene	ND		mg/kg	0.0010	EPA 8310
ACSP17S01P	7/7/2003	Dibenzo(a,h)anthracene	ND		mg/kg	0.0030	EPA 8310
ACSP17S01P	7/7/2003	Fluoranthene	ND		mg/kg	0.0024	EPA 8310
ACSP17S01P	7/7/2003	Fluorene	ND		mg/kg	0.0049	EPA 8310
ACSP17S01P	7/7/2003	Indeno(1,2,3-cd)pyrene	ND		mg/kg	0.0013	EPA 8310

APPENDIX E
SOIL ANALYTICAL RESULTS
Remedial Investigation Report
Arkansas City MGP Site

Sample Location	Date	Parameter	conc		Units	Reporting Limit[1]	Method
ACSP17S01P	7/7/2003	Naphthalene	ND		mg/kg	0.015	EPA 8310
ACSP17S01P	7/7/2003	Phenanthrene	ND		mg/kg	0.0016	EPA 8310
ACSP17S01P	7/7/2003	Pyrene	ND		mg/kg	0.0013	EPA 8310
ACSP17S02P	7/7/2003	Benzene	ND	U J	mg/kg	0.059	EPA 8260
ACSP17S02P	7/7/2003	Ethylbenzene	ND	U J	mg/kg	0.059	EPA 8260
ACSP17S02P	7/7/2003	Toluene	ND	U J	mg/kg	0.059	EPA 8260
ACSP17S02P	7/7/2003	Xylenes	ND		mg/kg	0.18	EPA 8260
ACSP17S02P	7/7/2003	Acenaphthene	ND		mg/kg	0.0053	EPA 8310
ACSP17S02P	7/7/2003	Acenaphthylene	ND		mg/kg	0.010	EPA 8310
ACSP17S02P	7/7/2003	Anthracene	ND		mg/kg	0.00094	EPA 8310
ACSP17S02P	7/7/2003	Benzo(a)anthracene	ND		mg/kg	0.0014	EPA 8310
ACSP17S02P	7/7/2003	Benzo(a)pyrene	ND		mg/kg	0.0019	EPA 8310
ACSP17S02P	7/7/2003	Benzo(b)fluoranthene	ND		mg/kg	0.0011	EPA 8310
ACSP17S02P	7/7/2003	Benzo(g,h,i)perylene	ND		mg/kg	0.0035	EPA 8310
ACSP17S02P	7/7/2003	Benzo(k)fluoranthene	ND		mg/kg	0.00094	EPA 8310
ACSP17S02P	7/7/2003	Chrysene	ND		mg/kg	0.0011	EPA 8310
ACSP17S02P	7/7/2003	Dibenzo(a,h)anthracene	ND		mg/kg	0.0031	EPA 8310
ACSP17S02P	7/7/2003	Fluoranthene	ND		mg/kg	0.0025	EPA 8310
ACSP17S02P	7/7/2003	Fluorene	ND		mg/kg	0.0049	EPA 8310
ACSP17S02P	7/7/2003	Indeno(1,2,3-cd)pyrene	ND		mg/kg	0.0013	EPA 8310
ACSP17S02P	7/7/2003	Naphthalene	ND		mg/kg	0.015	EPA 8310
ACSP17S02P	7/7/2003	Phenanthrene	ND		mg/kg	0.0016	EPA 8310
ACSP17S02P	7/7/2003	Pyrene	ND		mg/kg	0.0013	EPA 8310
ACSP17SS1S01P	7/7/2003	Acenaphthene	ND		mg/kg	0.52	EPA 8310
ACSP17SS1S01P	7/7/2003	Acenaphthylene	ND		mg/kg	1.0	EPA 8310
ACSP17SS1S01P	7/7/2003	Anthracene	0.22	J	mg/kg	0.092	EPA 8310
ACSP17SS1S01P	7/7/2003	Benzo(a)anthracene	0.64		mg/kg	0.14	EPA 8310
ACSP17SS1S01P	7/7/2003	Benzo(a)pyrene	0.77		mg/kg	0.18	EPA 8310
ACSP17SS1S01P	7/7/2003	Benzo(b)fluoranthene	0.58		mg/kg	0.10	EPA 8310
ACSP17SS1S01P	7/7/2003	Benzo(g,h,i)perylene	ND		mg/kg	0.34	EPA 8310
ACSP17SS1S01P	7/7/2003	Benzo(k)fluoranthene	0.32	J	mg/kg	0.092	EPA 8310
ACSP17SS1S01P	7/7/2003	Chrysene	0.82		mg/kg	0.10	EPA 8310
ACSP17SS1S01P	7/7/2003	Dibenzo(a,h)anthracene	1.0	J	mg/kg	0.30	EPA 8310
ACSP17SS1S01P	7/7/2003	Fluoranthene	1.2		mg/kg	0.24	EPA 8310
ACSP17SS1S01P	7/7/2003	Fluorene	ND		mg/kg	0.48	EPA 8310
ACSP17SS1S01P	7/7/2003	Indeno(1,2,3-cd)pyrene	0.80		mg/kg	0.13	EPA 8310
ACSP17SS1S01P	7/7/2003	Naphthalene	ND		mg/kg	1.5	EPA 8310
ACSP17SS1S01P	7/7/2003	Phenanthrene	1.7		mg/kg	0.16	EPA 8310
ACSP17SS1S01P	7/7/2003	Pyrene	0.95		mg/kg	0.13	EPA 8310
ACSP18S01P	7/7/2003	Benzene	ND	U J	mg/kg	0.058	EPA 8260
ACSP18S01P	7/7/2003	Ethylbenzene	ND	U J	mg/kg	0.058	EPA 8260
ACSP18S01P	7/7/2003	Toluene	ND	U J	mg/kg	0.058	EPA 8260
ACSP18S01P	7/7/2003	Xylenes	ND		mg/kg	0.17	EPA 8260
ACSP18S01P	7/7/2003	Acenaphthene	ND		mg/kg	0.0052	EPA 8310
ACSP18S01P	7/7/2003	Acenaphthylene	ND		mg/kg	0.010	EPA 8310
ACSP18S01P	7/7/2003	Anthracene	0.028		mg/kg	0.00093	EPA 8310

APPENDIX E
SOIL ANALYTICAL RESULTS
Remedial Investigation Report
Arkansas City MGP Site

Sample Location	Date	Parameter	conc		Units	Reporting Limit[1]	Method
ACSP18S01PDL	7/7/2003	Benzo(a)anthracene	0.077		mg/kg	0.014	EPA 8310
ACSP18S01PDL	7/7/2003	Benzo(a)pyrene	0.074		mg/kg	0.019	EPA 8310
ACSP18S01P	7/7/2003	Benzo(b)fluoranthene	0.057		mg/kg	0.0010	EPA 8310
ACSP18S01P	7/7/2003	Benzo(g,h,i)perylene	ND		mg/kg	0.0035	EPA 8310
ACSP18S01P	7/7/2003	Benzo(k)fluoranthene	0.038		mg/kg	0.00093	EPA 8310
ACSP18S01PDL	7/7/2003	Chrysene	0.061		mg/kg	0.010	EPA 8310
ACSP18S01PDL	7/7/2003	Dibenzo(a,h)anthracene	0.067	J	mg/kg	0.030	EPA 8310
ACSP18S01PDL	7/7/2003	Fluoranthene	0.15		mg/kg	0.024	EPA 8310
ACSP18S01P	7/7/2003	Fluorene	ND		mg/kg	0.0049	EPA 8310
ACSP18S01P	7/7/2003	Indeno(1,2,3-cd)pyrene	0.038		mg/kg	0.0013	EPA 8310
ACSP18S01P	7/7/2003	Naphthalene	ND		mg/kg	0.015	EPA 8310
ACSP18S01PDL	7/7/2003	Phenanthrene	0.046	J	mg/kg	0.016	EPA 8310
ACSP18S01PDL	7/7/2003	Pyrene	0.097		mg/kg	0.013	EPA 8310
ACSP18S02P	7/7/2003	Benzene	ND	U J	mg/kg	0.057	EPA 8260
ACSP18S02P	7/7/2003	Ethylbenzene	ND	U J	mg/kg	0.057	EPA 8260
ACSP18S02P	7/7/2003	Toluene	ND	U J	mg/kg	0.057	EPA 8260
ACSP18S02P	7/7/2003	Xylenes	ND		mg/kg	0.17	EPA 8260
ACSP18S02P	7/7/2003	Acenaphthene	ND		mg/kg	0.0052	EPA 8310
ACSP18S02P	7/7/2003	Acenaphthylene	ND		mg/kg	0.010	EPA 8310
ACSP18S02P	7/7/2003	Anthracene	0.0041		mg/kg	0.00092	EPA 8310
ACSP18S02P	7/7/2003	Benzo(a)anthracene	0.029		mg/kg	0.0014	EPA 8310
ACSP18S02PDL	7/7/2003	Benzo(a)pyrene	0.059		mg/kg	0.0092	EPA 8310
ACSP18S02P	7/7/2003	Benzo(b)fluoranthene	0.040		mg/kg	0.0010	EPA 8310
ACSP18S02P	7/7/2003	Benzo(g,h,i)perylene	ND		mg/kg	0.0034	EPA 8310
ACSP18S02P	7/7/2003	Benzo(k)fluoranthene	0.020		mg/kg	0.00092	EPA 8310
ACSP18S02P	7/7/2003	Chrysene	0.036		mg/kg	0.0010	EPA 8310
ACSP18S02P	7/7/2003	Dibenzo(a,h)anthracene	0.013		mg/kg	0.0030	EPA 8310
ACSP18S02P	7/7/2003	Fluoranthene	0.041		mg/kg	0.0024	EPA 8310
ACSP18S02P	7/7/2003	Fluorene	ND		mg/kg	0.0048	EPA 8310
ACSP18S02PDL	7/7/2003	Indeno(1,2,3-cd)pyrene	0.10		mg/kg	0.0063	EPA 8310
ACSP18S02P	7/7/2003	Naphthalene	ND		mg/kg	0.015	EPA 8310
ACSP18S02P	7/7/2003	Phenanthrene	0.020		mg/kg	0.0016	EPA 8310
ACSP18S02P	7/7/2003	Pyrene	0.035		mg/kg	0.0013	EPA 8310
ACSP1S01P	7/9/2003	Benzene	ND	U J	mg/kg	0.056	EPA 8260
ACSP1S01P	7/9/2003	Ethylbenzene	ND	U J	mg/kg	0.056	EPA 8260
ACSP1S01P	7/9/2003	Toluene	ND	U J	mg/kg	0.056	EPA 8260
ACSP1S01P	7/9/2003	Xylenes	ND		mg/kg	0.17	EPA 8260
ACSP1S01P	7/9/2003	Acenaphthene	ND		mg/kg	0.0050	EPA 8310
ACSP1S01P	7/9/2003	Acenaphthylene	ND		mg/kg	0.0099	EPA 8310
ACSP1S01P	7/9/2003	Anthracene	ND		mg/kg	0.00089	EPA 8310
ACSP1S01P	7/9/2003	Benzo(a)anthracene	ND		mg/kg	0.0013	EPA 8310
ACSP1S01P	7/9/2003	Benzo(a)pyrene	ND		mg/kg	0.0018	EPA 8310
ACSP1S01P	7/9/2003	Benzo(b)fluoranthene	ND		mg/kg	0.0010	EPA 8310
ACSP1S01P	7/9/2003	Benzo(g,h,i)perylene	ND		mg/kg	0.0033	EPA 8310
ACSP1S01P	7/9/2003	Benzo(k)fluoranthene	ND		mg/kg	0.00089	EPA 8310
ACSP1S01P	7/9/2003	Chrysene	ND		mg/kg	0.0010	EPA 8310

APPENDIX E
SOIL ANALYTICAL RESULTS
Remedial Investigation Report
Arkansas City MGP Site

Sample Location	Date	Parameter	conc		Units	Reporting Limit[(1)]	Method
ACSP1S01P	7/9/2003	Dibenzo(a,h)anthracene	ND		mg/kg	0.0029	EPA 8310
ACSP1S01P	7/9/2003	Fluoranthene	ND		mg/kg	0.0023	EPA 8310
ACSP1S01P	7/9/2003	Fluorene	ND		mg/kg	0.0047	EPA 8310
ACSP1S01P	7/9/2003	Indeno(1,2,3-cd)pyrene	ND		mg/kg	0.0012	EPA 8310
ACSP1S01P	7/9/2003	Naphthalene	ND		mg/kg	0.015	EPA 8310
ACSP1S01P	7/9/2003	Phenanthrene	0.0062	U	mg/kg	0.0056	EPA 8310
ACSP1S01P	7/9/2003	Pyrene	ND		mg/kg	0.0012	EPA 8310
ACSP1S02P	7/9/2003	Benzene	ND	U J	mg/kg	0.057	EPA 8260
ACSP1S02P	7/9/2003	Ethylbenzene	ND	U J	mg/kg	0.057	EPA 8260
ACSP1S02P	7/9/2003	Toluene	ND	U J	mg/kg	0.057	EPA 8260
ACSP1S02P	7/9/2003	Xylenes	ND		mg/kg	0.17	EPA 8260
ACSP1S02P	7/9/2003	Acenaphthene	ND		mg/kg	0.0052	EPA 8310
ACSP1S02P	7/9/2003	Acenaphthylene	ND		mg/kg	0.010	EPA 8310
ACSP1S02P	7/9/2003	Anthracene	ND		mg/kg	0.00092	EPA 8310
ACSP1S02P	7/9/2003	Benzo(a)anthracene	ND		mg/kg	0.0014	EPA 8310
ACSP1S02P	7/9/2003	Benzo(a)pyrene	ND		mg/kg	0.0018	EPA 8310
ACSP1S02P	7/9/2003	Benzo(b)fluoranthene	ND		mg/kg	0.0010	EPA 8310
ACSP1S02P	7/9/2003	Benzo(g,h,i)perylene	ND		mg/kg	0.0034	EPA 8310
ACSP1S02P	7/9/2003	Benzo(k)fluoranthene	ND		mg/kg	0.00092	EPA 8310
ACSP1S02P	7/9/2003	Chrysene	ND		mg/kg	0.0010	EPA 8310
ACSP1S02P	7/9/2003	Dibenzo(a,h)anthracene	ND	U J	mg/kg	0.0030	EPA 8310
ACSP1S02P	7/9/2003	Fluoranthene	ND		mg/kg	0.0024	EPA 8310
ACSP1S02P	7/9/2003	Fluorene	ND		mg/kg	0.0048	EPA 8310
ACSP1S02P	7/9/2003	Indeno(1,2,3-cd)pyrene	ND		mg/kg	0.0013	EPA 8310
ACSP1S02P	7/9/2003	Naphthalene	ND		mg/kg	0.015	EPA 8310
ACSP1S02P	7/9/2003	Phenanthrene	0.0094	U	mg/kg	0.0057	EPA 8310
ACSP1S02P	7/9/2003	Pyrene	ND		mg/kg	0.0013	EPA 8310
ACSP2S01P	7/8/2003	Benzene	ND		mg/kg	0.055	EPA 8260
ACSP2S01P	7/8/2003	Ethylbenzene	ND		mg/kg	0.055	EPA 8260
ACSP2S01P	7/8/2003	Toluene	ND		mg/kg	0.055	EPA 8260
ACSP2S01P	7/8/2003	Xylenes	ND		mg/kg	0.16	EPA 8260
ACSP2S01P	7/8/2003	Acenaphthene	ND		mg/kg	0.0049	EPA 8310
ACSP2S01P	7/8/2003	Acenaphthylene	ND		mg/kg	0.0098	EPA 8310
ACSP2S01P	7/8/2003	Anthracene	0.022		mg/kg	0.00088	EPA 8310
ACSP2S01PDL	7/8/2003	Benzo(a)anthracene	0.062		mg/kg	0.0066	EPA 8310
ACSP2S01PDL	7/8/2003	Benzo(a)pyrene	0.074		mg/kg	0.0088	EPA 8310
ACSP2S01P	7/8/2003	Benzo(b)fluoranthene	0.057		mg/kg	0.00099	EPA 8310
ACSP2S01P	7/8/2003	Benzo(g,h,i)perylene	0.016		mg/kg	0.0033	EPA 8310
ACSP2S01P	7/8/2003	Benzo(k)fluoranthene	0.031		mg/kg	0.00088	EPA 8310
ACSP2S01PDL	7/8/2003	Chrysene	0.058		mg/kg	0.0049	EPA 8310
ACSP2S01P	7/8/2003	Dibenzo(a,h)anthracene	0.029		mg/kg	0.0029	EPA 8310
ACSP2S01PDL	7/8/2003	Fluoranthene	0.093		mg/kg	0.012	EPA 8310
ACSP2S01P	7/8/2003	Fluorene	ND		mg/kg	0.0046	EPA 8310
ACSP2S01PDL	7/8/2003	Indeno(1,2,3-cd)pyrene	0.010	J	mg/kg	0.0060	EPA 8310
ACSP2S01P	7/8/2003	Naphthalene	ND		mg/kg	0.014	EPA 8310
ACSP2S01P	7/8/2003	Phenanthrene	0.036	U	mg/kg	0.0015	EPA 8310

APPENDIX E
SOIL ANALYTICAL RESULTS
Remedial Investigation Report
Arkansas City MGP Site

Sample Location	Date	Parameter	conc		Units	Reporting Limit[(1)]	Method
ACSP2S01PDL	7/8/2003	Pyrene	0.090		mg/kg	0.0060	EPA 8310
ACSP2S02P	7/8/2003	Benzene	ND		mg/kg	0.058	EPA 8260
ACSP2S02P	7/8/2003	Ethylbenzene	ND		mg/kg	0.058	EPA 8260
ACSP2S02P	7/8/2003	Toluene	ND		mg/kg	0.058	EPA 8260
ACSP2S02P	7/8/2003	Xylenes	ND		mg/kg	0.17	EPA 8260
ACSP2S02P	7/8/2003	Acenaphthene	ND		mg/kg	0.0052	EPA 8310
ACSP2S02P	7/8/2003	Acenaphthylene	ND		mg/kg	0.010	EPA 8310
ACSP2S02P	7/8/2003	Anthracene	ND		mg/kg	0.00093	EPA 8310
ACSP2S02P	7/8/2003	Benzo(a)anthracene	ND		mg/kg	0.0014	EPA 8310
ACSP2S02P	7/8/2003	Benzo(a)pyrene	ND		mg/kg	0.0019	EPA 8310
ACSP2S02P	7/8/2003	Benzo(b)fluoranthene	ND		mg/kg	0.0010	EPA 8310
ACSP2S02P	7/8/2003	Benzo(g,h,i)perylene	ND		mg/kg	0.0035	EPA 8310
ACSP2S02P	7/8/2003	Benzo(k)fluoranthene	ND		mg/kg	0.00093	EPA 8310
ACSP2S02P	7/8/2003	Chrysene	ND		mg/kg	0.0010	EPA 8310
ACSP2S02P	7/8/2003	Dibenzo(a,h)anthracene	ND		mg/kg	0.0030	EPA 8310
ACSP2S02P	7/8/2003	Fluoranthene	ND		mg/kg	0.0024	EPA 8310
ACSP2S02P	7/8/2003	Fluorene	ND		mg/kg	0.0049	EPA 8310
ACSP2S02P	7/8/2003	Indeno(1,2,3-cd)pyrene	ND	U J	mg/kg	0.0013	EPA 8310
ACSP2S02P	7/8/2003	Naphthalene	ND		mg/kg	0.015	EPA 8310
ACSP2S02P	7/8/2003	Phenanthrene	0.0093	U	mg/kg	0.0016	EPA 8310
ACSP2S02P	7/8/2003	Pyrene	ND		mg/kg	0.0013	EPA 8310
ACSP3S01P	7/8/2003	Benzene	ND		mg/kg	0.055	EPA 8260
ACSP3S01P	7/8/2003	Ethylbenzene	ND		mg/kg	0.055	EPA 8260
ACSP3S01P	7/8/2003	Toluene	ND		mg/kg	0.055	EPA 8260
ACSP3S01P	7/8/2003	Xylenes	ND		mg/kg	0.17	EPA 8260
ACSP3S01P	7/8/2003	Acenaphthene	ND		mg/kg	0.0050	EPA 8310
ACSP3S01P	7/8/2003	Acenaphthylene	ND		mg/kg	0.0098	EPA 8310
ACSP3S01P	7/8/2003	Anthracene	ND		mg/kg	0.00088	EPA 8310
ACSP3S01P	7/8/2003	Benzo(a)anthracene	ND		mg/kg	0.0013	EPA 8310
ACSP3S01P	7/8/2003	Benzo(a)pyrene	ND		mg/kg	0.0018	EPA 8310
ACSP3S01P	7/8/2003	Benzo(b)fluoranthene	ND		mg/kg	0.00099	EPA 8310
ACSP3S01P	7/8/2003	Benzo(g,h,i)perylene	ND		mg/kg	0.0033	EPA 8310
ACSP3S01P	7/8/2003	Benzo(k)fluoranthene	ND		mg/kg	0.00088	EPA 8310
ACSP3S01P	7/8/2003	Chrysene	ND		mg/kg	0.00099	EPA 8310
ACSP3S01P	7/8/2003	Dibenzo(a,h)anthracene	ND		mg/kg	0.0029	EPA 8310
ACSP3S01P	7/8/2003	Fluoranthene	ND		mg/kg	0.0023	EPA 8310
ACSP3S01P	7/8/2003	Fluorene	ND		mg/kg	0.0046	EPA 8310
ACSP3S01P	7/8/2003	Indeno(1,2,3-cd)pyrene	ND		mg/kg	0.0012	EPA 8310
ACSP3S01P	7/8/2003	Naphthalene	ND		mg/kg	0.014	EPA 8310
ACSP3S01P	7/8/2003	Phenanthrene	ND		mg/kg	0.0015	EPA 8310
ACSP3S01P	7/8/2003	Pyrene	ND		mg/kg	0.0012	EPA 8310
ACSP3S02P	7/8/2003	Benzene	ND		mg/kg	0.058	EPA 8260
ACSP3S02P	7/8/2003	Ethylbenzene	ND		mg/kg	0.058	EPA 8260
ACSP3S02P	7/8/2003	Toluene	ND		mg/kg	0.058	EPA 8260
ACSP3S02P	7/8/2003	Xylenes	ND		mg/kg	0.17	EPA 8260
ACSP3S02P	7/8/2003	Acenaphthene	ND		mg/kg	0.0053	EPA 8310

APPENDIX E
SOIL ANALYTICAL RESULTS
Remedial Investigation Report
Arkansas City MGP Site

Sample Location	Date	Parameter	conc		Units	Reporting Limit[1]	Method
ACSP3S02P	7/8/2003	Acenaphthylene	ND		mg/kg	0.010	EPA 8310
ACSP3S02P	7/8/2003	Anthracene	ND		mg/kg	0.00094	EPA 8310
ACSP3S02P	7/8/2003	Benzo(a)anthracene	ND		mg/kg	0.0014	EPA 8310
ACSP3S02P	7/8/2003	Benzo(a)pyrene	ND		mg/kg	0.0019	EPA 8310
ACSP3S02P	7/8/2003	Benzo(b)fluoranthene	ND		mg/kg	0.0011	EPA 8310
ACSP3S02P	7/8/2003	Benzo(g,h,i)perylene	ND		mg/kg	0.0035	EPA 8310
ACSP3S02P	7/8/2003	Benzo(k)fluoranthene	ND		mg/kg	0.00094	EPA 8310
ACSP3S02P	7/8/2003	Chrysene	ND		mg/kg	0.0011	EPA 8310
ACSP3S02P	7/8/2003	Dibenzo(a,h)anthracene	ND	U J	mg/kg	0.0030	EPA 8310
ACSP3S02P	7/8/2003	Fluoranthene	ND		mg/kg	0.0025	EPA 8310
ACSP3S02P	7/8/2003	Fluorene	ND		mg/kg	0.0049	EPA 8310
ACSP3S02P	7/8/2003	Indeno(1,2,3-cd)pyrene	ND		mg/kg	0.0013	EPA 8310
ACSP3S02P	7/8/2003	Naphthalene	ND		mg/kg	0.015	EPA 8310
ACSP3S02P	7/8/2003	Phenanthrene	0.0070	U	mg/kg	0.0058	EPA 8310
ACSP3S02P	7/8/2003	Pyrene	ND		mg/kg	0.0013	EPA 8310
ACSP4S01P	7/9/2003	Benzene	ND	U J	mg/kg	0.056	EPA 8260
ACSP4S01P	7/9/2003	Ethylbenzene	ND	U J	mg/kg	0.056	EPA 8260
ACSP4S01P	7/9/2003	Toluene	ND	U J	mg/kg	0.056	EPA 8260
ACSP4S01P	7/9/2003	Xylenes	ND		mg/kg	0.17	EPA 8260
ACSP4S01P	7/9/2003	Acenaphthene	ND		mg/kg	0.0051	EPA 8310
ACSP4S01P	7/9/2003	Acenaphthylene	ND		mg/kg	0.010	EPA 8310
ACSP4S01P	7/9/2003	Anthracene	ND		mg/kg	0.00091	EPA 8310
ACSP4S01P	7/9/2003	Benzo(a)anthracene	ND		mg/kg	0.0014	EPA 8310
ACSP4S01P	7/9/2003	Benzo(a)pyrene	ND		mg/kg	0.0018	EPA 8310
ACSP4S01P	7/9/2003	Benzo(b)fluoranthene	ND		mg/kg	0.0010	EPA 8310
ACSP4S01P	7/9/2003	Benzo(g,h,i)perylene	ND		mg/kg	0.0034	EPA 8310
ACSP4S01P	7/9/2003	Benzo(k)fluoranthene	ND		mg/kg	0.00091	EPA 8310
ACSP4S01P	7/9/2003	Chrysene	ND		mg/kg	0.0010	EPA 8310
ACSP4S01P	7/9/2003	Dibenzo(a,h)anthracene	ND		mg/kg	0.0029	EPA 8310
ACSP4S01P	7/9/2003	Fluoranthene	ND		mg/kg	0.0024	EPA 8310
ACSP4S01P	7/9/2003	Fluorene	ND		mg/kg	0.0048	EPA 8310
ACSP4S01P	7/9/2003	Indeno(1,2,3-cd)pyrene	ND		mg/kg	0.0012	EPA 8310
ACSP4S01P	7/9/2003	Naphthalene	ND		mg/kg	0.015	EPA 8310
ACSP4S01P	7/9/2003	Phenanthrene	0.0073	U	mg/kg	0.0057	EPA 8310
ACSP4S01P	7/9/2003	Pyrene	ND		mg/kg	0.0012	EPA 8310
ACSP4S02P	7/9/2003	Benzene	ND	U J	mg/kg	0.062	EPA 8260
ACSP4S02P	7/9/2003	Ethylbenzene	ND	U J	mg/kg	0.062	EPA 8260
ACSP4S02P	7/9/2003	Toluene	ND	U J	mg/kg	0.062	EPA 8260
ACSP4S02P	7/9/2003	Xylenes	ND		mg/kg	0.18	EPA 8260
ACSP4S02P	7/9/2003	Acenaphthene	ND		mg/kg	0.0056	EPA 8310
ACSP4S02P	7/9/2003	Acenaphthylene	ND		mg/kg	0.011	EPA 8310
ACSP4S02P	7/9/2003	Anthracene	ND		mg/kg	0.00099	EPA 8310
ACSP4S02P	7/9/2003	Benzo(a)anthracene	ND		mg/kg	0.0015	EPA 8310
ACSP4S02P	7/9/2003	Benzo(a)pyrene	ND		mg/kg	0.0020	EPA 8310
ACSP4S02P	7/9/2003	Benzo(b)fluoranthene	ND		mg/kg	0.0011	EPA 8310
ACSP4S02P	7/9/2003	Benzo(g,h,i)perylene	ND		mg/kg	0.0037	EPA 8310

APPENDIX E
SOIL ANALYTICAL RESULTS
Remedial Investigation Report
Arkansas City MGP Site

Sample Location	Date	Parameter	conc			Units	Reporting Limit[1]	Method
ACSP4S02P	7/9/2003	Benzo(k)fluoranthene	ND			mg/kg	0.00099	EPA 8310
ACSP4S02P	7/9/2003	Chrysene	ND			mg/kg	0.0011	EPA 8310
ACSP4S02P	7/9/2003	Dibenzo(a,h)anthracene	ND			mg/kg	0.0032	EPA 8310
ACSP4S02P	7/9/2003	Fluoranthene	ND			mg/kg	0.0026	EPA 8310
ACSP4S02P	7/9/2003	Fluorene	ND			mg/kg	0.0052	EPA 8310
ACSP4S02P	7/9/2003	Indeno(1,2,3-cd)pyrene	ND			mg/kg	0.0014	EPA 8310
ACSP4S02P	7/9/2003	Naphthalene	ND			mg/kg	0.016	EPA 8310
ACSP4S02P	7/9/2003	Phenanthrene	0.0074		U	mg/kg	0.0062	EPA 8310
ACSP4S02P	7/9/2003	Pyrene	ND			mg/kg	0.0014	EPA 8310
ACSP5S01P	7/7/2003	Cyanide	0.945			mg/kg	0.0558	EPA 335.3
ACSP5S01P	7/7/2003	Arsenic	11		J	mg/kg	0.979	EPA 6010
ACSP5S01P	7/7/2003	Barium	58.2		J	mg/kg	0.979	EPA 6010
ACSP5S01P	7/7/2003	Cadmium	ND	U	J	mg/kg	0.979	EPA 6010
ACSP5S01P	7/7/2003	Chromium	11.2		J	mg/kg	0.49	EPA 6010
ACSP5S01P	7/7/2003	Lead	11.3		J	mg/kg	0.49	EPA 6010
ACSP5S01P	7/7/2003	Selenium	34.7		J	mg/kg	1.47	EPA 6010
ACSP5S01P	7/7/2003	Silver	ND			mg/kg	0.685	EPA 6010
ACSP5S01P	7/7/2003	Mercury	ND	U	J	mg/kg	0.156	EPA 7471
ACSP5S01P	7/7/2003	Benzene	ND	U	J	mg/kg	0.056	EPA 8260
ACSP5S01P	7/7/2003	Ethylbenzene	ND	U	J	mg/kg	0.056	EPA 8260
ACSP5S01P	7/7/2003	Toluene	ND	U	J	mg/kg	0.056	EPA 8260
ACSP5S01P	7/7/2003	Xylenes	ND			mg/kg	0.17	EPA 8260
ACSP5S01P	7/7/2003	Acenaphthene	ND			mg/kg	0.0050	EPA 8310
ACSP5S01P	7/7/2003	Acenaphthylene	ND			mg/kg	0.0099	EPA 8310
ACSP5S01P	7/7/2003	Anthracene	ND			mg/kg	0.00089	EPA 8310
ACSP5S01P	7/7/2003	Benzo(a)anthracene	0.0086			mg/kg	0.0013	EPA 8310
ACSP5S01P	7/7/2003	Benzo(a)pyrene	0.015			mg/kg	0.0018	EPA 8310
ACSP5S01P	7/7/2003	Benzo(b)fluoranthene	0.013			mg/kg	0.0010	EPA 8310
ACSP5S01P	7/7/2003	Benzo(g,h,i)perylene	ND			mg/kg	0.0033	EPA 8310
ACSP5S01P	7/7/2003	Benzo(k)fluoranthene	0.0065			mg/kg	0.00089	EPA 8310
ACSP5S01P	7/7/2003	Chrysene	0.011			mg/kg	0.0010	EPA 8310
ACSP5S01P	7/7/2003	Dibenzo(a,h)anthracene	ND			mg/kg	0.0029	EPA 8310
ACSP5S01P	7/7/2003	Fluoranthene	0.016			mg/kg	0.0023	EPA 8310
ACSP5S01P	7/7/2003	Fluorene	ND			mg/kg	0.0047	EPA 8310
ACSP5S01P	7/7/2003	Indeno(1,2,3-cd)pyrene	0.023			mg/kg	0.0012	EPA 8310
ACSP5S01P	7/7/2003	Naphthalene	ND			mg/kg	0.015	EPA 8310
ACSP5S01P	7/7/2003	Phenanthrene	0.0067			mg/kg	0.0016	EPA 8310
ACSP5S01P	7/7/2003	Pyrene	0.013			mg/kg	0.0012	EPA 8310
ACSP5S02P	7/7/2003	Cyanide	0.198			mg/kg	0.0566	EPA 335.3
ACSP5S02P	7/7/2003	Arsenic	1.44		J	mg/kg	1.03	EPA 6010
ACSP5S02P	7/7/2003	Barium	69.2		J	mg/kg	1.03	EPA 6010
ACSP5S02P	7/7/2003	Cadmium	ND	U	J	mg/kg	0.515	EPA 6010
ACSP5S02P	7/7/2003	Chromium	7.99		J	mg/kg	0.515	EPA 6010
ACSP5S02P	7/7/2003	Lead	12.7		J	mg/kg	0.515	EPA 6010
ACSP5S02P	7/7/2003	Selenium	7.24		J	mg/kg	1.54	EPA 6010
ACSP5S02P	7/7/2003	Silver	ND			mg/kg	0.72	EPA 6010

APPENDIX E
SOIL ANALYTICAL RESULTS
Remedial Investigation Report
Arkansas City MGP Site

Sample Location	Date	Parameter	conc		Units	Reporting Limit[1]	Method
ACSP5S02P	7/7/2003	Mercury	ND	U J	mg/kg	0.152	EPA 7471
ACSP5S02P	7/7/2003	Benzene	ND	U J	mg/kg	0.056	EPA 8260
ACSP5S02P	7/7/2003	Ethylbenzene	ND	U J	mg/kg	0.056	EPA 8260
ACSP5S02P	7/7/2003	Toluene	ND	U J	mg/kg	0.056	EPA 8260
ACSP5S02P	7/7/2003	Xylenes	ND		mg/kg	0.17	EPA 8260
ACSP5S02P	7/7/2003	Acenaphthene	ND		mg/kg	0.0051	EPA 8310
ACSP5S02P	7/7/2003	Acenaphthylene	ND		mg/kg	0.010	EPA 8310
ACSP5S02P	7/7/2003	Anthracene	ND		mg/kg	0.00091	EPA 8310
ACSP5S02P	7/7/2003	Benzo(a)anthracene	0.0095		mg/kg	0.0014	EPA 8310
ACSP5S02P	7/7/2003	Benzo(a)pyrene	0.015		mg/kg	0.0018	EPA 8310
ACSP5S02P	7/7/2003	Benzo(b)fluoranthene	0.010		mg/kg	0.0010	EPA 8310
ACSP5S02P	7/7/2003	Benzo(g,h,i)perylene	ND		mg/kg	0.0034	EPA 8310
ACSP5S02P	7/7/2003	Benzo(k)fluoranthene	0.0056		mg/kg	0.00091	EPA 8310
ACSP5S02P	7/7/2003	Chrysene	0.011		mg/kg	0.0010	EPA 8310
ACSP5S02P	7/7/2003	Dibenzo(a,h)anthracene	ND		mg/kg	0.0029	EPA 8310
ACSP5S02P	7/7/2003	Fluoranthene	0.014		mg/kg	0.0024	EPA 8310
ACSP5S02P	7/7/2003	Fluorene	ND		mg/kg	0.0048	EPA 8310
ACSP5S02P	7/7/2003	Indeno(1,2,3-cd)pyrene	0.015		mg/kg	0.0012	EPA 8310
ACSP5S02P	7/7/2003	Naphthalene	ND		mg/kg	0.015	EPA 8310
ACSP5S02P	7/7/2003	Phenanthrene	0.0087		mg/kg	0.0016	EPA 8310
ACSP5S02P	7/7/2003	Pyrene	0.014		mg/kg	0.0012	EPA 8310
ACSP6S01P	7/8/2003	Ignitability			f		EPA 1010
ACSP6S01P	7/8/2003	Acenaphthene	ND		mg/kg	2.7	EPA 8310
ACSP6S01P	7/8/2003	Acenaphthylene	ND		mg/kg	5.3	EPA 8310
ACSP6S01P	7/8/2003	Anthracene	3.1		mg/kg	0.47	EPA 8310
ACSP6S01P	7/8/2003	Benzo(a)anthracene	7.1		mg/kg	0.71	EPA 8310
ACSP6S01P	7/8/2003	Benzo(a)pyrene	6.8		mg/kg	0.95	EPA 8310
ACSP6S01P	7/8/2003	Benzo(b)fluoranthene	5.7		mg/kg	0.53	EPA 8310
ACSP6S01P	7/8/2003	Benzo(g,h,i)perylene	5.2	J	mg/kg	1.8	EPA 8310
ACSP6S01P	7/8/2003	Benzo(k)fluoranthene	3.5		mg/kg	0.47	EPA 8310
ACSP6S01P	7/8/2003	Chrysene	6.3		mg/kg	0.53	EPA 8310
ACSP6S01P	7/8/2003	Dibenzo(a,h)anthracene	6.2		mg/kg	1.5	EPA 8310
ACSP6S01P	7/8/2003	Fluoranthene	14		mg/kg	1.2	EPA 8310
ACSP6S01P	7/8/2003	Fluorene	ND		mg/kg	2.5	EPA 8310
ACSP6S01P	7/8/2003	Indeno(1,2,3-cd)pyrene	ND		mg/kg	0.65	EPA 8310
ACSP6S01P	7/8/2003	Naphthalene	ND	U J	mg/kg	7.7	EPA 8310
ACSP6S01P	7/8/2003	Phenanthrene	8.1	U	mg/kg	3	EPA 8310
ACSP6S01P	7/8/2003	Pyrene	9.5		mg/kg	0.65	EPA 8310
ACSP6S01P	7/8/2003	Corrosivity (pH Solid)	8.45				EPA 9045
ACSP6S01P	7/8/2003	Reactive Sulfide	ND		mg/kg	11.8	SW-846 7.3
ACSP6S01P	7/8/2003	Reactivity, Cyanide	ND		mg/kg	0.592	SW-846 7.3
ACSP6S02P	7/8/2003	Ignitability			f		EPA 1010
ACSP6S02P	7/8/2003	Acenaphthene	ND		mg/kg	17	EPA 8310
ACSP6S02P	7/8/2003	Acenaphthylene	ND		mg/kg	34	EPA 8310
ACSP6S02P	7/8/2003	Anthracene	870		mg/kg	31	EPA 8310
ACSP6S02P	7/8/2003	Benzo(a)anthracene	410		mg/kg	46	EPA 8310

APPENDIX E
SOIL ANALYTICAL RESULTS
Remedial Investigation Report
Arkansas City MGP Site

Sample Location	Date	Parameter	conc		Units	Reporting Limit[1]	Method
ACSP6S02P	7/8/2003	Benzo(a)pyrene	290		mg/kg	61	EPA 8310
ACSP6S02P	7/8/2003	Benzo(b)fluoranthene	240		mg/kg	35	EPA 8310
ACSP6S02P	7/8/2003	Benzo(g,h,i)perylene	ND		mg/kg	12	EPA 8310
ACSP6S02P	7/8/2003	Benzo(k)fluoranthene	140		mg/kg	31	EPA 8310
ACSP6S02P	7/8/2003	Chrysene	320		mg/kg	35	EPA 8310
ACSP6S02P	7/8/2003	Dibenzo(a,h)anthracene	210	J	mg/kg	10	EPA 8310
ACSP6S02P	7/8/2003	Fluoranthene	1100		mg/kg	81	EPA 8310
ACSP6S02P	7/8/2003	Fluorene	740		mg/kg	16	EPA 8310
ACSP6S02P	7/8/2003	Indeno(1,2,3-cd)pyrene	ND		mg/kg	42	EPA 8310
ACSP6S02P	7/8/2003	Naphthalene	4800		mg/kg	50	EPA 8310
ACSP6S02P	7/8/2003	Phenanthrene	2300		mg/kg	27	EPA 8310
ACSP6S02P	7/8/2003	Pyrene	890		mg/kg	42	EPA 8310
ACSP6S02P	7/8/2003	Corrosivity (pH Solid)	8.68				EPA 9045
ACSP6S02P	7/8/2003	Reactive Sulfide	ND		mg/kg	13	SW-846 7.3
ACSP6S02P	7/8/2003	Reactivity, Cyanide	ND		mg/kg	0.652	SW-846 7.3
ACSP7S01D	7/8/2003	Cyanide	0.0821		mg/kg	0.0545	EPA 335.3
ACSP7S01D	7/8/2003	Benzene	ND		mg/kg	0.054	EPA 8260
ACSP7S01D	7/8/2003	Ethylbenzene	ND		mg/kg	0.054	EPA 8260
ACSP7S01D	7/8/2003	Toluene	ND		mg/kg	0.054	EPA 8260
ACSP7S01D	7/8/2003	Xylenes	ND		mg/kg	0.16	EPA 8260
ACSP7S01D	7/8/2003	Acenaphthene	ND		mg/kg	0.0049	EPA 8310
ACSP7S01D	7/8/2003	Anthracene	ND		mg/kg	0.00087	EPA 8310
ACSP7S01D	7/8/2003	Benzo(a)anthracene	ND		mg/kg	0.0013	EPA 8310
ACSP7S01D	7/8/2003	Benzo(a)pyrene	ND		mg/kg	0.0017	EPA 8310
ACSP7S01D	7/8/2003	Benzo(b)fluoranthene	ND		mg/kg	0.00098	EPA 8310
ACSP7S01D	7/8/2003	Benzo(g,h,i)perylene	ND		mg/kg	0.0033	EPA 8310
ACSP7S01D	7/8/2003	Benzo(k)fluoranthene	ND		mg/kg	0.00087	EPA 8310
ACSP7S01D	7/8/2003	Chrysene	ND		mg/kg	0.00098	EPA 8310
ACSP7S01D	7/8/2003	Dibenzo(a,h)anthracene	ND	U J	mg/kg	0.0028	EPA 8310
ACSP7S01D	7/8/2003	Fluoranthene	ND		mg/kg	0.0023	EPA 8310
ACSP7S01D	7/8/2003	Fluorene	ND		mg/kg	0.0046	EPA 8310
ACSP7S01D	7/8/2003	Indeno(1,2,3-cd)pyrene	ND		mg/kg	0.0012	EPA 8310
ACSP7S01D	7/8/2003	Naphthalene	ND		mg/kg	0.014	EPA 8310
ACSP7S01D	7/8/2003	Phenanthrene	0.0091	U	mg/kg	0.0054	EPA 8310
ACSP7S01D	7/8/2003	Pyrene	ND		mg/kg	0.0012	EPA 8310
ACSP7S01P	7/8/2003	Cyanide	0.166		mg/kg	0.0549	EPA 335.3
ACSP7S01P	7/8/2003	Benzene	ND		mg/kg	0.055	EPA 8260
ACSP7S01P	7/8/2003	Ethylbenzene	ND		mg/kg	0.055	EPA 8260
ACSP7S01P	7/8/2003	Toluene	ND		mg/kg	0.055	EPA 8260
ACSP7S01P	7/8/2003	Xylenes	ND		mg/kg	0.16	EPA 8260
ACSP7S01P	7/8/2003	Acenaphthene	ND		mg/kg	0.0049	EPA 8310
ACSP7S01P	7/8/2003	Acenaphthylene	ND		mg/kg	0.0097	EPA 8310
ACSP7S01P	7/8/2003	Anthracene	ND		mg/kg	0.00088	EPA 8310
ACSP7S01P	7/8/2003	Benzo(a)anthracene	ND		mg/kg	0.0013	EPA 8310
ACSP7S01P	7/8/2003	Benzo(a)pyrene	ND		mg/kg	0.0018	EPA 8310
ACSP7S01P	7/8/2003	Benzo(b)fluoranthene	0.0042		mg/kg	0.00098	EPA 8310

APPENDIX E
SOIL ANALYTICAL RESULTS
Remedial Investigation Report
Arkansas City MGP Site

Sample Location	Date	Parameter	conc		Units	Reporting Limit[1]	Method
ACSP7S01P	7/8/2003	Benzo(g,h,i)perylene	ND		mg/kg	0.0033	EPA 8310
ACSP7S01P	7/8/2003	Benzo(k)fluoranthene	ND		mg/kg	0.00088	EPA 8310
ACSP7S01P	7/8/2003	Chrysene	ND		mg/kg	0.00098	EPA 8310
ACSP7S01P	7/8/2003	Dibenzo(a,h)anthracene	ND		mg/kg	0.0028	EPA 8310
ACSP7S01P	7/8/2003	Fluoranthene	ND		mg/kg	0.0023	EPA 8310
ACSP7S01P	7/8/2003	Fluorene	ND		mg/kg	0.0046	EPA 8310
ACSP7S01P	7/8/2003	Indeno(1,2,3-cd)pyrene	ND		mg/kg	0.0012	EPA 8310
ACSP7S01P	7/8/2003	Naphthalene	ND	U J	mg/kg	0.014	EPA 8310
ACSP7S01P	7/8/2003	Phenanthrene	0.011	U	mg/kg	0.0015	EPA 8310
ACSP7S01P	7/8/2003	Pyrene	0.0062		mg/kg	0.0012	EPA 8310
ACSP7S02P	7/8/2003	Cyanide	0.499		mg/kg	0.0579	EPA 335.3
ACSP7S02P	7/8/2003	Benzene	ND		mg/kg	0.058	EPA 8260
ACSP7S02P	7/8/2003	Ethylbenzene	ND		mg/kg	0.058	EPA 8260
ACSP7S02P	7/8/2003	Toluene	ND		mg/kg	0.058	EPA 8260
ACSP7S02P	7/8/2003	Xylenes	ND		mg/kg	0.17	EPA 8260
ACSP7S02P	7/8/2003	Acenaphthene	ND		mg/kg	0.0052	EPA 8310
ACSP7S02P	7/8/2003	Acenaphthylene	ND		mg/kg	0.010	EPA 8310
ACSP7S02P	7/8/2003	Anthracene	ND		mg/kg	0.00092	EPA 8310
ACSP7S02P	7/8/2003	Benzo(a)anthracene	ND		mg/kg	0.0014	EPA 8310
ACSP7S02P	7/8/2003	Benzo(a)pyrene	ND		mg/kg	0.0018	EPA 8310
ACSP7S02P	7/8/2003	Benzo(b)fluoranthene	ND		mg/kg	0.0010	EPA 8310
ACSP7S02P	7/8/2003	Benzo(g,h,i)perylene	ND		mg/kg	0.0035	EPA 8310
ACSP7S02P	7/8/2003	Benzo(k)fluoranthene	ND		mg/kg	0.00092	EPA 8310
ACSP7S02P	7/8/2003	Chrysene	ND		mg/kg	0.0010	EPA 8310
ACSP7S02P	7/8/2003	Dibenzo(a,h)anthracene	ND		mg/kg	0.0030	EPA 8310
ACSP7S02P	7/8/2003	Fluoranthene	ND		mg/kg	0.0024	EPA 8310
ACSP7S02P	7/8/2003	Fluorene	ND		mg/kg	0.0048	EPA 8310
ACSP7S02P	7/8/2003	Indeno(1,2,3-cd)pyrene	ND		mg/kg	0.0013	EPA 8310
ACSP7S02P	7/8/2003	Naphthalene	ND	U J	mg/kg	0.015	EPA 8310
ACSP7S02P	7/8/2003	Phenanthrene	ND		mg/kg	0.0016	EPA 8310
ACSP7S02P	7/8/2003	Pyrene	ND		mg/kg	0.0013	EPA 8310
ACSP7SS1S01P	7/8/2003	Acenaphthene	ND		mg/kg	0.51	EPA 8310
ACSP7SS1S01P	7/8/2003	Acenaphthylene	ND		mg/kg	1.0	EPA 8310
ACSP7SS1S01P	7/8/2003	Anthracene	6.8		mg/kg	0.90	EPA 8310
ACSP7SS1S01P	7/8/2003	Benzo(a)anthracene	10		mg/kg	1.4	EPA 8310
ACSP7SS1S01P	7/8/2003	Benzo(a)pyrene	6.1		mg/kg	1.8	EPA 8310
ACSP7SS1S01P	7/8/2003	Benzo(b)fluoranthene	5.6		mg/kg	0.10	EPA 8310
ACSP7SS1S01P	7/8/2003	Benzo(g,h,i)perylene	1.6		mg/kg	0.34	EPA 8310
ACSP7SS1S01P	7/8/2003	Benzo(k)fluoranthene	3.4		mg/kg	0.090	EPA 8310
ACSP7SS1S01P	7/8/2003	Chrysene	8.3		mg/kg	1.0	EPA 8310
ACSP7SS1S01P	7/8/2003	Dibenzo(a,h)anthracene	5.7		mg/kg	0.29	EPA 8310
ACSP7SS1S01P	7/8/2003	Fluoranthene	24		mg/kg	2.4	EPA 8310
ACSP7SS1S01P	7/8/2003	Fluorene	2.8		mg/kg	0.47	EPA 8310
ACSP7SS1S01P	7/8/2003	Indeno(1,2,3-cd)pyrene	ND		mg/kg	0.12	EPA 8310
ACSP7SS1S01P	7/8/2003	Naphthalene	ND		mg/kg	1.5	EPA 8310
ACSP7SS1S01P	7/8/2003	Phenanthrene	25	U	mg/kg	5.6	EPA 8310

APPENDIX E
SOIL ANALYTICAL RESULTS
Remedial Investigation Report
Arkansas City MGP Site

Sample Location	Date	Parameter	conc		Units	Reporting Limit[1]	Method
ACSP7SS1S01P	7/8/2003	Pyrene	21		mg/kg	1.2	EPA 8310
ACSP8S01P	7/8/2003	Benzene	ND		mg/kg	0.059	EPA 8260
ACSP8S01P	7/8/2003	Ethylbenzene	ND		mg/kg	0.059	EPA 8260
ACSP8S01P	7/8/2003	Toluene	ND		mg/kg	0.059	EPA 8260
ACSP8S01P	7/8/2003	Xylenes	ND		mg/kg	0.18	EPA 8260
ACSP8S01P	7/8/2003	Acenaphthene	ND		mg/kg	0.053	EPA 8310
ACSP8S01P	7/8/2003	Acenaphthylene	ND		mg/kg	0.11	EPA 8310
ACSP8S01P	7/8/2003	Anthracene	0.024	J	mg/kg	0.0095	EPA 8310
ACSP8S01P	7/8/2003	Benzo(a)anthracene	0.10		mg/kg	0.014	EPA 8310
ACSP8S01P	7/8/2003	Benzo(a)pyrene	0.12		mg/kg	0.019	EPA 8310
ACSP8S01P	7/8/2003	Benzo(b)fluoranthene	0.12		mg/kg	0.011	EPA 8310
ACSP8S01P	7/8/2003	Benzo(g,h,i)perylene	0.16		mg/kg	0.036	EPA 8310
ACSP8S01P	7/8/2003	Benzo(k)fluoranthene	0.062		mg/kg	0.0095	EPA 8310
ACSP8S01P	7/8/2003	Chrysene	0.10		mg/kg	0.011	EPA 8310
ACSP8S01P	7/8/2003	Dibenzo(a,h)anthracene	0.12		mg/kg	0.031	EPA 8310
ACSP8S01P	7/8/2003	Fluoranthene	0.18		mg/kg	0.025	EPA 8310
ACSP8S01P	7/8/2003	Fluorene	ND		mg/kg	0.050	EPA 8310
ACSP8S01P	7/8/2003	Indeno(1,2,3-cd)pyrene	ND	U J	mg/kg	0.013	EPA 8310
ACSP8S01P	7/8/2003	Naphthalene	ND		mg/kg	0.16	EPA 8310
ACSP8S01P	7/8/2003	Phenanthrene	0.085	U	mg/kg	0.059	EPA 8310
ACSP8S01P	7/8/2003	Pyrene	0.15		mg/kg	0.013	EPA 8310
ACSP8S02P	7/8/2003	Benzene	ND		mg/kg	0.059	EPA 8260
ACSP8S02P	7/8/2003	Ethylbenzene	ND		mg/kg	0.059	EPA 8260
ACSP8S02P	7/8/2003	Toluene	ND		mg/kg	0.059	EPA 8260
ACSP8S02P	7/8/2003	Xylenes	ND		mg/kg	0.18	EPA 8260
ACSP8S02P	7/8/2003	Acenaphthene	ND		mg/kg	0.0053	EPA 8310
ACSP8S02P	7/8/2003	Acenaphthylene	ND		mg/kg	0.011	EPA 8310
ACSP8S02P	7/8/2003	Anthracene	ND		mg/kg	0.00094	EPA 8310
ACSP8S02P	7/8/2003	Benzo(a)anthracene	0.0063		mg/kg	0.0014	EPA 8310
ACSP8S02P	7/8/2003	Benzo(a)pyrene	0.0066		mg/kg	0.0019	EPA 8310
ACSP8S02P	7/8/2003	Benzo(b)fluoranthene	0.0074		mg/kg	0.0011	EPA 8310
ACSP8S02P	7/8/2003	Benzo(g,h,i)perylene	ND		mg/kg	0.0035	EPA 8310
ACSP8S02P	7/8/2003	Benzo(k)fluoranthene	ND		mg/kg	0.00094	EPA 8310
ACSP8S02P	7/8/2003	Chrysene	0.0066		mg/kg	0.0011	EPA 8310
ACSP8S02P	7/8/2003	Dibenzo(a,h)anthracene	ND		mg/kg	0.0031	EPA 8310
ACSP8S02P	7/8/2003	Fluoranthene	0.012		mg/kg	0.0025	EPA 8310
ACSP8S02P	7/8/2003	Fluorene	ND		mg/kg	0.0050	EPA 8310
ACSP8S02P	7/8/2003	Indeno(1,2,3-cd)pyrene	ND	U J	mg/kg	0.0013	EPA 8310
ACSP8S02P	7/8/2003	Naphthalene	ND		mg/kg	0.015	EPA 8310
ACSP8S02P	7/8/2003	Phenanthrene	0.019	U	mg/kg	0.0059	EPA 8310
ACSP8S02P	7/8/2003	Pyrene	0.017		mg/kg	0.0013	EPA 8310
ACSP8SS1S01P	7/8/2003	Acenaphthene	ND		mg/kg	0.051	EPA 8310
ACSP8SS1S01P	7/8/2003	Acenaphthylene	ND		mg/kg	0.10	EPA 8310
ACSP8SS1S01P	7/8/2003	Anthracene	0.016	J	mg/kg	0.0090	EPA 8310
ACSP8SS1S01P	7/8/2003	Benzo(a)anthracene	0.069		mg/kg	0.014	EPA 8310
ACSP8SS1S01P	7/8/2003	Benzo(a)pyrene	0.069		mg/kg	0.018	EPA 8310

APPENDIX E
SOIL ANALYTICAL RESULTS
Remedial Investigation Report
Arkansas City MGP Site

Sample Location	Date	Parameter	conc		Units	Reporting Limit[1]	Method
ACSP8SS1S01P	7/8/2003	Benzo(b)fluoranthene	0.074		mg/kg	0.010	EPA 8310
ACSP8SS1S01P	7/8/2003	Benzo(g,h,i)perylene	ND		mg/kg	0.034	EPA 8310
ACSP8SS1S01P	7/8/2003	Benzo(k)fluoranthene	0.032	J	mg/kg	0.0090	EPA 8310
ACSP8SS1S01P	7/8/2003	Chrysene	0.073		mg/kg	0.010	EPA 8310
ACSP8SS1S01P	7/8/2003	Dibenzo(a,h)anthracene	0.13		mg/kg	0.029	EPA 8310
ACSP8SS1S01P	7/8/2003	Fluoranthene	0.11		mg/kg	0.024	EPA 8310
ACSP8SS1S01P	7/8/2003	Fluorene	ND		mg/kg	0.047	EPA 8310
ACSP8SS1S01P	7/8/2003	Indeno(1,2,3-cd)pyrene	0.14		mg/kg	0.012	EPA 8310
ACSP8SS1S01P	7/8/2003	Naphthalene	ND		mg/kg	0.15	EPA 8310
ACSP8SS1S01P	7/8/2003	Phenanthrene	0.088	U	mg/kg	0.056	EPA 8310
ACSP8SS1S01P	7/8/2003	Pyrene	0.12		mg/kg	0.012	EPA 8310
ACSP9S01P	7/8/2003	Arsenic	ND		mg/kg	1.1	EPA 6010
ACSP9S01P	7/8/2003	Barium	72.8	J	mg/kg	1.1	EPA 6010
ACSP9S01P	7/8/2003	Cadmium	ND		mg/kg	0.55	EPA 6010
ACSP9S01P	7/8/2003	Chromium	8.72	J	mg/kg	0.55	EPA 6010
ACSP9S01P	7/8/2003	Lead	25.2	J	mg/kg	0.55	EPA 6010
ACSP9S01P	7/8/2003	Selenium	6.07	J	mg/kg	1.65	EPA 6010
ACSP9S01P	7/8/2003	Silver	ND		mg/kg	0.77	EPA 6010
ACSP9S01P	7/8/2003	Mercury	ND	R	mg/kg	0.162	EPA 7471
ACSP9S01P	7/8/2003	4,4'-DDD	0.0076	J	mg/kg	0.0038	EPA 8081A
ACSP9S01P	7/8/2003	4,4'-DDE	ND		mg/kg	0.0038	EPA 8081A
ACSP9S01P	7/8/2003	4,4'-DDT	ND		mg/kg	0.0038	EPA 8081A
ACSP9S01P	7/8/2003	Aldrin	ND	U J	mg/kg	0.0020	EPA 8081A
ACSP9S01P	7/8/2003	alpha-BHC	ND		mg/kg	0.0020	EPA 8081A
ACSP9S01P	7/8/2003	alpha-Chlordane	ND	U J	mg/kg	0.0020	EPA 8081A
ACSP9S01P	7/8/2003	beta-BHC	ND		mg/kg	0.0020	EPA 8081A
ACSP9S01P	7/8/2003	Chlordane	ND		mg/kg	0.0077	EPA 8081A
ACSP9S01P	7/8/2003	delta-BHC	ND		mg/kg	0.0020	EPA 8081A
ACSP9S01P	7/8/2003	Dieldrin	ND		mg/kg	0.0038	EPA 8081A
ACSP9S01P	7/8/2003	Endosulfan I	ND		mg/kg	0.0020	EPA 8081A
ACSP9S01P	7/8/2003	Endosulfan II	ND		mg/kg	0.0038	EPA 8081A
ACSP9S01P	7/8/2003	Endosulfan sulfate	ND		mg/kg	0.020	EPA 8081A
ACSP9S01P	7/8/2003	Endrin	ND		mg/kg	0.0038	EPA 8081A
ACSP9S01P	7/8/2003	Endrin aldehyde	ND		mg/kg	0.0038	EPA 8081A
ACSP9S01P	7/8/2003	Endrin ketone	0.0069	J	mg/kg	0.0038	EPA 8081A
ACSP9S01P	7/8/2003	gamma-BHC (Lindane)	ND		mg/kg	0.0020	EPA 8081A
ACSP9S01P	7/8/2003	gamma-Chlordane	ND		mg/kg	0.0020	EPA 8081A
ACSP9S01P	7/8/2003	Heptachlor	ND		mg/kg	0.0020	EPA 8081A
ACSP9S01P	7/8/2003	Heptachlor epoxide	ND		mg/kg	0.0020	EPA 8081A
ACSP9S01P	7/8/2003	Methoxychlor	0.023	J	mg/kg	0.020	EPA 8081A
ACSP9S01P	7/8/2003	Toxaphene	ND		mg/kg	0.096	EPA 8081A
ACSP9S01P	7/8/2003	1,1,1,2-Tetrachloroethane	ND	U J	mg/kg	0.0057	EPA 8260
ACSP9S01P	7/8/2003	1,1,1-Trichloroethane	ND	U J	mg/kg	0.0057	EPA 8260
ACSP9S01P	7/8/2003	1,1,2,2-Tetrachloroethane	ND	U J	mg/kg	0.0057	EPA 8260
ACSP9S01P	7/8/2003	1,1,2-Trichloroethane	ND	U J	mg/kg	0.0057	EPA 8260
ACSP9S01P	7/8/2003	1,1-Dichloroethane	ND	U J	mg/kg	0.0057	EPA 8260

APPENDIX E
SOIL ANALYTICAL RESULTS
Remedial Investigation Report
Arkansas City MGP Site

Sample Location	Date	Parameter	conc			Units	Reporting Limit[1]	Method
ACSP9S01P	7/8/2003	1,1-Dichloroethene	ND	U	J	mg/kg	0.0057	EPA 8260
ACSP9S01P	7/8/2003	1,1-Dichloropropene	ND	U	J	mg/kg	0.0057	EPA 8260
ACSP9S01P	7/8/2003	1,2,3-Trichlorobenzene	ND	U	J	mg/kg	0.0057	EPA 8260
ACSP9S01P	7/8/2003	1,2,3-Trichloropropane	ND	U	J	mg/kg	0.0057	EPA 8260
ACSP9S01P	7/8/2003	1,2,4-Trichlorobenzene	ND	U	J	mg/kg	0.0057	EPA 8260
ACSP9S01P	7/8/2003	1,2,4-Trimethylbenzene	ND	U	J	mg/kg	0.0057	EPA 8260
ACSP9S01P	7/8/2003	1,2-Dibromo-3-chloropropane	ND	U	J	mg/kg	0.0057	EPA 8260
ACSP9S01P	7/8/2003	1,2-Dibromoethane (EDB)	ND	U	J	mg/kg	0.0057	EPA 8260
ACSP9S01P	7/8/2003	1,2-Dichlorobenzene	ND	U	J	mg/kg	0.0057	EPA 8260
ACSP9S01P	7/8/2003	1,2-Dichloroethane	ND	U	J	mg/kg	0.0057	EPA 8260
ACSP9S01P	7/8/2003	1,2-Dichloropropane	ND	U	J	mg/kg	0.0057	EPA 8260
ACSP9S01P	7/8/2003	1,3,5-Trimethylbenzene	ND	U	J	mg/kg	0.0057	EPA 8260
ACSP9S01P	7/8/2003	1,3-Dichlorobenzene	ND	U	J	mg/kg	0.0057	EPA 8260
ACSP9S01P	7/8/2003	1,3-Dichloropropane	ND	U	J	mg/kg	0.0057	EPA 8260
ACSP9S01P	7/8/2003	1,4-Dichlorobenzene	ND	U	J	mg/kg	0.0057	EPA 8260
ACSP9S01P	7/8/2003	2,2-Dichloropropane	ND	U	J	mg/kg	0.0057	EPA 8260
ACSP9S01P	7/8/2003	2-Butanone (MEK)	ND	U	J	mg/kg	0.011	EPA 8260
ACSP9S01P	7/8/2003	2-Chloroethylvinyl ether	ND	U	J	mg/kg	0.0057	EPA 8260
ACSP9S01P	7/8/2003	2-Chlorotoluene	ND	U	J	mg/kg	0.0057	EPA 8260
ACSP9S01P	7/8/2003	2-Hexanone	ND	U	J	mg/kg	0.11	EPA 8260
ACSP9S01P	7/8/2003	4-Chlorotoluene	ND	U	J	mg/kg	0.0057	EPA 8260
ACSP9S01P	7/8/2003	4-Methyl-2-pentanone (MIBK)	ND	U	J	mg/kg	0.011	EPA 8260
ACSP9S01P	7/8/2003	Acetone	ND	U	J	mg/kg	0.023	EPA 8260
ACSP9S01P	7/8/2003	Benzene	ND	U	J	mg/kg	0.0057	EPA 8260
ACSP9S01P	7/8/2003	Bromobenzene	ND	U	J	mg/kg	0.0057	EPA 8260
ACSP9S01P	7/8/2003	Bromochloromethane	ND	U	J	mg/kg	0.0057	EPA 8260
ACSP9S01P	7/8/2003	Bromodichloromethane	ND	U	J	mg/kg	0.0057	EPA 8260
ACSP9S01P	7/8/2003	Bromoform	ND	U	J	mg/kg	0.0057	EPA 8260
ACSP9S01P	7/8/2003	Bromomethane	ND	U	J	mg/kg	0.0057	EPA 8260
ACSP9S01P	7/8/2003	Carbon tetrachloride	ND	U	J	mg/kg	0.0057	EPA 8260
ACSP9S01P	7/8/2003	Chlorobenzene	ND	U	J	mg/kg	0.0057	EPA 8260
ACSP9S01P	7/8/2003	Chloroethane	ND	U	J	mg/kg	0.0057	EPA 8260
ACSP9S01P	7/8/2003	Chloroform	ND	U	J	mg/kg	0.0057	EPA 8260
ACSP9S01P	7/8/2003	Chloromethane	ND	U	J	mg/kg	0.0057	EPA 8260
ACSP9S01P	7/8/2003	cis-1,2-Dichloroethene	ND	U	J	mg/kg	0.0057	EPA 8260
ACSP9S01P	7/8/2003	cis-1,3-Dichloropropene	ND	U	J	mg/kg	0.0057	EPA 8260
ACSP9S01P	7/8/2003	Dibromochloromethane	ND	U	J	mg/kg	0.0057	EPA 8260
ACSP9S01P	7/8/2003	Dibromomethane	ND	U	J	mg/kg	0.0057	EPA 8260
ACSP9S01P	7/8/2003	Dichlorodifluoromethane	ND	U	J	mg/kg	0.0057	EPA 8260
ACSP9S01P	7/8/2003	Ethylbenzene	ND	U	J	mg/kg	0.0057	EPA 8260
ACSP9S01P	7/8/2003	Hexachloro-1,3-butadiene	ND	U	J	mg/kg	0.0057	EPA 8260
ACSP9S01P	7/8/2003	Isopropylbenzene	ND	U	J	mg/kg	0.0057	EPA 8260
ACSP9S01P	7/8/2003	m/p-xylene	ND	U	J	mg/kg	0.0057	EPA 8260
ACSP9S01P	7/8/2003	Methyl tert-butyl ether	ND	U	J	mg/kg	0.0057	EPA 8260
ACSP9S01P	7/8/2003	Methylene chloride	ND	U	J	mg/kg	0.0057	EPA 8260
ACSP9S01P	7/8/2003	Naphthalene	ND	U	J	mg/kg	0.011	EPA 8260

APPENDIX E
SOIL ANALYTICAL RESULTS
Remedial Investigation Report
Arkansas City MGP Site

Sample Location	Date	Parameter	conc		Units	Reporting Limit[1]	Method
ACSP9S01P	7/8/2003	n-Butylbenzene	ND	U J	mg/kg	0.0057	EPA 8260
ACSP9S01P	7/8/2003	n-Propylbenzene	ND	U J	mg/kg	0.0057	EPA 8260
ACSP9S01P	7/8/2003	o-Xylene	ND	U J	mg/kg	0.0057	EPA 8260
ACSP9S01P	7/8/2003	p-Isopropyltoluene	ND	U J	mg/kg	0.0057	EPA 8260
ACSP9S01P	7/8/2003	sec-Butylbenzene	ND	U J	mg/kg	0.0057	EPA 8260
ACSP9S01P	7/8/2003	Styrene	ND	U J	mg/kg	0.0057	EPA 8260
ACSP9S01P	7/8/2003	tert-Butylbenzene	ND	U J	mg/kg	0.0057	EPA 8260
ACSP9S01P	7/8/2003	Tetrachloroethene	ND	U J	mg/kg	0.0057	EPA 8260
ACSP9S01P	7/8/2003	Toluene	ND	U J	mg/kg	0.0057	EPA 8260
ACSP9S01P	7/8/2003	trans-1,2-Dichloroethene	ND	U J	mg/kg	0.0057	EPA 8260
ACSP9S01P	7/8/2003	trans-1,3-Dichloropropene	ND	U J	mg/kg	0.0057	EPA 8260
ACSP9S01P	7/8/2003	Trichloroethene	ND	U J	mg/kg	0.0057	EPA 8260
ACSP9S01P	7/8/2003	Trichlorofluoromethane	ND	U J	mg/kg	0.0057	EPA 8260
ACSP9S01P	7/8/2003	Vinyl chloride	ND	U J	mg/kg	0.0057	EPA 8260
ACSP9S01P	7/8/2003	1,2,4-Trichlorobenzene	ND		mg/kg	0.38	EPA 8270
ACSP9S01P	7/8/2003	1,2-Dichlorobenzene	ND		mg/kg	0.38	EPA 8270
ACSP9S01P	7/8/2003	1,3-Dichlorobenzene	ND		mg/kg	0.38	EPA 8270
ACSP9S01P	7/8/2003	1,4-Dichlorobenzene	ND		mg/kg	0.38	EPA 8270
ACSP9S01P	7/8/2003	1-Bromo-4-phenoxybenzene	ND		mg/kg	0.38	EPA 8270
ACSP9S01P	7/8/2003	2,4,5-Trichlorophenol	ND		mg/kg	0.38	EPA 8270
ACSP9S01P	7/8/2003	2,4,6-Trichlorophenol	ND		mg/kg	0.38	EPA 8270
ACSP9S01P	7/8/2003	2,4-Dichlorophenol	ND		mg/kg	0.38	EPA 8270
ACSP9S01P	7/8/2003	2,4-Dimethylphenol	ND		mg/kg	0.38	EPA 8270
ACSP9S01P	7/8/2003	2,4-Dinitrophenol	ND		mg/kg	1.8	EPA 8270
ACSP9S01P	7/8/2003	2,4-Dinitrotoluene	ND		mg/kg	0.38	EPA 8270
ACSP9S01P	7/8/2003	2,6-Dinitrotoluene	ND		mg/kg	0.38	EPA 8270
ACSP9S01P	7/8/2003	2-Chloronaphthalene	ND		mg/kg	0.38	EPA 8270
ACSP9S01P	7/8/2003	2-Chlorophenol	ND		mg/kg	0.38	EPA 8270
ACSP9S01P	7/8/2003	2-Methylnaphthalene	ND		mg/kg	0.38	EPA 8270
ACSP9S01P	7/8/2003	2-Methylphenol (o-cresol)	ND		mg/kg	0.38	EPA 8270
ACSP9S01P	7/8/2003	2-Nitroaniline	ND		mg/kg	1.8	EPA 8270
ACSP9S01P	7/8/2003	2-Nitrophenol	ND		mg/kg	0.38	EPA 8270
ACSP9S01P	7/8/2003	3,3'-Dichlorobenzidine	ND	U J	mg/kg	0.76	EPA 8270
ACSP9S01P	7/8/2003	3-Nitroaniline	ND		mg/kg	1.8	EPA 8270
ACSP9S01P	7/8/2003	4,6-Dinitro-2-methylphenol	ND		mg/kg	1.8	EPA 8270
ACSP9S01P	7/8/2003	4-Chloro-3-methylphenol	ND		mg/kg	0.76	EPA 8270
ACSP9S01P	7/8/2003	4-Chloroaniline	ND		mg/kg	0.76	EPA 8270
ACSP9S01P	7/8/2003	4-Chlorophenylphenyl ether	ND		mg/kg	0.38	EPA 8270
ACSP9S01P	7/8/2003	4-Methylphenol	ND		mg/kg	0.38	EPA 8270
ACSP9S01P	7/8/2003	4-Nitroaniline	ND	U J	mg/kg	1.8	EPA 8270
ACSP9S01P	7/8/2003	4-Nitrophenol	ND		mg/kg	1.8	EPA 8270
ACSP9S01P	7/8/2003	Acenaphthene	ND		mg/kg	0.38	EPA 8270
ACSP9S01P	7/8/2003	Acenaphthylene	ND		mg/kg	0.38	EPA 8270
ACSP9S01P	7/8/2003	Anthracene	ND		mg/kg	0.38	EPA 8270
ACSP9S01P	7/8/2003	Benzo(a)anthracene	ND		mg/kg	0.38	EPA 8270
ACSP9S01P	7/8/2003	Benzo(a)pyrene	ND		mg/kg	0.38	EPA 8270

APPENDIX E
SOIL ANALYTICAL RESULTS
Remedial Investigation Report
Arkansas City MGP Site

Sample Location	Date	Parameter	conc		Units	Reporting Limit[1]	Method
ACSP9S01P	7/8/2003	Benzo(b)fluoranthene	ND	U J	mg/kg	0.38	EPA 8270
ACSP9S01P	7/8/2003	Benzo(g,h,i)perylene	ND		mg/kg	0.38	EPA 8270
ACSP9S01P	7/8/2003	Benzo(k)fluoranthene	ND	U J	mg/kg	0.38	EPA 8270
ACSP9S01P	7/8/2003	Benzoic acid	ND		mg/kg	1.8	EPA 8270
ACSP9S01P	7/8/2003	Benzyl alcohol	ND		mg/kg	0.76	EPA 8270
ACSP9S01P	7/8/2003	Bis(2-chloroethoxy)methane	ND		mg/kg	0.38	EPA 8270
ACSP9S01P	7/8/2003	bis(2-Chloroethyl) ether	ND		mg/kg	0.38	EPA 8270
ACSP9S01P	7/8/2003	Bis(2-chloroisopropyl) ether	ND		mg/kg	0.38	EPA 8270
ACSP9S01P	7/8/2003	Bis(2-ethylhexyl)phthalate	ND		mg/kg	0.38	EPA 8270
ACSP9S01P	7/8/2003	Butylbenzylphthalate	ND	U J	mg/kg	0.38	EPA 8270
ACSP9S01P	7/8/2003	Chrysene	ND		mg/kg	0.38	EPA 8270
ACSP9S01P	7/8/2003	Dibenzo(a,h)anthracene	ND		mg/kg	0.38	EPA 8270
ACSP9S01P	7/8/2003	Dibenzofuran	ND		mg/kg	0.38	EPA 8270
ACSP9S01P	7/8/2003	Diethylphthalate	ND		mg/kg	0.38	EPA 8270
ACSP9S01P	7/8/2003	Dimethylphthalate	ND		mg/kg	0.38	EPA 8270
ACSP9S01P	7/8/2003	Di-n-butylphthalate	ND		mg/kg	0.38	EPA 8270
ACSP9S01P	7/8/2003	Di-n-octylphthalate	ND		mg/kg	0.38	EPA 8270
ACSP9S01P	7/8/2003	Fluoranthene	ND	U J	mg/kg	0.38	EPA 8270
ACSP9S01P	7/8/2003	Fluorene	ND		mg/kg	0.38	EPA 8270
ACSP9S01P	7/8/2003	Hexachloro-1,3-butadiene	ND		mg/kg	0.38	EPA 8270
ACSP9S01P	7/8/2003	Hexachlorobenzene	ND		mg/kg	0.38	EPA 8270
ACSP9S01P	7/8/2003	Hexachlorocyclopentadiene	ND		mg/kg	0.38	EPA 8270
ACSP9S01P	7/8/2003	Hexachloroethane	ND		mg/kg	0.38	EPA 8270
ACSP9S01P	7/8/2003	Indeno(1,2,3-cd)pyrene	ND		mg/kg	0.38	EPA 8270
ACSP9S01P	7/8/2003	Isophorone	ND		mg/kg	0.38	EPA 8270
ACSP9S01P	7/8/2003	Naphthalene	ND		mg/kg	0.38	EPA 8270
ACSP9S01P	7/8/2003	Nitrobenzene	ND		mg/kg	0.38	EPA 8270
ACSP9S01P	7/8/2003	N-Nitroso-di-n-propylamine	ND		mg/kg	0.38	EPA 8270
ACSP9S01P	7/8/2003	N-Nitrosodiphenylamine	ND		mg/kg	0.38	EPA 8270
ACSP9S01P	7/8/2003	Pentachlorophenol	ND		mg/kg	1.8	EPA 8270
ACSP9S01P	7/8/2003	Phenanthrene	ND		mg/kg	0.38	EPA 8270
ACSP9S01P	7/8/2003	Phenol	ND		mg/kg	0.38	EPA 8270
ACSP9S01P	7/8/2003	Pyrene	ND		mg/kg	0.38	EPA 8270
ACSP9S02P	7/8/2003	Arsenic	1.57	J	mg/kg	1.15	EPA 6010
ACSP9S02P	7/8/2003	Barium	98.2	J	mg/kg	1.15	EPA 6010
ACSP9S02P	7/8/2003	Cadmium	ND		mg/kg	0.574	EPA 6010
ACSP9S02P	7/8/2003	Chromium	11.7	J	mg/kg	0.574	EPA 6010
ACSP9S02P	7/8/2003	Lead	8.47	J	mg/kg	0.574	EPA 6010
ACSP9S02P	7/8/2003	Selenium	10.1	J	mg/kg	1.72	EPA 6010
ACSP9S02P	7/8/2003	Silver	ND		mg/kg	0.803	EPA 6010
ACSP9S02P	7/8/2003	Mercury	ND	U J	mg/kg	0.165	EPA 7471
ACSP9S02P	7/8/2003	4,4'-DDD	ND		mg/kg	0.0039	EPA 8081A
ACSP9S02P	7/8/2003	4,4'-DDE	ND		mg/kg	0.0039	EPA 8081A
ACSP9S02P	7/8/2003	4,4'-DDT	ND		mg/kg	0.0039	EPA 8081A
ACSP9S02P	7/8/2003	Aldrin	ND		mg/kg	0.0020	EPA 8081A
ACSP9S02P	7/8/2003	alpha-BHC	ND		mg/kg	0.0020	EPA 8081A

APPENDIX E
SOIL ANALYTICAL RESULTS
Remedial Investigation Report
Arkansas City MGP Site

Sample Location	Date	Parameter	conc		Units	Reporting Limit[1]	Method
ACSP9S02P	7/8/2003	alpha-Chlordane	ND		mg/kg	0.0020	EPA 8081A
ACSP9S02P	7/8/2003	beta-BHC	ND		mg/kg	0.0020	EPA 8081A
ACSP9S02P	7/8/2003	Chlordane	ND		mg/kg	0.0079	EPA 8081A
ACSP9S02P	7/8/2003	delta-BHC	ND		mg/kg	0.0020	EPA 8081A
ACSP9S02P	7/8/2003	Dieldrin	ND		mg/kg	0.0039	EPA 8081A
ACSP9S02P	7/8/2003	Endosulfan I	ND		mg/kg	0.0020	EPA 8081A
ACSP9S02P	7/8/2003	Endosulfan II	ND		mg/kg	0.0039	EPA 8081A
ACSP9S02P	7/8/2003	Endosulfan sulfate	ND		mg/kg	0.020	EPA 8081A
ACSP9S02P	7/8/2003	Endrin	ND		mg/kg	0.0039	EPA 8081A
ACSP9S02P	7/8/2003	Endrin aldehyde	ND		mg/kg	0.0039	EPA 8081A
ACSP9S02P	7/8/2003	Endrin ketone	ND		mg/kg	0.0039	EPA 8081A
ACSP9S02P	7/8/2003	gamma-BHC (Lindane)	ND		mg/kg	0.0020	EPA 8081A
ACSP9S02P	7/8/2003	gamma-Chlordane	ND		mg/kg	0.0020	EPA 8081A
ACSP9S02P	7/8/2003	Heptachlor	ND		mg/kg	0.0020	EPA 8081A
ACSP9S02P	7/8/2003	Heptachlor epoxide	ND		mg/kg	0.0020	EPA 8081A
ACSP9S02P	7/8/2003	Methoxychlor	ND		mg/kg	0.020	EPA 8081A
ACSP9S02P	7/8/2003	Toxaphene	ND		mg/kg	0.098	EPA 8081A
ACSP9S02P	7/8/2003	1,1,1,2-Tetrachloroethane	ND	U J	mg/kg	0.0058	EPA 8260
ACSP9S02P	7/8/2003	1,1,1-Trichloroethane	ND	U J	mg/kg	0.0058	EPA 8260
ACSP9S02P	7/8/2003	1,1,2,2-Tetrachloroethane	ND	U J	mg/kg	0.0058	EPA 8260
ACSP9S02P	7/8/2003	1,1,2-Trichloroethane	ND	U J	mg/kg	0.0058	EPA 8260
ACSP9S02P	7/8/2003	1,1-Dichloroethane	ND	U J	mg/kg	0.0058	EPA 8260
ACSP9S02P	7/8/2003	1,1-Dichloroethene	ND	U J	mg/kg	0.0058	EPA 8260
ACSP9S02P	7/8/2003	1,1-Dichloropropene	ND	U J	mg/kg	0.0058	EPA 8260
ACSP9S02P	7/8/2003	1,2,3-Trichlorobenzene	ND	U J	mg/kg	0.0058	EPA 8260
ACSP9S02P	7/8/2003	1,2,3-Trichloropropane	ND	U J	mg/kg	0.0058	EPA 8260
ACSP9S02P	7/8/2003	1,2,4-Trichlorobenzene	ND	U J	mg/kg	0.0058	EPA 8260
ACSP9S02P	7/8/2003	1,2,4-Trimethylbenzene	ND	U J	mg/kg	0.0058	EPA 8260
ACSP9S02P	7/8/2003	1,2-Dibromo-3-chloropropane	ND	U J	mg/kg	0.0058	EPA 8260
ACSP9S02P	7/8/2003	1,2-Dibromoethane (EDB)	ND	U J	mg/kg	0.0058	EPA 8260
ACSP9S02P	7/8/2003	1,2-Dichlorobenzene	ND	U J	mg/kg	0.0058	EPA 8260
ACSP9S02P	7/8/2003	1,2-Dichloroethane	ND	U J	mg/kg	0.0058	EPA 8260
ACSP9S02P	7/8/2003	1,2-Dichloropropane	ND	U J	mg/kg	0.0058	EPA 8260
ACSP9S02P	7/8/2003	1,3,5-Trimethylbenzene	ND	U J	mg/kg	0.0058	EPA 8260
ACSP9S02P	7/8/2003	1,3-Dichlorobenzene	ND	U J	mg/kg	0.0058	EPA 8260
ACSP9S02P	7/8/2003	1,3-Dichloropropane	ND	U J	mg/kg	0.0058	EPA 8260
ACSP9S02P	7/8/2003	1,4-Dichlorobenzene	ND	U J	mg/kg	0.0058	EPA 8260
ACSP9S02P	7/8/2003	2,2-Dichloropropane	ND	U J	mg/kg	0.0058	EPA 8260
ACSP9S02P	7/8/2003	2-Butanone (MEK)	ND	U J	mg/kg	0.012	EPA 8260
ACSP9S02P	7/8/2003	2-Chloroethylvinyl ether	ND	U J	mg/kg	0.0058	EPA 8260
ACSP9S02P	7/8/2003	2-Chlorotoluene	ND	U J	mg/kg	0.0058	EPA 8260
ACSP9S02P	7/8/2003	2-Hexanone	ND	U J	mg/kg	0.12	EPA 8260
ACSP9S02P	7/8/2003	4-Chlorotoluene	ND	U J	mg/kg	0.0058	EPA 8260
ACSP9S02P	7/8/2003	4-Methyl-2-pentanone (MIBK)	ND	U J	mg/kg	0.012	EPA 8260
ACSP9S02P	7/8/2003	Acetone	ND	U J	mg/kg	0.023	EPA 8260
ACSP9S02P	7/8/2003	Benzene	ND	U J	mg/kg	0.0058	EPA 8260

APPENDIX E
SOIL ANALYTICAL RESULTS
Remedial Investigation Report
Arkansas City MGP Site

Sample Location	Date	Parameter	conc		Units	Reporting Limit[1]	Method
ACSP9S02P	7/8/2003	Bromobenzene	ND	U J	mg/kg	0.0058	EPA 8260
ACSP9S02P	7/8/2003	Bromochloromethane	ND	U J	mg/kg	0.0058	EPA 8260
ACSP9S02P	7/8/2003	Bromodichloromethane	ND	U J	mg/kg	0.0058	EPA 8260
ACSP9S02P	7/8/2003	Bromoform	ND	U J	mg/kg	0.0058	EPA 8260
ACSP9S02P	7/8/2003	Bromomethane	ND	U J	mg/kg	0.0058	EPA 8260
ACSP9S02P	7/8/2003	Carbon tetrachloride	ND	U J	mg/kg	0.0058	EPA 8260
ACSP9S02P	7/8/2003	Chlorobenzene	ND	U J	mg/kg	0.0058	EPA 8260
ACSP9S02P	7/8/2003	Chloroethane	ND	U J	mg/kg	0.0058	EPA 8260
ACSP9S02P	7/8/2003	Chloroform	ND	U J	mg/kg	0.0058	EPA 8260
ACSP9S02P	7/8/2003	Chloromethane	ND	U J	mg/kg	0.0058	EPA 8260
ACSP9S02P	7/8/2003	cis-1,2-Dichloroethene	ND	U J	mg/kg	0.0058	EPA 8260
ACSP9S02P	7/8/2003	cis-1,3-Dichloropropene	ND	U J	mg/kg	0.0058	EPA 8260
ACSP9S02P	7/8/2003	Dibromochloromethane	ND	U J	mg/kg	0.0058	EPA 8260
ACSP9S02P	7/8/2003	Dibromomethane	ND	U J	mg/kg	0.0058	EPA 8260
ACSP9S02P	7/8/2003	Dichlorodifluoromethane	ND	U J	mg/kg	0.0058	EPA 8260
ACSP9S02P	7/8/2003	Ethylbenzene	ND	U J	mg/kg	0.0058	EPA 8260
ACSP9S02P	7/8/2003	Hexachloro-1,3-butadiene	ND	U J	mg/kg	0.0058	EPA 8260
ACSP9S02P	7/8/2003	Isopropylbenzene	ND	U J	mg/kg	0.0058	EPA 8260
ACSP9S02P	7/8/2003	m/p-xylene	ND	U J	mg/kg	0.0058	EPA 8260
ACSP9S02P	7/8/2003	Methyl tert-butyl ether	ND	U J	mg/kg	0.0058	EPA 8260
ACSP9S02P	7/8/2003	Methylene chloride	ND	U J	mg/kg	0.0058	EPA 8260
ACSP9S02P	7/8/2003	Naphthalene	ND	U J	mg/kg	0.012	EPA 8260
ACSP9S02P	7/8/2003	n-Butylbenzene	ND	U J	mg/kg	0.0058	EPA 8260
ACSP9S02P	7/8/2003	n-Propylbenzene	ND	U J	mg/kg	0.0058	EPA 8260
ACSP9S02P	7/8/2003	o-Xylene	ND	U J	mg/kg	0.0058	EPA 8260
ACSP9S02P	7/8/2003	p-Isopropyltoluene	ND	U J	mg/kg	0.0058	EPA 8260
ACSP9S02P	7/8/2003	sec-Butylbenzene	ND	U J	mg/kg	0.0058	EPA 8260
ACSP9S02P	7/8/2003	Styrene	ND	U J	mg/kg	0.0058	EPA 8260
ACSP9S02P	7/8/2003	tert-Butylbenzene	ND	U J	mg/kg	0.0058	EPA 8260
ACSP9S02P	7/8/2003	Tetrachloroethene	ND	U J	mg/kg	0.0058	EPA 8260
ACSP9S02P	7/8/2003	Toluene	ND	U J	mg/kg	0.0058	EPA 8260
ACSP9S02P	7/8/2003	trans-1,2-Dichloroethene	ND	U J	mg/kg	0.0058	EPA 8260
ACSP9S02P	7/8/2003	trans-1,3-Dichloropropene	ND	U J	mg/kg	0.0058	EPA 8260
ACSP9S02P	7/8/2003	Trichloroethene	ND	U J	mg/kg	0.0058	EPA 8260
ACSP9S02P	7/8/2003	Trichlorofluoromethane	ND	U J	mg/kg	0.0058	EPA 8260
ACSP9S02P	7/8/2003	Vinyl chloride	ND	U J	mg/kg	0.0058	EPA 8260
ACSP9S02P	7/8/2003	1,2,4-Trichlorobenzene	ND		mg/kg	0.39	EPA 8270
ACSP9S02P	7/8/2003	1,2-Dichlorobenzene	ND		mg/kg	0.39	EPA 8270
ACSP9S02P	7/8/2003	1,3-Dichlorobenzene	ND		mg/kg	0.39	EPA 8270
ACSP9S02P	7/8/2003	1,4-Dichlorobenzene	ND		mg/kg	0.39	EPA 8270
ACSP9S02P	7/8/2003	1-Bromo-4-phenoxybenzene	ND		mg/kg	0.39	EPA 8270
ACSP9S02P	7/8/2003	2,4,5-Trichlorophenol	ND		mg/kg	0.39	EPA 8270
ACSP9S02P	7/8/2003	2,4,6-Trichlorophenol	ND		mg/kg	0.39	EPA 8270
ACSP9S02P	7/8/2003	2,4-Dichlorophenol	ND		mg/kg	0.39	EPA 8270
ACSP9S02P	7/8/2003	2,4-Dimethylphenol	ND		mg/kg	0.39	EPA 8270
ACSP9S02P	7/8/2003	2,4-Dinitrophenol	ND		mg/kg	1.9	EPA 8270

APPENDIX E
SOIL ANALYTICAL RESULTS
Remedial Investigation Report
Arkansas City MGP Site

Sample Location	Date	Parameter	conc		Units	Reporting Limit[1]	Method
ACSP9S02P	7/8/2003	2,4-Dinitrotoluene	ND		mg/kg	0.39	EPA 8270
ACSP9S02P	7/8/2003	2,6-Dinitrotoluene	ND		mg/kg	0.39	EPA 8270
ACSP9S02P	7/8/2003	2-Chloronaphthalene	ND		mg/kg	0.39	EPA 8270
ACSP9S02P	7/8/2003	2-Chlorophenol	ND		mg/kg	0.39	EPA 8270
ACSP9S02P	7/8/2003	2-Methylnaphthalene	ND		mg/kg	0.39	EPA 8270
ACSP9S02P	7/8/2003	2-Methylphenol (o-cresol)	ND		mg/kg	0.39	EPA 8270
ACSP9S02P	7/8/2003	2-Nitroaniline	ND		mg/kg	1.9	EPA 8270
ACSP9S02P	7/8/2003	2-Nitrophenol	ND		mg/kg	0.39	EPA 8270
ACSP9S02P	7/8/2003	3,3'-Dichlorobenzidine	ND	U J	mg/kg	0.78	EPA 8270
ACSP9S02P	7/8/2003	3-Nitroaniline	ND		mg/kg	1.9	EPA 8270
ACSP9S02P	7/8/2003	4,6-Dinitro-2-methylphenol	ND		mg/kg	1.9	EPA 8270
ACSP9S02P	7/8/2003	4-Chloro-3-methylphenol	ND		mg/kg	0.78	EPA 8270
ACSP9S02P	7/8/2003	4-Chloroaniline	ND		mg/kg	0.78	EPA 8270
ACSP9S02P	7/8/2003	4-Chlorophenylphenyl ether	ND		mg/kg	0.39	EPA 8270
ACSP9S02P	7/8/2003	4-Methylphenol	ND		mg/kg	0.39	EPA 8270
ACSP9S02P	7/8/2003	4-Nitroaniline	ND	U J	mg/kg	1.9	EPA 8270
ACSP9S02P	7/8/2003	4-Nitrophenol	ND		mg/kg	1.9	EPA 8270
ACSP9S02P	7/8/2003	Acenaphthene	ND		mg/kg	0.39	EPA 8270
ACSP9S02P	7/8/2003	Acenaphthylene	ND		mg/kg	0.39	EPA 8270
ACSP9S02P	7/8/2003	Anthracene	ND		mg/kg	0.39	EPA 8270
ACSP9S02P	7/8/2003	Benzo(a)anthracene	ND		mg/kg	0.39	EPA 8270
ACSP9S02P	7/8/2003	Benzo(a)pyrene	ND		mg/kg	0.39	EPA 8270
ACSP9S02P	7/8/2003	Benzo(b)fluoranthene	ND	U J	mg/kg	0.39	EPA 8270
ACSP9S02P	7/8/2003	Benzo(g,h,i)perylene	ND		mg/kg	0.39	EPA 8270
ACSP9S02P	7/8/2003	Benzo(k)fluoranthene	ND	U J	mg/kg	0.39	EPA 8270
ACSP9S02P	7/8/2003	Benzoic acid	ND		mg/kg	1.9	EPA 8270
ACSP9S02P	7/8/2003	Benzyl alcohol	ND		mg/kg	0.78	EPA 8270
ACSP9S02P	7/8/2003	Bis(2-chloroethoxy)methane	ND		mg/kg	0.39	EPA 8270
ACSP9S02P	7/8/2003	bis(2-Chloroethyl) ether	ND		mg/kg	0.39	EPA 8270
ACSP9S02P	7/8/2003	Bis(2-chloroisopropyl) ether	ND		mg/kg	0.39	EPA 8270
ACSP9S02P	7/8/2003	Bis(2-ethylhexyl)phthalate	ND		mg/kg	0.39	EPA 8270
ACSP9S02P	7/8/2003	Butylbenzylphthalate	ND	U J	mg/kg	0.39	EPA 8270
ACSP9S02P	7/8/2003	Chrysene	ND		mg/kg	0.39	EPA 8270
ACSP9S02P	7/8/2003	Dibenzo(a,h)anthracene	ND		mg/kg	0.39	EPA 8270
ACSP9S02P	7/8/2003	Dibenzofuran	ND		mg/kg	0.39	EPA 8270
ACSP9S02P	7/8/2003	Diethylphthalate	ND		mg/kg	0.39	EPA 8270
ACSP9S02P	7/8/2003	Dimethylphthalate	ND		mg/kg	0.39	EPA 8270
ACSP9S02P	7/8/2003	Di-n-butylphthalate	ND		mg/kg	0.39	EPA 8270
ACSP9S02P	7/8/2003	Di-n-octylphthalate	ND		mg/kg	0.39	EPA 8270
ACSP9S02P	7/8/2003	Fluoranthene	ND		mg/kg	0.39	EPA 8270
ACSP9S02P	7/8/2003	Fluorene	ND		mg/kg	0.39	EPA 8270
ACSP9S02P	7/8/2003	Hexachloro-1,3-butadiene	ND		mg/kg	0.39	EPA 8270
ACSP9S02P	7/8/2003	Hexachlorobenzene	ND		mg/kg	0.39	EPA 8270
ACSP9S02P	7/8/2003	Hexachlorocyclopentadiene	ND		mg/kg	0.39	EPA 8270
ACSP9S02P	7/8/2003	Hexachloroethane	ND		mg/kg	0.39	EPA 8270
ACSP9S02P	7/8/2003	Indeno(1,2,3-cd)pyrene	ND		mg/kg	0.39	EPA 8270

APPENDIX E
SOIL ANALYTICAL RESULTS
Remedial Investigation Report
Arkansas City MGP Site

Sample Location	Date	Parameter	conc	Units	Reporting Limit[1]	Method
ACSP9S02P	7/8/2003	Isophorone	ND	mg/kg	0.39	EPA 8270
ACSP9S02P	7/8/2003	Naphthalene	ND	mg/kg	0.39	EPA 8270
ACSP9S02P	7/8/2003	Nitrobenzene	ND	mg/kg	0.39	EPA 8270
ACSP9S02P	7/8/2003	N-Nitroso-di-n-propylamine	ND	mg/kg	0.39	EPA 8270
ACSP9S02P	7/8/2003	N-Nitrosodiphenylamine	ND	mg/kg	0.39	EPA 8270
ACSP9S02P	7/8/2003	Pentachlorophenol	ND	mg/kg	1.9	EPA 8270
ACSP9S02P	7/8/2003	Phenanthrene	ND	mg/kg	0.39	EPA 8270
ACSP9S02P	7/8/2003	Phenol	ND	mg/kg	0.39	EPA 8270
ACSP9S02P	7/8/2003	Pyrene	ND	mg/kg	0.39	EPA 8270

Note:

[1] All analytical methods were reported to the practical quantitation limit with the exception of EPA 8310, which was reported to the method detection limit. The appropriate values are reflected in this column.

APPENDIX F

GROUND WATER ANALYTICAL RESULTS

Water Samples Collected During the Remedial Investigation

Sample Number	Sample Description
ACMW1W01P	Ground water sample from well MW-1
ACMW2W01P	Ground water sample from well MW-2
ACMW3W01P	Ground water sample from well MW-3
ACMW5W01D	Duplicate ground water sample from well MW-5
ACMW5W01P	Primary ground water sample from well MW-5
ACWTDRUMW01P	Sample from drum of decontamination and purge water
TRIP BLANK 1	Trip blank submitted with samples for VOC analysis
TRIP BLANK 2	Trip blank submitted with samples for VOC analysis

APPENDIX F
GROUND WATER ANALYTICAL RESULTS
Remedial Investigation Report
Arkansas City MGP Site

Sample Location	Date	Parameter	Conc.		Units	PQL	Method
ACMW1W01P	7/11/2003	1,1,1,2-Tetrachloroethane	ND		ug/L	1	EPA 8260
ACMW1W01P	7/11/2003	1,1,1-Trichloroethane	ND		ug/L	1	EPA 8260
ACMW1W01P	7/11/2003	1,1,2,2-Tetrachloroethane	ND		ug/L	1	EPA 8260
ACMW1W01P	7/11/2003	1,1,2-Trichloroethane	ND		ug/L	1	EPA 8260
ACMW1W01P	7/11/2003	1,1-Dichloroethane	ND		ug/L	1	EPA 8260
ACMW1W01P	7/11/2003	1,1-Dichloroethene	ND		ug/L	1	EPA 8260
ACMW1W01P	7/11/2003	1,1-Dichloropropene	ND		ug/L	1	EPA 8260
ACMW1W01P	7/11/2003	1,2,3-Trichlorobenzene	ND		ug/L	1	EPA 8260
ACMW1W01P	7/11/2003	1,2,3-Trichloropropane	ND		ug/L	2.5	EPA 8260
ACMW1W01P	7/11/2003	1,2,4-Trichlorobenzene	ND		ug/L	1	EPA 8260
ACMW1W01P	7/11/2003	1,2,4-Trimethylbenzene	ND		ug/L	1	EPA 8260
ACMW1W01P	7/11/2003	1,2-Dibromo-3-chloropropane	ND		ug/L	2.5	EPA 8260
ACMW1W01P	7/11/2003	1,2-Dibromoethane (EDB)	ND		ug/L	1	EPA 8260
ACMW1W01P	7/11/2003	1,2-Dichlorobenzene	ND		ug/L	1	EPA 8260
ACMW1W01P	7/11/2003	1,2-Dichloroethane	ND		ug/L	1	EPA 8260
ACMW1W01P	7/11/2003	1,2-Dichloropropane	ND		ug/L	1	EPA 8260
ACMW1W01P	7/11/2003	1,3,5-Trimethylbenzene	ND		ug/L	1	EPA 8260
ACMW1W01P	7/11/2003	1,3-Dichlorobenzene	ND		ug/L	1	EPA 8260
ACMW1W01P	7/11/2003	1,3-Dichloropropane	ND		ug/L	1	EPA 8260
ACMW1W01P	7/11/2003	1,4-Dichlorobenzene	ND		ug/L	1	EPA 8260
ACMW1W01P	7/11/2003	2,2-Dichloropropane	ND		ug/L	1	EPA 8260
ACMW1W01P	7/11/2003	2-Chloroethylvinyl ether	ND		ug/L	10	EPA 8260
ACMW1W01P	7/11/2003	2-Chlorotoluene	ND		ug/L	1	EPA 8260
ACMW1W01P	7/11/2003	2-Hexanone	ND	UJ	ug/L	10	EPA 8260
ACMW1W01P	7/11/2003	4-Chlorotoluene	ND		ug/L	1	EPA 8260
ACMW1W01P	7/11/2003	4-Methyl-2-pentanone (MIBK)	ND	UJ	ug/L	10	EPA 8260
ACMW1W01P	7/11/2003	Acetone	ND		ug/L	10	EPA 8260
ACMW1W01P	7/11/2003	Benzene	ND		ug/L	1	EPA 8260
ACMW1W01P	7/11/2003	Bromobenzene	ND		ug/L	1	EPA 8260
ACMW1W01P	7/11/2003	Bromochloromethane	ND		ug/L	1	EPA 8260
ACMW1W01P	7/11/2003	Bromodichloromethane	ND		ug/L	1	EPA 8260
ACMW1W01P	7/11/2003	Bromoform	ND		ug/L	1	EPA 8260
ACMW1W01P	7/11/2003	2-Butanone (MEK)	ND	UJ	ug/L	10	EPA 8260
ACMW1W01P	7/11/2003	Bromomethane	ND		ug/L	1	EPA 8260
ACMW1W01P	7/11/2003	Carbon tetrachloride	ND		ug/L	1	EPA 8260
ACMW1W01P	7/11/2003	Chlorobenzene	ND		ug/L	1	EPA 8260
ACMW1W01P	7/11/2003	Chloroethane	ND		ug/L	1	EPA 8260
ACMW1W01P	7/11/2003	Chloroform	ND		ug/L	1	EPA 8260
ACMW1W01P	7/11/2003	Chloromethane	ND		ug/L	1	EPA 8260
ACMW1W01P	7/11/2003	cis-1,2-Dichloroethene	ND		ug/L	1	EPA 8260
ACMW1W01P	7/11/2003	cis-1,3-Dichloropropene	ND		ug/L	1	EPA 8260
ACMW1W01P	7/11/2003	Dibromochloromethane	ND		ug/L	1	EPA 8260
ACMW1W01P	7/11/2003	Dibromomethane	ND		ug/L	1	EPA 8260
ACMW1W01P	7/11/2003	Dichlorodifluoromethane	ND		ug/L	1	EPA 8260
ACMW1W01P	7/11/2003	Ethylbenzene	ND		ug/L	1	EPA 8260

APPENDIX F
GROUND WATER ANALYTICAL RESULTS
Remedial Investigation Report
Arkansas City MGP Site

Sample Location	Date	Parameter	Conc.		Units	PQL	Method
ACMW1W01P	7/11/2003	Hexachloro-1,3-butadiene	ND		ug/L	1	EPA 8260
ACMW1W01P	7/11/2003	Isopropylbenzene	ND		ug/L	1	EPA 8260
ACMW1W01P	7/11/2003	m/p-xylene	ND		ug/L	1.3	EPA 8260
ACMW1W01P	7/11/2003	Methyl tert-butyl ether	ND		ug/L	1	EPA 8260
ACMW1W01P	7/11/2003	Methylene chloride	ND	UJ	ug/L	1	EPA 8260
ACMW1W01P	7/11/2003	Naphthalene	ND		ug/L	1	EPA 8260
ACMW1W01P	7/11/2003	n-Butylbenzene	ND		ug/L	1	EPA 8260
ACMW1W01P	7/11/2003	n-Propylbenzene	ND		ug/L	1	EPA 8260
ACMW1W01P	7/11/2003	o-Xylene	ND		ug/L	1.1	EPA 8260
ACMW1W01P	7/11/2003	p-Isopropyltoluene	ND		ug/L	1	EPA 8260
ACMW1W01P	7/11/2003	sec-Butylbenzene	ND		ug/L	1	EPA 8260
ACMW1W01P	7/11/2003	Styrene	ND		ug/L	1	EPA 8260
ACMW1W01P	7/11/2003	tert-Butylbenzene	ND		ug/L	1	EPA 8260
ACMW1W01P	7/11/2003	Tetrachloroethene	ND		ug/L	1	EPA 8260
ACMW1W01P	7/11/2003	Toluene	ND		ug/L	1	EPA 8260
ACMW1W01P	7/11/2003	trans-1,2-Dichloroethene	ND		ug/L	1	EPA 8260
ACMW1W01P	7/11/2003	trans-1,3-Dichloropropene	ND		ug/L	1	EPA 8260
ACMW1W01P	7/11/2003	Trichloroethene	ND		ug/L	1	EPA 8260
ACMW1W01P	7/11/2003	Trichlorofluoromethane	ND		ug/L	1	EPA 8260
ACMW1W01P	7/11/2003	Vinyl chloride	ND		ug/L	1	EPA 8260
ACMW1W01P	7/11/2003	1,2,4-Trichlorobenzene	ND		ug/L	10	EPA 8270
ACMW1W01P	7/11/2003	1,2-Dichlorobenzene	ND		ug/L	10	EPA 8270
ACMW1W01P	7/11/2003	1,3-Dichlorobenzene	ND		ug/L	10	EPA 8270
ACMW1W01P	7/11/2003	1,4-Dichlorobenzene	ND		ug/L	10	EPA 8270
ACMW1W01P	7/11/2003	1-Bromo-4-phenoxybenzene	ND		ug/L	10	EPA 8270
ACMW1W01P	7/11/2003	2,4,5-Trichlorophenol	ND		ug/L	50	EPA 8270
ACMW1W01P	7/11/2003	2,4,6-Trichlorophenol	ND		ug/L	10	EPA 8270
ACMW1W01P	7/11/2003	2,4-Dichlorophenol	ND		ug/L	10	EPA 8270
ACMW1W01P	7/11/2003	2,4-Dimethylphenol	ND		ug/L	10	EPA 8270
ACMW1W01P	7/11/2003	2,4-Dinitrophenol	ND		ug/L	50	EPA 8270
ACMW1W01P	7/11/2003	2,4-Dinitrotoluene	ND		ug/L	10	EPA 8270
ACMW1W01P	7/11/2003	2,6-Dinitrotoluene	ND		ug/L	10	EPA 8270
ACMW1W01P	7/11/2003	2-Chloronaphthalene	ND		ug/L	10	EPA 8270
ACMW1W01P	7/11/2003	2-Chlorophenol	ND		ug/L	10	EPA 8270
ACMW1W01P	7/11/2003	2-Methylnaphthalene	ND	UJ	ug/L	10	EPA 8270
ACMW1W01P	7/11/2003	2-Methylphenol (o-cresol)	ND		ug/L	10	EPA 8270
ACMW1W01P	7/11/2003	2-Nitroaniline	ND		ug/L	50	EPA 8270
ACMW1W01P	7/11/2003	2-Nitrophenol	ND		ug/L	10	EPA 8270
ACMW1W01P	7/11/2003	3,3'-Dichlorobenzidine	ND	UJ	ug/L	20	EPA 8270
ACMW1W01P	7/11/2003	3-Nitroaniline	ND		ug/L	50	EPA 8270
ACMW1W01P	7/11/2003	4,6-Dinitro-2-methylphenol	ND		ug/L	50	EPA 8270
ACMW1W01P	7/11/2003	4-Chloro-3-methylphenol	ND		ug/L	20	EPA 8270
ACMW1W01P	7/11/2003	4-Chloroaniline	ND		ug/L	20	EPA 8270
ACMW1W01P	7/11/2003	4-Chlorophenylphenyl ether	ND		ug/L	10	EPA 8270
ACMW1W01P	7/11/2003	4-Methylphenol	ND		ug/L	10	EPA 8270

APPENDIX F
GROUND WATER ANALYTICAL RESULTS
Remedial Investigation Report
Arkansas City MGP Site

Sample Location	Date	Parameter	Conc.		Units	PQL	Method
ACMW1W01P	7/11/2003	4-Nitroaniline	ND	UJ	ug/L	50	EPA 8270
ACMW1W01P	7/11/2003	4-Nitrophenol	ND		ug/L	50	EPA 8270
ACMW1W01P	7/11/2003	Acenaphthene	ND		ug/L	10	EPA 8270
ACMW1W01P	7/11/2003	Acenaphthylene	ND		ug/L	10	EPA 8270
ACMW1W01P	7/11/2003	Anthracene	ND		ug/L	10	EPA 8270
ACMW1W01P	7/11/2003	Benzo(a)anthracene	ND		ug/L	10	EPA 8270
ACMW1W01P	7/11/2003	Benzo(a)pyrene	ND		ug/L	10	EPA 8270
ACMW1W01P	7/11/2003	Benzo(b)fluoranthene	ND	UJ	ug/L	10	EPA 8270
ACMW1W01P	7/11/2003	Benzo(g,h,i)perylene	ND		ug/L	10	EPA 8270
ACMW1W01P	7/11/2003	Benzo(k)fluoranthene	ND	UJ	ug/L	10	EPA 8270
ACMW1W01P	7/11/2003	Benzoic acid	ND		ug/L	50	EPA 8270
ACMW1W01P	7/11/2003	Benzyl alcohol	ND		ug/L	20	EPA 8270
ACMW1W01P	7/11/2003	Bis(2-chloroethoxy)methane	ND		ug/L	10	EPA 8270
ACMW1W01P	7/11/2003	bis(2-Chloroethyl) ether	ND		ug/L	10	EPA 8270
ACMW1W01P	7/11/2003	Bis(2-chloroisopropyl) ether	ND		ug/L	10	EPA 8270
ACMW1W01P	7/11/2003	Bis(2-ethylhexyl)phthalate	ND		ug/L	10	EPA 8270
ACMW1W01P	7/11/2003	Butylbenzylphthalate	ND	UJ	ug/L	10	EPA 8270
ACMW1W01P	7/11/2003	Chrysene	ND		ug/L	10	EPA 8270
ACMW1W01P	7/11/2003	Dibenz(a,h)anthracene	ND		ug/L	10	EPA 8270
ACMW1W01P	7/11/2003	Dibenzofuran	ND		ug/L	10	EPA 8270
ACMW1W01P	7/11/2003	Diethylphthalate	ND		ug/L	10	EPA 8270
ACMW1W01P	7/11/2003	Dimethylphthalate	ND		ug/L	10	EPA 8270
ACMW1W01P	7/11/2003	Di-n-butylphthalate	ND		ug/L	10	EPA 8270
ACMW1W01P	7/11/2003	Di-n-octylphthalate	ND		ug/L	10	EPA 8270
ACMW1W01P	7/11/2003	Fluoranthene	ND		ug/L	10	EPA 8270
ACMW1W01P	7/11/2003	Fluorene	ND		ug/L	10	EPA 8270
ACMW1W01P	7/11/2003	Hexachloro-1,3-butadiene	ND		ug/L	10	EPA 8270
ACMW1W01P	7/11/2003	Hexachlorobenzene	ND		ug/L	10	EPA 8270
ACMW1W01P	7/11/2003	Hexachlorocyclopentadiene	ND		ug/L	10	EPA 8270
ACMW1W01P	7/11/2003	Hexachloroethane	ND		ug/L	10	EPA 8270
ACMW1W01P	7/11/2003	Indeno(1,2,3-cd)pyrene	ND		ug/L	10	EPA 8270
ACMW1W01P	7/11/2003	Isophorone	ND		ug/L	10	EPA 8270
ACMW1W01P	7/11/2003	Naphthalene	ND		ug/L	10	EPA 8270
ACMW1W01P	7/11/2003	Nitrobenzene	ND		ug/L	10	EPA 8270
ACMW1W01P	7/11/2003	N-Nitroso-di-n-propylamine	ND		ug/L	10	EPA 8270
ACMW1W01P	7/11/2003	N-Nitrosodiphenylamine	ND		ug/L	10	EPA 8270
ACMW1W01P	7/11/2003	Pentachlorophenol	ND		ug/L	50	EPA 8270
ACMW1W01P	7/11/2003	Phenanthrene	ND		ug/L	10	EPA 8270
ACMW1W01P	7/11/2003	Phenol	33		ug/L	10	EPA 8270
ACMW1W01P	7/11/2003	Pyrene	ND		ug/L	10	EPA 8270
ACMW1W01P	7/11/2003	4,4'-DDD	ND	UJ	ug/L	0.13	EPA 8081A
ACMW1W01P	7/11/2003	4,4'-DDE	ND		ug/L	0.13	EPA 8081A
ACMW1W01P	7/11/2003	4,4'-DDT	ND	UJ	ug/L	0.13	EPA 8081A
ACMW1W01P	7/11/2003	Aldrin	ND		ug/L	0.063	EPA 8081A
ACMW1W01P	7/11/2003	alpha-BHC	ND	UJ	ug/L	0.063	EPA 8081A

APPENDIX F
GROUND WATER ANALYTICAL RESULTS
Remedial Investigation Report
Arkansas City MGP Site

Sample Location	Date	Parameter	Conc.		Units	PQL	Method
ACMW1W01P	7/11/2003	alpha-Chlordane	ND		ug/L	0.063	EPA 8081A
ACMW1W01P	7/11/2003	beta-BHC	ND		ug/L	0.063	EPA 8081A
ACMW1W01P	7/11/2003	Chlordane	ND		ug/L	0.25	EPA 8081A
ACMW1W01P	7/11/2003	delta-BHC	ND		ug/L	0.063	EPA 8081A
ACMW1W01P	7/11/2003	Dieldrin	ND		ug/L	0.13	EPA 8081A
ACMW1W01P	7/11/2003	Endosulfan I	ND	UJ	ug/L	0.063	EPA 8081A
ACMW1W01P	7/11/2003	Endosulfan II	ND		ug/L	0.13	EPA 8081A
ACMW1W01P	7/11/2003	Endosulfan sulfate	ND		ug/L	0.63	EPA 8081A
ACMW1W01P	7/11/2003	Endrin	ND	UJ	ug/L	0.13	EPA 8081A
ACMW1W01P	7/11/2003	Endrin aldehyde	ND		ug/L	0.13	EPA 8081A
ACMW1W01P	7/11/2003	Endrin ketone	ND		ug/L	0.13	EPA 8081A
ACMW1W01P	7/11/2003	gamma-BHC (Lindane)	ND	UJ	ug/L	0.063	EPA 8081A
ACMW1W01P	7/11/2003	gamma-Chlordane	ND		ug/L	0.063	EPA 8081A
ACMW1W01P	7/11/2003	Heptachlor	ND	UJ	ug/L	0.063	EPA 8081A
ACMW1W01P	7/11/2003	Heptachlor epoxide	ND		ug/L	0.063	EPA 8081A
ACMW1W01P	7/11/2003	Methoxychlor	ND		ug/L	0.63	EPA 8081A
ACMW1W01P	7/11/2003	Toxaphene	ND		ug/L	3.2	EPA 8081A
ACMW1W01P	7/11/2003	Cyanide, total	ND		ug/L	5.0	EPA 335.3
ACMW1W01P	7/11/2003	Arsenic	13	J	ug/L	10	EPA 6010
ACMW1W01P	7/11/2003	Barium	144	J	ug/L	10	EPA 6010
ACMW1W01P	7/11/2003	Cadmium	ND		ug/L	5	EPA 6010
ACMW1W01P	7/11/2003	Chromium	18.2	J	ug/L	5	EPA 6010
ACMW1W01P	7/11/2003	Lead	ND		ug/L	5	EPA 6010
ACMW1W01P	7/11/2003	Selenium	ND		ug/L	75	EPA 6010
ACMW1W01P	7/11/2003	Silver	ND		ug/L	7	EPA 6010
ACMW1W01P	7/11/2003	Mercury	ND		ug/L	0.2	EPA 7470
ACMW2W01P	7/11/2003	1,1,1,2-Tetrachloroethane	ND		ug/L	1	EPA 8260
ACMW2W01P	7/11/2003	1,1,1-Trichloroethane	ND		ug/L	1	EPA 8260
ACMW2W01P	7/11/2003	1,1,2,2-Tetrachloroethane	ND		ug/L	1	EPA 8260
ACMW2W01P	7/11/2003	1,1,2-Trichloroethane	ND		ug/L	1	EPA 8260
ACMW2W01P	7/11/2003	1,1-Dichloroethane	ND		ug/L	1	EPA 8260
ACMW2W01P	7/11/2003	1,1-Dichloroethene	ND		ug/L	1	EPA 8260
ACMW2W01P	7/11/2003	1,1-Dichloropropene	ND		ug/L	1	EPA 8260
ACMW2W01P	7/11/2003	1,2,3-Trichlorobenzene	ND		ug/L	1	EPA 8260
ACMW2W01P	7/11/2003	1,2,3-Trichloropropane	ND		ug/L	2.5	EPA 8260
ACMW2W01P	7/11/2003	1,2,4-Trichlorobenzene	ND		ug/L	1	EPA 8260
ACMW2W01P	7/11/2003	1,2,4-Trimethylbenzene	ND		ug/L	1	EPA 8260
ACMW2W01P	7/11/2003	1,2-Dibromo-3-chloropropane	ND		ug/L	2.5	EPA 8260
ACMW2W01P	7/11/2003	1,2-Dibromoethane (EDB)	ND		ug/L	1	EPA 8260
ACMW2W01P	7/11/2003	1,2-Dichlorobenzene	ND		ug/L	1	EPA 8260
ACMW2W01P	7/11/2003	1,2-Dichloroethane	ND		ug/L	1	EPA 8260
ACMW2W01P	7/11/2003	1,2-Dichloropropane	ND		ug/L	1	EPA 8260
ACMW2W01P	7/11/2003	1,3,5-Trimethylbenzene	ND		ug/L	1	EPA 8260
ACMW2W01P	7/11/2003	1,3-Dichlorobenzene	ND		ug/L	1	EPA 8260
ACMW2W01P	7/11/2003	1,3-Dichloropropane	ND		ug/L	1	EPA 8260

APPENDIX F
GROUND WATER ANALYTICAL RESULTS
Remedial Investigation Report
Arkansas City MGP Site

Sample Location	Date	Parameter	Conc.		Units	PQL	Method
ACMW2W01P	7/11/2003	1,4-Dichlorobenzene	ND		ug/L	1	EPA 8260
ACMW2W01P	7/11/2003	2,2-Dichloropropane	ND		ug/L	1	EPA 8260
ACMW2W01P	7/11/2003	2-Chloroethylvinyl ether	ND		ug/L	10	EPA 8260
ACMW2W01P	7/11/2003	2-Chlorotoluene	ND		ug/L	1	EPA 8260
ACMW2W01P	7/11/2003	2-Hexanone	ND	UJ	ug/L	10	EPA 8260
ACMW2W01P	7/11/2003	4-Chlorotoluene	ND		ug/L	1	EPA 8260
ACMW2W01P	7/11/2003	4-Methyl-2-pentanone (MIBK)	ND	UJ	ug/L	10	EPA 8260
ACMW2W01P	7/11/2003	Acetone	ND		ug/L	10	EPA 8260
ACMW2W01P	7/11/2003	Benzene	ND		ug/L	1	EPA 8260
ACMW2W01P	7/11/2003	Bromobenzene	ND		ug/L	1	EPA 8260
ACMW2W01P	7/11/2003	Bromochloromethane	ND		ug/L	1	EPA 8260
ACMW2W01P	7/11/2003	Bromodichloromethane	ND		ug/L	1	EPA 8260
ACMW2W01P	7/11/2003	Bromoform	ND	UJ	ug/L	1	EPA 8260
ACMW2W01P	7/11/2003	Bromomethane	ND		ug/L	1	EPA 8260
ACMW2W01P	7/11/2003	2-Butanone (MEK)	ND	UJ	ug/L	10	EPA 8260
ACMW2W01P	7/11/2003	Carbon tetrachloride	ND		ug/L	1	EPA 8260
ACMW2W01P	7/11/2003	Chlorobenzene	ND		ug/L	1	EPA 8260
ACMW2W01P	7/11/2003	Chloroethane	ND		ug/L	1	EPA 8260
ACMW2W01P	7/11/2003	Chloroform	ND		ug/L	1	EPA 8260
ACMW2W01P	7/11/2003	Chloromethane	ND		ug/L	1	EPA 8260
ACMW2W01P	7/11/2003	cis-1,2-Dichloroethene	ND		ug/L	1	EPA 8260
ACMW2W01P	7/11/2003	cis-1,3-Dichloropropene	ND		ug/L	1	EPA 8260
ACMW2W01P	7/11/2003	Dibromochloromethane	ND		ug/L	1	EPA 8260
ACMW2W01P	7/11/2003	Dibromomethane	ND		ug/L	1	EPA 8260
ACMW2W01P	7/11/2003	Dichlorodifluoromethane	ND		ug/L	1	EPA 8260
ACMW2W01P	7/11/2003	Ethylbenzene	ND		ug/L	1	EPA 8260
ACMW2W01P	7/11/2003	Hexachloro-1,3-butadiene	ND		ug/L	1	EPA 8260
ACMW2W01P	7/11/2003	Isopropylbenzene	ND		ug/L	1	EPA 8260
ACMW2W01P	7/11/2003	m/p-xylene	ND		ug/L	1.3	EPA 8260
ACMW2W01P	7/11/2003	Methyl tert-butyl ether	ND		ug/L	1	EPA 8260
ACMW2W01P	7/11/2003	Methylene chloride	ND	UJ	ug/L	1	EPA 8260
ACMW2W01P	7/11/2003	Naphthalene	ND		ug/L	1	EPA 8260
ACMW2W01P	7/11/2003	n-Butylbenzene	ND		ug/L	1	EPA 8260
ACMW2W01P	7/11/2003	n-Propylbenzene	ND		ug/L	1	EPA 8260
ACMW2W01P	7/11/2003	o-Xylene	ND		ug/L	1.1	EPA 8260
ACMW2W01P	7/11/2003	p-Isopropyltoluene	ND		ug/L	1	EPA 8260
ACMW2W01P	7/11/2003	sec-Butylbenzene	ND		ug/L	1	EPA 8260
ACMW2W01P	7/11/2003	Styrene	ND		ug/L	1	EPA 8260
ACMW2W01P	7/11/2003	tert-Butylbenzene	ND		ug/L	1	EPA 8260
ACMW2W01P	7/11/2003	Tetrachloroethene	ND		ug/L	1	EPA 8260
ACMW2W01P	7/11/2003	Toluene	ND		ug/L	1	EPA 8260
ACMW2W01P	7/11/2003	trans-1,2-Dichloroethene	ND		ug/L	1	EPA 8260
ACMW2W01P	7/11/2003	trans-1,3-Dichloropropene	ND		ug/L	1	EPA 8260
ACMW2W01P	7/11/2003	Trichloroethene	ND		ug/L	1	EPA 8260
ACMW2W01P	7/11/2003	Trichlorofluoromethane	ND		ug/L	1	EPA 8260

APPENDIX F
GROUND WATER ANALYTICAL RESULTS
Remedial Investigation Report
Arkansas City MGP Site

Sample Location	Date	Parameter	Conc.		Units	PQL	Method
ACMW2W01P	7/11/2003	Vinyl chloride	ND		ug/L	1	EPA 8260
ACMW2W01P	7/11/2003	1,2,4-Trichlorobenzene	ND		ug/L	10	EPA 8270
ACMW2W01P	7/11/2003	1,2-Dichlorobenzene	ND		ug/L	10	EPA 8270
ACMW2W01P	7/11/2003	1,3-Dichlorobenzene	ND		ug/L	10	EPA 8270
ACMW2W01P	7/11/2003	1,4-Dichlorobenzene	ND		ug/L	10	EPA 8270
ACMW2W01P	7/11/2003	1-Bromo-4-phenoxybenzene	ND		ug/L	10	EPA 8270
ACMW2W01P	7/11/2003	2,4,5-Trichlorophenol	ND		ug/L	50	EPA 8270
ACMW2W01P	7/11/2003	2,4,6-Trichlorophenol	ND		ug/L	10	EPA 8270
ACMW2W01P	7/11/2003	2,4-Dichlorophenol	ND		ug/L	10	EPA 8270
ACMW2W01P	7/11/2003	2,4-Dimethylphenol	ND		ug/L	10	EPA 8270
ACMW2W01P	7/11/2003	2,4-Dinitrophenol	ND		ug/L	50	EPA 8270
ACMW2W01P	7/11/2003	2,4-Dinitrotoluene	ND		ug/L	10	EPA 8270
ACMW2W01P	7/11/2003	2,6-Dinitrotoluene	ND		ug/L	10	EPA 8270
ACMW2W01P	7/11/2003	2-Chloronaphthalene	ND		ug/L	10	EPA 8270
ACMW2W01P	7/11/2003	2-Chlorophenol	ND		ug/L	10	EPA 8270
ACMW2W01P	7/11/2003	2-Methylnaphthalene	ND		ug/L	10	EPA 8270
ACMW2W01P	7/11/2003	2-Methylphenol (o-cresol)	ND		ug/L	10	EPA 8270
ACMW2W01P	7/11/2003	2-Nitroaniline	ND		ug/L	50	EPA 8270
ACMW2W01P	7/11/2003	2-Nitrophenol	ND		ug/L	10	EPA 8270
ACMW2W01P	7/11/2003	3,3'-Dichlorobenzidine	ND	UJ	ug/L	20	EPA 8270
ACMW2W01P	7/11/2003	3-Nitroaniline	ND		ug/L	50	EPA 8270
ACMW2W01P	7/11/2003	4,6-Dinitro-2-methylphenol	ND		ug/L	50	EPA 8270
ACMW2W01P	7/11/2003	4-Chloro-3-methylphenol	ND		ug/L	20	EPA 8270
ACMW2W01P	7/11/2003	4-Chloroaniline	ND		ug/L	20	EPA 8270
ACMW2W01P	7/11/2003	4-Chlorophenylphenyl ether	ND		ug/L	10	EPA 8270
ACMW2W01P	7/11/2003	4-Methylphenol	ND		ug/L	10	EPA 8270
ACMW2W01P	7/11/2003	4-Nitroaniline	ND	UJ	ug/L	50	EPA 8270
ACMW2W01P	7/11/2003	4-Nitrophenol	ND		ug/L	50	EPA 8270
ACMW2W01P	7/11/2003	Acenaphthene	ND		ug/L	10	EPA 8270
ACMW2W01P	7/11/2003	Acenaphthylene	ND		ug/L	10	EPA 8270
ACMW2W01P	7/11/2003	Anthracene	ND		ug/L	10	EPA 8270
ACMW2W01P	7/11/2003	Benzo(a)anthracene	ND		ug/L	10	EPA 8270
ACMW2W01P	7/11/2003	Benzo(a)pyrene	ND		ug/L	10	EPA 8270
ACMW2W01P	7/11/2003	Benzo(b)fluoranthene	ND	UJ	ug/L	10	EPA 8270
ACMW2W01P	7/11/2003	Benzo(g,h,i)perylene	ND		ug/L	10	EPA 8270
ACMW2W01P	7/11/2003	Benzo(k)fluoranthene	ND	UJ	ug/L	10	EPA 8270
ACMW2W01P	7/11/2003	Benzoic acid	ND		ug/L	50	EPA 8270
ACMW2W01P	7/11/2003	Benzyl alcohol	ND		ug/L	20	EPA 8270
ACMW2W01P	7/11/2003	Bis(2-chloroethoxy)methane	ND		ug/L	10	EPA 8270
ACMW2W01P	7/11/2003	bis(2-Chloroethyl) ether	ND		ug/L	10	EPA 8270
ACMW2W01P	7/11/2003	Bis(2-chloroisopropyl) ether	ND		ug/L	10	EPA 8270
ACMW2W01P	7/11/2003	Bis(2-ethylhexyl)phthalate	ND		ug/L	10	EPA 8270
ACMW2W01P	7/11/2003	Butylbenzylphthalate	ND	UJ	ug/L	10	EPA 8270
ACMW2W01P	7/11/2003	Chrysene	ND		ug/L	10	EPA 8270
ACMW2W01P	7/11/2003	Dibenz(a,h)anthracene	ND		ug/L	10	EPA 8270

APPENDIX F
GROUND WATER ANALYTICAL RESULTS
Remedial Investigation Report
Arkansas City MGP Site

Sample Location	Date	Parameter	Conc.		Units	PQL	Method
ACMW2W01P	7/11/2003	Dibenzofuran	ND		ug/L	10	EPA 8270
ACMW2W01P	7/11/2003	Diethylphthalate	ND		ug/L	10	EPA 8270
ACMW2W01P	7/11/2003	Dimethylphthalate	ND		ug/L	10	EPA 8270
ACMW2W01P	7/11/2003	Di-n-butylphthalate	ND		ug/L	10	EPA 8270
ACMW2W01P	7/11/2003	Di-n-octylphthalate	ND		ug/L	10	EPA 8270
ACMW2W01P	7/11/2003	Fluoranthene	ND		ug/L	10	EPA 8270
ACMW2W01P	7/11/2003	Fluorene	ND		ug/L	10	EPA 8270
ACMW2W01P	7/11/2003	Hexachloro-1,3-butadiene	ND		ug/L	10	EPA 8270
ACMW2W01P	7/11/2003	Hexachlorobenzene	ND		ug/L	10	EPA 8270
ACMW2W01P	7/11/2003	Hexachlorocyclopentadiene	ND		ug/L	10	EPA 8270
ACMW2W01P	7/11/2003	Hexachloroethane	ND		ug/L	10	EPA 8270
ACMW2W01P	7/11/2003	Indeno(1,2,3-cd)pyrene	ND		ug/L	10	EPA 8270
ACMW2W01P	7/11/2003	Isophorone	ND		ug/L	10	EPA 8270
ACMW2W01P	7/11/2003	Naphthalene	ND		ug/L	10	EPA 8270
ACMW2W01P	7/11/2003	Nitrobenzene	ND		ug/L	10	EPA 8270
ACMW2W01P	7/11/2003	N-Nitroso-di-n-propylamine	ND	UJ	ug/L	10	EPA 8270
ACMW2W01P	7/11/2003	N-Nitrosodiphenylamine	ND		ug/L	10	EPA 8270
ACMW2W01P	7/11/2003	Pentachlorophenol	ND		ug/L	50	EPA 8270
ACMW2W01P	7/11/2003	Phenanthrene	ND		ug/L	10	EPA 8270
ACMW2W01P	7/11/2003	Phenol	ND		ug/L	10	EPA 8270
ACMW2W01P	7/11/2003	Pyrene	ND		ug/L	10	EPA 8270
ACMW2W01P	7/11/2003	Cyanide, total	ND		ug/L	5.0	EPA 335.3
ACMW2W01P	7/11/2003	Arsenic	ND		ug/L	10	EPA 6010
ACMW2W01P	7/11/2003	Barium	342	J	ug/L	10	EPA 6010
ACMW2W01P	7/11/2003	Cadmium	ND		ug/L	5	EPA 6010
ACMW2W01P	7/11/2003	Chromium	ND		ug/L	5	EPA 6010
ACMW2W01P	7/11/2003	Lead	ND		ug/L	5	EPA 6010
ACMW2W01P	7/11/2003	Selenium	ND		ug/L	75	EPA 6010
ACMW2W01P	7/11/2003	Silver	ND		ug/L	7	EPA 6010
ACMW2W01P	7/11/2003	Mercury	ND		ug/L	0.2	EPA 7470
ACMW3W01P	7/11/2003	1,1,1,2-Tetrachloroethane	ND		ug/L	1	EPA 8260
ACMW3W01P	7/11/2003	1,1,1-Trichloroethane	ND		ug/L	1	EPA 8260
ACMW3W01P	7/11/2003	1,1,2,2-Tetrachloroethane	ND		ug/L	1	EPA 8260
ACMW3W01P	7/11/2003	1,1,2-Trichloroethane	ND		ug/L	1	EPA 8260
ACMW3W01P	7/11/2003	1,1-Dichloroethane	ND		ug/L	1	EPA 8260
ACMW3W01P	7/11/2003	1,1-Dichloroethene	ND		ug/L	1	EPA 8260
ACMW3W01P	7/11/2003	1,1-Dichloropropene	ND		ug/L	1	EPA 8260
ACMW3W01P	7/11/2003	1,2,3-Trichlorobenzene	ND		ug/L	1	EPA 8260
ACMW3W01P	7/11/2003	1,2,3-Trichloropropane	ND		ug/L	2.5	EPA 8260
ACMW3W01P	7/11/2003	1,2,4-Trichlorobenzene	ND		ug/L	1	EPA 8260
ACMW3W01P	7/11/2003	1,2,4-Trimethylbenzene	ND		ug/L	1	EPA 8260
ACMW3W01P	7/11/2003	1,2-Dibromo-3-chloropropane	ND		ug/L	2.5	EPA 8260
ACMW3W01P	7/11/2003	1,2-Dibromoethane (EDB)	ND		ug/L	1	EPA 8260
ACMW3W01P	7/11/2003	1,2-Dichlorobenzene	ND		ug/L	1	EPA 8260
ACMW3W01P	7/11/2003	1,2-Dichloroethane	ND		ug/L	1	EPA 8260

APPENDIX F
GROUND WATER ANALYTICAL RESULTS
Remedial Investigation Report
Arkansas City MGP Site

Sample Location	Date	Parameter	Conc.		Units	PQL	Method
ACMW3W01P	7/11/2003	1,2-Dichloropropane	ND		ug/L	1	EPA 8260
ACMW3W01P	7/11/2003	1,3,5-Trimethylbenzene	ND		ug/L	1	EPA 8260
ACMW3W01P	7/11/2003	1,3-Dichlorobenzene	ND		ug/L	1	EPA 8260
ACMW3W01P	7/11/2003	1,3-Dichloropropane	ND		ug/L	1	EPA 8260
ACMW3W01P	7/11/2003	1,4-Dichlorobenzene	ND		ug/L	1	EPA 8260
ACMW3W01P	7/11/2003	2,2-Dichloropropane	ND		ug/L	1	EPA 8260
ACMW3W01P	7/11/2003	2-Chloroethylvinyl ether	ND		ug/L	10	EPA 8260
ACMW3W01P	7/11/2003	2-Chlorotoluene	ND		ug/L	1	EPA 8260
ACMW3W01P	7/11/2003	2-Hexanone	ND	UJ	ug/L	10	EPA 8260
ACMW3W01P	7/11/2003	4-Chlorotoluene	ND		ug/L	1	EPA 8260
ACMW3W01P	7/11/2003	4-Methyl-2-pentanone (MIBK)	ND	UJ	ug/L	10	EPA 8260
ACMW3W01P	7/11/2003	Acetone	ND		ug/L	10	EPA 8260
ACMW3W01P	7/11/2003	Benzene	ND		ug/L	1	EPA 8260
ACMW3W01P	7/11/2003	Bromobenzene	ND		ug/L	1	EPA 8260
ACMW3W01P	7/11/2003	Bromochloromethane	ND		ug/L	1	EPA 8260
ACMW3W01P	7/11/2003	Bromodichloromethane	ND		ug/L	1	EPA 8260
ACMW3W01P	7/11/2003	Bromoform	ND		ug/L	1	EPA 8260
ACMW3W01P	7/11/2003	Bromomethane	ND		ug/L	1	EPA 8260
ACMW3W01P	7/11/2003	2-Butanone (MEK)	ND		ug/L	10	EPA 8260
ACMW3W01P	7/11/2003	Carbon tetrachloride	ND		ug/L	1	EPA 8260
ACMW3W01P	7/11/2003	Chlorobenzene	ND		ug/L	1	EPA 8260
ACMW3W01P	7/11/2003	Chloroethane	ND		ug/L	1	EPA 8260
ACMW3W01P	7/11/2003	Chloroform	ND		ug/L	1	EPA 8260
ACMW3W01P	7/11/2003	Chloromethane	ND		ug/L	1	EPA 8260
ACMW3W01P	7/11/2003	cis-1,2-Dichloroethene	ND		ug/L	1	EPA 8260
ACMW3W01P	7/11/2003	cis-1,3-Dichloropropene	ND		ug/L	1	EPA 8260
ACMW3W01P	7/11/2003	Dibromochloromethane	ND		ug/L	1	EPA 8260
ACMW3W01P	7/11/2003	Dibromomethane	ND		ug/L	1	EPA 8260
ACMW3W01P	7/11/2003	Dichlorodifluoromethane	ND		ug/L	1	EPA 8260
ACMW3W01P	7/11/2003	Ethylbenzene	ND		ug/L	1	EPA 8260
ACMW3W01P	7/11/2003	Hexachloro-1,3-butadiene	ND		ug/L	1	EPA 8260
ACMW3W01P	7/11/2003	Isopropylbenzene	ND		ug/L	1	EPA 8260
ACMW3W01P	7/11/2003	m/p-xylene	ND		ug/L	1.3	EPA 8260
ACMW3W01P	7/11/2003	Methyl tert-butyl ether	ND		ug/L	1	EPA 8260
ACMW3W01P	7/11/2003	Methylene chloride	ND	UJ	ug/L	1	EPA 8260
ACMW3W01P	7/11/2003	Naphthalene	ND		ug/L	1	EPA 8260
ACMW3W01P	7/11/2003	n-Butylbenzene	ND		ug/L	1	EPA 8260
ACMW3W01P	7/11/2003	n-Propylbenzene	ND		ug/L	1	EPA 8260
ACMW3W01P	7/11/2003	o-Xylene	ND		ug/L	1.1	EPA 8260
ACMW3W01P	7/11/2003	p-Isopropyltoluene	ND		ug/L	1	EPA 8260
ACMW3W01P	7/11/2003	sec-Butylbenzene	ND		ug/L	1	EPA 8260
ACMW3W01P	7/11/2003	Styrene	ND		ug/L	1	EPA 8260
ACMW3W01P	7/11/2003	tert-Butylbenzene	ND		ug/L	1	EPA 8260
ACMW3W01P	7/11/2003	Tetrachloroethene	ND		ug/L	1	EPA 8260
ACMW3W01P	7/11/2003	Toluene	ND		ug/L	1	EPA 8260

APPENDIX F
GROUND WATER ANALYTICAL RESULTS
Remedial Investigation Report
Arkansas City MGP Site

Sample Location	Date	Parameter	Conc.		Units	PQL	Method
ACMW3W01P	7/11/2003	trans-1,2-Dichloroethene	ND		ug/L	1	EPA 8260
ACMW3W01P	7/11/2003	trans-1,3-Dichloropropene	ND		ug/L	1	EPA 8260
ACMW3W01P	7/11/2003	Trichloroethene	ND		ug/L	1	EPA 8260
ACMW3W01P	7/11/2003	Trichlorofluoromethane	ND		ug/L	1	EPA 8260
ACMW3W01P	7/11/2003	Vinyl chloride	ND		ug/L	1	EPA 8260
ACMW3W01P	7/11/2003	1,2,4-Trichlorobenzene	ND		ug/L	10	EPA 8270
ACMW3W01P	7/11/2003	1,2-Dichlorobenzene	ND		ug/L	10	EPA 8270
ACMW3W01P	7/11/2003	1,3-Dichlorobenzene	ND		ug/L	10	EPA 8270
ACMW3W01P	7/11/2003	1,4-Dichlorobenzene	ND		ug/L	10	EPA 8270
ACMW3W01P	7/11/2003	1-Bromo-4-phenoxybenzene	ND		ug/L	10	EPA 8270
ACMW3W01P	7/11/2003	2,4,5-Trichlorophenol	ND		ug/L	50	EPA 8270
ACMW3W01P	7/11/2003	2,4,6-Trichlorophenol	ND		ug/L	10	EPA 8270
ACMW3W01P	7/11/2003	2,4-Dichlorophenol	ND		ug/L	10	EPA 8270
ACMW3W01P	7/11/2003	2,4-Dimethylphenol	ND		ug/L	10	EPA 8270
ACMW3W01P	7/11/2003	2,4-Dinitrophenol	ND	UJ	ug/L	50	EPA 8270
ACMW3W01P	7/11/2003	2,4-Dinitrotoluene	ND		ug/L	10	EPA 8270
ACMW3W01P	7/11/2003	2,6-Dinitrotoluene	ND		ug/L	10	EPA 8270
ACMW3W01P	7/11/2003	2-Chloronaphthalene	ND		ug/L	10	EPA 8270
ACMW3W01P	7/11/2003	2-Chlorophenol	ND		ug/L	10	EPA 8270
ACMW3W01P	7/11/2003	2-Methylnaphthalene	ND		ug/L	10	EPA 8270
ACMW3W01P	7/11/2003	2-Methylphenol (o-cresol)	ND		ug/L	10	EPA 8270
ACMW3W01P	7/11/2003	2-Nitroaniline	ND		ug/L	50	EPA 8270
ACMW3W01P	7/11/2003	2-Nitrophenol	ND		ug/L	10	EPA 8270
ACMW3W01P	7/11/2003	3,3'-Dichlorobenzidine	ND	UJ	ug/L	20	EPA 8270
ACMW3W01P	7/11/2003	3-Nitroaniline	ND	UJ	ug/L	50	EPA 8270
ACMW3W01P	7/11/2003	4,6-Dinitro-2-methylphenol	ND		ug/L	50	EPA 8270
ACMW3W01P	7/11/2003	4-Chloro-3-methylphenol	ND		ug/L	20	EPA 8270
ACMW3W01P	7/11/2003	4-Chloroaniline	ND		ug/L	20	EPA 8270
ACMW3W01P	7/11/2003	4-Chlorophenylphenyl ether	ND		ug/L	10	EPA 8270
ACMW3W01P	7/11/2003	4-Methylphenol	ND		ug/L	10	EPA 8270
ACMW3W01P	7/11/2003	4-Nitroaniline	ND	UJ	ug/L	50	EPA 8270
ACMW3W01P	7/11/2003	4-Nitrophenol	ND		ug/L	50	EPA 8270
ACMW3W01P	7/11/2003	Acenaphthene	ND		ug/L	10	EPA 8270
ACMW3W01P	7/11/2003	Acenaphthylene	ND		ug/L	10	EPA 8270
ACMW3W01P	7/11/2003	Anthracene	ND		ug/L	10	EPA 8270
ACMW3W01P	7/11/2003	Benzo(a)anthracene	ND		ug/L	10	EPA 8270
ACMW3W01P	7/11/2003	Benzo(a)pyrene	ND		ug/L	10	EPA 8270
ACMW3W01P	7/11/2003	Benzo(b)fluoranthene	ND	UJ	ug/L	10	EPA 8270
ACMW3W01P	7/11/2003	Benzo(g,h,i)perylene	ND		ug/L	10	EPA 8270
ACMW3W01P	7/11/2003	Benzo(k)fluoranthene	ND	UJ	ug/L	10	EPA 8270
ACMW3W01P	7/11/2003	Benzoic acid	ND		ug/L	50	EPA 8270
ACMW3W01P	7/11/2003	Benzyl alcohol	ND		ug/L	20	EPA 8270
ACMW3W01P	7/11/2003	Bis(2-chloroethoxy)methane	ND		ug/L	10	EPA 8270
ACMW3W01P	7/11/2003	bis(2-Chloroethyl) ether	ND		ug/L	10	EPA 8270
ACMW3W01P	7/11/2003	Bis(2-chloroisopropyl) ether	ND	UJ	ug/L	10	EPA 8270

APPENDIX F
GROUND WATER ANALYTICAL RESULTS
Remedial Investigation Report
Arkansas City MGP Site

Sample Location	Date	Parameter	Conc.		Units	PQL	Method
ACMW3W01P	7/11/2003	Bis(2-ethylhexyl)phthalate	ND		ug/L	10	EPA 8270
ACMW3W01P	7/11/2003	Butylbenzylphthalate	ND	UJ	ug/L	10	EPA 8270
ACMW3W01P	7/11/2003	Chrysene	ND		ug/L	10	EPA 8270
ACMW3W01P	7/11/2003	Dibenz(a,h)anthracene	ND		ug/L	10	EPA 8270
ACMW3W01P	7/11/2003	Dibenzofuran	ND		ug/L	10	EPA 8270
ACMW3W01P	7/11/2003	Diethylphthalate	ND		ug/L	10	EPA 8270
ACMW3W01P	7/11/2003	Dimethylphthalate	ND		ug/L	10	EPA 8270
ACMW3W01P	7/11/2003	Di-n-butylphthalate	ND	UJ	ug/L	10	EPA 8270
ACMW3W01P	7/11/2003	Di-n-octylphthalate	ND		ug/L	10	EPA 8270
ACMW3W01P	7/11/2003	Fluoranthene	ND	UJ	ug/L	10	EPA 8270
ACMW3W01P	7/11/2003	Fluorene	ND		ug/L	10	EPA 8270
ACMW3W01P	7/11/2003	Hexachloro-1,3-butadiene	ND		ug/L	10	EPA 8270
ACMW3W01P	7/11/2003	Hexachlorobenzene	ND		ug/L	10	EPA 8270
ACMW3W01P	7/11/2003	Hexachlorocyclopentadiene	ND		ug/L	10	EPA 8270
ACMW3W01P	7/11/2003	Hexachloroethane	ND		ug/L	10	EPA 8270
ACMW3W01P	7/11/2003	Indeno(1,2,3-cd)pyrene	ND		ug/L	10	EPA 8270
ACMW3W01P	7/11/2003	Isophorone	ND		ug/L	10	EPA 8270
ACMW3W01P	7/11/2003	Naphthalene	ND		ug/L	10	EPA 8270
ACMW3W01P	7/11/2003	Nitrobenzene	ND		ug/L	10	EPA 8270
ACMW3W01P	7/11/2003	N-Nitroso-di-n-propylamine	ND	UJ	ug/L	10	EPA 8270
ACMW3W01P	7/11/2003	N-Nitrosodiphenylamine	ND	UJ	ug/L	10	EPA 8270
ACMW3W01P	7/11/2003	Pentachlorophenol	ND		ug/L	50	EPA 8270
ACMW3W01P	7/11/2003	Phenanthrene	ND		ug/L	10	EPA 8270
ACMW3W01P	7/11/2003	Phenol	ND		ug/L	10	EPA 8270
ACMW3W01P	7/11/2003	Pyrene	ND		ug/L	10	EPA 8270
ACMW3W01P	7/11/2003	4,4'-DDD	ND	UJ	ug/L	0.1	EPA 8081A
ACMW3W01P	7/11/2003	4,4'-DDE	ND		ug/L	0.1	EPA 8081A
ACMW3W01P	7/11/2003	4,4'-DDT	ND	UJ	ug/L	0.1	EPA 8081A
ACMW3W01P	7/11/2003	Aldrin	ND		ug/L	0.05	EPA 8081A
ACMW3W01P	7/11/2003	alpha-BHC	ND	UJ	ug/L	0.05	EPA 8081A
ACMW3W01P	7/11/2003	alpha-Chlordane	ND		ug/L	0.05	EPA 8081A
ACMW3W01P	7/11/2003	beta-BHC	ND		ug/L	0.05	EPA 8081A
ACMW3W01P	7/11/2003	Chlordane	ND		ug/L	0.2	EPA 8081A
ACMW3W01P	7/11/2003	delta-BHC	ND		ug/L	0.05	EPA 8081A
ACMW3W01P	7/11/2003	Dieldrin	ND		ug/L	0.1	EPA 8081A
ACMW3W01P	7/11/2003	Endosulfan I	ND	UJ	ug/L	0.05	EPA 8081A
ACMW3W01P	7/11/2003	Endosulfan II	ND		ug/L	0.1	EPA 8081A
ACMW3W01P	7/11/2003	Endosulfan sulfate	ND		ug/L	0.5	EPA 8081A
ACMW3W01P	7/11/2003	Endrin	ND	UJ	ug/L	0.1	EPA 8081A
ACMW3W01P	7/11/2003	Endrin aldehyde	ND		ug/L	0.1	EPA 8081A
ACMW3W01P	7/11/2003	Endrin ketone	ND		ug/L	0.1	EPA 8081A
ACMW3W01P	7/11/2003	gamma-BHC (Lindane)	ND	UJ	ug/L	0.05	EPA 8081A
ACMW3W01P	7/11/2003	gamma-Chlordane	ND		ug/L	0.05	EPA 8081A
ACMW3W01P	7/11/2003	Heptachlor	ND	UJ	ug/L	0.05	EPA 8081A
ACMW3W01P	7/11/2003	Heptachlor epoxide	ND		ug/L	0.05	EPA 8081A

APPENDIX F
GROUND WATER ANALYTICAL RESULTS
Remedial Investigation Report
Arkansas City MGP Site

Sample Location	Date	Parameter	Conc.		Units	PQL	Method
ACMW3W01P	7/11/2003	Methoxychlor	ND		ug/L	0.5	EPA 8081A
ACMW3W01P	7/11/2003	Toxaphene	ND		ug/L	2.5	EPA 8081A
ACMW3W01P	7/11/2003	Cyanide, total	ND		ug/L	5.0	EPA 335.3
ACMW3W01P	7/11/2003	Arsenic	11.5	J	ug/L	10	EPA 6010
ACMW3W01P	7/11/2003	Barium	305	J	ug/L	10	EPA 6010
ACMW3W01P	7/11/2003	Cadmium	ND		ug/L	5	EPA 6010
ACMW3W01P	7/11/2003	Chromium	8.13	J	ug/L	5	EPA 6010
ACMW3W01P	7/11/2003	Lead	ND		ug/L	5	EPA 6010
ACMW3W01P	7/11/2003	Selenium	ND		ug/L	75	EPA 6010
ACMW3W01P	7/11/2003	Silver	ND		ug/L	7	EPA 6010
ACMW3W01P	7/11/2003	Mercury	ND		ug/L	0.2	EPA 7470
ACMW5W01P	7/11/2003	1,1,1,2-Tetrachloroethane	ND		ug/L	1	EPA 8260
ACMW5W01P	7/11/2003	1,1,1-Trichloroethane	ND		ug/L	1	EPA 8260
ACMW5W01P	7/11/2003	1,1,2,2-Tetrachloroethane	ND		ug/L	1	EPA 8260
ACMW5W01P	7/11/2003	1,1,2-Trichloroethane	ND		ug/L	1	EPA 8260
ACMW5W01P	7/11/2003	1,1-Dichloroethane	ND		ug/L	1	EPA 8260
ACMW5W01P	7/11/2003	1,1-Dichloroethene	ND		ug/L	1	EPA 8260
ACMW5W01P	7/11/2003	1,1-Dichloropropene	ND		ug/L	1	EPA 8260
ACMW5W01P	7/11/2003	1,2,3-Trichlorobenzene	ND		ug/L	1	EPA 8260
ACMW5W01P	7/11/2003	1,2,3-Trichloropropane	ND		ug/L	2.5	EPA 8260
ACMW5W01P	7/11/2003	1,2,4-Trichlorobenzene	ND		ug/L	1	EPA 8260
ACMW5W01P	7/11/2003	1,2,4-Trimethylbenzene	ND		ug/L	1	EPA 8260
ACMW5W01P	7/11/2003	1,2-Dibromo-3-chloropropane	ND		ug/L	2.5	EPA 8260
ACMW5W01P	7/11/2003	1,2-Dibromoethane (EDB)	ND		ug/L	1	EPA 8260
ACMW5W01P	7/11/2003	1,2-Dichlorobenzene	ND		ug/L	1	EPA 8260
ACMW5W01P	7/11/2003	1,2-Dichloroethane	ND		ug/L	1	EPA 8260
ACMW5W01P	7/11/2003	1,2-Dichloropropane	ND		ug/L	1	EPA 8260
ACMW5W01P	7/11/2003	1,3,5-Trimethylbenzene	ND		ug/L	1	EPA 8260
ACMW5W01P	7/11/2003	1,3-Dichlorobenzene	ND		ug/L	1	EPA 8260
ACMW5W01P	7/11/2003	1,3-Dichloropropane	ND		ug/L	1	EPA 8260
ACMW5W01P	7/11/2003	1,4-Dichlorobenzene	ND		ug/L	1	EPA 8260
ACMW5W01P	7/11/2003	2,2-Dichloropropane	ND	UJ	ug/L	1	EPA 8260
ACMW5W01P	7/11/2003	2-Chloroethylvinyl ether	ND		ug/L	10	EPA 8260
ACMW5W01P	7/11/2003	2-Chlorotoluene	ND		ug/L	1	EPA 8260
ACMW5W01P	7/11/2003	2-Hexanone	ND		ug/L	10	EPA 8260
ACMW5W01P	7/11/2003	4-Chlorotoluene	ND		ug/L	1	EPA 8260
ACMW5W01P	7/11/2003	4-Methyl-2-pentanone (MIBK)	ND	UJ	ug/L	10	EPA 8260
ACMW5W01P	7/11/2003	Acetone	ND		ug/L	10	EPA 8260
ACMW5W01P	7/11/2003	Benzene	ND		ug/L	1	EPA 8260
ACMW5W01P	7/11/2003	Bromobenzene	ND		ug/L	1	EPA 8260
ACMW5W01P	7/11/2003	Bromochloromethane	ND		ug/L	1	EPA 8260
ACMW5W01P	7/11/2003	Bromodichloromethane	ND		ug/L	1	EPA 8260
ACMW5W01P	7/11/2003	Bromoform	ND		ug/L	1	EPA 8260
ACMW5W01P	7/11/2003	Bromomethane	ND	UJ	ug/L	1	EPA 8260
ACMW5W01P	7/11/2003	Carbon tetrachloride	ND	UJ	ug/L	1	EPA 8260

APPENDIX F
GROUND WATER ANALYTICAL RESULTS
Remedial Investigation Report
Arkansas City MGP Site

Sample Location	Date	Parameter	Conc.		Units	PQL	Method
ACMW5W01P	7/11/2003	Chlorobenzene	ND		ug/L	1	EPA 8260
ACMW5W01P	7/11/2003	Chloroethane	ND		ug/L	1	EPA 8260
ACMW5W01P	7/11/2003	Chloroform	ND		ug/L	1	EPA 8260
ACMW5W01P	7/11/2003	Chloromethane	ND	UJ	ug/L	1	EPA 8260
ACMW5W01P	7/11/2003	cis-1,2-Dichloroethene	ND		ug/L	1	EPA 8260
ACMW5W01P	7/11/2003	cis-1,3-Dichloropropene	ND		ug/L	1	EPA 8260
ACMW5W01P	7/11/2003	Dibromochloromethane	ND		ug/L	1	EPA 8260
ACMW5W01P	7/11/2003	Dibromomethane	ND		ug/L	1	EPA 8260
ACMW5W01P	7/11/2003	Dichlorodifluoromethane	ND	UJ	ug/L	1	EPA 8260
ACMW5W01P	7/11/2003	Ethylbenzene	ND		ug/L	1	EPA 8260
ACMW5W01P	7/11/2003	Hexachloro-1,3-butadiene	ND		ug/L	1	EPA 8260
ACMW5W01P	7/11/2003	Isopropylbenzene	ND		ug/L	1	EPA 8260
ACMW5W01P	7/11/2003	m/p-xylene	ND		ug/L	1.3	EPA 8260
ACMW5W01P	7/11/2003	Methyl ethyl ketone	ND		ug/L	10	EPA 8260
ACMW5W01P	7/11/2003	Methyl tert-butyl ether	ND		ug/L	1	EPA 8260
ACMW5W01P	7/11/2003	Methylene chloride	ND	UJ	ug/L	1	EPA 8260
ACMW5W01P	7/11/2003	Naphthalene	12		ug/L	1	EPA 8260
ACMW5W01P	7/11/2003	n-Butylbenzene	ND		ug/L	1	EPA 8260
ACMW5W01P	7/11/2003	n-Propylbenzene	ND		ug/L	1	EPA 8260
ACMW5W01P	7/11/2003	o-Xylene	ND		ug/L	1.1	EPA 8260
ACMW5W01P	7/11/2003	p-Isopropyltoluene	ND		ug/L	1	EPA 8260
ACMW5W01P	7/11/2003	sec-Butylbenzene	ND		ug/L	1	EPA 8260
ACMW5W01P	7/11/2003	Styrene	ND		ug/L	1	EPA 8260
ACMW5W01P	7/11/2003	tert-Butylbenzene	ND		ug/L	1	EPA 8260
ACMW5W01P	7/11/2003	Tetrachloroethene	ND		ug/L	1	EPA 8260
ACMW5W01P	7/11/2003	Toluene	ND		ug/L	1	EPA 8260
ACMW5W01P	7/11/2003	trans-1,2-Dichloroethene	ND		ug/L	1	EPA 8260
ACMW5W01P	7/11/2003	trans-1,3-Dichloropropene	ND		ug/L	1	EPA 8260
ACMW5W01P	7/11/2003	Trichloroethene	ND		ug/L	1	EPA 8260
ACMW5W01P	7/11/2003	Trichlorofluoromethane	ND		ug/L	1	EPA 8260
ACMW5W01P	7/11/2003	Vinyl chloride	ND		ug/L	1	EPA 8260
ACMW5W01P	7/11/2003	1,2,4-Trichlorobenzene	ND		ug/L	10	EPA 8270
ACMW5W01P	7/11/2003	1,2-Dichlorobenzene	ND		ug/L	10	EPA 8270
ACMW5W01P	7/11/2003	1,3-Dichlorobenzene	ND		ug/L	10	EPA 8270
ACMW5W01P	7/11/2003	1,4-Dichlorobenzene	ND		ug/L	10	EPA 8270
ACMW5W01P	7/11/2003	1-Bromo-4-phenoxybenzene	ND		ug/L	10	EPA 8270
ACMW5W01P	7/11/2003	2,4,5-Trichlorophenol	ND		ug/L	50	EPA 8270
ACMW5W01P	7/11/2003	2,4,6-Trichlorophenol	ND		ug/L	10	EPA 8270
ACMW5W01P	7/11/2003	2,4-Dichlorophenol	ND		ug/L	10	EPA 8270
ACMW5W01P	7/11/2003	2,4-Dimethylphenol	ND		ug/L	10	EPA 8270
ACMW5W01P	7/11/2003	2,4-Dinitrophenol	ND		ug/L	50	EPA 8270
ACMW5W01P	7/11/2003	2,4-Dinitrotoluene	ND		ug/L	10	EPA 8270
ACMW5W01P	7/11/2003	2,6-Dinitrotoluene	ND		ug/L	10	EPA 8270
ACMW5W01P	7/11/2003	2-Chloronaphthalene	ND		ug/L	10	EPA 8270
ACMW5W01P	7/11/2003	2-Chlorophenol	ND		ug/L	10	EPA 8270

APPENDIX F
GROUND WATER ANALYTICAL RESULTS
Remedial Investigation Report
Arkansas City MGP Site

Sample Location	Date	Parameter	Conc.		Units	PQL	Method
ACMW5W01P	7/11/2003	2-Methylnaphthalene	ND		ug/L	10	EPA 8270
ACMW5W01P	7/11/2003	2-Methylphenol (o-cresol)	ND		ug/L	10	EPA 8270
ACMW5W01P	7/11/2003	2-Nitroaniline	ND		ug/L	50	EPA 8270
ACMW5W01P	7/11/2003	2-Nitrophenol	ND		ug/L	10	EPA 8270
ACMW5W01P	7/11/2003	3,3'-Dichlorobenzidine	ND	UJ	ug/L	20	EPA 8270
ACMW5W01P	7/11/2003	3-Nitroaniline	ND		ug/L	50	EPA 8270
ACMW5W01P	7/11/2003	4,6-Dinitro-2-methylphenol	ND		ug/L	50	EPA 8270
ACMW5W01P	7/11/2003	4-Chloro-3-methylphenol	ND		ug/L	20	EPA 8270
ACMW5W01P	7/11/2003	4-Chloroaniline	ND		ug/L	20	EPA 8270
ACMW5W01P	7/11/2003	4-Chlorophenylphenyl ether	ND		ug/L	10	EPA 8270
ACMW5W01P	7/11/2003	4-Methylphenol	ND		ug/L	10	EPA 8270
ACMW5W01P	7/11/2003	4-Nitroaniline	ND	UJ	ug/L	50	EPA 8270
ACMW5W01P	7/11/2003	4-Nitrophenol	ND		ug/L	50	EPA 8270
ACMW5W01P	7/11/2003	Acenaphthene	ND		ug/L	10	EPA 8270
ACMW5W01P	7/11/2003	Acenaphthylene	ND		ug/L	10	EPA 8270
ACMW5W01P	7/11/2003	Anthracene	ND		ug/L	10	EPA 8270
ACMW5W01P	7/11/2003	Benzo(a)anthracene	ND		ug/L	10	EPA 8270
ACMW5W01P	7/11/2003	Benzo(a)pyrene	ND		ug/L	10	EPA 8270
ACMW5W01P	7/11/2003	Benzo(b)fluoranthene	ND	UJ	ug/L	10	EPA 8270
ACMW5W01P	7/11/2003	Benzo(g,h,i)perylene	ND		ug/L	10	EPA 8270
ACMW5W01P	7/11/2003	Benzo(k)fluoranthene	ND	UJ	ug/L	10	EPA 8270
ACMW5W01P	7/11/2003	Benzoic acid	ND		ug/L	50	EPA 8270
ACMW5W01P	7/11/2003	Benzyl alcohol	ND		ug/L	20	EPA 8270
ACMW5W01P	7/11/2003	Bis(2-chloroethoxy)methane	ND		ug/L	10	EPA 8270
ACMW5W01P	7/11/2003	bis(2-Chloroethyl) ether	ND		ug/L	10	EPA 8270
ACMW5W01P	7/11/2003	Bis(2-chloroisopropyl) ether	ND		ug/L	10	EPA 8270
ACMW5W01P	7/11/2003	Bis(2-ethylhexyl)phthalate	ND		ug/L	10	EPA 8270
ACMW5W01P	7/11/2003	Butylbenzylphthalate	ND	UJ	ug/L	10	EPA 8270
ACMW5W01P	7/11/2003	Chrysene	ND		ug/L	10	EPA 8270
ACMW5W01P	7/11/2003	Dibenz(a,h)anthracene	ND		ug/L	10	EPA 8270
ACMW5W01P	7/11/2003	Dibenzofuran	ND		ug/L	10	EPA 8270
ACMW5W01P	7/11/2003	Diethylphthalate	ND		ug/L	10	EPA 8270
ACMW5W01P	7/11/2003	Dimethylphthalate	ND		ug/L	10	EPA 8270
ACMW5W01P	7/11/2003	Di-n-butylphthalate	ND		ug/L	10	EPA 8270
ACMW5W01P	7/11/2003	Di-n-octylphthalate	ND		ug/L	10	EPA 8270
ACMW5W01P	7/11/2003	Fluoranthene	ND		ug/L	10	EPA 8270
ACMW5W01P	7/11/2003	Fluorene	ND		ug/L	10	EPA 8270
ACMW5W01P	7/11/2003	Hexachloro-1,3-butadiene	ND		ug/L	10	EPA 8270
ACMW5W01P	7/11/2003	Hexachlorobenzene	ND		ug/L	10	EPA 8270
ACMW5W01P	7/11/2003	Hexachlorocyclopentadiene	ND		ug/L	10	EPA 8270
ACMW5W01P	7/11/2003	Hexachloroethane	ND		ug/L	10	EPA 8270
ACMW5W01P	7/11/2003	Indeno(1,2,3-cd)pyrene	ND		ug/L	10	EPA 8270
ACMW5W01P	7/11/2003	Isophorone	ND		ug/L	10	EPA 8270
ACMW5W01P	7/11/2003	Naphthalene	ND		ug/L	10	EPA 8270
ACMW5W01P	7/11/2003	Nitrobenzene	ND		ug/L	10	EPA 8270

APPENDIX F
GROUND WATER ANALYTICAL RESULTS
Remedial Investigation Report
Arkansas City MGP Site

Sample Location	Date	Parameter	Conc.		Units	PQL	Method
ACMW5W01P	7/11/2003	N-Nitroso-di-n-propylamine	ND		ug/L	10	EPA 8270
ACMW5W01P	7/11/2003	N-Nitrosodiphenylamine	ND		ug/L	10	EPA 8270
ACMW5W01P	7/11/2003	Pentachlorophenol	ND		ug/L	50	EPA 8270
ACMW5W01P	7/11/2003	Phenanthrene	ND		ug/L	10	EPA 8270
ACMW5W01P	7/11/2003	Phenol	ND		ug/L	10	EPA 8270
ACMW5W01P	7/11/2003	Pyrene	ND		ug/L	10	EPA 8270
ACMW5W01P	7/11/2003	Cyanide, total	670		ug/L	50	EPA 335.3
ACMW5W01P	7/11/2003	Arsenic	13.3	J	ug/L	10	EPA 6010
ACMW5W01P	7/11/2003	Barium	49.7	J	ug/L	10	EPA 6010
ACMW5W01P	7/11/2003	Cadmium	ND		ug/L	5	EPA 6010
ACMW5W01P	7/11/2003	Chromium	ND		ug/L	5	EPA 6010
ACMW5W01P	7/11/2003	Lead	ND		ug/L	5	EPA 6010
ACMW5W01P	7/11/2003	Selenium	ND		ug/L	75	EPA 6010
ACMW5W01P	7/11/2003	Silver	ND		ug/L	7	EPA 6010
ACMW5W01P	7/11/2003	Mercury	ND		ug/L	0.2	EPA 7470
ACMW5W01D	7/11/2003	1,1,1,2-Tetrachloroethane	ND		ug/L	1	EPA 8260
ACMW5W01D	7/11/2003	1,1,1-Trichloroethane	ND		ug/L	1	EPA 8260
ACMW5W01D	7/11/2003	1,1,2,2-Tetrachloroethane	ND		ug/L	1	EPA 8260
ACMW5W01D	7/11/2003	1,1,2-Trichloroethane	ND		ug/L	1	EPA 8260
ACMW5W01D	7/11/2003	1,1-Dichloroethane	ND		ug/L	1	EPA 8260
ACMW5W01D	7/11/2003	1,1-Dichloroethene	ND		ug/L	1	EPA 8260
ACMW5W01D	7/11/2003	1,1-Dichloropropene	ND		ug/L	1	EPA 8260
ACMW5W01D	7/11/2003	1,2,3-Trichlorobenzene	ND		ug/L	1	EPA 8260
ACMW5W01D	7/11/2003	1,2,3-Trichloropropane	ND		ug/L	2.5	EPA 8260
ACMW5W01D	7/11/2003	1,2,4-Trichlorobenzene	ND		ug/L	1	EPA 8260
ACMW5W01D	7/11/2003	1,2,4-Trimethylbenzene	ND		ug/L	1	EPA 8260
ACMW5W01D	7/11/2003	1,2-Dibromo-3-chloropropane	ND		ug/L	2.5	EPA 8260
ACMW5W01D	7/11/2003	1,2-Dibromoethane (EDB)	ND		ug/L	1	EPA 8260
ACMW5W01D	7/11/2003	1,2-Dichlorobenzene	ND		ug/L	1	EPA 8260
ACMW5W01D	7/11/2003	1,2-Dichloroethane	ND		ug/L	1	EPA 8260
ACMW5W01D	7/11/2003	1,2-Dichloropropane	ND		ug/L	1	EPA 8260
ACMW5W01D	7/11/2003	1,3,5-Trimethylbenzene	ND		ug/L	1	EPA 8260
ACMW5W01D	7/11/2003	1,3-Dichlorobenzene	ND		ug/L	1	EPA 8260
ACMW5W01D	7/11/2003	1,3-Dichloropropane	ND		ug/L	1	EPA 8260
ACMW5W01D	7/11/2003	1,4-Dichlorobenzene	ND		ug/L	1	EPA 8260
ACMW5W01D	7/11/2003	2,2-Dichloropropane	ND		ug/L	1	EPA 8260
ACMW5W01D	7/11/2003	2-Chloroethylvinyl ether	ND		ug/L	10	EPA 8260
ACMW5W01D	7/11/2003	2-Chlorotoluene	ND		ug/L	1	EPA 8260
ACMW5W01D	7/11/2003	2-Hexanone	ND	UJ	ug/L	10	EPA 8260
ACMW5W01D	7/11/2003	4-Chlorotoluene	ND		ug/L	1	EPA 8260
ACMW5W01D	7/11/2003	4-Methyl-2-pentanone (MIBK)	ND	UJ	ug/L	10	EPA 8260
ACMW5W01D	7/11/2003	Acetone	ND		ug/L	10	EPA 8260
ACMW5W01D	7/11/2003	Benzene	ND		ug/L	1	EPA 8260
ACMW5W01D	7/11/2003	Bromobenzene	ND		ug/L	1	EPA 8260
ACMW5W01D	7/11/2003	Bromochloromethane	ND		ug/L	1	EPA 8260

APPENDIX F
GROUND WATER ANALYTICAL RESULTS
Remedial Investigation Report
Arkansas City MGP Site

Sample Location	Date	Parameter	Conc.		Units	PQL	Method
ACMW5W01D	7/11/2003	Bromodichloromethane	ND		ug/L	1	EPA 8260
ACMW5W01D	7/11/2003	Bromoform	ND		ug/L	1	EPA 8260
ACMW5W01D	7/11/2003	Bromomethane	ND		ug/L	1	EPA 8260
ACMW5W01D	7/11/2003	2-Butanone (MEK)	ND	UJ	ug/L	10	EPA 8260
ACMW5W01D	7/11/2003	Carbon tetrachloride	ND		ug/L	1	EPA 8260
ACMW5W01D	7/11/2003	Chlorobenzene	ND		ug/L	1	EPA 8260
ACMW5W01D	7/11/2003	Chloroethane	ND		ug/L	1	EPA 8260
ACMW5W01D	7/11/2003	Chloroform	ND		ug/L	1	EPA 8260
ACMW5W01D	7/11/2003	Chloromethane	ND		ug/L	1	EPA 8260
ACMW5W01D	7/11/2003	cis-1,2-Dichloroethene	ND		ug/L	1	EPA 8260
ACMW5W01D	7/11/2003	cis-1,3-Dichloropropene	ND		ug/L	1	EPA 8260
ACMW5W01D	7/11/2003	Dibromochloromethane	ND		ug/L	1	EPA 8260
ACMW5W01D	7/11/2003	Dibromomethane	ND		ug/L	1	EPA 8260
ACMW5W01D	7/11/2003	Dichlorodifluoromethane	ND		ug/L	1	EPA 8260
ACMW5W01D	7/11/2003	Ethylbenzene	ND		ug/L	1	EPA 8260
ACMW5W01D	7/11/2003	Hexachloro-1,3-butadiene	ND		ug/L	1	EPA 8260
ACMW5W01D	7/11/2003	Isopropylbenzene	ND		ug/L	1	EPA 8260
ACMW5W01D	7/11/2003	m/p-xylene	ND		ug/L	1.3	EPA 8260
ACMW5W01D	7/11/2003	Methyl tert-butyl ether	ND		ug/L	1	EPA 8260
ACMW5W01D	7/11/2003	Methylene chloride	ND	UJ	ug/L	1	EPA 8260
ACMW5W01D	7/11/2003	Naphthalene	10		ug/L	1	EPA 8260
ACMW5W01D	7/11/2003	n-Butylbenzene	ND		ug/L	1	EPA 8260
ACMW5W01D	7/11/2003	n-Propylbenzene	ND		ug/L	1	EPA 8260
ACMW5W01D	7/11/2003	o-Xylene	ND		ug/L	1.1	EPA 8260
ACMW5W01D	7/11/2003	p-Isopropyltoluene	ND		ug/L	1	EPA 8260
ACMW5W01D	7/11/2003	sec-Butylbenzene	ND		ug/L	1	EPA 8260
ACMW5W01D	7/11/2003	Styrene	ND		ug/L	1	EPA 8260
ACMW5W01D	7/11/2003	tert-Butylbenzene	ND		ug/L	1	EPA 8260
ACMW5W01D	7/11/2003	Tetrachloroethene	ND		ug/L	1	EPA 8260
ACMW5W01D	7/11/2003	Toluene	ND		ug/L	1	EPA 8260
ACMW5W01D	7/11/2003	trans-1,2-Dichloroethene	ND		ug/L	1	EPA 8260
ACMW5W01D	7/11/2003	trans-1,3-Dichloropropene	ND		ug/L	1	EPA 8260
ACMW5W01D	7/11/2003	Trichloroethene	ND		ug/L	1	EPA 8260
ACMW5W01D	7/11/2003	Trichlorofluoromethane	ND		ug/L	1	EPA 8260
ACMW5W01D	7/11/2003	Vinyl chloride	ND		ug/L	1	EPA 8260
ACMW5W01D	7/11/2003	1,2,4-Trichlorobenzene	ND		ug/L	10	EPA 8270
ACMW5W01D	7/11/2003	1,2-Dichlorobenzene	ND		ug/L	10	EPA 8270
ACMW5W01D	7/11/2003	1,3-Dichlorobenzene	ND		ug/L	10	EPA 8270
ACMW5W01D	7/11/2003	1,4-Dichlorobenzene	ND		ug/L	10	EPA 8270
ACMW5W01D	7/11/2003	1-Bromo-4-phenoxybenzene	ND		ug/L	10	EPA 8270
ACMW5W01D	7/11/2003	2,4,5-Trichlorophenol	ND		ug/L	50	EPA 8270
ACMW5W01D	7/11/2003	2,4,6-Trichlorophenol	ND		ug/L	10	EPA 8270
ACMW5W01D	7/11/2003	2,4-Dichlorophenol	ND		ug/L	10	EPA 8270
ACMW5W01D	7/11/2003	2,4-Dimethylphenol	ND		ug/L	10	EPA 8270
ACMW5W01D	7/11/2003	2,4-Dinitrophenol	ND		ug/L	50	EPA 8270

APPENDIX F
GROUND WATER ANALYTICAL RESULTS
Remedial Investigation Report
Arkansas City MGP Site

Sample Location	Date	Parameter	Conc.		Units	PQL	Method
ACMW5W01D	7/11/2003	2,4-Dinitrotoluene	ND		ug/L	10	EPA 8270
ACMW5W01D	7/11/2003	2,6-Dinitrotoluene	ND		ug/L	10	EPA 8270
ACMW5W01D	7/11/2003	2-Chloronaphthalene	ND		ug/L	10	EPA 8270
ACMW5W01D	7/11/2003	2-Chlorophenol	ND		ug/L	10	EPA 8270
ACMW5W01D	7/11/2003	2-Methylnaphthalene	ND		ug/L	10	EPA 8270
ACMW5W01D	7/11/2003	2-Methylphenol (o-cresol)	ND		ug/L	10	EPA 8270
ACMW5W01D	7/11/2003	2-Nitroaniline	ND		ug/L	50	EPA 8270
ACMW5W01D	7/11/2003	2-Nitrophenol	ND		ug/L	10	EPA 8270
ACMW5W01D	7/11/2003	3,3'-Dichlorobenzidine	ND	UJ	ug/L	20	EPA 8270
ACMW5W01D	7/11/2003	3-Nitroaniline	ND		ug/L	50	EPA 8270
ACMW5W01D	7/11/2003	4,6-Dinitro-2-methylphenol	ND		ug/L	50	EPA 8270
ACMW5W01D	7/11/2003	4-Chloro-3-methylphenol	ND		ug/L	20	EPA 8270
ACMW5W01D	7/11/2003	4-Chloroaniline	ND		ug/L	20	EPA 8270
ACMW5W01D	7/11/2003	4-Chlorophenylphenyl ether	ND		ug/L	10	EPA 8270
ACMW5W01D	7/11/2003	4-Methylphenol	ND		ug/L	10	EPA 8270
ACMW5W01D	7/11/2003	4-Nitroaniline	ND	UJ	ug/L	50	EPA 8270
ACMW5W01D	7/11/2003	4-Nitrophenol	ND		ug/L	50	EPA 8270
ACMW5W01D	7/11/2003	Acenaphthene	ND		ug/L	10	EPA 8270
ACMW5W01D	7/11/2003	Acenaphthylene	ND		ug/L	10	EPA 8270
ACMW5W01D	7/11/2003	Anthracene	ND		ug/L	10	EPA 8270
ACMW5W01D	7/11/2003	Benzo(a)anthracene	ND		ug/L	10	EPA 8270
ACMW5W01D	7/11/2003	Benzo(a)pyrene	ND		ug/L	10	EPA 8270
ACMW5W01D	7/11/2003	Benzo(b)fluoranthene	ND	UJ	ug/L	10	EPA 8270
ACMW5W01D	7/11/2003	Benzo(g,h,i)perylene	ND		ug/L	10	EPA 8270
ACMW5W01D	7/11/2003	Benzo(k)fluoranthene	ND	UJ	ug/L	10	EPA 8270
ACMW5W01D	7/11/2003	Benzoic acid	ND		ug/L	50	EPA 8270
ACMW5W01D	7/11/2003	Benzyl alcohol	ND		ug/L	20	EPA 8270
ACMW5W01D	7/11/2003	Bis(2-chloroethoxy)methane	ND		ug/L	10	EPA 8270
ACMW5W01D	7/11/2003	bis(2-Chloroethyl) ether	ND		ug/L	10	EPA 8270
ACMW5W01D	7/11/2003	Bis(2-chloroisopropyl) ether	ND		ug/L	10	EPA 8270
ACMW5W01D	7/11/2003	Bis(2-ethylhexyl)phthalate	ND		ug/L	10	EPA 8270
ACMW5W01D	7/11/2003	Butylbenzylphthalate	ND	UJ	ug/L	10	EPA 8270
ACMW5W01D	7/11/2003	Chrysene	ND		ug/L	10	EPA 8270
ACMW5W01D	7/11/2003	Dibenz(a,h)anthracene	ND		ug/L	10	EPA 8270
ACMW5W01D	7/11/2003	Dibenzofuran	ND		ug/L	10	EPA 8270
ACMW5W01D	7/11/2003	Diethylphthalate	ND		ug/L	10	EPA 8270
ACMW5W01D	7/11/2003	Dimethylphthalate	ND		ug/L	10	EPA 8270
ACMW5W01D	7/11/2003	Di-n-butylphthalate	ND		ug/L	10	EPA 8270
ACMW5W01D	7/11/2003	Di-n-octylphthalate	ND		ug/L	10	EPA 8270
ACMW5W01D	7/11/2003	Fluoranthene	ND		ug/L	10	EPA 8270
ACMW5W01D	7/11/2003	Fluorene	ND		ug/L	10	EPA 8270
ACMW5W01D	7/11/2003	Hexachloro-1,3-butadiene	ND		ug/L	10	EPA 8270
ACMW5W01D	7/11/2003	Hexachlorobenzene	ND		ug/L	10	EPA 8270
ACMW5W01D	7/11/2003	Hexachlorocyclopentadiene	ND		ug/L	10	EPA 8270
ACMW5W01D	7/11/2003	Hexachloroethane	ND		ug/L	10	EPA 8270

APPENDIX F
GROUND WATER ANALYTICAL RESULTS
Remedial Investigation Report
Arkansas City MGP Site

Sample Location	Date	Parameter	Conc.		Units	PQL	Method
ACMW5W01D	7/11/2003	Indeno(1,2,3-cd)pyrene	ND		ug/L	10	EPA 8270
ACMW5W01D	7/11/2003	Isophorone	ND		ug/L	10	EPA 8270
ACMW5W01D	7/11/2003	Naphthalene	ND		ug/L	10	EPA 8270
ACMW5W01D	7/11/2003	Nitrobenzene	ND		ug/L	10	EPA 8270
ACMW5W01D	7/11/2003	N-Nitroso-di-n-propylamine	ND		ug/L	10	EPA 8270
ACMW5W01D	7/11/2003	N-Nitrosodiphenylamine	ND		ug/L	10	EPA 8270
ACMW5W01D	7/11/2003	Pentachlorophenol	ND		ug/L	50	EPA 8270
ACMW5W01D	7/11/2003	Phenanthrene	ND		ug/L	10	EPA 8270
ACMW5W01D	7/11/2003	Phenol	ND		ug/L	10	EPA 8270
ACMW5W01D	7/11/2003	Pyrene	ND		ug/L	10	EPA 8270
ACMW5W01D	7/11/2003	Cyanide, total	650		ug/L	50	EPA 335.3
ACMW5W01D	7/11/2003	Arsenic	ND		ug/L	10	EPA 6010
ACMW5W01D	7/11/2003	Barium	48.3	J	ug/L	10	EPA 6010
ACMW5W01D	7/11/2003	Cadmium	ND		ug/L	5	EPA 6010
ACMW5W01D	7/11/2003	Chromium	ND		ug/L	5	EPA 6010
ACMW5W01D	7/11/2003	Lead	ND		ug/L	5	EPA 6010
ACMW5W01D	7/11/2003	Selenium	ND		ug/L	75	EPA 6010
ACMW5W01D	7/11/2003	Silver	ND		ug/L	7	EPA 6010
ACMW5W01D	7/11/2003	Mercury	ND		ug/L	0.2	EPA 7470
TRIP BLANK 1	7/11/2003	Acetone	ND		ug/l	10	EPA 8260
TRIP BLANK 1	7/11/2003	Benzene	ND		ug/l	1	EPA 8260
TRIP BLANK 1	7/11/2003	Bromobenzene	ND		ug/l	1	EPA 8260
TRIP BLANK 1	7/11/2003	Bromochloromethane	ND		ug/l	1	EPA 8260
TRIP BLANK 1	7/11/2003	Bromodichloromethane	ND		ug/l	1	EPA 8260
TRIP BLANK 1	7/11/2003	Bromoform	ND		ug/l	1	EPA 8260
TRIP BLANK 1	7/11/2003	Bromomethane	ND		ug/l	1	EPA 8260
TRIP BLANK 1	7/11/2003	2-Butanone (MEK)	ND		ug/l	10	EPA 8260
TRIP BLANK 1	7/11/2003	n-Butylbenzene	ND		ug/l	1	EPA 8260
TRIP BLANK 1	7/11/2003	sec-Butylbenzene	ND		ug/l	1	EPA 8260
TRIP BLANK 1	7/11/2003	Carbon tetrachloride	ND		ug/l	1	EPA 8260
TRIP BLANK 1	7/11/2003	Chlorobenzene	ND		ug/l	1	EPA 8260
TRIP BLANK 1	7/11/2003	Chloroethane	ND		ug/l	1	EPA 8260
TRIP BLANK 1	7/11/2003	2-Chloroethylvinyl ether	ND		ug/l	10	EPA 8260
TRIP BLANK 1	7/11/2003	Chloroform	ND		ug/l	1	EPA 8260
TRIP BLANK 1	7/11/2003	Chloromethane	ND		ug/l	1	EPA 8260
TRIP BLANK 1	7/11/2003	2-Chlorotoluene	ND		ug/l	1	EPA 8260
TRIP BLANK 1	7/11/2003	4-Chlorotoluene	ND		ug/l	1	EPA 8260
TRIP BLANK 1	7/11/2003	1,2-Dibromo-3-chloropropane	ND		ug/l	2.5	EPA 8260
TRIP BLANK 1	7/11/2003	Dibromochloromethane	ND		ug/l	1	EPA 8260
TRIP BLANK 1	7/11/2003	1,2-Dibromoethane (EDB)	ND		ug/l	1	EPA 8260
TRIP BLANK 1	7/11/2003	Dibromomethane	ND		ug/l	1	EPA 8260
TRIP BLANK 1	7/11/2003	1,2-Dichlorobenzene	ND		ug/l	1	EPA 8260
TRIP BLANK 1	7/11/2003	1,3-Dichlorobenzene	ND		ug/l	1	EPA 8260
TRIP BLANK 1	7/11/2003	1,4-Dichlorobenzene	ND		ug/l	1	EPA 8260
TRIP BLANK 1	7/11/2003	Dichlorodifluoromethane	ND		ug/l	1	EPA 8260

APPENDIX F
GROUND WATER ANALYTICAL RESULTS
Remedial Investigation Report
Arkansas City MGP Site

Sample Location	Date	Parameter	Conc.	Units	PQL	Method
TRIP BLANK 1	7/11/2003	1,1-Dichloroethane	ND	ug/l	1	EPA 8260
TRIP BLANK 1	7/11/2003	1,2-Dichloroethane	ND	ug/l	1	EPA 8260
TRIP BLANK 1	7/11/2003	1,1-Dichloroethene	ND	ug/l	1	EPA 8260
TRIP BLANK 1	7/11/2003	cis-1,2-Dichloroethene	ND	ug/l	1	EPA 8260
TRIP BLANK 1	7/11/2003	trans-1,2-Dichloroethene	ND	ug/l	1	EPA 8260
TRIP BLANK 1	7/11/2003	1,2-Dichloropropane	ND	ug/l	1	EPA 8260
TRIP BLANK 1	7/11/2003	1,3-Dichloropropane	ND	ug/l	1	EPA 8260
TRIP BLANK 1	7/11/2003	2,2-Dichloropropane	ND	ug/l	1	EPA 8260
TRIP BLANK 1	7/11/2003	1,1-Dichloropropene	ND	ug/l	1	EPA 8260
TRIP BLANK 1	7/11/2003	cis-1,3-Dichloropropene	ND	ug/l	1	EPA 8260
TRIP BLANK 1	7/11/2003	trans-1,3-Dichloropropene	ND	ug/l	1	EPA 8260
TRIP BLANK 1	7/11/2003	Ethylbenzene	ND	ug/l	1	EPA 8260
TRIP BLANK 1	7/11/2003	Hexachloro-1,3-butadiene	ND	ug/l	1	EPA 8260
TRIP BLANK 1	7/11/2003	2-Hexanone	ND	ug/l	10	EPA 8260
TRIP BLANK 1	7/11/2003	Isopropylbenzene (Cumene)	ND	ug/l	1	EPA 8260
TRIP BLANK 1	7/11/2003	p-Isopropyltoluene	ND	ug/l	1	EPA 8260
TRIP BLANK 1	7/11/2003	Methylene chloride	ND	ug/l	1	EPA 8260
TRIP BLANK 1	7/11/2003	4-Methyl-2-pentanone (MIBK)	ND	ug/l	10	EPA 8260
TRIP BLANK 1	7/11/2003	Methyl-tert-butyl ether	ND	ug/l	1	EPA 8260
TRIP BLANK 1	7/11/2003	Naphthalene	ND	ug/l	1	EPA 8260
TRIP BLANK 1	7/11/2003	o-Xylene	ND	ug/l	1.1	EPA 8260
TRIP BLANK 1	7/11/2003	n-Propylbenzene	ND	ug/l	1	EPA 8260
TRIP BLANK 1	7/11/2003	Styrene	ND	ug/l	1	EPA 8260
TRIP BLANK 1	7/11/2003	tert-Butylbenzene	ND	ug/l	1	EPA 8260
TRIP BLANK 1	7/11/2003	1,1,1,2-Tetrachloroethane	ND	ug/l	1	EPA 8260
TRIP BLANK 1	7/11/2003	1,1,2,2-Tetrachloroethane	ND	ug/l	1	EPA 8260
TRIP BLANK 1	7/11/2003	Tetrachloroethene	ND	ug/l	1	EPA 8260
TRIP BLANK 1	7/11/2003	Toluene	ND	ug/l	1	EPA 8260
TRIP BLANK 1	7/11/2003	1,2,3-Trichlorobenzene	ND	ug/l	1	EPA 8260
TRIP BLANK 1	7/11/2003	1,2,4-Trichlorobenzene	ND	ug/l	1	EPA 8260
TRIP BLANK 1	7/11/2003	1,1,1-Trichloroethane	ND	ug/l	1	EPA 8260
TRIP BLANK 1	7/11/2003	1,1,2-Trichloroethane	ND	ug/l	1	EPA 8260
TRIP BLANK 1	7/11/2003	Trichloroethene	ND	ug/l	1	EPA 8260
TRIP BLANK 1	7/11/2003	Trichlorofluoromethane	ND	ug/l	1	EPA 8260
TRIP BLANK 1	7/11/2003	1,2,3-Trichloropropane	ND	ug/l	2.5	EPA 8260
TRIP BLANK 1	7/11/2003	1,2,4-Trimethylbenzene	ND	ug/l	1	EPA 8260
TRIP BLANK 1	7/11/2003	1,3,5-Trimethylbenzene	ND	ug/l	1	EPA 8260
TRIP BLANK 1	7/11/2003	Vinyl chloride	ND	ug/l	1	EPA 8260
TRIP BLANK 1	7/11/2003	m&p-Xylene	ND	ug/l	1.3	EPA 8260
TRIP BLANK 2	7/15/2003	Acetone	ND	ug/l	10	EPA 8260
TRIP BLANK 2	7/15/2003	Benzene	ND	ug/l	1	EPA 8260
TRIP BLANK 2	7/15/2003	Bromobenzene	ND	ug/l	1	EPA 8260
TRIP BLANK 2	7/15/2003	Bromochloromethane	ND	ug/l	1	EPA 8260
TRIP BLANK 2	7/15/2003	Bromodichloromethane	ND	ug/l	1	EPA 8260
TRIP BLANK 2	7/15/2003	Bromoform	ND	ug/l	1	EPA 8260

APPENDIX F
GROUND WATER ANALYTICAL RESULTS
Remedial Investigation Report
Arkansas City MGP Site

Sample Location	Date	Parameter	Conc.	Units	PQL	Method
TRIP BLANK 2	7/15/2003	Bromomethane	ND	ug/l	1	EPA 8260
TRIP BLANK 2	7/15/2003	2-Butanone (MEK)	ND	ug/l	10	EPA 8260
TRIP BLANK 2	7/15/2003	n-Butylbenzene	ND	ug/l	1	EPA 8260
TRIP BLANK 2	7/15/2003	sec-Butylbenzene	ND	ug/l	1	EPA 8260
TRIP BLANK 2	7/15/2003	Carbon tetrachloride	ND	ug/l	1	EPA 8260
TRIP BLANK 2	7/15/2003	Chlorobenzene	ND	ug/l	1	EPA 8260
TRIP BLANK 2	7/15/2003	Chloroethane	ND	ug/l	1	EPA 8260
TRIP BLANK 2	7/15/2003	2-Chloroethylvinyl ether	ND	ug/l	10	EPA 8260
TRIP BLANK 2	7/15/2003	Chloroform	ND	ug/l	1	EPA 8260
TRIP BLANK 2	7/15/2003	Chloromethane	ND	ug/l	1	EPA 8260
TRIP BLANK 2	7/15/2003	2-Chlorotoluene	ND	ug/l	1	EPA 8260
TRIP BLANK 2	7/15/2003	4-Chlorotoluene	ND	ug/l	1	EPA 8260
TRIP BLANK 2	7/15/2003	1,2-Dibromo-3-chloropropane	ND	ug/l	2.5	EPA 8260
TRIP BLANK 2	7/15/2003	Dibromochloromethane	ND	ug/l	1	EPA 8260
TRIP BLANK 2	7/15/2003	1,2-Dibromoethane (EDB)	ND	ug/l	1	EPA 8260
TRIP BLANK 2	7/15/2003	Dibromomethane	ND	ug/l	1	EPA 8260
TRIP BLANK 2	7/15/2003	1,2-Dichlorobenzene	ND	ug/l	1	EPA 8260
TRIP BLANK 2	7/15/2003	1,3-Dichlorobenzene	ND	ug/l	1	EPA 8260
TRIP BLANK 2	7/15/2003	1,4-Dichlorobenzene	ND	ug/l	1	EPA 8260
TRIP BLANK 2	7/15/2003	Dichlorodifluoromethane	ND	ug/l	1	EPA 8260
TRIP BLANK 2	7/15/2003	1,1-Dichloroethane	ND	ug/l	1	EPA 8260
TRIP BLANK 2	7/15/2003	1,2-Dichloroethane	ND	ug/l	1	EPA 8260
TRIP BLANK 2	7/15/2003	1,1-Dichloroethene	ND	ug/l	1	EPA 8260
TRIP BLANK 2	7/15/2003	cis-1,2-Dichloroethene	ND	ug/l	1	EPA 8260
TRIP BLANK 2	7/15/2003	trans-1,2-Dichloroethene	ND	ug/l	1	EPA 8260
TRIP BLANK 2	7/15/2003	1,2-Dichloropropane	ND	ug/l	1	EPA 8260
TRIP BLANK 2	7/15/2003	1,3-Dichloropropane	ND	ug/l	1	EPA 8260
TRIP BLANK 2	7/15/2003	2,2-Dichloropropane	ND	ug/l	1	EPA 8260
TRIP BLANK 2	7/15/2003	1,1-Dichloropropene	ND	ug/l	1	EPA 8260
TRIP BLANK 2	7/15/2003	cis-1,3-Dichloropropene	ND	ug/l	1	EPA 8260
TRIP BLANK 2	7/15/2003	trans-1,3-Dichloropropene	ND	ug/l	1	EPA 8260
TRIP BLANK 2	7/15/2003	Ethylbenzene	ND	ug/l	1	EPA 8260
TRIP BLANK 2	7/15/2003	Hexachloro-1,3-butadiene	ND	ug/l	1	EPA 8260
TRIP BLANK 2	7/15/2003	2-Hexanone	ND	ug/l	10	EPA 8260
TRIP BLANK 2	7/15/2003	Isopropylbenzene (Cumene)	ND	ug/l	1	EPA 8260
TRIP BLANK 2	7/15/2003	p-Isopropyltoluene	ND	ug/l	1	EPA 8260
TRIP BLANK 2	7/15/2003	Methylene chloride	ND	ug/l	1	EPA 8260
TRIP BLANK 2	7/15/2003	4-Methyl-2-pentanone (MIBK)	ND	ug/l	10	EPA 8260
TRIP BLANK 2	7/15/2003	Methyl-tert-butyl ether	ND	ug/l	1	EPA 8260
TRIP BLANK 2	7/15/2003	Naphthalene	ND	ug/l	1	EPA 8260
TRIP BLANK 2	7/15/2003	o-Xylene	ND	ug/l	1.1	EPA 8260
TRIP BLANK 2	7/15/2003	n-Propylbenzene	ND	ug/l	1	EPA 8260
TRIP BLANK 2	7/15/2003	Styrene	ND	ug/l	1	EPA 8260
TRIP BLANK 2	7/15/2003	tert-Butylbenzene	ND	ug/l	1	EPA 8260
TRIP BLANK 2	7/15/2003	1,1,1,2-Tetrachloroethane	ND	ug/l	1	EPA 8260

APPENDIX F
GROUND WATER ANALYTICAL RESULTS
Remedial Investigation Report
Arkansas City MGP Site

Sample Location	Date	Parameter	Conc.		Units	PQL	Method
TRIP BLANK 2	7/15/2003	1,1,2,2-Tetrachloroethane	ND		ug/l	1	EPA 8260
TRIP BLANK 2	7/15/2003	Tetrachloroethene	ND		ug/l	1	EPA 8260
TRIP BLANK 2	7/15/2003	Toluene	ND		ug/l	1	EPA 8260
TRIP BLANK 2	7/15/2003	1,2,3-Trichlorobenzene	ND		ug/l	1	EPA 8260
TRIP BLANK 2	7/15/2003	1,2,4-Trichlorobenzene	ND		ug/l	1	EPA 8260
TRIP BLANK 2	7/15/2003	1,1,1-Trichloroethane	ND		ug/l	1	EPA 8260
TRIP BLANK 2	7/15/2003	1,1,2-Trichloroethane	ND		ug/l	1	EPA 8260
TRIP BLANK 2	7/15/2003	Trichloroethene	ND		ug/l	1	EPA 8260
TRIP BLANK 2	7/15/2003	Trichlorofluoromethane	ND		ug/l	1	EPA 8260
TRIP BLANK 2	7/15/2003	1,2,3-Trichloropropane	ND		ug/l	2.5	EPA 8260
TRIP BLANK 2	7/15/2003	1,2,4-Trimethylbenzene	ND		ug/l	1	EPA 8260
TRIP BLANK 2	7/15/2003	1,3,5-Trimethylbenzene	ND		ug/l	1	EPA 8260
TRIP BLANK 2	7/15/2003	Vinyl chloride	ND		ug/l	1	EPA 8260
TRIP BLANK 2	7/15/2003	m&p-Xylene	ND		ug/l	1.3	EPA 8260
ACWTDRUMW01P	7/15/2003	Aldrin	ND		ug/l	0.05	EPA 8081A
ACWTDRUMW01P	7/15/2003	alpha-Chlordane	ND		ug/l	0.05	EPA 8081A
ACWTDRUMW01P	7/15/2003	alpha-BHC	ND	UJ	ug/l	0.05	EPA 8081A
ACWTDRUMW01P	7/15/2003	beta-BHC	ND		ug/l	0.05	EPA 8081A
ACWTDRUMW01P	7/15/2003	delta-BHC	ND		ug/l	0.05	EPA 8081A
ACWTDRUMW01P	7/15/2003	gamma-BHC (Lindane)	ND	UJ	ug/l	0.05	EPA 8081A
ACWTDRUMW01P	7/15/2003	Chlordane (Technical)	ND		ug/l	0.2	EPA 8081A
ACWTDRUMW01P	7/15/2003	gamma-Chlordane	ND		ug/l	0.05	EPA 8081A
ACWTDRUMW01P	7/15/2003	4,4'-DDD	ND	UJ	ug/l	0.1	EPA 8081A
ACWTDRUMW01P	7/15/2003	4,4'-DDE	ND		ug/l	0.1	EPA 8081A
ACWTDRUMW01P	7/15/2003	4,4'-DDT	ND	UJ	ug/l	0.1	EPA 8081A
ACWTDRUMW01P	7/15/2003	Dieldrin	ND		ug/l	0.1	EPA 8081A
ACWTDRUMW01P	7/15/2003	Endosulfan I	ND	UJ	ug/l	0.05	EPA 8081A
ACWTDRUMW01P	7/15/2003	Endosulfan II	ND		ug/l	0.1	EPA 8081A
ACWTDRUMW01P	7/15/2003	Endosulfan sulfate	ND		ug/l	0.5	EPA 8081A
ACWTDRUMW01P	7/15/2003	Endrin	ND	UJ	ug/l	0.1	EPA 8081A
ACWTDRUMW01P	7/15/2003	Endrin aldehyde	ND		ug/l	0.1	EPA 8081A
ACWTDRUMW01P	7/15/2003	Endrin ketone	ND		ug/l	0.1	EPA 8081A
ACWTDRUMW01P	7/15/2003	Heptachlor	ND	UJ	ug/l	0.05	EPA 8081A
ACWTDRUMW01P	7/15/2003	Heptachlor epoxide	ND		ug/l	0.05	EPA 8081A
ACWTDRUMW01P	7/15/2003	Methoxychlor	ND		ug/l	0.5	EPA 8081A
ACWTDRUMW01P	7/15/2003	Toxaphene	ND		ug/l	2.5	EPA 8081A
ACWTDRUMW01P	7/15/2003	Acetone	ND		ug/l	10	EPA 8260
ACWTDRUMW01P	7/15/2003	Benzene	ND		ug/l	1	EPA 8260
ACWTDRUMW01P	7/15/2003	Bromobenzene	ND		ug/l	1	EPA 8260
ACWTDRUMW01P	7/15/2003	Bromochloromethane	ND		ug/l	1	EPA 8260
ACWTDRUMW01P	7/15/2003	Bromodichloromethane	ND		ug/l	1	EPA 8260
ACWTDRUMW01P	7/15/2003	Bromoform	ND		ug/l	1	EPA 8260
ACWTDRUMW01P	7/15/2003	Bromomethane	ND		ug/l	1	EPA 8260
ACWTDRUMW01P	7/15/2003	2-Butanone (MEK)	ND		ug/l	10	EPA 8260
ACWTDRUMW01P	7/15/2003	n-Butylbenzene	ND		ug/l	1	EPA 8260

APPENDIX F
GROUND WATER ANALYTICAL RESULTS
Remedial Investigation Report
Arkansas City MGP Site

Sample Location	Date	Parameter	Conc.		Units	PQL	Method
ACWTDRUMW01P	7/15/2003	sec-Butylbenzene	ND		ug/l	1	EPA 8260
ACWTDRUMW01P	7/15/2003	Carbon tetrachloride	ND		ug/l	1	EPA 8260
ACWTDRUMW01P	7/15/2003	Chlorobenzene	ND		ug/l	1	EPA 8260
ACWTDRUMW01P	7/15/2003	Chloroethane	ND	UJ	ug/l	1	EPA 8260
ACWTDRUMW01P	7/15/2003	2-Chloroethylvinyl ether	ND		ug/l	10	EPA 8260
ACWTDRUMW01P	7/15/2003	Chloroform	1.3		ug/l	1	EPA 8260
ACWTDRUMW01P	7/15/2003	Chloromethane	ND		ug/l	1	EPA 8260
ACWTDRUMW01P	7/15/2003	2-Chlorotoluene	ND		ug/l	1	EPA 8260
ACWTDRUMW01P	7/15/2003	4-Chlorotoluene	ND		ug/l	1	EPA 8260
ACWTDRUMW01P	7/15/2003	1,2-Dibromo-3-chloropropane	ND		ug/l	2.5	EPA 8260
ACWTDRUMW01P	7/15/2003	Dibromochloromethane	ND		ug/l	1	EPA 8260
ACWTDRUMW01P	7/15/2003	1,2-Dibromoethane (EDB)	ND		ug/l	1	EPA 8260
ACWTDRUMW01P	7/15/2003	Dibromomethane	ND		ug/l	1	EPA 8260
ACWTDRUMW01P	7/15/2003	1,2-Dichlorobenzene	ND		ug/l	1	EPA 8260
ACWTDRUMW01P	7/15/2003	1,3-Dichlorobenzene	ND		ug/l	1	EPA 8260
ACWTDRUMW01P	7/15/2003	1,4-Dichlorobenzene	ND		ug/l	1	EPA 8260
ACWTDRUMW01P	7/15/2003	Dichlorodifluoromethane	ND		ug/l	1	EPA 8260
ACWTDRUMW01P	7/15/2003	1,1-Dichloroethane	ND		ug/l	1	EPA 8260
ACWTDRUMW01P	7/15/2003	1,2-Dichloroethane	ND		ug/l	1	EPA 8260
ACWTDRUMW01P	7/15/2003	1,1-Dichloroethene	ND		ug/l	1	EPA 8260
ACWTDRUMW01P	7/15/2003	cis-1,2-Dichloroethene	ND		ug/l	1	EPA 8260
ACWTDRUMW01P	7/15/2003	trans-1,2-Dichloroethene	ND		ug/l	1	EPA 8260
ACWTDRUMW01P	7/15/2003	1,2-Dichloropropane	ND		ug/l	1	EPA 8260
ACWTDRUMW01P	7/15/2003	1,3-Dichloropropane	ND		ug/l	1	EPA 8260
ACWTDRUMW01P	7/15/2003	2,2-Dichloropropane	ND		ug/l	1	EPA 8260
ACWTDRUMW01P	7/15/2003	1,1-Dichloropropene	ND		ug/l	1	EPA 8260
ACWTDRUMW01P	7/15/2003	cis-1,3-Dichloropropene	ND		ug/l	1	EPA 8260
ACWTDRUMW01P	7/15/2003	trans-1,3-Dichloropropene	ND		ug/l	1	EPA 8260
ACWTDRUMW01P	7/15/2003	Ethylbenzene	ND		ug/l	1	EPA 8260
ACWTDRUMW01P	7/15/2003	Hexachloro-1,3-butadiene	ND		ug/l	1	EPA 8260
ACWTDRUMW01P	7/15/2003	2-Hexanone	ND	UJ	ug/l	10	EPA 8260
ACWTDRUMW01P	7/15/2003	Isopropylbenzene (Cumene)	ND		ug/l	1	EPA 8260
ACWTDRUMW01P	7/15/2003	p-Isopropyltoluene	ND		ug/l	1	EPA 8260
ACWTDRUMW01P	7/15/2003	Methylene chloride	ND	UJ	ug/l	1	EPA 8260
ACWTDRUMW01P	7/15/2003	4-Methyl-2-pentanone (MIBK)	ND	UJ	ug/l	10	EPA 8260
ACWTDRUMW01P	7/15/2003	Methyl-tert-butyl ether	ND		ug/l	1	EPA 8260
ACWTDRUMW01P	7/15/2003	Naphthalene	3.1		ug/l	1	EPA 8260
ACWTDRUMW01P	7/15/2003	o-Xylene	1.6		ug/l	1.1	EPA 8260
ACWTDRUMW01P	7/15/2003	n-Propylbenzene	ND		ug/l	1	EPA 8260
ACWTDRUMW01P	7/15/2003	Styrene	ND		ug/l	1	EPA 8260
ACWTDRUMW01P	7/15/2003	tert-Butylbenzene	ND		ug/l	1	EPA 8260
ACWTDRUMW01P	7/15/2003	1,1,1,2-Tetrachloroethane	ND		ug/l	1	EPA 8260
ACWTDRUMW01P	7/15/2003	1,1,2,2-Tetrachloroethane	ND		ug/l	1	EPA 8260
ACWTDRUMW01P	7/15/2003	Tetrachloroethene	ND		ug/l	1	EPA 8260
ACWTDRUMW01P	7/15/2003	Toluene	1.3		ug/l	1	EPA 8260

APPENDIX F
GROUND WATER ANALYTICAL RESULTS
Remedial Investigation Report
Arkansas City MGP Site

Sample Location	Date	Parameter	Conc.		Units	PQL	Method
ACWTDRUMW01P	7/15/2003	1,2,3-Trichlorobenzene	ND		ug/l	1	EPA 8260
ACWTDRUMW01P	7/15/2003	1,2,4-Trichlorobenzene	ND		ug/l	1	EPA 8260
ACWTDRUMW01P	7/15/2003	1,1,1-Trichloroethane	ND		ug/l	1	EPA 8260
ACWTDRUMW01P	7/15/2003	1,1,2-Trichloroethane	ND		ug/l	1	EPA 8260
ACWTDRUMW01P	7/15/2003	Trichloroethene	ND		ug/l	1	EPA 8260
ACWTDRUMW01P	7/15/2003	Trichlorofluoromethane	ND		ug/l	1	EPA 8260
ACWTDRUMW01P	7/15/2003	1,2,3-Trichloropropane	ND		ug/l	2.5	EPA 8260
ACWTDRUMW01P	7/15/2003	1,2,4-Trimethylbenzene	1.4		ug/l	1	EPA 8260
ACWTDRUMW01P	7/15/2003	1,3,5-Trimethylbenzene	1.8		ug/l	1	EPA 8260
ACWTDRUMW01P	7/15/2003	Vinyl chloride	ND		ug/l	1	EPA 8260
ACWTDRUMW01P	7/15/2003	m&p-Xylene	2.2		ug/l	1.3	EPA 8260
ACWTDRUMW01P	7/15/2003	Acenaphthene	ND		ug/l	10	EPA 8270
ACWTDRUMW01P	7/15/2003	Acenaphthylene	ND		ug/l	10	EPA 8270
ACWTDRUMW01P	7/15/2003	Anthracene	ND		ug/l	10	EPA 8270
ACWTDRUMW01P	7/15/2003	Benzo(a)anthracene	ND		ug/l	10	EPA 8270
ACWTDRUMW01P	7/15/2003	Benzo(a)pyrene	ND		ug/l	10	EPA 8270
ACWTDRUMW01P	7/15/2003	Benzo(b)fluoranthene	ND	UJ	ug/l	10	EPA 8270
ACWTDRUMW01P	7/15/2003	Benzo(g,h,i)perylene	ND		ug/l	10	EPA 8270
ACWTDRUMW01P	7/15/2003	Benzo(k)fluoranthene	ND	UJ	ug/l	10	EPA 8270
ACWTDRUMW01P	7/15/2003	Benzoic acid	ND		ug/l	50	EPA 8270
ACWTDRUMW01P	7/15/2003	Benzyl alcohol	ND		ug/l	20	EPA 8270
ACWTDRUMW01P	7/15/2003	4-Bromophenylphenyl ether	ND		ug/l	10	EPA 8270
ACWTDRUMW01P	7/15/2003	Butylbenzylphthalate	ND	UJ	ug/l	10	EPA 8270
ACWTDRUMW01P	7/15/2003	4-Chloro-3-methylphenol	ND		ug/l	20	EPA 8270
ACWTDRUMW01P	7/15/2003	4-Chloroaniline	ND		ug/l	20	EPA 8270
ACWTDRUMW01P	7/15/2003	bis(2-Chloroethoxy)methane	ND		ug/l	10	EPA 8270
ACWTDRUMW01P	7/15/2003	bis(2-Chloroethyl) ether	ND		ug/l	10	EPA 8270
ACWTDRUMW01P	7/15/2003	bis(2-Chloroisopropyl) ether	ND	UJ	ug/l	10	EPA 8270
ACWTDRUMW01P	7/15/2003	1,3-Dichlorobenzene	ND		ug/l	10	EPA 8270
ACWTDRUMW01P	7/15/2003	1,4-Dichlorobenzene	ND		ug/l	10	EPA 8270
ACWTDRUMW01P	7/15/2003	3,3'-Dichlorobenzidine	ND	UJ	ug/l	20	EPA 8270
ACWTDRUMW01P	7/15/2003	2,4-Dichlorophenol	ND		ug/l	10	EPA 8270
ACWTDRUMW01P	7/15/2003	Diethylphthalate	ND		ug/l	10	EPA 8270
ACWTDRUMW01P	7/15/2003	2,4-Dimethylphenol	ND		ug/l	10	EPA 8270
ACWTDRUMW01P	7/15/2003	Dimethylphthalate	ND		ug/l	10	EPA 8270
ACWTDRUMW01P	7/15/2003	Di-n-butylphthalate	ND	UJ	ug/l	10	EPA 8270
ACWTDRUMW01P	7/15/2003	4,6-Dinitro-2-methylphenol	ND		ug/l	50	EPA 8270
ACWTDRUMW01P	7/15/2003	2,4-Dinitrophenol	ND	UJ	ug/l	50	EPA 8270
ACWTDRUMW01P	7/15/2003	2,4-Dinitrotoluene	ND		ug/l	10	EPA 8270
ACWTDRUMW01P	7/15/2003	2,6-Dinitrotoluene	ND		ug/l	10	EPA 8270
ACWTDRUMW01P	7/15/2003	Di-n-octylphthalate	ND		ug/l	10	EPA 8270
ACWTDRUMW01P	7/15/2003	bis(2-Ethylhexyl)phthalate	ND		ug/l	10	EPA 8270
ACWTDRUMW01P	7/15/2003	Fluoranthene	ND	UJ	ug/l	10	EPA 8270
ACWTDRUMW01P	7/15/2003	Fluorene	ND		ug/l	10	EPA 8270
ACWTDRUMW01P	7/15/2003	Hexachloro-1,3-butadiene	ND		ug/l	10	EPA 8270

APPENDIX F
GROUND WATER ANALYTICAL RESULTS
Remedial Investigation Report
Arkansas City MGP Site

Sample Location	Date	Parameter	Conc.		Units	PQL	Method
ACWTDRUMW01P	7/15/2003	Hexachlorobenzene	ND		ug/l	10	EPA 8270
ACWTDRUMW01P	7/15/2003	Hexachlorocyclopentadiene	ND		ug/l	10	EPA 8270
ACWTDRUMW01P	7/15/2003	Hexachloroethane	ND		ug/l	10	EPA 8270
ACWTDRUMW01P	7/15/2003	Indeno(1,2,3-cd)pyrene	ND		ug/l	10	EPA 8270
ACWTDRUMW01P	7/15/2003	Isophorone	ND		ug/l	10	EPA 8270
ACWTDRUMW01P	7/15/2003	2-Methylnaphthalene	ND		ug/l	10	EPA 8270
ACWTDRUMW01P	7/15/2003	2-Methylphenol (o-Cresol)	ND		ug/l	10	EPA 8270
ACWTDRUMW01P	7/15/2003	4-Methylphenol (p-Cresol)	ND		ug/l	10	EPA 8270
ACWTDRUMW01P	7/15/2003	Naphthalene	ND		ug/l	10	EPA 8270
ACWTDRUMW01P	7/15/2003	2-Nitroaniline	ND		ug/l	50	EPA 8270
ACWTDRUMW01P	7/15/2003	3-Nitroaniline	ND	UJ	ug/l	50	EPA 8270
ACWTDRUMW01P	7/15/2003	2-Chloronaphthalene	ND		ug/l	10	EPA 8270
ACWTDRUMW01P	7/15/2003	2-Chlorophenol	ND		ug/l	10	EPA 8270
ACWTDRUMW01P	7/15/2003	4-Chlorophenylphenyl ether	ND		ug/l	10	EPA 8270
ACWTDRUMW01P	7/15/2003	Chrysene	ND		ug/l	10	EPA 8270
ACWTDRUMW01P	7/15/2003	Dibenz(a,h)anthracene	ND		ug/l	10	EPA 8270
ACWTDRUMW01P	7/15/2003	Dibenzofuran	ND		ug/l	10	EPA 8270
ACWTDRUMW01P	7/15/2003	1,2-Dichlorobenzene	ND		ug/l	10	EPA 8270
ACWTDRUMW01P	7/15/2003	4-Nitroaniline	ND	UJ	ug/l	50	EPA 8270
ACWTDRUMW01P	7/15/2003	Nitrobenzene	ND		ug/l	10	EPA 8270
ACWTDRUMW01P	7/15/2003	2-Nitrophenol	ND		ug/l	10	EPA 8270
ACWTDRUMW01P	7/15/2003	4-Nitrophenol	ND		ug/l	50	EPA 8270
ACWTDRUMW01P	7/15/2003	N-Nitroso-di-n-propylamine	ND	UJ	ug/l	10	EPA 8270
ACWTDRUMW01P	7/15/2003	N-Nitrosodiphenylamine	ND	UJ	ug/l	10	EPA 8270
ACWTDRUMW01P	7/15/2003	Pentachlorophenol	ND		ug/l	50	EPA 8270
ACWTDRUMW01P	7/15/2003	Phenanthrene	ND		ug/l	10	EPA 8270
ACWTDRUMW01P	7/15/2003	Phenol	ND		ug/l	10	EPA 8270
ACWTDRUMW01P	7/15/2003	Pyrene	ND		ug/l	10	EPA 8270
ACWTDRUMW01P	7/15/2003	1,2,4-Trichlorobenzene	ND		ug/l	10	EPA 8270
ACWTDRUMW01P	7/15/2003	2,4,5-Trichlorophenol	ND		ug/l	50	EPA 8270
ACWTDRUMW01P	7/15/2003	2,4,6-Trichlorophenol	ND		ug/l	10	EPA 8270
ACWTDRUMW01P	7/15/2003	Arsenic	ND		ug/l	10	EPA 6010
ACWTDRUMW01P	7/15/2003	Barium	84.1		ug/l	10	EPA 6010
ACWTDRUMW01P	7/15/2003	Cadmium	ND		ug/l	5	EPA 6010
ACWTDRUMW01P	7/15/2003	Chromium	ND		ug/l	5	EPA 6010
ACWTDRUMW01P	7/15/2003	Lead	12.9		ug/l	5	EPA 6010
ACWTDRUMW01P	7/15/2003	Selenium	ND		ug/l	15	EPA 6010
ACWTDRUMW01P	7/15/2003	Silver	ND		ug/l	7	EPA 6010
ACWTDRUMW01P	7/15/2003	Mercury	ND		ug/l	0.2	EPA 7470
ACWTDRUMW01P	7/15/2003	Oil and Grease	44		mg/l	5	EPA 1664
ACWTDRUMW01P	7/15/2003	pH	7.78				EPA 150.1
ACWTDRUMW01P	7/15/2003	Total Suspended Solids	ND		mg/l	5	EPA 160.2
ACWTDRUMW01P	7/15/2003	Cyanide	0.0654		mg/l	0.005	EPA 335.3
ACWTDRUMW01P	7/15/2003	BOD, 5 day	3		mg/l	2	EPA 405.1
ACWTDRUMW01P	7/15/2003	Chemical Oxygen Demand	140		mg/l	10	EPA 410.4

APPENDIX G

DATA VALIDATION REPORTS

VALIDATA

Chemical Services, Inc.

4070 Baileycastle Lane, Duluth, GA 30097

DATA VALIDATION SUMMARY
REPORT

COMPANY:	Black & Veatch Construction
SITE NAME:	Westar Energy MGP, Arkansas City, Kansas
CONTRACTED LAB:	Pace Analytical Services, Inc.
PROJECT NUMBER:	65541-2010
PACE SDG NUMBERS:	6072408, 6072415, 6072421
QA/QC LEVEL:	EPA Level IV
EPA SOW/METHOD:	EPA 1990 SOW
VALIDATION GUIDELINES:	*USEPA Contract Laboratory Program National Functional Guidelines for Organic Data Review,* 1999; *USEPA Contract Laboratory Program National Functional Guidelines for* Inorganic Data Review, 1994
SAMPLE MATRICES:	Soil and Water
TYPES OF ANALYSES:	Volatile Organics, Volatile Organics - UST, Semivolatile Organics (SVOA), Pesticides, Polynuclear Aromatic Hydrocarbons (PAH), Total Metals / Cyanide, Reactive Cyanide, Reactive Sulfide, pH, Flashpoint, Biological Oxygen Demand (BOD), Chemical Oxygen Demand (COD), Oil and Grease, Total Suspended Solids (TSS)
SDG NUMBERS:	6072408, 6072415, 6072421

SAMPLES:

SDG NUMBER: 6072408
SAMPLING DATE: July 7, 2003

Client Sample #	Lab Sample #	Matrix	Volatiles	VOA-UST	SVOA
ACMW1S01P	606228609	Soil	X		X
ACMW1S02P	606228658	Soil	X		X
ACMW3S01P	606228468	Soil	X		X
ACMW3S02P	606228476	Soil	X		X
ACMW4S01P	606228583	Soil		X	
ACMW4S02P	606228591	Soil		X	
ACSP5S01P	606228674	Soil		X	
ACSP5S02P	606228682	Soil		X	
ACSP12S01P	606228799	Soil		X	
ACSP12S02P	606228831	Soil		X	
ACSP15S01P	606228856	Soil		X	
ACSP15S02P	606228914	Soil		X	

Client Sample #	Lab Sample #	Matrix	Volatiles	VOA-UST	SVOA
ACSP17S01D	606228708	Soil		X	
ACSP17S01P	606228690	Soil		X	
ACSP17S02P	606228757	Soil		X	
ACSP18S01P	606228773	Soil		X	
ACSP18S02P	606228781	Soil		X	
ACMW4S01PMS	606232429	Soil		X	
ACMW4S01PMSD	606232437	Soil		X	
ACMW3S01PMS	606228468MS	Soil	X		X
ACMW3S01PMSD	606228468MSD	Soil	X		X

Client Sample #	Lab Sample #	Matrix	Pesticides	PAH	Metals/CN*
ACMW1S01P	606228609	Soil	X		X
ACMW1S02P	606228658	Soil	X		X
ACMW3S01P	606228468	Soil	X		X
ACMW3S02P	606228476	Soil	X		X
ACMW3SS1501P	606228450	Soil		X	
ACMW4S01P	606228583	Soil		X	X
ACMW4S02P	606228591	Soil		X	X
ACMW4SS1501P	606228500	Soil		X	
ACSP5S01P	606228674	Soil		X	X
ACSP5S01P2X	6062286742X	Soil			X
ACSP5S02P	606228682	Soil		X	X
ACSP12S01P	606228799	Soil		X	
ACSP12S02P	606228831	Soil		X	
ACSP15S01P	606228856	Soil		X	
ACSP15S02P	606228914	Soil		X	
ACSP17SS1S01P	606228740	Soil		X	
ACSP17S01D	606228708	Soil		X	
ACSP17S01P	606228690	Soil		X	
ACSP17S02P	606228757	Soil		X	
ACSP18S01P	606228773	Soil		X	
ACSP18S01PDL	606228773DL	Soil		X	
ACSP18S02P	606228781	Soil		X	
ACSP18S2PDL	606228781DL	Soil		X	
ACMW4S01PMS	606260487	Soil		X	
ACMW4S01PMSD	606260495	Soil		X	
ACMW3S01PMS	606228468MS	Soil	X		
ACMW3S01PMSD	606228468MSD	Soil	X		

SDG NUMBER: 6072415
SAMPLING DATE: July 8, 2003

Client Sample #	Lab Sample #	Matrix	Volatiles	VOA-UST	SVOA
ACSP9S01P	606229193	Soil	X		X
ACSP9S02P	606229201	Soil	X		X
ACMW2S02P	606229706	Soil		X	
ACSP701D	606231371	Soil		X	

Client Sample #	Lab Sample #	Matrix	Volatiles	VOA-UST	SVOA
ACSP14S01P	606229003	Soil		X	
ACSP14S02P	606229102	Soil		X	
ACSP13S01P	606229151	Soil		X	
ACSP13S02P	606229177	Soil		X	
ACSP8S01P	606229227	Soil		X	
ACSP8S02P	606229235	Soil		X	
ACSP10S01P	606229243	Soil		X	
ACSP10S02P	606229268	Soil		X	
ACSP11S01P	606229284	Soil		X	
ACSP11S02P	606229292	Soil		X	
ACSP7S01P	606229318	Soil		X	
ACSP7S02P	606229326	Soil		X	
ACSP2S01P	606229359	Soil		X	
ACSP2S02P	606229367	Soil		X	
ACSP3S01P	606229375	Soil		X	
ACSP3S02P	606229391	Soil		X	
ACMW2S01P	606229417	Soil		X	
ACMW2S02PMS	606234805	Soil		X	
ACMW2S02PMSD	606234813	Soil		X	
ACMW14S01PMS	606243640	Soil		X	
ACMW14S01PMSD	606243657	Soil		X	

Client Sample #	Lab Sample #	Matrix	Pesticides	Metals / CN*	Reactive CN
ACSP9S01P	606229193	Soil	X	X	
ACSP9S02P	606229201	Soil	X	X	
ACMW2S01P	3X606229417	Soil		X	
ACSP13S01P	606229151	Soil		X	
ACSP13S02P	606229177	Soil		X	
ACSP11S01P	606229284	Soil		X	
ACSP11S02P	606229292	Soil		X	
ACMW2S01P	606229417	Soil		X	
ACMW2S02P	606229706	Soil		X	
ACSP7S01P	606229318	Soil		X[1]	
ACSP7S02P	606229326	Soil		X[1]	
ACSP7S01D	606231371	Soil		X[1]	
ACSP6S01P	606229334	Soil			X
ACSP6S02P	606229342	Soil			X

Client Sample #	Lab Sample #	Matrix	Reactive Sulfide	pH	Flashpoint
ACSP6S01P	606229334	Soil	X	X	X
ACSP6S02P	606229342	Soil	X	X	X
ACSP6S01PMD	606229334MD	Soil		X	

Client Sample #	Lab Sample #	Matrix	PAH
ACMW2S01P	606229417	Soil	X
ACMW2S01PDL	606229417DL	Soil	X

Client Sample #	Lab Sample #	Matrix	PAH
ACMW2S02P	606229706	Soil	X
ACSP2S01P	606229359	Soil	X
ACSP2S01PDL	606229359DL	Soil	X
ACSP2S02P	606229367	Soil	X
ACSP3S01P	606229375	Soil	X
ACSP3S02P	606229391	Soil	X
ACSP7S01D	606231371	Soil	X
ACSP7S01P	606229318	Soil	X
ACSP7S02P	606229326	Soil	X
ACSP8S01P	606229227	Soil	X
ACSP8S02P	606229235	Soil	X
ACSP10S01P	606229243	Soil	X
ACSP10S02P	606229268	Soil	X
ACSP11S01P	606229284	Soil	X
ACSP11S01PDL	606229284DL	Soil	X
ACSP11S02P	606229292	Soil	X
ACSP13S01P	606229151	Soil	X
ACSP13S02P	606229177	Soil	X
ACSP14S01P	606229003	Soil	X
ACSP14S02P	606229102	Soil	X
ACSP6S01P	606229334	Soil	X
ACSP6S02P	606229342	Soil	X
ACSP6S02PDL	606229342DL	Soil	X
ACSP7SS1S01P	606229300	Soil	X
ACSP7SS1S01PDL	606229300DL	Soil	X
ACSP8SS1S01P	606229219	Soil	X
ACSP10S01S01P	606229276	Soil	X
ACSP10S01S01PDL	606229276DL	Soil	X
ACSP8S02PMS	606305183	Soil	X
ACSP8S02PMSD	606305191	Soil	X

SDG NUMBER: 6072421
SAMPLING DATE: July 9-15, 2003

Client Sample #	Lab Sample #	Matrix	Volatiles	VOA-UST	SVOA
ACDRUMS01P	606229870	Soil	X		X
ACDRUMS01PDL	606229780DL	Soil			X
ACMW5W01P	606240729	Water	X		X
ACMW1W01P	606240695	Water	X		X
ACMW2W01P	606240703	Water	X		X
ACMW3W01P	606240711	Water	X		X
ACMW5W01D	606240737	Water	X		X
ACWTDRUMW01P	606245579	Water	X		X
ACWTDRUMW01PDL	606245579DL	Water			X
TRIP BLANK 1	6062470745	Water	X		
TRIP BLANK 2	606245587	Water	X		
ACSP1S01P	606229839	Soil		X	

Client Sample #	Lab Sample #	Matrix	Volatiles	VOA-UST	SVOA
ACSP1S02P	606229854	Soil		X	
ACSP4S01P	606229797	Soil		X	
ACSP4S02P	606229813	Soil		X	
ACSP16S01P	606229755	Soil		X	
ACSP16S02P	606229763	Soil		X	
ACMW3W01PMS	606245538	Water	X		
ACMW3W01PMSD	606245546	Water	X		

Client Sample #	Lab Sample #	Matrix	Pesticides	Metals / CN*	BOD
ACDRUMS01P	606229870	Soil	X	X	
ACMW5W01P	606240729	Water		X	
A MW5W01P	5X606240729	Water		X	
ACMW1W01P	606240695	Water	X	X	
ACMW1W01P	5X606240695	Water		X	
ACMW2W01P	606240703	Water		X	
ACMW3W01P	606240711	Water	X	X	
ACMW3W01P	5X606240711	Water		X	
ACMW5W01D	606240737	Water		X	
ACMW5W01D	5X606240737	Water		X	
ACWTDRUMW01P	606245579	Water	X		X
ACWTDRUMW01PDL	606245579DL	Water			
ACDRUMS01P	606229870	Soil		X	
ACMW3W01PMS	606240711MS	Water	X		
ACMW3W01PMSD	606240711MSD	Water	X		

Client Sample #	Lab Sample #	Matrix	COD	pH	Oil/Grease	TSS
ACWTDRUMW01P	606245579	Water	X	X	X	X
ACWTDRUMW01PMD	606245579MD	Water		X		
ACWTDRUMW01PMS	606245579MS	Water	X			

Client Sample #	Lab Sample #	Matrix	PAH
ACSP1S01P	606229839	Soil	X
ACSP1S02P	606229854	Soil	X
ACSP4S01P	606229797	Soil	X
ACSP4S02P	606229813	Soil	X
ACSP16S01P	606229755	Soil	X
ACSP16S02P	606229763	Soil	X
ACSP16SS1S01P	606229722	Soil	X
ACSP16SS1S01PDL	606229722DL	Soil	X
ACSP16SS1S01PMS	606295616	Soil	X
ACSP16SS1S01PMSD	606295624	Soil	X

[1] = Cyanide only

* Metals analyses were for RECRA metals and cyanide.

Suffix Codes: D = FIELD DUPLICATE, DL = DILUTION, MD = MATRIX DUPLICATE, MS = MATRIX SPIKE, MSD = MATRIX SPIKE DUPLICATE

DATA REVIEWERS: Amy L. Hogan, Jean M. Delashmit

RELEASE SIGNATURE: 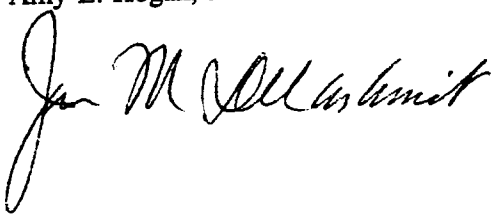

Data Qualifier Definitions

J	-	The associated numerical value is an estimated quantity.
R	-	The data are unusable (the compound/analyte may or may not be present). Resampling and reanalysis are necessary for verification.
U	-	The compound/analyte was analyzed for, but not detected. The associated numerical value is the sample quantitation limit.
UJ	-	The compound/analyte was analyzed for, but not detected. The sample quantitation limit is an estimated quantity.

DATA VALIDATION SUMMARY

Pace Analytical Laboratories, Inc. - 6072408 - Organics and Inorganics

SAMPLES: ACMW1S01P, ACMW1S02P, ACMW3S01P, ACMW3S02P, ACMW3SS1501P, ACMW4S01P, ACMW4S02P, ACMW4SS1501P, ACSP5S01P, ACSP5S02P, ACSP12S01P, ACSP12S02P, ACSP15S01P, ACSP15S02P, ACSP17SS1S01P, ACSP17S01D, ACSP17S01P, ACSP17S02P, ACSP18S01P, ACSP18S02P

VOLATILE ORGANICS

SUMMARY

All laboratory data were acceptable with qualifications.

MAJOR ISSUES

There were no major problems associated with this fraction of the SDG.

MINOR ISSUES

I.) Holding Times:

The 15 days between sampling date and analysis date for samples ACMW1S01P, ACMW1S02P and ACMW3S02P exceeded the 14 day QC limit. All results for these samples, which consisted entirely of non-detects, were flagged as estimated (UJ).

II.) GC / MS Tuning:

All GC / MS Tuning criteria were met. No action was required.

III.) Calibration:

Initial Calibration:

All Initial Calibration criteria were met. No action was required.

Continuing Calibration:

The Percent Differences (%D's) for the standards run on 7/21/03 at 20:23 on instrument HP1 exceeded the 15% QC limit for the following compounds:

chloromethane	15.6%
1,2,3-trichloropropane	15.2%
hexachlorobutadiene	18.3%

All positive and non-detect results for these compounds in the SDG samples, were flagged as estimated (J) and (UJ).

IV.) Blanks:

There were no detections in the method blanks associated with this SDG. No action was required.

Tentatively Identified Compounds (TIC):

TIC data were not submitted for this SDG. No action was required.

V.) Surrogate Recoveries:

All Surrogate Recovery criteria were met. No action was required.

VI.) Laboratory Control Samples (LCS):

One LCS sample was analyzed by the laboratory. All LCS Recovery criteria were met. No action was required.

VII.) Matrix Spike / Matrix Spike Duplicate (MS / MSD):

MS / MSD analyses data were performed on SDG sample ACMW3S01P. All MS / MSD criteria were met. No action was required.

VIII.) Field Duplicates:

There were no field duplicate samples identified in this fraction of the SDG. No action was required.

IX.) Internal Standards Performance (ISTD):

All ISTD criteria were met. No action was required.

X.) TCL Compound Identification:

All TCL Compound Identification criteria were met. No action was taken.

XI.) Compound Quantitation and Reported Contract Required Quantitation Limits (CRQL):

All CRQL criteria were met. No action was required.

XII.) Tentatively Identified Compounds (TIC):

All TIC data criteria were met. No action was required.

XIII.) System Performance:

All System Performance criteria were met. No action was taken.

VOLATILE ORGANICS - UST

SUMMARY

All laboratory data were acceptable with qualifications.

MAJOR ISSUES

There were no major problems associated with this fraction of the SDG.

MINOR ISSUES

I.) Holding Times:

All Holding Time criteria were met. No action was required.

II.) GC / MS Tuning:

All GC / MS Tuning criteria were met. No action was required.

III.) Calibration:

Initial Calibration:

All Initial Calibration criteria were met. No action was required.

Continuing Calibration:

The Percent Differences (%D's) for the standards run on 7/11/03 at 19:24 on instrument KS215 exceeded the 15% QC limit for the following compounds:

benzene	17.1%
toluene	15.3%
ethylbenzene	15.6%

All positive and non-detect results for these compounds in the SDG samples were flagged as estimated (J) and (UJ).

IV.) Blanks:

There were no detections in the method blanks associated with this SDG. No action was required.

Tentatively Identified Compounds (TIC):

TIC data were not submitted for this SDG. No action was required.

V.) Surrogate Recoveries:

All Surrogate Recovery criteria were met. No action was required.

VI.) Laboratory Control Samples (LCS):

All LCS Recovery criteria were met with one LCS sample. No action was required.

VII.) Matrix Spike / Matrix Spike Duplicate (MS / MSD):

MS / MSD analyses were performed on SDG sample ACMW4S01P. All MS / MSD criteria were met. No action was required.

VIII.) Field Duplicates:

One set of field duplicate samples (ACSP17S01P / ACSP17S01D) was identified in this fraction of the SDG. There were no calculable Relative Percent Differences (RPDs). No action was required.

IX.) Internal Standards Performance (ISTD):

All ISTD criteria were met. No action was required.

X.) TCL Compound Identification:

All TCL Compound Identification criteria were met. No action was taken.

XI.) Compound Quantitation and Reported Contract Required Quantitation Limits (CRQL):

All CRQL criteria were met. No action was required.

XII.) Tentatively Identified Compounds (TIC):

All TIC data criteria were met. No action was required.

XIII.) System Performance:

All System Performance criteria were met. No action was taken.

SEMIVOLATILE ORGANICS

SUMMARY

All laboratory data were acceptable with qualifications.

MAJOR ISSUES

There were no major problems associated with this fraction of the SDG.

MINOR ISSUES

I.) Holding Times:

All Holding Time criteria were met. No action was required.

II.) GC / MS Tuning:

All GC / MS Tuning criteria were met. No action was required.

III.) Calibration:

Initial Calibration:

All Initial Calibration criteria were met. No action was required.

Continuing Calibration:

The Percent Differences (%D's) for the standards run on 7/14/03 at 14:58 on instrument KS202 exceeded the 15% QC limit for the following compounds:

4-nitroaniline	31%
butylbenzylphthalate	48%
3,3'-dichlorobenzidine	40%
benzo(b)fluoranthene	44%
benzo(k)fluoranthene	36%

All positive and non-detect results for these compounds in the SDG samples, were flagged as estimated (J) and (UJ).

The Percent Differences (%D's) for the standards run on 7/15/03 at 11:10 on instrument KS202 exceeded the 15% QC limit for the following compounds:

4-nitroaniline	31%
n-nitrosodiphenylamine	16%
fluoranthene	17%
butylbenzylphthalate	43%
3,3-dichorobenzidine	34%
benzo(b)fluoranthene	18%
benzo(k)fluoranthene	34%
indeno(1,2,3-cd)pyrene	16%
dibenzo(a,h)anthracene	17%

Since the associated samples were the SDG MS / MSD samples, no action was required.

IV.) Blanks:

There were no detections in the method blanks associated with this SDG. No action was required.

Tentatively Identified Compounds (TIC):

TIC data were not submitted for this SDG. No action was required.

V.) Surrogate Recoveries:

All Surrogate Recovery criteria were met. No action was required.

VI.) Laboratory Control Samples (LCS):

All LCS Recovery criteria were met with one LCS sample. No action was required.

VII.) Matrix Spike / Matrix Spike Duplicate (MS / MSD):

MS / MSD analyses data were performed on SDG sample ACMW3S01P. The Relative Percent Difference (RPD) for benzo(k)fluoranthene was 33%, which exceeded the 25% QC limit. Data qualification based on MS / MSD criteria was not required. No action was taken.

VIII.) Field Duplicates:

There were no field duplicate samples identified in this fraction of the SDG. No action was required.

IX.) Internal Standards Performance (ISTD):

All ISTD criteria were met. No action was required.

X.) TCL Compound Identification:

All TCL Compound Identification criteria were met. No action was taken.

XI.) Compound Quantitation and Reported Contract Required Quantitation Limits (CRQL):

All CRQL criteria were met. No action was required.

XII.) Tentatively Identified Compounds (TIC):

All TIC data criteria were met. No action was required.

XIII.) System Performance:

All System Performance criteria were met. No action was taken.

PESTICIDES

SUMMARY

The positive result for aldrin in SDG sample ACMW1S01P was rejected based on compound

identification criteria.

All other laboratory data were acceptable without qualification.

MAJOR ISSUES

I.) TCL Compound Identification:

The Column Percent Difference (%D) for aldrin in sample ACMW1S01P was 500%, which exceeded the 25% QC limit. Since the %D exceeded 300%, the result for this compound was rejected.

MINOR ISSUES

I.) Holding Times:

All Holding Time criteria were met. No action was required.

II.) Instrument Performance:

All Instrument Performance criteria were met. No action was required.

III.) Calibration:

All Initial and Continuing Calibration criteria were met. No action was required.

IV.) Blanks:

There were no detections in the associated method blanks. No action was required.

V.) Surrogate Recoveries:

All Surrogate Recovery criteria were met. No action was required.

VI.) Laboratory Control Samples (LCS):

One LCS was analyzed for this fraction of the SDG. All LCS Recovery criteria were met. No action was required.

VII.) Matrix Spike / Matrix Spike Duplicate (MS / MSD):

MS / MSD analyses were run on SDG sample ACMW3S01P. All MS / MSD criteria were met. No action was required.

VIII.) TCL Compound Identification:

Please see the Major Issues section for this fraction of the SDG.

IX.) Field Duplicates:

There were no field duplicate samples identified in this SDG. No action was required.

X.) Pesticide Cleanup Check:

Florisil Cartridge Check:

Florisil data was not provided. No action was required.

Gel Permeation Chromatography (GPC):

GPC data was not provided. No action was required.

XI.) Compound Quantitation and Reported Contract Required Quantitation Limits (CRQL):

All CRQL criteria were met. No action was required.

POLYNUCLEAR AROMATIC HYDROCARBONS (PAH)

SUMMARY

All laboratory data were acceptable with qualifications.

MAJOR ISSUES

There were no major problems for this fraction of the SDG.

MINOR ISSUES

I.) Holding Times:

All Holding Time criteria were met. No action was required.

II.) Instrument Performance:

All Instrument Performance criteria were met. No action was required.

III.) Calibration:

Initial Calibration:

The Percent Relative Standard Deviation (%RSD) for the standards analyzed on 7/15/03 on the fluorescence detector for instrument HPLCA exceeded the 20% QC limit for benzo(k)fluoranthene at 48.9%. Since this is the confirmation instrument, no action was taken.

Continuing Calibration:

The Percent Difference (%D) for the standards run on 7/20/03 at 17:34 on the ultraviolet detector of instrument HPLCA was 20.6% for benzo(k)fluoranthene, which exceeded the 20% QC limit for the confirmation analysis. The positive results for this compound in associated samples ACMW4S01P and ACSP18S01PDL were flagged as estimated (J).

IV.) Blanks:

Phenanthrene was detected at 6.5 ug/kg in method blank BLK02. The positive result for phenanthrene in associated sample ACMW4S01P, which was less than 5X the blank amount, was flagged as undetected (U).

V.) Surrogate Recoveries:

The Surrogates were diluted out of one SDG sample. All other Surrogate Recovery criteria were met. No action was required.

VI.) Laboratory Control Samples (LCS):

Two LCS samples were analyzed by the laboratory. All LCS Recovery criteria were met. No action was required.

VII.) Matrix Spike / Matrix Spike Duplicate (MS / MSD):

MS / MSD analyses were performed on SDG sample ACMW4S01P. Thirteen Relative Percent Differences (RPDs) and twenty-three Percent Recoveries (%R's) were outside the QC limits for this pair. Data qualification based on MS / MSD criteria was not required. No action was taken.

VIII.) Field Duplicates:

One set of field duplicate samples (ACSP17S01P / ACSP17S01D) was identified in this SDG. Relative Percent Differences (RPDs) were not calculated. No action was required.

IX.) Compound Quantitation and Reported Contract Required Quantitation Limits (CRQL):

The results for seven compounds in the initial analysis of sample ACSP18S01P exceeded the linear calibration range. The results for these seven compounds were flagged as estimated (J). A dilution analysis of this sample was performed with all criteria met. No further action was required.

The results for benzo(a)pyrene and indeno(1,2,3-cd)pyrene in the initial analysis of sample ACSP18S02P exceeded the linear calibration range. The results for these two compounds were flagged as estimated (J). A dilution analysis of this sample was performed with all criteria met. No further action was required.

TOTAL METALS AND CYANIDE

SUMMARY

All laboratory data were acceptable with qualifications.

MAJOR ISSUES

There were no major problems for this fraction of the SDG.

MINOR ISSUES

I.) Holding Times:

All Holding Time criteria were met. No action was taken.

II.) Calibration:

All Calibration criteria were met. No action was taken.

III.) Blanks:

The following blank result represents the highest detection associated with the samples:

Blank ID	Analyte	Max. Conc.	Action Level
ICB	barium	8.0 ug/L	8.0 mg/kg

ICB = Initial Calibration Blank

All SDG sample results for barium were greater than 5X the blank amount, so no action was required.

IV.) ICP Interference Check Sample Results:

All Interference Percent Recovery criteria were met. There were no interferences observed in the Interference Check Solution. No action was required.

V.) ICP Serial Dilution Analysis:

Serial Dilution Analysis data were not submitted for this SDG. All positive results for total metals for the SDG samples were flagged as estimated (J).

VI.) Laboratory Control Samples (LCS):

All LCS Recovery criteria were met. No action was necessary.

VII.) Duplicate Sample Analysis:

All Duplicate Sample Analysis criteria were met. No action was required.

VIII.) Matrix Spike / Matrix Spike Duplicate (MS / MSD):

MS / MSD analyses were performed on SDG samples ACMW4S01P and ACMW3S01P. The Percent Recoveries (%R's) for the following analytes were outside the 75-125% QC limits for samples ACMW4S01PMSD and ACMW3S01PMS:

Analyte	ACMW4S01PMSD	ACMW3S01PMS
barium	65.2%	72.9%
cadmium	71.9%	70.6%
lead	126%	178.5%
mercury		67.2%

All positive results for lead and all positive and non-detect results for barium, cadmium and mercury in the SDG samples were flagged as estimated (J) and (UJ).

IX.) Field Duplicates:

There were no field duplicate samples identified for this fraction of the SDG. No action was required.

X.) Sample Result, Calculation/Transcription Verification:

All criteria were met. No action was taken.

XI.) Quarterly Verification of Instrumental Parameters:

Quarterly Verification data were not submitted for this SDG. No action was taken.

DATA VALIDATION SUMMARY

Pace Analytical Laboratories, Inc. - 6072415 - Organics and Inorganics

SAMPLES: ACSP9S01P, ACSP9S02P, ACMW2S02P, ACSP701D, ACSP14S01P, ACSP14S02P, ACSP13S01P, ACSP13S02P, ACSP8S01P, ACSP8S02P, ACSP10S01P, ACSP10S02P, ACSP11S01P, ACSP11S02P, ACSP7S01P, ACSP7S02P, ACSP2S01P, ACSP2S02P, ACSP3S01P, ACSP3S02P, ACMW2S01P, ACSP7SS1S01P, ACSP8SS1S01P, ACSP10S01S01P

VOLATILE ORGANICS

SUMMARY

All laboratory data were acceptable with qualifications.

MAJOR ISSUES

There were no major problems associated with this fraction of the SDG.

MINOR ISSUES

I.) Holding Times:

The 18 days between sampling date and analysis date for sample ACSP9S01P exceeded the 14-day QC limit. All positive and non-detect results for this sample were flagged as estimated (J) and (UJ).

The 17 days between sampling date and analysis date for sample ACSP9S02P exceeded the 14-day QC limit. All positive and non-detect results for this sample were flagged as estimated (J) and (UJ).

II.) GC / MS Tuning:

All GC / MS Tuning criteria were met. No action was required.

III.) Calibration:

Initial Calibration:

All Initial Calibration criteria were met. No action was required.

Continuing Calibration:

The Percent Differences (%D's) for the standards run on 7/24/03 at 20:53 on instrument HP1 exceeded the 15% QC limit for the following compounds:

bromomethane	25.0%
chloroethane	16.4%
dichlorodifluoromethane	17.1%
1,2,4-trichlorobenzene	21.6%
hexachlorobutadiene	19.2%
1,2,3-trichlorobenzene	20.7%

All positive and non-detect results for these compounds in associated sample ACSP9S02P, were flagged as estimated (J) and (UJ).

The Percent Differences (%D's) for the standards run on 7/25/03 at 14:36 on instrument HP1 exceeded the 15% QC limit for the following compounds:

bromomethane	27.7%
chloroethane	18.5%
1,2,4-trichlorobenzene	16.0%
1,2,3-trichlorobenzene	16.9%

All positive and non-detect results for these compounds in associated sample ACSP9S01P, were flagged as estimated (J) and (UJ).

IV.) Blanks:

There were no detections in the method blanks associated with this SDG. No action was required.

Tentatively Identified Compounds (TIC):

TIC data were not submitted for this SDG. No action was required.

V.) Surrogate Recoveries:

All Surrogate Recovery criteria were met. No action was required.

VI.) Laboratory Control Samples (LCS):

Two LCS samples were analyzed by the laboratory. All LCS Recovery criteria were met. No action was required.

VII.) Matrix Spike / Matrix Spike Duplicate (MS / MSD):

MS / MSD analyses were not submitted for this fraction of the SDG. Data qualification based on MS / MSD criteria was not required. No action was taken.

VIII.) Field Duplicates:

There were no field duplicate samples identified in this fraction of the SDG. No action was required.

IX.) Internal Standards Performance (ISTD):

All ISTD criteria were met. No action was required.

X.) TCL Compound Identification:

All TCL Compound Identification criteria were met. No action was taken.

XI.) Compound Quantitation and Reported Contract Required Quantitation Limits (CRQL):

All CRQL criteria were met. No action was required.

XII.) Tentatively Identified Compounds (TIC):

All TIC data criteria were met. No action was required.

XIII.) System Performance:

All System Performance criteria were met. No action was taken.

VOLATILE ORGANICS - UST

SUMMARY

All laboratory data were acceptable with qualifications.

MAJOR ISSUES

There were no major problems associated with this fraction of the SDG.

MINOR ISSUES

I.) Holding Times:

All Holding Time criteria were met. No action was required.

II.) GC / MS Tuning:

All GC / MS Tuning criteria were met. No action was required.

III.) Calibration:

Initial Calibration:

All Initial Calibration criteria were met. No action was required.

Continuing Calibration:

The Percent Difference (%D) for the standards run on 7/17/03 at 09:27 on instrument KS215 exceeded the 15% QC limit for naphthalene at 31.1%. All results for these compounds in the associated SDG samples, which consisted entirely of non-detects, were flagged as estimated (UJ). The associated samples were ACSP14S01P, ACSP14S02P, ACSP13S01P, ACSP13S02P, ACSP8S01P, ACSP8S02P, ACSP10S01P, ACSP10S02P, ACSP11S01P, ACSP11S02P, ACSP7S01P, ACSP7S02P, ACSP2S01P, ACSP2S02P, ACSP3S01P, ACSP3S02P and ACMW2S01P.

IV.) Blanks:

There were no detections in the method blanks associated with this SDG. No action was required.

Tentatively Identified Compounds (TIC):

TIC data were not submitted for this SDG. No action was required.

V.) Surrogate Recoveries:

All Surrogate Recovery criteria were met. No action was required.

VI.) Laboratory Control Samples (LCS):

Two LCS samples were analyzed by the laboratory. All LCS Recovery criteria were met. No action was required.

VII.) Matrix Spike / Matrix Spike Duplicate (MS / MSD):

MS / MSD analyses data were performed on SDG samples ACSP14S01P and ACMW2S02P. All MS / MSD criteria were met. No action was required.

VIII.) Field Duplicates:

One set of field duplicate samples (ACSP7S01P / ACSP7S01D) was identified in this fraction of the SDG. There were no calculable Relative Percent Differences (RPDs). No action was required.

IX.) Internal Standards Performance (ISTD):

All ISTD criteria were met. No action was required.

X.) TCL Compound Identification:

All TCL Compound Identification criteria were met. No action was taken.

XI.) Compound Quantitation and Reported Contract Required Quantitation Limits (CRQL):

All CRQL criteria were met. No action was required.

XII.) Tentatively Identified Compounds (TIC):

All TIC data criteria were met. No action was required.

XIII.) System Performance:

All System Performance criteria were met. No action was taken.

SEMIVOLATILE ORGANICS

SUMMARY

All laboratory data were acceptable with qualifications.

MAJOR ISSUES

There were no major problems associated with this fraction of the SDG.

MINOR ISSUES

I.) Holding Times:

All Holding Time criteria were met. No action was required.

II.) GC / MS Tuning:

All GC / MS Tuning criteria were met. No action was required.

III.) Calibration:

Initial Calibration:

All Initial Calibration criteria were met. No action was required.

Continuing Calibration:

The Percent Differences (%D's) for the standards run on 7/14/03 at 14:58 on instrument KS202 exceeded the 15% QC limit for the following compounds:

4-nitroaniline	31%
butylbenzylphthalate	48%
3,3-dichlorobenzidine	40%
benzo(b)fluoranthene	44%
benzo(k)fluoranthene	36%

All positive and non-detect results for these compounds in the SDG samples, were flagged as estimated (J) and (UJ).

IV.) Blanks:

There were no detections in the method blanks associated with this SDG. No action was required.

Tentatively Identified Compounds (TIC):

TIC data were not submitted for this SDG. No action was required.

V.) Surrogate Recoveries:

All Surrogate Recovery criteria were met. No action was required.

VI.) Laboratory Control Samples (LCS):

One LCS sample was analyzed by the laboratory. All LCS Recovery criteria were met. No action was required.

VII.) Matrix Spike / Matrix Spike Duplicate (MS / MSD):

Batch MS / MSD analyses data were submitted for this fraction of the SDG. The Relative Percent Difference (RPD) for benzo(k)fluoranthene was 33%, which exceeded the 25% QC limit. Data qualification based on MS / MSD criteria was not required. No action was taken.

VIII.) Field Duplicates:

There were no field duplicate samples identified in this fraction of the SDG. No action was required.

IX.) Internal Standards Performance (ISTD):

All ISTD criteria were met. No action was required.

X.) TCL Compound Identification:

All TCL Compound Identification criteria were met. No action was taken.

XI.) Compound Quantitation and Reported Contract Required Quantitation Limits (CRQL):

All CRQL criteria were met. No action was required.

XII.) Tentatively Identified Compounds (TIC):

All TIC data criteria were met. No action was required.

XIII.) System Performance:

All System Performance criteria were met. No action was taken.

PESTICIDES

SUMMARY

All laboratory data were acceptable with qualifications.

MAJOR ISSUES

There were no major problems associated with this fraction of the SDG.

MINOR ISSUES

I.) Holding Times:

All Holding Time criteria were met. No action was required.

II.) Instrument Performance:

All Instrument Performance criteria were met. No action was required.

III.) Calibration:

Initial Calibration:

All Initial Calibration criteria were met. No action was required.

Continuing Calibration:

The Percent Differences (%D's) for the standards run on 7/16/03 at 16:05 on instrument KS116B were 15.4% for aldrin and 18.1% for alpha chlordane, which exceeded the 15% QC limit. The non-detect results for these two compounds in associated sample ACSP9S01P were flagged as estimated (UJ).

IV.) Blanks:

There were no detections in the associated method blanks. No action was required.

V.) Surrogate Recoveries:

All Surrogate Recovery criteria were met. No action was required.

VI.) Laboratory Control Samples (LCS):

One LCS was analyzed for this fraction of the SDG. All LCS Recovery criteria were met. No action was required.

VII.) Matrix Spike / Matrix Spike Duplicate (MS / MSD):

Batch MS / MSD analyses were run for this fraction of the SDG. All MS / MSD criteria were met. No

action was required.

VIII.) TCL Compound Identification:

The Column Percent Differences (%R's) exceeded the 25% QC Limit for sample ACSP9S01P for the following compounds:

4,4'-DDD	299%
methoxychlor	95.4%
endrin ketone	22.6%

The positive results for these compounds in sample ACSP9S01P were flagged as estimated (J).

IX.) Field Duplicates:

There were no field duplicate samples identified in this SDG. No action was required.

X.) Pesticide Cleanup Check:

Florisil Cartridge Check:

Florisil data was not provided. No action was required.

Gel Permeation Chromatography (GPC):

GPC data was not provided. No action was required.

XI.) Compound Quantitation and Reported Contract Required Quantitation Limits (CRQL):

All CRQL criteria were met. No action was required.

POLYNUCLEAR AROMATIC HYDROCARBONS (PAH)

SUMMARY

All laboratory data were acceptable with qualifications.

MAJOR ISSUES

There were no major problems for this fraction of the SDG.

MINOR ISSUES

I.) Holding Times:

All Holding Time criteria were met. No action was required.

II.) Instrument Performance:

All Instrument Performance criteria were met. No action was required.

III.) Calibration:

Initial Calibration:

All Initial Calibration criteria were met. No action was required.

Continuing Calibration:

The Percent Difference (%D) for the standards run on 7/26/03 at 19:00 on the fluorescence detector of instrument HPLCB was 15.5% for indeno(1,2,3-cd)pyrene, which exceeded the 15% QC limit. All positive and non-detect results for this compound in the associated samples were flagged as estimated (J) and (UJ). The associated samples were ACSP2S02P, ACSP2S01PDL, ACSP8S01P, ACSP8S02P and ACSP10S02P.

The Percent Difference (%D) for the standards run on 7/19/03 at 06:17 on the ultraviolet detector of instrument HPLCA was 60% for dibenzo(a,h)anthracene, which exceeded the 20% QC limit for the confirmation analysis. All positive and non-detect results for this compound in the associated samples were flagged as estimated (J) and (UJ). The associated samples were ACSP1S02P, ACSP3S02P, ACMW2S01P, ACMW2S02P and ACSP7S01D.

The Percent Difference (%D) for the standards run on 7/20/03 at 02:22 on the ultraviolet detector of instrument HPLCA was 37.2% for benzo(k)fluoranthene, which exceeded the 20% QC limit for the confirmation analysis. The positive result for this compound in associated sample ACMW2S01PDL was flagged as estimated (J).

The Percent Difference (%D) for the standards run on 7/26/03 at 05:24 on the ultraviolet detector on the instrument HPLCA was 46% for naphthalene, which exceeded the 20% QC limit for the confirmation analysis. All positive and non-detect results for this compound in the associated samples were flagged as estimated (J) and (UJ). The associated samples were ACSP7S01P, ACSP7S02P, ACSP11S01P, ACSP14S01P, ACSP6S01P, ACSP6S02P and ACSP7SS1S01P.

IV.) Blanks:

Phenanthrene was detected at 6.2 ug/kg in method blank BLK01. All positive results for phenanthrene in the associated samples, less than 5X the blank amount, were flagged as undetected (U). The associated samples were ACMW2S01P, ACMW2S01PDL, ACMW2S02P, ACSP3S02P and ACSP7S01D.

Phenanthrene was detected at 8.3 ug/kg in method blank BLK02. All positive results for phenanthrene in the associated samples, less than 5X the blank amount, were flagged as undetected (U). The associated samples were ACSP2S01P, ACSP2S01PDL, ACSP2S02P, ACSP3S01P, ACSP7S01P, ACSP7S02P, ACSP8S01P, ACSP8S02P, ACSP10S01P, ACSP10S02P, ACSP11S01P, ACSP11S02P, ACSP13S01P, ACSP13S02P, ACSP14S01P, ACSP14S02P, ACSP6S01P, ACSP6S02P, ACSP6S02PDL, ACSP7SS1S01P, ACSP7SS1S01PDL, ACSP8SS1S01P, ACSP10S01S01P and ACSP10S01S01PDL.

V.) Surrogate Recoveries:

A total of 18 surrogates were diluted out of 11 SDG samples. All other Surrogate Recovery criteria were met. No action was required.

VI.) Laboratory Control Samples (LCS):

Two LCS samples were analyzed by the laboratory. The Percent Recovery (%R) of phenanthrene was 141% for LCS02, which exceeded the 61-129% QC limits. Data qualification based on LCS Recovery criteria was not required. No action was taken.

VII.) Matrix Spike / Matrix Spike Duplicate (MS / MSD):

MS / MSD analyses were performed on SDG sample ACSP8S02P. One Relative Percent Difference (RPD) and four Percent Recoveries (%R's) were outside the QC limits for this pair. Data qualification based on MS / MSD criteria was not required. No action was taken.

VIII.) Field Duplicates:

One set of field duplicate samples (ACSP7S01P / ACSP7S01D) was identified in this SDG. Relative Percent Differences (RPDs) were not calculated. No action was required.

IX.) Compound Quantitation and Reported Contract Required Quantitation Limits (CRQL):

The results for six compounds in the initial analysis of sample ACMW2S01P exceeded the linear calibration range. The results for these six compounds were flagged as estimated (J). A dilution analysis of this sample was performed with all criteria met. No further action was required.

The results for six compounds in the initial analysis of sample ACSP2S01P exceeded the linear calibration range. The results for these six compounds were flagged as estimated (J). A dilution analysis of this sample was performed with all criteria met. No further action was required.

The result for phenanthrene in the initial analysis of sample ACSP6S02P exceeded the linear calibration range. The result for phenanthrene was flagged as estimated (J). A dilution analysis of this sample was performed with all criteria met. No further action was required.

The results for seven compounds in the initial analysis of sample ACSP7SS1S01P exceeded the linear calibration range. The results for these seven compounds were flagged as estimated (J). A dilution analysis of this sample was performed with all criteria met. No further action was required.

The result for pyrene in the initial analyses of samples ACSP10S01S01P and ACSP11S01P exceeded the linear calibration range. These results for pyrene were flagged as estimated (J). A dilution analysis of each of these samples was performed with all criteria met. No further action was required.

TOTAL METALS AND CYANIDE

SUMMARY

The positive result for mercury in sample ACSP9S01P was rejected based on extremely low continuing calibration recovery.

All other laboratory data were acceptable with qualifications.

MAJOR ISSUES

I.) Calibration:

The Percent Recovery (%R) of mercury was 46.9% for CCV2, which was below the 80-120% QC limit. Since the %R was less than 65%, the positive result for mercury in associated sample ACSP9S01P was rejected.

MINOR ISSUES

I.) Holding Times:

All Holding Time criteria were met. No action was taken.

II.) Calibration:

Please see the major issues section for this fraction of the SDG.

III.) Blanks:

The following blank result represents the highest detection associated with the samples:

Blank ID#	Analyte	Max. Conc.	Action Level
CCB2	barium	4.0 ug/L	4.0 mg/kg

CCB = Continuing Calibration Blank

The SDG sample results for barium were greater than 5X the blank amount, so no action was required.

IV.) ICP Interference Check Sample Results:

All Interference Percent Recovery criteria were met. There were not any analytes present in the Interference Check Solution. No action was required.

V.) ICP Serial Dilution Analysis:

Serial Dilution Analysis data were not submitted for this SDG. All positive results for total metals for the SDG samples were flagged as estimated (J).

VI.) Laboratory Control Samples (LCS):

All LCS Recovery criteria were met. No action was necessary.

VII.) Duplicate Sample Analysis:

All Duplicate Sample Analysis criteria were met. No action was required.

VIII.) Matrix Spike / Matrix Spike Duplicate (MS / MSD):

MS / MSD analyses were performed on SDG sample ACSP13S01P, as well as batch QC. The Percent Recovery (%R) of mercury in the batch MSD sample was 67.2%, which was outside the 75-125% QC limits. All positive and non-detect results for mercury in the SDG samples were flagged as estimated (J) and (UJ), unless previously rejected.

IX.) Field Duplicates:

One set of field duplicate samples (ACSP7S01P / ACSP7S01D) was identified for the cyanide fraction of the SDG. There was no calculable Relative Percent Differences (RPDs). No action was required.

X.) Sample Result, Calculation/Transcription Verification:

All criteria were met. No action was taken.

XI.) Quarterly Verification of Instrumental Parameters:

Quarterly Verification data were not submitted for this SDG. No action was taken.

REACTIVE CYANIDE

SUMMARY

All laboratory data were acceptable without qualification.

MAJOR ISSUES

There were no major problems for this fraction of the SDG.

MINOR ISSUES

I.) Holding Times:

All Holding Time criteria were met. No action was required.

II.) Calibration:

All Calibration criteria were met. No action was required.

III.) Blanks:

There were no detections in the blanks associated with this SDG. No action was required.

IV.) Laboratory Control Sample (LCS):

All LCS Recovery criteria were met. No action was required.

V.) Matrix Spike / Matrix Spike Duplicate (MS / MSD):

MS / MSD analyses were not submitted for this fraction of the SDG. Data qualification based on MS / MSD criteria was not required. No action was taken.

VI.) Matrix Spike Duplicate (MSD):

Matrix Duplicate analysis was not performed for this SDG. No action was required.

VII.) Field Duplicates:

There were no field duplicate samples identified in this fraction of the SDG. No action was necessary.

REACTIVE SULFIDE

SUMMARY

All laboratory data were acceptable without qualification.

MAJOR ISSUES

There were no major problems for this fraction of the SDG.

MINOR ISSUES

I.) Holding Times:

All Holding Time criteria were met. No action was required.

II.) Calibration:

Calibration criteria was not required. No action was taken.

III.) Blanks:

There were no detections in the blanks associated with this SDG. No action was required.

IV.) Laboratory Control Sample (LCS):

All LCS Recovery criteria were met. No action was required.

V.) Matrix Spike / Matrix Spike Duplicate (MS / MSD):

MS / MSD analyses were not submitted for this fraction of the SDG. Data qualification based on MS / MSD criteria was not required. No action was taken.

VI.) Matrix Spike Duplicate (MSD):

Matrix Duplicate analysis was not performed for this SDG. No action was required.

VII.) Field Duplicates:

There were no field duplicate samples identified in this fraction of the SDG. No action was necessary.

pH

SUMMARY

All laboratory data were acceptable without qualification.

MAJOR ISSUES

There were no major problems for this fraction of the SDG.

MINOR ISSUES

I.) Holding Times:

All Holding Time criteria were met. No action was required.

II.) Calibration:

All Calibration criteria were met. No action was required.

III.) Blanks:

There were no detections in the blanks associated with this SDG. No action was required.

IV.) Laboratory Control Sample (LCS):

All LCS Recovery criteria were met. No action was required.

V.) Matrix Spike / Matrix Spike Duplicate (MS / MSD):

MS / MSD analyses were not submitted for this fraction of the SDG. Data qualification based on MS / MSD criteria was not required. No action was taken.

VI.) Matrix Spike Duplicate (MSD):

All Matrix Duplicate analysis criteria were met. No action was required.

VII.) Field Duplicates:

There were no field duplicate samples identified in this fraction of the SDG. No action was necessary.

FLASHPOINT

SUMMARY

All laboratory data were acceptable without qualification.

MAJOR ISSUES

There were no major problems for this fraction of the SDG.

MINOR ISSUES

I.) Holding Times:

All Holding Time criteria were met. No action was required.

II.) Calibration:

Calibration criteria were not required. No action was taken.

III.) Blanks:

There were no detections in the blanks associated with this SDG. No action was required.

IV.) Laboratory Control Sample (LCS):

All LCS Recovery criteria were met. No action was required.

V.) Matrix Spike / Matrix Spike Duplicate (MS / MSD):

MS / MSD analyses were not submitted for this fraction of the SDG. Data qualification based on MS / MSD criteria was not required. No action was taken.

VI.) Matrix Spike Duplicate (MSD):

Matrix Duplicate analysis was not performed for this SDG. No action was required.

VII.) Field Duplicates:

There were no field duplicate samples identified in this fraction of the SDG. No action was necessary.

DATA VALIDATION SUMMARY

Pace Analytical Laboratories, Inc. - 6072421 - Organics and Inorganics

SAMPLES: ACDRUMS01P, ACMW5W01P, ACMW1W01P, ACMW2W01P, ACMW3W01P, ACMW5W01D, ACWTDRUMW01P, TRIP BLANK 1, TRIP BLANK 2, ACSP1S01P, ACSP1S02P, ACSP4S01P, ACSP4S02P, ACSP16S01P, ACSP16S02P, ACSP16SS1S01P

VOLATILE ORGANICS

SUMMARY

All laboratory data were acceptable with qualifications.

MAJOR ISSUES

There were no major problems associated with this fraction of the SDG.

MINOR ISSUES

I.) Holding Times:

All Holding Time criteria were met. No action was required.

II.) GC / MS Tuning:

All GC / MS Tuning criteria were met. No action was required.

III.) Calibration:

Initial Calibration:

All Initial Calibration criteria were met. No action was required.

Continuing Calibration:

The Percent Differences (%D's) for the standards run on 7/16/03 at 09:18 on instrument KS214 exceeded the 15% QC limit for the following compounds:

methylene chloride	16.3%
2-butanone	15.7%
4-methyl-2-pentanone	18.8%
2-hexanone	15.8%

All positive and non-detect results for these compounds in the associated samples, were flagged as estimated (J) and (UJ). The associated samples were ACMW1W01P, ACMW2W01P, ACMW3W01P, ACMW5W01P, ACMW5W01D and ACWTDRUMW01P.

The Percent Differences (%D's) for the standards run on 7/17/03 at 11:00 on instrument KS214 exceeded the 15% QC limit for the following compounds:

methylene chloride	28.0%
carbon disulfide	19.8%
carbon tetrachloride	17.3%
4-methyl-2-pentanone	16.2%
chloromethane	43.5%
dichlorodifluoromethane	20.0%
2,2-dichloropropane	16.0%
bromoethene	29.0%

All positive and non-detect results for these compounds in associated sample ACMW5W01P were flagged as estimated (J) and (UJ).

The Percent Differences (%D's) for the standards run on 7/18/03 at 22:39 on instrument HP1 exceeded the 15% QC limit for the following compounds:

chloromethane	21.7%
vinyl chloride	15.6%
1,3-dichlorobenzene	16.8%
1,4-dichlorobenzene	16.9%
dichlorodifluoromethane	29.5%
4-chlorotoluene	16.4%
n-butylbenzene	19.9%
1,2,4-trichlorobenzene	21.2%
hexachlorobutadiene	21.3%

All positive and non-detect results for these compounds in associated sample ACDRUMS01P were flagged as estimated (J) and (UJ).

IV.) Blanks:

Method Blanks:

2-Methylnaphthalene was detected at 2.0954 ug/L in method blank BLK149054. All positive results for this compound in the water SDG samples less than 5X the blank amount were flagged as undetected (U) with the results less than the CRQL being raised to the CRQL.

Trip Blanks:

2-Methylnaphthalene was detected at 1.4005 ug/L and 1.4032 ug/L in trip blanks #1 and #2, respectively. All positive results for this compound in the associated samples were previously flagged based on the method blank. No further action was required.

Tentatively Identified Compounds (TIC):

TIC data were not submitted for this SDG. No action was required.

V.) Surrogate Recoveries:

All Surrogate Recovery criteria were met. No action was required.

VI.) Laboratory Control Samples (LCS):

Three LCS samples were analyzed by the laboratory. All LCS Recovery criteria were met. No action was required.

VII.) Matrix Spike / Matrix Spike Duplicate (MS / MSD):

MS / MSD analyses were performed on SDG sample ACMW3W01P, as well as batch MS / MSD analyses. The Relative Percent Difference (RPD) for 1,1-dichloroethene was 27% for the batch MS / MSD analyses, which exceeded the 24% QC limit. Data qualification based on MS / MSD criteria was not required. No action was taken.

VIII.) Field Duplicates:

One set of field duplicate samples (ACMW5W01P / ACMW5W01D) was identified in this fraction of the SDG. The calculable Relative Percent Difference (RPD) for naphthalene was 12.6%, which was within the 30% QC limit for water samples. No action was required.

IX.) Internal Standards Performance (ISTD):

All ISTD criteria were met. No action was required.

X.) TCL Compound Identification:

All TCL Compound Identification criteria were met. No action was taken.

XI.) Compound Quantitation and Reported Contract Required Quantitation Limits (CRQL):

All CRQL criteria were met. No action was required.

XII.) Tentatively Identified Compounds (TIC):

All TIC data criteria were met. No action was required.

XIII.) System Performance:

All System Performance criteria were met. No action was taken.

VOLATILE ORGANICS - UST

SUMMARY

All laboratory data were acceptable with qualifications.

MAJOR ISSUES

There were no major problems associated with this fraction of the SDG.

MINOR ISSUES

I.) Holding Times:

All Holding Time criteria were met. No action was required.

II.) GC / MS Tuning:

All GC / MS Tuning criteria were met. No action was required.

III.) Calibration:

Initial Calibration:

All Initial Calibration criteria were met. No action was required.

Continuing Calibration:

The Percent Difference (%D) for the standards run on 7/11/03 at 19:24 on instrument KS215 exceeded the 15% QC limit for the following compounds:

benzene	17.1%
toluene	15.3%
ethylbenzene	15.6%

All results for these compounds in the SDG samples, which consisted entirely of non-detects, were flagged as estimated (UJ).

IV.) Blanks:

There were no detections in the method blanks associated with this SDG. No action was required.

Tentatively Identified Compounds (TIC):

TIC data were not submitted for this SDG. No action was required.

V.) Surrogate Recoveries:

All Surrogate Recovery criteria were met. No action was required.

VI.) Laboratory Control Samples (LCS):

One LCS sample was analyzed by the laboratory. All LCS Recovery criteria were met. No action was required.

VII.) Matrix Spike / Matrix Spike Duplicate (MS / MSD):

Batch MS / MSD analyses data were submitted for this fraction of the SDG. All MS / MSD criteria were met. No action was required.

VIII.) Field Duplicates:

There were no field duplicate samples identified in this fraction of the SDG. No action was required.

IX.) Internal Standards Performance (ISTD):

All ISTD criteria were met. No action was required.

X.) TCL Compound Identification:

All TCL Compound Identification criteria were met. No action was taken.

XI.) Compound Quantitation and Reported Contract Required Quantitation Limits (CRQL):

All CRQL criteria were met. No action was required.

XII.) Tentatively Identified Compounds (TIC):

All TIC data criteria were met. No action was required.

XIII.) System Performance:

All System Performance criteria were met. No action was taken.

SEMIVOLATILE ORGANICS

SUMMARY

All non-detect results for the compounds quantitated against perylene-d12 in SDG sample ACWTDRUMW01PDL were rejected.

All other laboratory data were acceptable with qualifications.

MAJOR ISSUES

I.) Internal Standards Performance (ISTD):

The Percent Recovery (%R) of perylene-d12 was 1.6% for sample ACWTDRUMW01PDL, which was below the 50-200% QC limits. All positive results for the compounds quantitated against this ISTD were flagged as estimated (J) and all non-detect results were rejected (R), since the %R was less than 25%.

MINOR ISSUES

I.) Holding Times:

All Holding Time criteria were met. No action was required.

II.) GC / MS Tuning:

All GC / MS Tuning criteria were met. No action was required.

III.) Calibration:

Initial Calibration:

All Initial Calibration criteria were met. No action was required.

Continuing Calibration:

The Percent Differences (%D's) for the standards run on 7/14/03 at 14:58 on instrument KS202 exceeded the 15% QC limit for the following compounds:

4-nitroaniline	31%
butylbenzylphthalate	48%
3,3'-dichlorobenzidine	40%
benzo(b)fluoranthene	44%
benzo(k)fluoranthene	36%

All positive and non-detect results for these compounds in associated SDG samples ACDRUMS01P and ACDRUMS01PDL, were flagged as estimated (J) and (UJ).

The Percent Differences (%D's) for the standards run on 7/16/03 at 15:08 on instrument KS202 exceeded the 15% QC limit for the following compounds:

4-nitroaniline	37%
butylbenzylphthalate	38%
3,3'-dichlorobenzidine	57%
benzo(b)fluoranthene	18%
benzo(k)fluoranthene	20%

All positive and non-detect results for these compounds in the associated samples were flagged as estimated (J) and (UJ). The associated samples were ACMW5W01D, ACMW2W01P, ACMW1W01P and ACMW5W01P.

The Percent Differences (%D's) for the standards run on 7/18/03 at 11:31 on instrument KS202 exceeded the 15% QC limit for the following compounds:

bis(2-chloroisopropyl)ether	16%
n-nitroso-di-n-propylamine	16%
3-nitroaniline	17%
2,4-dinitrophenol	17%
4-nitroaniline	30%
n-nitrosodiphenylamine	19%
di-n-butylphthalate	17%
fluoranthene	20%
butylbenzylphthalate	32%
3,3'-dichlorobenzidine	28%
benzo(b)fluoranthene	18%
benzo(k)fluoranthene	35%

All positive and non-detect results for these compounds in associated samples ACWTDRUMW01P, ACWTDRUMW01PDL and ACMW3W01P were flagged as estimated (J) and (UJ).

IV.) Blanks:

There were no detections in the method blanks associated with this SDG. No action was required.

Tentatively Identified Compounds (TIC):

TIC data were not submitted for this SDG. No action was required.

V.) Surrogate Recoveries:

All Surrogate Recovery criteria were met. No action was required.

VI.) Laboratory Control Samples (LCS):

Three LCS samples were analyzed by the laboratory. All LCS Recovery criteria were met. No action was required.

VII.) Matrix Spike / Matrix Spike Duplicate (MS / MSD):

Batch MS / MSD analyses data were submitted for soil samples in this fraction of the SDG. The Relative Percent Difference (RPD) for benzo(k)fluoranthene was 33%, which exceeded the 25% QC limit. Data qualification based on MS / MSD criteria was not required. No action was taken.

MS / MSD analyses were performed on water SDG sample ACMW3W01P. A total of five Relative Percent Differences (RPDs) and three Percent Recoveries (%R's) were outside the QC limits. Data

qualification based on MS / MSD criteria was not required. No action was taken.

VIII.) Field Duplicates:

One set of field duplicate samples (ACMW5W01P / ACMW5W01D) was identified in this fraction of the SDG. There were no calculable Relative Percent Differences (RPDs). No action was required.

IX.) Internal Standards Performance (ISTD):

Please see the major issues section for this fraction of the SDG.

X.) TCL Compound Identification:

All TCL Compound Identification criteria were met. No action was taken.

XI.) Compound Quantitation and Reported Contract Required Quantitation Limits (CRQL):

The results for ten compounds in the initial analysis of sample ACDRUMS01P exceeded the linear calibration range. The results for these compounds were flagged as estimated (J). A dilution analysis of this sample was analyzed with all calibration criteria met. No further action was required.

XII.) Tentatively Identified Compounds (TIC):

All TIC data criteria were met. No action was required.

XIII.) System Performance:

All System Performance criteria were met. No action was taken.

PESTICIDES

SUMMARY

The positive results for aldrin and alpha chlordane in SDG sample ACDRUMS01P were rejected based on TCL Compound Identification criteria.

All other laboratory data were acceptable with qualification.

MAJOR ISSUES

I.) TCL Compound Identification:

The Column Percent Differences (%R's) exceeded the 25% QC Limit for sample ACDRUMS01P for the following compounds:

aldrin	365%
alpha chlordane	1556%

The positive results for these compounds in sample ACDRUMS01P were rejected (R), since the %D's exceeded 300%.

MINOR ISSUES

I.) Holding Times:

All Holding Time criteria were met. No action was required.

II.) Instrument Performance:

All Instrument Performance criteria were met. No action was required.

III.) Calibration:

Initial Calibration:

All Initial Calibration criteria were met. No action was required.

Continuing Calibration:

The Percent Differences (%D's) for the standards run on 7/16/03 at 23:07 on instrument KS116A exceeded the 15% QC limit for the following compounds:

alpha BHC	21.0%
gamma BHC	18.2%
heptachlor	16.0%
endosulfan I	16.6%
endrin	22.5%
4,4'-DDD	27.4%

All positive and non-detect results for these compounds in associated samples ACWTDRUMW01P, ACMW1W01P and ACMW3W01P were flagged as estimated (J) and (UJ).

The Percent Differences (%D's) for the standards run on 7/16/03 at 16:05 on instrument KS116B were 15.4% for aldrin and 18.1% for alpha chlordane, which exceeded the 15% QC limit. The non-detect results for these compounds in associated sample ACDRUMS01P were previously rejected, so no further action was necessary.

The Percent Differences (%D's) for the standards run on 7/16/03 at 23:50 on instrument KS116B exceeded the 15% QC limit for the following compounds:

alpha BHC	16.0%
gamma BHC	15.2%
endrin	25.5%
4,4'-DDD	28.3%
4,4'-DDT	24.7%

The positive and non-detect results for 4,4'-DDT in associated samples ACWTDRUMW01P, ACMW1W01P and ACMW3W01P were flagged as estimated (J) and (UJ). The results for the other compounds in the associated samples were previously flagged, so no further action was required.

IV.) Blanks:

There were no detections in the associated method blanks. No action was required.

V.) Surrogate Recoveries:

All four Percent Recoveries (%R's) exceeded the 60-150% QC limits for sample ACMW3W01PMS. Since the sample was a QC sample, no action was required. All other Surrogate Recovery criteria were met.

VI.) Laboratory Control Samples (LCS):

Two LCS samples were analyzed for this fraction of the SDG. All LCS Recovery criteria were met. No action was required.

VII.) Matrix Spike / Matrix Spike Duplicate (MS / MSD):

Batch MS / MSD analyses were run for the soil samples in this fraction of the SDG. All MS / MSD criteria were met. No action was required.

MS / MSD analyses were performed on SDG water sample ACMW3W01P. A total of twenty Percent Recoveries (%R's) and eighteen Relative Percent Differences (RPDs) were outside the QC limits. Data qualification based on MS / MSD criteria was not required. No action was taken.

VIII.) TCL Compound Identification:

The Column Percent Differences (%R's) exceeded the 25% QC Limit for sample ACDRUMS01P for the following compounds:

4,4'-DDD	140%
chlordane	83.4%

The positive results for these compounds in sample ACDRUMS01P were flagged as estimated (J). Please also see the Major Issues section for this fraction of the SDG.

IX.) Field Duplicates:

There were no field duplicate samples identified in this fraction of the SDG. No action was required.

X.) Pesticide Cleanup Check:

Florisil Cartridge Check:

Florisil data was not provided. No action was required.

Gel Permeation Chromatography (GPC):

GPC data was not provided. No action was required.

XI.) Compound Quantitation and Reported Contract Required Quantitation Limits (CRQL):

All CRQL criteria were met. No action was required.

POLYNUCLEAR AROMATIC HYDROCARBONS (PAH)

SUMMARY

All laboratory data were acceptable with qualifications.

MAJOR ISSUES

There were no major problems for this fraction of the SDG.

MINOR ISSUES

I.) Holding Times:

All Holding Time criteria were met. No action was required.

II.) Instrument Performance:

All Instrument Performance criteria were met. No action was required.

III.) Calibration:

Initial Calibration:

All Initial Calibration criteria were met. No action was required.

Continuing Calibration:

The Percent Difference (%D) for the standards run on 7/19/03 at 06:17 on the ultraviolet detector of instrument HPLCA was 60% for dibenzo(a,h)anthracene, which exceeded the 20% QC limit for the confirmation analysis. The non-detect result for this compound in the associated sample ACSP1S02P was flagged as estimated (UJ).

The Percent Difference (%D) for the standards run on 7/20/03 at 02:22 on the ultraviolet detector of instrument HPLCA was 37.2% for benzo(k)fluoranthene, which exceeded the 20% QC limit for the confirmation analysis. The positive result for this compound in associated sample ACSP16SS1S01PDL was flagged as estimated (J).

IV.) Blanks:

Phenanthrene was detected at 6.2 ug/kg in method blank BLK01. All positive results for phenanthrene in the SDG samples, which were less than 5X the blank amount, was flagged as undetected (U).

V.) Surrogate Recoveries:

A total of 3 Surrogates were diluted out of 3 SDG samples. All other Surrogate Recovery criteria were met. No action was required.

VI.) Laboratory Control Samples (LCS):

One LCS sample was analyzed by the laboratory. All LCS criteria were met. No action was required.

VII.) Matrix Spike / Matrix Spike Duplicate (MS / MSD):

MS / MSD analyses were performed on SDG sample ACSP16SS1S01P. All Fifteen Relative Percent Differences (RPDs) and twenty seven Percent Recoveries (%R's) were outside the QC limits for this pair. Data qualification based on MS / MSD criteria was not required. No action was taken.

VIII.) Field Duplicates:

There were no field duplicate samples identified in this SDG. No action was required.

IX.) Compound Quantitation and Reported Contract Required Quantitation Limits (CRQL):

The result for pyrene in the initial analysis of sample ACSP16SS1S01P exceeded the linear calibration range. The result for pyrene was flagged as estimated (J). A dilution analysis of this sample was performed with all criteria met. No further action was required.

TOTAL METALS AND CYANIDE

SUMMARY

All laboratory data were acceptable with qualifications.

MAJOR ISSUES

There were no major problems associated with this fraction of the SDG.

MINOR ISSUES

I.) Holding Times:

All Holding Time criteria were met. No action was taken.

II.) Calibration:

All Calibration criteria were met. No action was required.

III.) Blanks:

The following blank results represent the highest detections associated with the sample and were used for data qualification:

Blank ID	Analyte	Max. Conc.	Action Level
ICB	barium	8.0 ug/L	8.0 mg/kg
PBW2	barium	7.7 ug/L	38.5 ug/L
CCB2	chromium	0.7 ug/L	3.5 ug/L
PBW1	lead	2.3 ug/L	11.5 ug/L
PBW	mercury	0.013 ug/L	0.065 ug/L
PBW1	selenium	10.9 ug/L	54.5 ug/L

CCB = Continuing Calibration Blank, ICB = Initial Calibration Blank,
PBW = Preparation Blank (Water)

All results for these analytes in the SDG samples less than 5X the blank amount were flagged as undetected (U).

IV.) ICP Interference Check Sample Results:

All Interference Percent Recovery criteria were met. There were not any analytes present in the Interference Check Solution. No action was required.

V.) ICP Serial Dilution Analysis:

Serial Dilution Analysis data were not submitted for this SDG. All positive results for total metals for the SDG samples were flagged as estimated (J).

VI.) Laboratory Control Samples (LCS):

All LCS Recovery criteria were met. No action was necessary.

VII.) Duplicate Sample Analysis:

All Duplicate Sample Analysis criteria were met. No action was required.

VIII.) Matrix Spike / Matrix Spike Duplicate (MS / MSD):

MS / MSD analyses were performed on water SDG sample ACMW3W01P. All MS / MSD criteria were met. No action was required.

Batch MS / MSD analyses were performed for the soil SDG samples. The Percent Recoveries (%R's) of the following analytes were outside the 75-125% QC limits for samples ACMW4S01PMSD and

ACMW3S01PMS:

Analyte	ACMW4S01PMSD, %R	ACMW3S01PMS, %R
barium	65.2%	72.9%
cadmium	71.9%	70.6%
lead	126%	178.5%
mercury		67.2%

All positive results for lead and all positive and non-detect results for barium, cadmium and mercury in the soil SDG samples were flagged as estimated (J) and (UJ).

IX.) Field Duplicates:

One set of field duplicate samples (ACMW5W01P / ACMW5W01D) was identified for this fraction of the SDG. The calculable Relative Percent Difference (RPD) for mercury was 10%, which was within the 30% QC limit for water samples. No action was required.

X.) Sample Result, Calculation/Transcription Verification:

All criteria were met. No action was taken.

XI.) Quarterly Verification of Instrumental Parameters:

Quarterly Verification data were not submitted for this SDG. No action was taken.

BIOLOGICAL OXYGEN DEMAND

SUMMARY

All laboratory data were acceptable without qualification.

MAJOR ISSUES

There were no major problems for this fraction of the SDG.

MINOR ISSUES

I.) Holding Times:

All Holding Time criteria were met. No action was required.

II.) Calibration:

Calibration criteria were not required for this fraction of the SDG. No action was taken.

III.) Blanks:

There were no detections in the blanks associated with this SDG. No action was required.

IV.) Laboratory Control Sample (LCS):

All LCS Recovery criteria were met. No action was required.

V.) Matrix Spike / Matrix Spike Duplicate (MS / MSD):

MS / MSD analyses were not submitted for this fraction of the SDG. Data qualification based on MS / MSD criteria was not required. No action was taken.

VI.) Matrix Spike Duplicate (MSD):

Matrix Duplicate analysis was not performed for this SDG. No action was required.

VII.) Field Duplicates:

There were no field duplicate samples identified in this fraction of the SDG. No action was necessary.

CHEMICAL OXYGEN DEMAND (COD)

SUMMARY

All laboratory data were acceptable without qualification.

MAJOR ISSUES

There were no major problems for this fraction of the SDG.

MINOR ISSUES

I.) Holding Times:

All Holding Time criteria were met. No action was required.

II.) Calibration:

Calibration criteria was not required. No action was taken.

III.) Blanks:

There were no detections in the blanks associated with this SDG. No action was required.

IV.) Laboratory Control Sample (LCS):

All LCS Recovery criteria were met. No action was required.

V.) Matrix Spike (MS):

MS analysis was performed on SDG sample ACWTDRUMW01P. All MS criteria were met. No action was required.

VI.) Matrix Spike Duplicate (MSD):

Matrix Duplicate analysis was not performed for this SDG. No action was required.

VII.) Field Duplicates:

There were no field duplicate samples identified in this fraction of the SDG. No action was necessary.

pH

SUMMARY

All laboratory data were acceptable without qualification.

MAJOR ISSUES

There were no major problems for this fraction of the SDG.

MINOR ISSUES

I.) Holding Times:

All Holding Time criteria were met. No action was required.

II.) Calibration:

All Calibration criteria were met. No action was required.

III.) Blanks:

There were no detections in the blanks associated with this SDG. No action was required.

IV.) Laboratory Control Sample (LCS):

All LCS Recovery criteria were met. No action was required.

V.) Matrix Spike / Matrix Spike Duplicate (MS / MSD):

MS / MSD analyses were not submitted for this fraction of the SDG. Data qualification based on MS / MSD criteria was not required. No action was taken.

VI.) Matrix Spike Duplicate (MSD):

All Matrix Duplicate analysis criteria were met. No action was required.

VII.) Field Duplicates:

There were no field duplicate samples identified in this fraction of the SDG. No action was necessary.

OIL AND GREASE

SUMMARY

All laboratory data were acceptable without qualification.

MAJOR ISSUES

There were no major problems for this fraction of the SDG.

MINOR ISSUES

I.) Holding Times:

All Holding Time criteria were met. No action was required.

II.) Calibration:

Calibration criteria were not required. No action was taken.

III.) Blanks:

There were no detections in the blanks associated with this SDG. No action was required.

IV.) Laboratory Control Sample (LCS):

All LCS Recovery criteria were met. No action was required.

V.) Matrix Spike / Matrix Spike Duplicate (MS / MSD):

Batch MS / MSD analyses were submitted for this fraction of the SDG. All MS / MSD criteria were met. No action was required.

VI.) Matrix Spike Duplicate (MSD):

Matrix Duplicate analysis was not performed for this SDG. No action was required.

VII.) Field Duplicates:

There were no field duplicate samples identified in this fraction of the SDG. No action was necessary.

TOTAL SUSPENDED SOLIDS (TSS)

SUMMARY

All laboratory data were acceptable without qualification.

MAJOR ISSUES

There were no major problems for this fraction of the SDG.

MINOR ISSUES

I.) Holding Times:

All Holding Time criteria were met. No action was required.

II.) Calibration:

Calibration criteria were not required. No action was taken.

III.) Blanks:

There were no detections in the blanks associated with this SDG. No action was required.

IV.) Laboratory Control Sample (LCS):

All LCS Recovery criteria were met. No action was required.

V.) Matrix Spike / Matrix Spike Duplicate (MS / MSD):

MS / MSD analyses were not submitted for this fraction of the SDG. No action was required.

VI.) Matrix Spike Duplicate (MSD):

All MD criteria were met using batch Matrix Duplicate analyses. No action was required.

VII.) Field Duplicates:

There were no field duplicate samples identified in this fraction of the SDG. No action was necessary.