Disease Prevention for Fairs and Festivals

Contents

Introduction 3

Animal Contact Area Facility Design 4

Resources and Checklist 6

Animal Care and Management 7

Resources and Checklist 10

Food Safety 11

Resources and Checklist 12

Report Authors and Contact Information 13

Appendices

A: Compendium of Measures to Prevent Disease Associated with Animals in Public Settings

B: Examples of hand washing signs in English and Spanish

C: Animal Contact Area Facility Design Checklist

D: Animal Welfare Act Guidelines for County and State Fairs

E: Q fever Safety at Livestock Birthing Exhibits: Information for Operators and Managers

F: Animal Care and Management Checklist

G: How to Wash and When to Wash signs

H: Food Facilities Checklist

I: Human and Animal Health Contacts

Introduction

Fairs and festivals are an important Kansas tradition. They provide an opportunity for people to explore new areas and connect with their heritage, as well as educate and entertain. Animal exhibits and animal contact areas are often part of fairs and festivals and give some people their only up close and personal look at a variety of different animals, especially those traditionally found on farms. This connection, or human-animal bond, is important especially for children. It is equally important to understand that animals can transmit diseases to people. There were approximately 200 human infectious disease outbreaks involving animals in public settings in the United States from 1996-2012[1]. These outbreaks have substantial medical, public health, legal, and economic effects[1].

This toolkit is designed for fair and festival managers and public health officials to understand the considerations that should be made when organizing and operating a fair or festival. This toolkit concentrates primarily on preventing zoonotic diseases, those diseases transmitted between animals and people. It is based on the *Compendium of Measures to Prevent Disease Associated with Animals in Public Settings*[1]. In addition, a section on food safety has been included as many foodborne illness outbreaks involve animal-related diseases (e.g. *Salmonella* from undercooked poultry, Shiga toxin-producing *E. coli* from undercooked ground beef, etc.).

During the course of your fair or festival you may be faced with a variety of situations that involve the health and safety of visitors and animals. It is important to have a plan in place prior to your event. This includes obtaining the contact information for local human healthcare facilities (e.g. Urgent Care, Emergency Departments), the local health department, veterinarians and the Kansas Department of Agriculture's Division of Animal Health. These situations are not all-inclusive but should serve to assist you in your plan.

There are three sections in this toolkit: animal contact area facility design, animal care and management, and food safety. At the end of each section there are a list of resources and an accompanying checklist. In addition we have provided signs that can be printed and used at your fair or festival free of charge.

We are proud of our heritage and the tradition of fairs and festivals in our great state. Disease prevention is a team effort and we welcome the opportunity to become part of your team. For questions regarding the information in this toolkit contact Dr. Ingrid Garrison, State Public Health Veterinarian, at 785-296-2501.

Animal Contact Area Facility Design

1. Hand washing is the most important way to prevent disease. Hand washing with warm water and soap is preferred over hand sanitizer for both animal contact and food service settings.

    - Ensure an adequate number of hand washing facilities are available for the size of your event. Estimate the number of visitors in the petting zoo at peak hours of operation and the average time spent in the exhibit area. To calculate the number of sink basins needed, use the following:

$$\frac{\text{\# of people } x \text{ 1 minute (average time for hand washing)}}{\text{\# of minutes spent in exhibit area}} = \text{\# of hand-washing basins needed}$$

    - Each hand washing station should have running water, soap and paper towels. They should be accessible for children and persons with disabilities.

    - Hand sanitizer should be used only as a supplement to soap and water. It does not replace soap and water for hand washing.

    - Hand washing stations should be strategically located at or near all exits from animal contact areas, food service and eating areas, and washroom or portable toilets.

2. Animal contact area design is another important factor for disease prevention. Many diseases are spread through contact with feces or respiratory droplets and secretions and these pathogens can live on inanimate objects, such as strollers, shoes, pacifiers, bottles, cups, etc., for long periods of time. Therefore it is important to minimize contact with animal feces and keep these items out of the animal contact area.

    - Contact with animals should only be allowed over or through barriers, such as fences. Visitors should not be allowed into pens.

    - Do not transport manure or soiled bedding through public places.

- A transition area should be at the entrance of the animal contact area. Do not allow strollers into the animal contact area. Provide a place for visitors to park strollers and leave their bags.

- A transition area should be at the exit of the animal contact area where hand washing stations are available so visitors cannot miss them.

- Food service and eating areas should be kept separate from the animal contact area.

3. Staff and visitor education are a third important step to prevent disease transmission from animals to people. Staff should be educated about the risk for disease and injury associated with animals, how diseases are transmitted from animals to people, and share these messages with visitors.

    - Ensure signs with the following information are available at the entrance to the animal contact area:
        - Animals can carry germs that make people sick
        - No food or drink allowed in animal areas
        - No strollers in animal areas
        - No hand-to-mouth activities in the animal contact area (e.g. drinking, eating, bottles, pacifiers)
        - Children under 5 years old, senior citizens, pregnant women, people with chronic health conditions or a weakened immune system should be extra careful around animals

    - Ensure signs with the following information are available at the exit of the animal contact area:
        - Wash hands thoroughly with soap and water immediately after visiting the animals

    - Staff members should verbally instruct visitors to wash their hands after animal contact and ensure visitors do not bring items, such as strollers and bottles, into the animal contact area.

4. Cleaning and disinfection of the animal contact area is a fourth important facility design consideration. All surfaces should be cleaned thoroughly to remove organic matter (e.g. feces, soiled bedding, spilled feed, etc.), before disinfection. A 1:32 dilution of household bleach (e.g. ½ cup of bleach for each gallon of water) is needed for basic disinfection. Leave the disinfectant on the surface for at least 10 minutes for it to work.

Resources

- Compendium of Measures to Prevent Disease Associated with Animals in Public Settings[1] [*Appendix A*] - http://www.nasphv.org/documentsCompendiumAnimals.html

- Examples of hand washing signs in English and Spanish [*Appendix B*]

Checklist

- Animal Contact Area Facility Design [*Appendix C*]

Animal Care and Management

Animals can carry and shed harmful pathogens without signs of illness. Many pathogens that are harmful to humans, such as Shiga-toxin producing *Escherichia coli* (e.g. *E. coli* O157), do not make animals sick. Proper animal care and management are critical for the welfare of the animals and the safety of visitors.

1. Health certificates – All animals entering Kansas are required to have a Health Certificate signed by a veterinarian. Some types of animals are required to be tested for certain diseases. Visit the Kansas Department of Agriculture's Division of Animal Health website or contact them at 785-564-6601 for more information.

2. Rabies vaccination – All dogs and cats, over 3 months of age, entering Kansas are required to be currently vaccinated against rabies. If a dog or cat is from Kansas they may still be required to be vaccinated against rabies; however, each city and county may have a different rabies vaccination requirement. There have been numerous incidents of rabid animals at fairs and petting zoos that sparked a massive nation-wide investigation. A licensed rabies vaccination is available for dogs, cats, ferrets, horses, cattle, and sheep. We recommend all animals in contact areas, for which a licensed rabies vaccine is available, be vaccinated. A veterinarian may use a rabies vaccine off-label if there is not an approved vaccine for that species (e.g. use sheep rabies vaccine to immunize goats). The rabies vaccine must be given by a licensed veterinarian.

3. Wild animals – Wild animals should not be included as part of an animal contact area. Wild animals raised in captivity are still wild animals. Their behavior tends to be unpredictable. Exceptions to this recommendation include those instances when the wild animals are presented by a professional who has experience handling wildlife, and the animals are displayed in enclosed cages which prevent contact between the animal and the public. Due to the high incidence of rabies in skunks, raccoons, wild carnivores and bats these animals should not be permitted in animal contact areas under any circumstances. In Kansas it is unlawful to possess skunks, foxes, raccoons, and coyotes as pets (K.A.R. 28-1-14).

4. Dangerous, aggressive or poisonous animals – These animals are not recommended for animal contact areas.

5. Baby poultry – Baby chicks and ducks pose a high risk for transmitting *Salmonella*, especially to children. Baby poultry cannot be guaranteed to be '*Salmonella*-free' as the bacteria are shed intermittently and the birds do not appear sick. Over the last several years there have been numerous nation-wide outbreaks associated with baby chicks and ducks. We do not recommend baby poultry as part of an animal contact exhibit.

6. Calves – Calves, or baby cows, are not recommended to use in animal contact areas. Calves have been the source of numerous outbreaks. They are considered to be high-risk of transmitting diseases such as *Campylobacter* and Shiga toxin-producing *E. coli*. Do not allow physical contact by the public.

7. Reptiles and amphibians – Reptiles, such as lizards, iguanas, and non-poisonous snakes, and amphibians, such as salamanders and frogs, pose a high risk for transmitting *Salmonella*, especially to children. Reptiles and amphibians cannot be guaranteed to be '*Salmonella*-free' as the bacteria are shed intermittently and the animals do not appear sick. There have been several nation-wide outbreaks associated with reptiles. If reptiles and amphibians are present they should be under the direct responsibility of professionals who have training and experience handling them. They should be kept and displayed in cases which provide a physical barrier between the animal and children.

8. Psittacine birds – Psittacine birds, such as parrots, parakeets, budgies, and cockatiels, can carry a zoonotic disease called psittacosis (also known as parrot fever). Birds should be kept in an area where their waste can be contained, such as within a cage, and the waste cleaned.

9. Swine – Although rare, influenza A viruses can be spread from pigs to people and from people to pigs. This has happened at different settings including agricultural fairs. Ill swine should be removed from the exhibition immediately. People who work with swine should be vaccinated against seasonal influenza. People with influenza-like illness should stay away from pigs until they are fever-free for at least 24 hours without the use of fever reducing medication. Anyone who is at high risk of serious flu complications planning to attend a fair where pigs will be present should avoid pigs and swine barns at the fair.

10. Animal care – All animals should be provided with clean water, food, and shelter. Animals should be housed in a way that minimizes stress and overcrowding.

11. Drinking water – Only potable water should be used for consumption by animals and humans[1]. The use of outdoor hoses should be minimized, and hoses should not be left on the ground[1]. Hoses that are accessible to the public should be labeled to indicate the water is not for human consumption[1].

12. Sick or injured animals – If an individual, or group, of animals appears ill the animal should be removed from the animal contact area or exhibit and kept away from other animals and people. A veterinarian should examine the animal(s), provide a diagnosis, and treat the animal(s) appropriately. It is important to communicate with the veterinarian to understand the diagnosis and if the animal's illness is contagious to other animals or people.

- If the veterinarian suspects the animal has a reportable disease they must contact the Kansas Department of Agriculture's Division of Animal Health at 785-564-6601.

- If the animal has a contagious, reportable disease other animals around it may need to be quarantined. This will be determined by the Kansas Department of Agriculture.

- If the animal has a disease that is contagious to people the veterinarian should contact the local health department for assistance. The local health department can provide recommendations regarding prevention and control.

13. Veterinary care – A local veterinarian should be identified to provide veterinary care as needed.

14. Animal bites – The primary disease of concern is rabies. Animal bite reporting varies between jurisdictions. Determine what the animal bite reporting requirements are for your area by contacting the local health department. Place the biting animal in a separate area away from visitors and other animals. All animal bites to people should be evaluated for potential of rabies transmission. The local health department or KDHE can provide assistance.

15. Sale of animals – Vendors that sell animals are required to be licensed by the Kansas Department of Agriculture per the Kansas Pet Animal Act. Even vendors who only sell animals one day per year are required to be licensed. See Kansas Pet Animal Act for more information or call the Kansas Department of Agriculture at 785-564-6601.

    - Tiny turtles (those with a shell length of less than 4 inches) are banned from being sold by the Food and Drug Administration. The ban has been in effect in the United States since 1975. Tiny turtles have been the source of numerous outbreaks of *Salmonella*, especially among children.

16. Licensing – Under the Animal Welfare Act, the United States Department of Agriculture (USDA) requires animal exhibitors including petting zoos to be licensed through the Animal and Plant Health Inspection Service (APHIS). All animal exhibitors must be licensed unless they are exempt from licensing [*Appendix D*]. Exhibitors in Kansas should contact the APHIS Animal Care Western Region office for more information at 970-494-7461 or acwest@aphis.usda.gov.

17. Livestock Birthing Exhibits – These exhibits provide a unique opportunity for visitors as well as potential for exposure to a disease called Q fever. This bacterial disease is found in infected animal body fluids, particularly placenta, birth fluids, and newborn animals. Goats, sheep, and cows are most often implicated as the source of human infection. Exhibit specific prevention recommendations can be found in the Q fever Safety at Livestock Birthing Exhibits: Information for Operators and Managers factsheet [*Appendix E*].

Resources

- Requirements for Animal Health Certificates in Kansas - http://agriculture.ks.gov/divisions-programs/division-of-animal-health/import-and-export-regulations

- Compendium of Animal Rabies Prevention and Control - http://www.nasphv.org/Documents/RabiesCompendium.pdf

- Compendium of Measure to Control *Chlamydophila psittaci* Infection Among Humans (Psittacosis) and Pet Birds (Avian Chlamydiosis) - http://www.nasphv.org/documentsCompendiaPsittacosis.html

- Measures to Minimize Influenza Transmission at Swine Exhibitions, 2013 - http://www.nasphv.org/documentsCompendiaZoonoticInfluenza.html

- Kansas Pet Animal Act – Information on licensing requirements for vendors that sell animals http://agriculture.ks.gov/docs/default-source/rc-ah-afi-documents/kansas-pet-animal-act-for-website.pdf?sfvrsn=2

- Animal Welfare Act Guidelines for County and State Fairs – [*Appendix D*]

- Prevention and Control of *Coxiella burnetii* Infection among Humans and Animals: Guidance for a Coordinated Public Health and Animal Health Response, 2013 - http://www.nasphv.org/Documents/Q_Fever_2013.pdf

- Q fever Safety at Livestock Birthing Exhibits: Information for Operators and Managers – [*Appendix E*]

Checklist

- Animal Care and Management [*Appendix F*]

Food Safety

The Centers for Disease Control and Prevention estimates that each year approximately one in six Americans (or 48 million people) are sickened, 128,000 are hospitalized, and 3,000 die of foodborne diseases. Food safety practices should be the same at fairs and festivals as they are at any other licensed food establishment.

1. Licensing – In Kansas, food establishments including temporary food facilities are regulated by the Kansas Department of Agriculture (KDA) under the Kansas Food Code. Facilities must be licensed unless they are specifically exempted from licensing. All food facilities must follow safe food handling practices whether they are exempt from licensing or not. For more information on exemptions, visit KDA's website or call the Division of Food Safety and Lodging at (785) 564-6767.

2. Inspection reports – Each licensed facility is inspected at least once annually by the Kansas Department of Agriculture. All inspection reports are available online.

3. Person in charge – Each food facility must have a designated Person in Charge, who must be present at the food establishment during all hours of operation. Contact information for the Person in Charge of each food facility should be obtained.

4. Hand washing sinks – At least one hand washing sink is required for employees and must not be used for any purpose other than hand washing. Hand washing sinks should be convenient to areas where food and beverages are stored, prepared, served, or consumed. Effective hand hygiene should be performed by all food handlers.

5. Exclusion of ill food handlers – To prevent the spread of foodborne disease, individuals should be excluded from handling food if they have certain symptoms, including vomiting or diarrhea, or have been diagnosed with certain diseases, including norovirus, *Shigella*, enterohemorrhagic or Shiga toxin-producing *E. coli*, or hepatitis A. (K.A.R. 28-1-6, Kansas Food Code).

6. Raw milk – In Kansas, the sale and promotion of raw (unpasteurized) milk and products made from raw milk are prohibited at any location other than on the farm where the milk was produced. Raw (unpasteurized) milk and products made from raw milk may not be sold or advertised at fairs or festivals. (K.S.A. 65-771).

7. Drinking water – All drinking water systems should be inspected before use. Only potable water should be used. Backflow prevention devices should be installed between outlets in livestock areas and water lines supplying other areas on the grounds. If the water supply is from a well, adequate distance should be maintained from possible sources of contamination (e.g. animal holding areas and manure piles). Maps of the water distribution system should be available for use in identifying potential or actual problems. The use of outdoor hoses should be minimized,

and hoses should not be left on the ground. Hoses that are accessible to the public should be labeled to indicate the water is not for human consumption. Operators and managers of settings in which treated municipal water is not available should ensure that a safe water supply (e.g., bottled water) is available.

8. Reports of illness – A log of all human illnesses reported to the fair or festival operator or staff should be maintained. This information should be recorded to identify any possible sources of disease and any potential outbreaks. The following information should be collected; name, contact information, symptoms (e.g. diarrhea, vomiting), and date of symptom onset.

    - Outbreaks – An outbreak is an occurrence of disease greater than would be expected at a particular time and place. If two or more people experience a similar illness, this constitutes an outbreak. All outbreaks are reportable, by law, to the Kansas Department of Health and Environment. To report an outbreak, call the 24/7 Epidemiology Hotline at (877) 427-7317.

Resources

- How to Wash and When to Wash signs [*Appendix G*]
- Local Health Department contacts - http://www.kdheks.gov/olrh/download/health_directory.pdf
- Kansas Department of Health and Environment Disease Reporting Hotline – (877) 427-7317 (this number is monitored at all times)
- Kansas Department of Agriculture Animal Disease Reporting Hotline – (785) 564-6601
- KDA Division of Food Safety and Lodging Hotline – (800) 915-6163 (call for after-hours concerns about food vendors; this number is *not* monitored during business hours)
- KDA Foodborne Illness Complaints – (785) 564-6767 (this number monitored during business hours only)
- KDA Online Foodborne Illness Complaint Form – http://agriculture.ks.gov/divisions-programs/food-safety-lodging/report-a-complaint

Checklists

- Food Facilities [*Appendix H*]
- Human and Animal Health Contacts [*Appendix I*]

Report Publication Date

This version: 1 May 2016
Original publication: 12 June 2014

Report Authors

Ingrid C. Garrison, DVM, MPH, DACVPM
State Public Health Veterinarian
Kansas Department of Health and Environment

Lindsey Martin Webb, MPH
Epidemiologist
Kansas Department of Health and Environment

Contact Information

Kansas Department of Health & Environment
Bureau of Epidemiology and Public Health Informatics
1000 SW Jackson Street, Suite 075
Topeka, KS 66612
Epidemiology Hotline: (877) 427-7317
epihotline@kdheks.gov
http://www.kdheks.gov/epi

Our Mission:

To protect and improve the health and environment of all Kansans

Appendix A

Compendium of Measures to Prevent Disease Associated with Animals in Public Settings

Public Veterinary Medicine: Public Health

Compendium of Measures to Prevent Disease Associated with Animals in Public Settings, 2013

National Association of State Public Health Veterinarians Animal Contact Compendium Committee 2013

Preface

The Compendium of Measures to Prevent Disease Associated with Animals in Public Settings has been published by the NASPHV and CDC since 2005.[1] The compendium provides standardized recommendations for public health officials, veterinarians, animal venue operators, animal exhibitors, visitors to animal venues and exhibits, and others concerned with control of disease and with minimizing health risks associated with animal contact in public settings. The report has undergone several revisions, and this document substantially updates information provided in the 2011 compendium.[2]

Introduction

Contact with animals in public settings (eg, fairs, educational farms, petting zoos, and schools) provides opportunities for entertainment and education. The NASPHV understands the positive benefits of human-animal contact. However, an inadequate understanding of disease transmission and animal behavior can increase the likelihood of infectious diseases, rabies exposures, injuries, and other health problems among visitors, especially children, in these settings. Zoonotic diseases (ie, zoonoses) are diseases transmitted between animals and humans. Of particular concern are instances in which zoonotic disease outbreaks result in numerous persons becoming ill. During 1991 through 2005, the number of enteric disease outbreaks associated with animals in public settings increased.[3] During 1996 through 2012, approximately 200 human infectious disease outbreaks involving animals in public settings were reported to the CDC. Such outbreaks have substantial medical, public health, legal, and economic effects.

Abbreviations

HUS	Hemolytic-uremic syndrome
NASPHV	National Association of State Public Health Veterinarians
STEC	Shiga toxin–producing *Escherichia coli*

Although eliminating all risk from animal contacts is not possible, this report provides recommendations for minimizing associated disease and injury. The NASPHV recommends that local and state public health, agricultural, environmental, and wildlife agencies use these recommendations to establish their own guidelines or regulations for reducing the risk for disease from human-animal contact in public settings. Public contact with animals is permitted in numerous types of venues (eg, animal displays, petting zoos, animal swap meets, pet stores, feed stores, zoological institutions, nature parks, circuses, carnivals, educational farms, livestock-birthing exhibits, agricultural fairs, child-care facilities or schools, camps, agritourism venues, and live animal markets) and other situations (eg, wildlife photo opportunities). Managers of these venues should use the information in this report in consultation with veterinarians, public health officials, or other professionals to reduce risks for disease transmission.

Guidelines to reduce risks for disease from animals in health-care facilities, veterinary facilities, and various other occupational settings and from service animals (eg, therapy dogs) have been developed.[4–9] Although not specifically addressed here, the general principles

The NASPHV Animal Contact Compendium Committee: Kirk E. Smith, DVM, PhD, (Co-Chair), Minnesota Department of Health, 625 Robert St N, Saint Paul, MN 55155; John R. Dunn, DVM, PhD, (Co-Chair), Tennessee Department of Health, 425 5th Ave N, Nashville, TN 37243; Louisa Castrodale, DVM, Alaska Department of Health and Social Services, 3601 C St No. 540, Anchorage, AK 99503; Russell Daly, DVM, Department of Veterinary and Biomedical Sciences, College of Agriculture and Biological Sciences, South Dakota State University, Brookings, SD 57007; and Ron Wohrle, DVM, Washington State Department of Health, PO Box 47853, Olympia, WA 98504. Consultants to the Committee: Casey Barton Behravesh, MS, DVM, DrPH, CDC, 1600 Clifton Rd, Atlanta, GA 33033; Karen Beck, DVM, PhD, North Carolina Department of Agriculture and Consumer Services, 2 W Edenton St, Raleigh, NC 27601; Marla J. Calico, International Association of Fairs and Expositions, 3043 E Cairo, Springfield, MO 65802; Allan Hogue, DVM, USDA, 4700 River Rd, Riverdale Park, MD 20737; Christine Hahn, MD, Council of State and Territorial Epidemiologists, Idaho Division of Public Health, 450 W State St, Boise, ID 83720; Thomas Hairgrove, DVM, American Association of Extension Veterinarians, Kleberg Center, Room 133, 2471 TAMU, College Station, TX 77843; Thomas P. Meehan, DVM, Association of Zoos and Aquariums, 8403 Colesville Rd, Ste 710, Silver Spring, MD 20910; and Kendra Stauffer, DVM, AVMA Council on Public Health and Regulatory Veterinary Medicine, 1931 N Meacham Rd, Schaumburg, IL 60173.

This article has not undergone peer review; opinions expressed are not necessarily those of the AVMA.

Address correspondence to Dr. Smith (kirk.smith@state.mn.us).

and recommendations in this report are applicable to these settings.

Methods

The NASPHV periodically updates the recommendations to prevent disease associated with animals in public settings. The revision process includes reviewing recent literature; updating information on reported outbreaks, diseases, or injuries attributed to human-animal interactions in public settings; and soliciting input from NASPHV members and the public. During October 3 through 5, 2012, NASPHV members and external expert consultants met at the CDC in Atlanta. A committee consensus was required to add or modify existing language or recommendations. The 2013 guidelines have been updated with recently reported information about zoonotic disease outbreaks and prevention measures.

Enteric (Intestinal) Diseases

A recent evaluation used data from case-control studies of sporadic infections as well as outbreak data to estimate the burden of enteric illness attributable to animal contact in the United States.[10] The pathogens included in that study[10] were *Campylobacter* spp, *Cryptosporidium* spp, nontyphoidal *Salmonella enterica*, STEC O157:H7, non–O157 STEC strains, *Listeria monocytogenes*, and *Yersinia enterocolitica*. The investigators estimated that 445,213 illnesses, 4,933 hospitalizations, and 76 deaths caused by these pathogens occurred annually owing to animal contact in all (ie, private and public) settings. Pathogens with the highest proportion of cases attributable to animal contact were *Campylobacter* spp (17%), *Cryptosporidium* spp (16%), nontyphoidal *S enterica* (11%), non–O157 STEC strains (8%), and STEC O157:H7 (6%).

Enteric bacteria and parasites pose the highest risk for human disease from animals in public settings.[11] Healthy animals can harbor human enteric pathogens, many of which have a low infectious dose.[12–14] Enteric disease outbreaks among visitors to fairs, farms, petting zoos, and other public settings are well documented.[15–34] Although reports often indicate that cattle, sheep, or goats[3,21,28] are sources for infection, live poultry,[35–38] rodents,[39–42] reptiles,[20,43,44] amphibians,[45–47] and other domestic and wild animals[48] also are established sources.

The primary mode of transmission for enteric pathogens is fecal-oral. Because animal fur, hair, feathers, scales, skin, and saliva harbor fecal organisms,[49] transmission can occur when persons pet, touch, feed, or are licked by animals. Transmission also has been associated with exposure to contaminated animal bedding, flooring, barriers, other environmental surfaces, and contaminated clothing and shoes.[18,20,24,45,50,51,a,b] In addition, illness has resulted from fecal contamination of food,[52] including raw milk[34,53–56] and drinking water.[57–59]

Removing ill animals, especially those with diarrhea, from display is necessary but not sufficient to protect the health of humans and other animals. Animals carrying human enteric pathogens frequently have no signs of illness but can still shed the organisms, thereby contaminating the environment.[60] Some pathogens are shed by animals intermittently and live for months or years in the environment.[61–65] Intermittent shedding of pathogens and limitations of laboratory testing make attempts to identify and remove infected animals unreliable as a means of eliminating the risk for transmission. Administering antimicrobials to animals also cannot reliably eliminate infection, prevent shedding, or protect against reinfection. In addition, antimicrobial use in animals can prolong shedding and contribute to antimicrobial resistance.[66]

Multiple factors increase the probability of disease transmission at animal exhibits. Animals are more likely to shed pathogens because of stress induced by prolonged transportation, confinement, crowding, and increased handling.[67–73] Commingling increases the probability that animals shedding pathogens will infect other animals.[74] The prevalence of certain enteric pathogens is higher in young animals,[75–77] which are frequently used in petting zoos and educational programs for children, than in mature animals. Shedding of STEC and *Salmonella* organisms is highest in the summer and fall, when substantial numbers of traveling animal exhibits, agricultural fairs, and petting zoos are scheduled.[72,77,78]

The risk for human infection is increased by certain factors and behaviors, especially in children. These factors and behaviors include lack of awareness of the risk for disease, inadequate hand washing, lack of close supervision, and hand-to-mouth activities (eg, use of pacifiers, thumb sucking, and eating).[79] Children are particularly attracted to animal venues but have increased risk for serious illness when they are infected, compared with that for healthy adults. Although farm residents might have some acquired immunity to certain pathogens,[80,c] livestock exhibitors have become infected with STEC O157:H7 in outbreaks at fairs.[18]

The layout and maintenance of facilities and animal exhibits can increase or decrease the risk for infection.[81] Factors that increase risk include inadequate hand-washing facilities,[82] inappropriate flow of visitors, and incomplete separation between animal exhibits and food preparation and consumption areas.[17,24,83] Other factors include structural deficiencies associated with temporary food-service facilities, contaminated or inadequately maintained drinking water systems, and poorly managed sewage or manure containment and disposal.[20,51,57–59,84]

Early outbreak examples: the importance of hand washing—In 2000, 2 STEC O157:H7 outbreaks in Pennsylvania and Washington prompted the CDC to establish recommendations for enteric disease prevention associated with farm animal contact. Risk factors identified in both outbreaks were direct animal contact and inadequate hand washing.[16,85] In the Pennsylvania outbreak, 51 persons (median age, 4 years) became ill within 10 days after visiting a dairy farm. Eight (16%) of those patients developed HUS, a potentially fatal complication of STEC infection that involves kidney failure. The same strain of STEC O157:H7 was isolated from cattle, patients, and the farm environment. An assessment of the farm determined that no areas separate from the animal contact areas existed for eating and drinking, and the hand-washing facilities were poorly maintained and not configured for children.[16]

The protective effect of hand washing and the persistence of organisms in the environment were demonstrated in an outbreak of *S enterica* serotype Enteritidis infections at a Colorado zoo in 1996. Sixty-five cases (primarily among children) were associated with touching a wooden barrier around a temporary Komodo dragon exhibit. Children who were not ill were significantly more likely to have washed their hands after visiting the exhibit. *Salmonella enterica* serotype Enteritidis was isolated from 39 patients, a Komodo dragon, and the wooden barrier.[20]

In 2005, an STEC O157:H7 outbreak among 63 patients, including 7 who developed HUS, was associated with goats at multiple fairs in Florida.[28] Both direct animal contact and contact with sawdust or shavings were associated with illness. The likelihood of illness was higher for persons who reported feeding animals, and lower for those who reported washing their hands before eating or drinking, compared with those who did not. Among persons who washed their hands with soap and water, creating lather decreased the likelihood of illness, illustrating the value of thorough hand washing; however, drying hands on clothing increased the likelihood of illness.[d]

During 2000 through 2001, at a Minnesota children's farm day camp, washing hands with soap after touching a calf and washing hands before going home decreased the likelihood for illness in 2 outbreaks involving multiple enteric pathogens.[26] Implicated pathogens for the 84 human infections were STEC O157:H7, *Cryptosporidium parvum*, non–O157 STEC strains, *S enterica* serotype Typhimurium, and *Campylobacter jejuni*. These pathogens and *Giardia* organisms were identified from calves. Risk factors for children who became ill included caring for an ill calf and getting a visible amount of manure on their hands.

Additional key points and lessons learned from outbreak investigations—Disease transmission can occur in the absence of direct animal contact if a pathogen is disseminated in the environment. In a 2002 Oregon county fair outbreak, 60 STEC O157:H7 infections occurred, primarily among children.[b] Illness was associated with visiting an exhibition hall that housed goats, sheep, pigs, rabbits, and poultry; however, illness was not associated with touching animals or their pens, eating, or inadequate hand washing, and the STEC O157:H7 was likely disseminated to environmental surfaces via contaminated dust.[b] In 2004, an outbreak of STEC O157:H7 infections was associated with visiting a North Carolina State Fair petting zoo where visitors could walk among and interact directly with approximately 100 goats and sheep.[21] Health officials identified 108 affected individuals, including 15 who developed HUS. Risk factors among petting zoo visitors included touching or stepping in manure and engaging in hand-to-mouth behaviors. Evidence indicated that falling down or sitting on the ground in the petting zoo also was associated with illness. The outbreak strain of STEC O157:H7 was isolated from numerous environmental samples from the petting zoo and from shoes and shavings collected from a stroller in the home environment of petting zoo visitors.[21] In 2009, an outbreak of 14 STEC O157:H7 infections occurred in which 12 ill persons reported attendance at 1 of 4 rodeos in Utah and Idaho; all 4 rodeos had included bulls from the same cattle supplier.[31] No ill persons reported direct animal contact, but 5 reported direct contact with cattle manure (eg, touching manure on fences or walking through manure) at the rodeos. The outbreak strain of STEC O157:H7 was isolated from a dirt sample collected from a bullpen at 1 rodeo.

Enteric pathogens can persist in contaminated environments for long periods. For example, STEC O157:H7 can survive in soil for months.[18,31,51,63,65,86,e] Prolonged environmental persistence of pathogens was reported in a 2001 Ohio outbreak of STEC O157:H7 infections in which 23 persons became ill at a fair facility after handling sawdust, attending a dance, or eating and drinking in a barn where animals had been exhibited during the previous week.[51] Fourteen weeks after the fair, STEC O157:H7 was isolated from multiple environmental sources within the barn, including sawdust on the floor and dust on the rafters. Forty-two weeks after the fair, STEC O157:H7 was again recovered from sawdust on the floor. Environmental persistence of STEC O157:H7 was also described after a 2003 outbreak in which 25 persons acquired the pathogen at a Texas agricultural fair. The same strain isolated from patients was found in fairground environmental samples 46 days after the fair ended.[18] Similarly, in the previously described Utah and Idaho rodeo outbreak, the STEC O157:H7–positive dirt sample was collected 90 days after the end of the rodeo.[31] In the North Carolina outbreak, the outbreak strain of STEC O157:H7 was isolated from animal bedding 10 days after the fair ended and from soil 5 months after the animal bedding and topsoil were removed from the premises.[21,86,e]

Improper facility design and inadequate maintenance can increase risk for infection, as illustrated by one of the largest waterborne disease outbreaks in the United States.[57,58] In 1999, approximately 800 suspected cases of infection with STEC O157:H7, *Campylobacter* spp, or both were identified among attendees at a New York county fair, where unchlorinated water supplied by a shallow well was used by food vendors to make beverages and ice.[58]

Temporary animal exhibits are particularly vulnerable to design flaws.[20,28] Such exhibits include animal displays or petting zoos added to attract visitors to zoos, festivals, roadside attractions, farm stands, farms where persons can pick their own produce (eg, apple orchards), feed stores, and Christmas tree lots. In 2005, an outbreak of STEC O157:H7 infections in Arizona was associated with a temporary animal contact exhibit at a municipal zoo.[28] A play area for children was immediately adjacent to and downhill from the petting zoo facility. The same strain of STEC O157:H7 was found in samples collected from children and from 12 petting zoo animals. Inadequate hand-washing facilities were reported for a temporary exhibit in British Columbia, Canada, where child-care facility and school field trips to a pumpkin patch with a petting zoo resulted in 44 cases of STEC O157:H7 infection.[17] In that outbreak, the same strain of the pathogen was found in samples collected from children and from a petting zoo goat.

Running water and signs recommending hand washing were not available, and alcohol-containing hand sanitizers were at a height that was unreachable for some children.

Contamination of food products or food preparation areas has occurred secondary to animal contact in multiple outbreaks. In 2004, 163 persons became ill with STEC O111:H8 infection, *Cryptosporidium* spp infection, or both at a farm stand in New York that sold unpasteurized apple cider and had a petting zoo with 3 calves.[f] Fecal samples from 2 calves tested positive for Shiga toxin 1. In 2009, 46 persons became ill with cryptosporidiosis at a youth summer camp in North Carolina. The primary route of transmission was foodborne, but the ultimate source of contamination of the food was thought to be preweaned calves that had recently been brought into the camp and that tested positive for the same subtype of *C parvum* as was recovered from ill campers.[29] In 2011, 14 persons became ill with *C parvum* infection, STEC O111:NM infection, or both after drinking unpasteurized apple cider at an apple orchard in Minnesota. The outbreak strains of both organisms were recovered from ruminants in the orchard's petting zoo. Contamination of the cider was suspected to have occurred via petting-zoo animal caretakers, who also conducted manual cider-pressing demonstrations.[g] Multiple foodborne outbreaks of salmonellosis have been described in which contamination was attributed to food preparers having had contact with live poultry during large, multistate outbreaks.[37,87]

Day camps at which children have prolonged, close contact with livestock pose a unique challenge with regard to disease prevention. In the previously mentioned Minnesota day camp outbreak,[26] disease transmission occurred again even though heightened prevention measures were implemented on the basis of findings from an outbreak investigation at the same camp the year before. Similarly, in 2007, an outbreak of STEC O157:H7 infections occurred at a day camp in Florida where prolonged contact with livestock was encouraged.[88]

Recurrent outbreaks have happened because of failure to properly implement disease-prevention recommendations. Following a Minnesota outbreak of cryptosporidiosis with 31 ill students at a school farm program, specific recommendations provided to teachers were inadequately implemented, and a subsequent outbreak occurred with 37 illnesses.[22] Hand-washing facilities and procedures were inadequate, and coveralls and boots were dirty, cleaned infrequently, and handled without subsequent hand washing.

Awareness of zoonotic disease risks is protective against illness in outbreaks.[21] Therefore, education of visitors to public animal contact venues about the risk for transmission of diseases from animals to humans is a critical disease-prevention measure.

Disease outbreaks also have resulted from contaminated animal products used for school activities. Salmonellosis outbreaks associated with dissection of owl pellets have occurred in Minnesota[89] and Massachusetts.[h] In Minnesota, risk factors for infection included inadequate hand washing, use of food service areas for the activity, and improper cleaning of contact surfaces. Persons in a middle school science class were among those infected in a multistate salmonellosis outbreak associated with frozen rodents purchased through the Internet from 1 supplier to feed snakes.[39]

Other outbreaks with implications for public settings—During 2005 through 2012, several infectious disease outbreaks were caused by contact with animals or animal products primarily in nonpublic settings. However, some of these outbreaks have involved exposures in public settings or have potential implications for public animal contact venues. On the basis of repeated outbreak occurrences, animals that present a high risk for human *Salmonella* infections include reptiles, such as turtles, snakes, or lizards[20,43,44,90–97]; amphibians, especially frogs[45–47,98]; and poultry, including chicks, chickens, and ducklings.[35–38,87,99–102] Other animals associated with outbreaks of human illness include hedgehogs[48] and rodents such as hamsters, mice, and guinea pigs.[39–42,103] Infected animals can appear healthy and clean and still shed *Salmonella* or other zoonotic pathogens. *Salmonella* infections can result from direct animal contact but also from having contact with objects from the animal's environment.

An increasing number of people are keeping live poultry in backyard flocks. Since 1990, 45 multistate disease outbreaks linked to live poultry from mail-order hatcheries have been reported to the CDC as of 2012. Some of the ill persons in those outbreaks reported contact with live poultry at feed stores, schools, day care facilities, fairs, nursing homes, or petting zoos.[99] Some mail-order hatcheries have been implicated repeatedly as sources for outbreaks of human *Salmonella* infections linked to live poultry.[35–37] Preventive measures in those hatcheries can help prevent salmonellosis in families buying live poultry.[36] Following guidance provided by the USDA National Poultry Improvement Plan[104] is important; however, that plan is intended to eliminate certain strains of *Salmonella* that cause illness in poultry breeding flocks and hatcheries, but it does not certify that these poultry are free from other strains of *Salmonella* that may cause human illness.

Since 1975, it has been illegal in the United States to sell or distribute small turtles (those with shells that measure < 4 inches in length). This size was chosen because young children (< 5 years of age) are more likely to treat small turtles as toys and put them in their mouths. However, small turtles continue to be distributed, causing an ongoing public health problem. Since 2006, 13 multistate outbreaks of salmonellosis have been linked to contact with small turtles and their habitats (including 8 outbreaks investigated in 2012 and 2013) and > 850 illnesses, including a fatal case in an infant.[43,44,90,92–94,105] During 2008 through 2011, 376 *S enterica* serotype Typhimurium infections were linked to contact with African dwarf frogs (an aquatic amphibian), their tank water, or tank contents.[47] Ill persons included those who reported such contact at carnivals, nursing homes, day cares, pet stores, and other retail stores.[45–47]

Activities associated with increased risk of zoonotic disease transmission from turtles, frogs, and other aquatic animals include direct and indirect contact

with the animal, tank, water, filtration equipment, or other tank contents. Multidrug-resistant *Salmonella* infections in humans have been linked to contact with contaminated water from home aquariums containing tropical fish.[106,107] A single case of *Plesiomonas shigelloides* infection in a Missouri infant was identified, and the organism was subsequently isolated from a babysitter's aquarium.[108] A survey of tropical fish tanks in Missouri found that 4 of 18 (22%) tanks from 3 pet stores yielded *P shigelloides*. These findings have implications for risk of infection from aquatic exhibits (eg, aquariums and aquatic touch tanks).

Pet food and treats have been confirmed as sources of human salmonellosis in several instances. During 2006 through 2008, 79 *S enterica* serotype Schwarzengrund infections in humans were linked to multiple brands of contaminated dry dog and cat foods produced at a plant in Pennsylvania.[109] In 2012, 49 human *S enterica* serotype Infantis infections were linked to multiple brands of contaminated dry dog food produced at a plant in South Carolina.[110] Contaminated pig ear treats and pet treats containing beef and seafood also have been associated with *Salmonella* infections.[111–114] These outbreaks highlight concerns with contaminated pet food that may be present in public settings. Lastly, raw animal protein diets, which consist of foods such as meat, poultry, milk, and eggs that have not been cooked or treated to kill pathogens, represent a concern for animal and human health. Raw diets should not be fed to dogs and cats because of the risk of illness to pets as well as to people.[115]

Sporadic infections—Case-control studies[96,116–118] also have associated sporadic infections (ie, those not linked to an outbreak) with animals including reptiles, farm animals, and cats. For example, a study[118] of sporadic STEC O157:H7 infections in the United States determined that persons who became ill, especially children, were more likely than persons who did not become ill to have visited a farm with cows. Additional studies also documented an association between STEC O157:H7 infection and visiting a farm[119] or living in a rural area.[120] Results of studies[121,122,c] of cryptosporidiosis in humans have also revealed that contact with cattle and visiting farms are risk factors for infection. Another study[123] identified multiple factors associated with *Campylobacter* infection, including consumption of raw milk and contact with farm animals.

Exposure to Rabies

Persons who have contact with rabid mammals can be exposed to rabies virus through a bite or when mucous membranes or open wounds become contaminated with infected saliva or nervous tissue. Although no human rabies deaths caused by animal contact in public settings have been reported in the United States, multiple rabies exposures have occurred, requiring extensive public health investigation and medical follow-up. Thousands of persons have received rabies post-exposure prophylaxis after being exposed to rabid or potentially rabid animals (or their carcasses), including bats, raccoons, cats, goats, bears, sheep, horses, foxes, and dogs, at various venues: an urban public park,[i] a pet store in New Hampshire,[124] a county fair in New York,[125] petting zoos in Iowa[126,127] and Texas,[j] school and rodeo events in Wyoming,[82] a horse show in Tennessee,[128] a school in Alaska, and summer camps in New York.[129] Substantial public health and medical care challenges associated with potential mass rabies exposures include difficulty in identifying and contacting persons potentially at risk, correctly assessing exposure risks, and providing timely medical prophylaxis when indicated. Prompt assessment and treatment are critical to prevent this disease, which is almost always fatal.

Influenza

Transmission of influenza viruses between humans and animals has increasingly important implications for human-animal interactions in public settings. Sporadic cases and small clusters of human infections with variant influenza viruses have been reported since the 1970s[130,131]; several of these cases were associated with exposure to swine at agricultural fairs.[132–134] However, between July 2011 and October 2012, > 300 confirmed cases of influenza A (H3N2) variant virus infection were reported across 10 states.[135–140] Most cases developed in children who reported direct contact with swine at agricultural fairs. Although most cases were mild and self-limiting, 16 hospitalizations were reported, including 1 death in an adult with underlying medical conditions. Transmission of human influenza viruses from people to swine also has been reported.[141] For example, in 2009, a new strain of influenza A (H1N1) virus emerged, causing a pandemic among humans with sporadic transmission from humans to swine.[142]

Other Infections

Multiple bacterial, viral, fungal, and parasitic infections have been associated with animal contact, and the infecting organisms are transmitted through various modes. Infections from animal bites are common and frequently require extensive treatment or hospitalization. Bacterial pathogens associated with animal bites include *Pasteurella* spp, *Francisella tularensis*,[143,144] *Staphylococcus* spp, *Streptococcus* spp, *Capnocytophaga canimorsus*, *Bartonella henselae* (etiology of cat scratch disease), and *Streptobacillus moniliformis* (etiology of rat bite fever).[145] Certain monkey species (especially macaques) that are kept as pets or used in public exhibits can be infected with B virus (formerly known as cercopithecine herpesvirus 1). Infected monkeys are often subclinically infected or have mild oral lesions, yet human infection from monkey bites or exposure to bodily fluids can result in fatal meningoencephalitis.[146,147]

Skin contact with animals in public settings also is a public health concern. In 1995, 15 cases of ringworm (also called club lamb fungus) caused by *Trichophyton* spp and *Microsporum gypseum* were reported among owners and family members who exhibited lambs in Georgia.[148] In 1986, ringworm in 23 persons and multiple animal species was traced to a *Microsporum canis* infection in a hand-reared tiger cub at a zoo.[149] Infection with orf virus (the causative agent of contagious ecthyma or sore mouth in sheep and goats) has developed in children after contact with sheep in a public

setting.[150] Orf virus infection has also been described in goats and sheep at a children's petting zoo[151] and in a lamb used for an Easter photo opportunity.[k] Transmission of pox viruses in public settings also has been described. In the 1970s, after handling various species of infected exotic animals, a zoo attendant experienced an extensive papular skin rash from a cowpox-like virus.[152] Cowpox virus transmission from rats to humans was also reported among persons who had purchased rats as pets or had contact with them at pet stores.[153] In 2003, multiple cases of monkeypox occurred among persons who contacted infected prairie dogs either at a child-care center[154,155] or a pet store.[l] Aquatic animals and their environments also have been associated with cutaneous infections[156]; for example, *Mycobacterium marinum* infections have been described among persons who owned or had cleaned fish tanks.[157,158]

Ectoparasites and endoparasites pose concerns when humans and exhibit animals interact. *Sarcoptes scabiei* is a skin mite that infests humans and animals, including swine, dogs, cats, foxes, cattle, and coyotes.[159,160] Although human infestation from animal sources is usually self-limiting, skin irritation and itching might occur for multiple days and can be difficult to diagnose.[160,161] Bites from avian mites have been reported in association with pet gerbils in school settings.[162] Animal fleas that bite humans increase the risk for infection or allergic reaction. In addition, fleas can carry a tapeworm species that can infect children if the flea is swallowed.[163,164] Other animal parasites also can infect humans who ingest materials contaminated with animal feces or who ingest or otherwise come into contact with contaminated soil. Parasite control through veterinary care and proper husbandry combined with hand washing reduces the disease risks associated with ectoparasites and endoparasites.[165]

Tuberculosis is another disease concern for certain animal settings. In 1996, 12 circus elephant handlers at an exotic animal farm in Illinois were infected with *Mycobacterium tuberculosis*; 1 handler had signs consistent with active disease after 3 elephants died of tuberculosis. Medical history and testing of the handlers indicated that the elephants had been a probable source of exposure for most of the infections in humans.[166] During 1989 through 1991 at a zoo in Louisiana, 7 animal handlers who previously tested negative for tuberculosis tested positive after a *Mycobacterium bovis* outbreak in rhinoceroses and monkeys.[167] Other instances of transmission of mycobacterial species from animals to animal care staff without known transmission to the public have also been documented.[168–170] The USDA has adopted guidelines regarding removal of tuberculosis-infected animals from public settings.[171]

Zoonotic pathogens also can be transmitted by direct or indirect contact with reproductive tissues or fluids, aborted fetuses, or newborns from infected dams. Live-birthing exhibits, usually involving livestock (eg, cattle, pigs, goats, or sheep), are popular at agricultural fairs. Although the public usually does not have direct contact with animals during birthing, newborns and their dams might be available for contact afterward. *Coxiella burnetii* infection (ie, Q fever), leptospirosis, listeriosis, brucellosis, and chlamydiosis are serious zoonoses that can be acquired through contact with reproductive tissues or associated fluids.[172]

The cause of Q fever is a rickettsial organism that most frequently infects cattle, sheep, and goats. The disease can cause abortion in animals, but more frequently, the infection is subclinical. During birthing, infected animals shed large numbers of organisms, which can become aerosolized. Most persons exposed to *C burnetii* develop an asymptomatic infection, but clinical illness can range from acute influenza-like illness to life-threatening endocarditis. In 2009, an outbreak of Q fever with > 30 cases was associated with public lamb-viewing days at a sheep farm in the Netherlands.[173] A Q fever outbreak involving 95 confirmed cases of the disease and 41 hospitalizations was linked to goats and sheep giving birth at petting zoos in indoor shopping malls.[m] Indoor-birthing exhibits might pose an increased risk for Q fever transmission because of inadequate ventilation.

Chlamydophila psittaci infections cause respiratory disease and are usually acquired from psittacine birds.[174] An outbreak of pneumonia caused by *C psittaci* infection occurred among staff members at Copenhagen Zoological Garden.[175] On rare occasions, chlamydial infections acquired from sheep, goats, and birds result in reproductive problems in women.[174,176,177]

In 2012, an outbreak of lymphocytic choriomeningitis virus infections occurred in employees of a rodent breeding facility in Indiana; 9 cases of infection in humans were identified.[103] Symptoms ranged from influenza-like illness to severe meningitis requiring hospitalization. Investigations to trace the infection to its source identified another rodent breeding facility in Kentucky where there was 1 sick employee, and 41% of employees had serologic evidence of infection. Further tracing identified > 500 pet stores and other animal care facilities that had received potentially infected mice; although no human illnesses were reported by pet store employees or customers, thousands of people had exposure to these mice, and the outbreak underscores the importance of awareness of diseases that can be transmitted by rodents and of measures to prevent these diseases.

Additional Health Concerns

Although infectious diseases are the most commonly reported health problems associated with animals in public settings, other health risks exist. Injuries associated with animals are a commonly reported and important problem. For example, dog bites are a substantial community problem for which specific guidelines have been written.[178] Injuries associated with animals in public settings include bites, kicks, falls, scratches, stings, crushing of the hands or feet, and being pinned between the animal and a fixed object. These injuries have been associated with large cats (eg, tigers), monkeys, and other wild, zoo, or domestic animals. Settings have included public stables, petting zoos, traveling photo opportunities, schools, children's parties, dog parks, and animal rides.[k,n–p] For example, a Kansas teenager was killed while posing for a photograph with a tiger being restrained by its

handler at an animal sanctuary.[179] In Texas, 2 high school students were bitten by a cottonmouth snake that was used in a science class after being misidentified as a nonvenomous species.[q] Also, allergies can be associated with animal dander, scales, fur, feathers, urine, and saliva.[180–186]

Guidelines for Disease Prevention

Guidelines from multiple organizations were used to create the recommendations in this report.[187–189] Although no US federal laws address the risk for transmission of pathogens at venues where the public has contact with animals, some states have such laws.[82,86,190–193] For example, in 2005, North Carolina enacted legislation requiring persons displaying animals for public contact at agricultural fairs to obtain a permit from the North Carolina Department of Agriculture and Consumer Services.[193]

Certain federal agencies and associations in the United States have developed standards, recommendations, and guidelines for reducing risks associated with animal contact by the public. The Association of Zoos and Aquariums has accreditation standards requiring training of staff on the risks of zoonotic diseases, including those associated with public contact.[194] In accordance with the Animal Welfare Act, the USDA licenses and inspects certain animal exhibits. These inspections primarily address humane treatment but also impact the health of the animal and safety of the public. In 2001, the CDC issued guidelines to reduce the risk for infection with enteric pathogens associated with farm visits.[85] The CDC has also issued recommendations for preventing transmission of *Salmonella* from reptiles, amphibians, and live poultry to humans[45,91,93,99,101,195]; educational posters are available online in a variety of sizes and languages.[196] The Association for Professionals in Infection Control and Epidemiology and the Animal-Assisted Interventions Working Group have developed guidelines to address risks associated with the use of animals in health-care settings.[6,8] The NASPHV has developed compendia of measures to reduce risks for human exposure to *C psittaci* and rabies virus.[174,197]

Studies[79,198–200,r] in multiple localities have suggested that implementation of recommendations in this compendium by members of the public and managers or employees of animal contact venues remains incomplete. Stakeholders should strive to achieve comprehensive implementation of the recommendations in this compendium.

Recommendations for managing public-animal contact—The recommendations in this report were developed for settings in which direct animal contact is encouraged (eg, petting zoos, educational farms or agritourism venues, and camps) and in which animal contact is possible (eg, agricultural fairs, feed stores, and animal swap meets). They should be tailored to specific settings and incorporated into guidelines and regulations developed at the state or local level. Contact with animals should only occur in settings where measures are in place to reduce the potential for disease transmission or injuries. Incidents or problems should be investigated, documented, and reported.

Recommendations for local, state, and federal agencies—Communication and cooperation among human and animal health agencies should be enhanced and include veterinarians and cooperative extension offices. Additional research should be conducted regarding the risk factors and effective prevention and control methods for health issues associated with animal contact. To enhance uptake of these recommendations, agencies should take the following steps:

- Disseminate this compendium to cooperative extension personnel, venue operators, veterinarians, and others associated with managing animals in public settings. States should strive to develop a complete list of public animal contact venues to facilitate dissemination of recommendations.
- Disseminate educational and training materials to venue operators and other stakeholders. Material formats could include computerized slide presentations, videos, and written guidelines.[195]
- Encourage or require oversight to ensure compliance with recommendations at animal contact venues.

To evaluate and improve these recommendations, surveillance for human health issues associated with animal contact should be enhanced. Agencies should take the following steps:

- Conduct thorough epidemiological investigations of outbreaks.
- Include questions on disease report forms and outbreak investigation questionnaires about exposure to animals, animal environments, and animal products and feed.
- Follow appropriate protocols for collection and testing of samples from humans, animals, and the environment, including molecular subtyping of pathogen isolates.
- Report outbreaks to state public health departments.
- Local and state public health departments should also report all outbreaks of enteric infections resulting from animal contact to the CDC through the National Outbreak Reporting System (www.cdc.gov/nors/).

Recommendations for venue operators and staff—Staff and visitor education, attention to hygiene, and appropriate facility design as well as proper care and monitoring of animals and their enclosures are essential components for reduction of risks associated with animal contact in public settings.

Education

Education is critical not only at traditional animal venues like petting zoos, but also at retail venues where live animals are sold to the public (eg, pet stores or feed stores). Experience from outbreaks suggests that visitors knowledgeable about potential risks are less likely to become ill.[21] Interventions that have been shown to improve hand hygiene compliance include having venue staff provide verbal hand hygiene reminders to guests before they leave the animal area, use of improved signage (ie, larger signs with more prominent

messages) combined with staff actively offering hand sanitizer[198] (although it should be noted that washing hands with soap and water is still preferred[7]), and having a staff member present within or at the exit to the animal contact area.[200] Even in well-designed venues with operators who are aware of the risks for disease, outbreaks and injuries can occur when visitors do not understand risks and therefore are less likely to apply disease-prevention measures. Mail-order hatcheries, agricultural feed stores, and other venues that sell or display chicks, ducklings, and other live poultry should provide health-related information to owners and potential purchasers of these birds. This should include information about the risk of acquiring *Salmonella* infection from contact with live poultry and how to prevent such infections. Other venues that sell live animals, such as pet stores, should also provide educational materials to customers about the risk of illness and prevention of zoonotic infections along with information on how to properly care for the animal. This is especially important for animals considered to have a high risk of transmitting disease to humans, including reptiles, amphibians, and live poultry. Free educational materials are available in multiple formats and in multiple languages at the CDC website (www.cdc.gov/zoonotic/gi).

Venue operators should take the following steps:

- Become familiar with and implement the recommendations in this compendium.
- Consult with veterinarians, state and local agencies, and cooperative extension personnel on implementation of the recommendations.
- Become knowledgeable about the risks for disease and injury associated with animals and be able to explain risk-reduction measures to staff members and visitors.
- Be aware that direct contact with some animals is inappropriate in public settings, and this should be evaluated separately for different audiences. For example, direct public contact with ill animals is inappropriate for any audience. In addition, preweaned calves, reptiles, amphibians, and live poultry should not have direct contact with children < 5 years of age. Other animals for which contact is of increased concern include other ruminants (eg, goats and sheep). Reptiles and amphibians should not be given as prizes at fairs, carnivals, or other events. Direct contact with dangerous animals (eg, nonhuman primates, certain carnivores, other species that may serve as reservoirs for rabies, and venomous reptiles [more completely described in the Animal Care and Management section]) should be completely prohibited.
- Develop or obtain training and educational materials and train staff members.
- Ensure that visitors receive educational messages before they enter the exhibit, including information that animals can cause injuries or carry organisms that can cause serious illness (**Appendix 1; Figure 1**).
- Provide information in a simple and easy-to-understand format that is age and language appropriate.
- Provide information in multiple formats (eg, signs, stickers, handouts, and verbal information) and languages.
- Provide information to persons arranging school field trips or classroom exhibits so that they can educate participants and parents before the visit.

Venue staff members should take the following steps:

- Become knowledgeable about the risks for disease and injury associated with animals and be able to explain risk-reduction recommendations to visitors.
- Ensure that visitors receive educational messages regarding risks and prevention measures.
- Encourage compliance by the public with risk-reduction recommendations, especially compliance with hand-washing procedures as visitors exit animal areas (**Appendix 2; Figure 2**).
- Comply with local and state requirements for reporting animal bites or other injuries.

Facility design

The design of facilities and animal pens should minimize the risk associated with animal contact (**Figure 3**), including limiting direct contact with manure and encouraging hand washing (Appendix 2). The design of facilities or contact settings might include double barriers to prevent contact with animals or contaminated surfaces except in specified animal interaction areas. Contact with fecal material or soiled bedding in animal pens increases risk of exposure to pathogens. Facility designs and policies that limit or prevent this type of exposure, especially to young children or other individuals who may be at increased risk of infection, are preferred.

Previous outbreak investigations have revealed that temporary exhibits are often not designed appropriately. Common problems include inadequate barriers, floors and other surfaces that are difficult to keep clean and to disinfect, insufficient plumbing, lack of signs regarding risk and prevention measures, and inadequate hand-washing facilities.[20,21,28,52] Specific guidelines might be necessary for certain settings, such as schools (**Appendix 3**).

Figure 1—Suggested sign or handout for use in safety education of visitors entering animal areas of petting zoos or other exhibits. Available at: www.nasphv.org/documentsCompendiaAnimals.html. Accessed Sep 10, 2013.

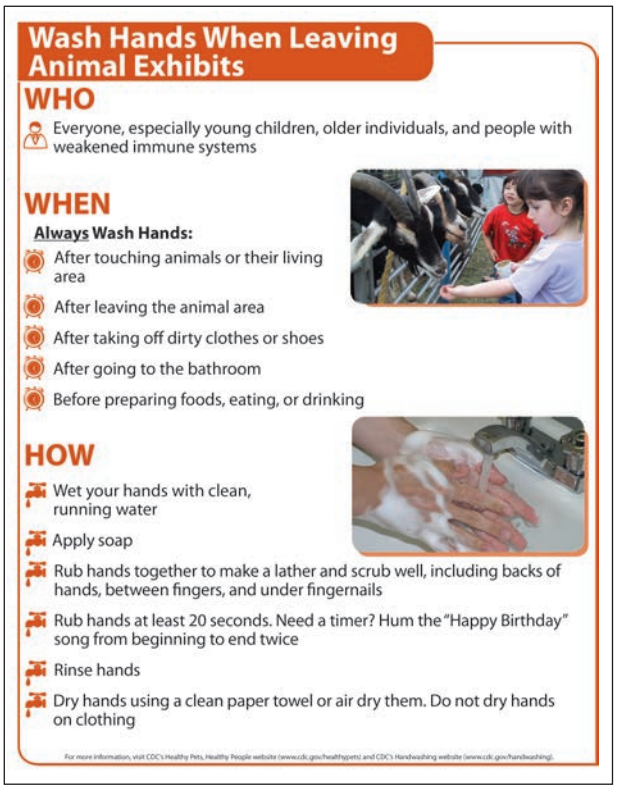

Figure 2—Suggested sign to encourage compliance with hand-washing procedures as a means of reducing the possible spread of infectious disease. Available in several languages at: www.cdc.gov/healthypets/resources/posters.htm. Accessed Sep 27, 2013.

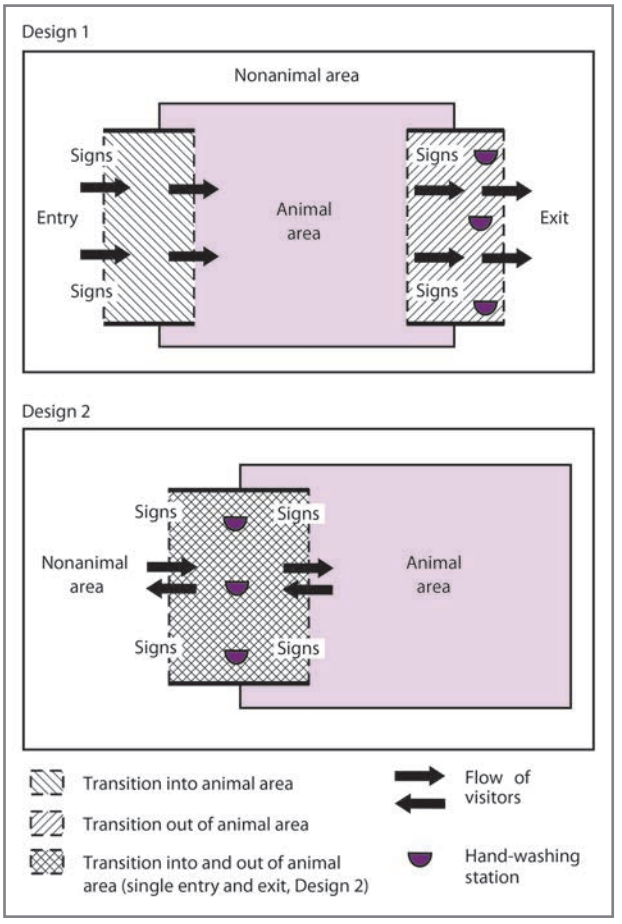

Figure 3—Examples of 2 designs for facilities in animal exhibit areas, including clearly designated animal areas, nonanimal areas, and transition areas with hand-washing stations and signs.

Recommendations for cleaning and disinfection should be tailored to the specific situation. All surfaces should be cleaned thoroughly to remove organic matter before disinfection. A 1:32 dilution of household bleach (eg, 1/2 cup of bleach for each gallon of water) is needed for basic disinfection. Quaternary ammonium compounds also can be used in accordance with the manufacturer label. For disinfection when a particular organism has been identified, additional guidance is available at the Iowa State University Center for Food Security and Public Health website (www.cfsph.iastate.edu/disinfection/). Most compounds require > 10 minutes of contact time with a contaminated surface to achieve the desired result.

Venues should be divided into 3 types of areas: nonanimal areas (where animals are not permitted, with the exception of service animals), transition areas (located at entrances and exits to animal areas), and animal areas (where animal contact is possible or encouraged; Figure 3).

Recommendations for nonanimal areas are as follows:

- Do not permit animals, except for service animals, in nonanimal areas.
- Store, prepare, serve, or consume food and beverages only in nonanimal areas.
- Provide hand-washing facilities and display hand-washing signs where food or beverages are served (Appendix 2; Figure 2).

The following steps are recommended for management of transition areas between nonanimal and animal areas. Establishing transition areas through which visitors pass when entering and exiting animal areas is critical. For areas where animal contact is encouraged, a 1-way flow of visitors is preferred, with separate entrance and exit points. The transition areas should be designated as clearly as possible, even if they are conceptual rather than physical (Figure 3).

Entrance transition areas should be designed to facilitate education:

- Post signs or otherwise notify visitors that they are entering an animal area and that there are risks associated with animal contact (Figure 1).
- Instruct visitors not to eat, drink, smoke, place their hands in their mouth, or use bottles or pacifiers while in the animal area.
- Establish storage or holding areas for strollers and related items (eg, wagons and diaper bags).
- Control visitor traffic to prevent overcrowding.

Exit transition areas should be designed to facilitate hand washing:

- Post signs or otherwise instruct visitors to wash their hands when leaving the animal area.
- Provide accessible hand-washing stations for all visitors, including children and persons with disabilities (Figure 3).

- Position venue staff members near exits to encourage compliance with proper hand washing.

Recommendations for animal areas are as follows:

- Do not allow consumption of food and beverages in these areas.
- Do not allow toys, pacifiers, spill-proof cups, baby bottles, strollers, or similar items to enter the area.
- Prohibit smoking and other tobacco product use.
- Supervise children closely to discourage hand-to-mouth activities (eg, nail biting and thumb sucking), contact with manure, and contact with soiled bedding. Children should not be allowed to sit or play on the ground in animal areas. If hands become soiled, supervise hand washing immediately.
- Ensure that regular animal feed and water are not accessible to the public.
- Allow the public to feed animals only if contact with animals is controlled (eg, with barriers).
- Do not provide animal feed in containers that can be eaten by humans (eg, ice cream cones) to decrease the risk of children eating food that has come into contact with animals.
- Promptly remove manure and soiled animal bedding from these areas.
- Assign trained staff members to encourage appropriate human-animal interactions, identify and reduce potential risks for patrons, and process reports of injuries and exposures.
- Store animal waste and specific tools for waste removal (eg, shovels and pitchforks) in designated areas that are restricted from public access.
- Avoid transporting manure and soiled bedding through nonanimal areas or transition areas. If this is unavoidable, take precautions to prevent spillage.
- Where feasible, disinfect the area (eg, flooring and railings) at least once daily.
- Provide adequate ventilation both for animals[201] and humans.
- Minimize the use of animal areas for public activities (eg, weddings and dances). If areas previously used for animals must be used for public events, they should be cleaned and disinfected, particularly if food and beverages are served.
- For birds in bird encounter exhibits, refer to the NASPHV psittacosis compendium[174] for recommendations regarding disease prevention and control.
- Visitors to aquatic touch tank exhibits who have open wounds should be advised not to participate. Hand-washing stations should be provided.
- When animals or animal products (eg, pelts, animal waste, and owl pellets) are used for educational purposes, only use them in designated animal areas. Animals and animal products should not be brought into school cafeterias and other areas where food and beverages are stored, prepared, served, or consumed.
- When animals are in school classrooms, specific areas must be designated for animal contact (Appendix 3). These areas must be thoroughly cleaned after use. Parents should be informed of the presence of animals as well as the benefits and potential risks associated with animals in school classrooms.

Animal Care and Management

The risk for disease or injury from animal contact can be reduced by carefully managing the specific animals used. The following recommendations should be considered for management of animals in contact with the public.

Animal care—Monitor animals daily for signs of illness and ensure that animals receive appropriate veterinary care. Ill animals, animals known to be infected with a zoonotic pathogen, and animals from herds with a recent history of abortion, diarrhea, or respiratory disease should not be exhibited. To decrease shedding of pathogens, animals should be housed in a manner to minimize stress and overcrowding.

Veterinary care—Retain and use the services of a licensed veterinarian. Preventive care, including vaccination and parasite control, appropriate for the species should be provided. When required, certificates of veterinary inspection from an accredited veterinarian should be up to date according to local or state requirements for animals in public settings. A herd or flock inspection is a critical component of the health certification process. Routine screening for diseases is not recommended, except for *C psittaci* infection in birds in encounter exhibits,[174] tuberculosis in elephants[169] and primates, and Q fever in ruminants in birthing exhibits.[202]

Rabies—All animals should be housed to reduce potential exposure to wild animals that may serve as rabies virus reservoirs. Mammals should also be up to date on rabies vaccinations according to current recommendations.[197] These steps are particularly critical in areas where rabies is endemic and in venues where animal contact is encouraged (eg, petting zoos). Because of the extended incubation period for rabies, unvaccinated mammals should be vaccinated at least 1 month before they have contact with the public. If no licensed rabies vaccine exists for a particular species (eg, goats, swine, llamas, and camels) that is used in a setting where public contact occurs, consultation with a veterinarian regarding extralabel use of rabies vaccine is recommended. A vaccine administered in an extralabel manner does not provide the same degree of assurance as a vaccine labeled for use in a particular species; however, extralabel use of rabies vaccine might provide protection for certain animals and thus decrease the probability of rabies transmission.[197] Vaccination of slaughter-class animals prior to their display at fairs might not be feasible because of the vaccine withdrawal period that occurs as a result of antimicrobials used as preservatives in certain vaccines. Mammals that are too young to be vaccinated should be used in exhibit settings only if additional restrictive measures are available to reduce risks (eg, use only animals that were born to vaccinated mothers and housed to avoid rabies exposure). In animal contact settings, rabies testing should be considered for animals that die suddenly.

Dangerous animals—Because of their strength, unpredictability, or venom, or the pathogens that they might carry, certain domestic, exotic, or wild animals should be prohibited from exhibition settings where a

reasonable possibility of animal contact exists. Species of primary concern include nonhuman primates (eg, monkeys and apes) and certain carnivores (eg, lions, tigers, ocelots, wolves and wolf hybrids, and bears). In addition, direct contact with species known to serve as reservoirs for rabies virus (eg, bats, raccoons, skunks, foxes, and coyotes) should not be permitted.

Animal births—Ensure that the public has no contact with newly born animals or birthing by-products (eg, the placenta). In live-birth exhibits, the environment should be thoroughly cleaned after each birth, and all waste products should be properly discarded. Holding such events outdoors or in well-ventilated areas is preferable.

Additional Recommendations

The following recommendations are applicable to all individuals concerned with minimizing risks associated with animal contact in public settings.

Populations at high risk of serious infection—The risk of serious infection is particularly high in children < 5 years of age. Other groups that have an increased degree of risk include persons with waning immunity (eg, persons ≥ 65 years of age) and those who are mentally impaired, pregnant, or immunocompromised (eg, persons with HIV infection or AIDS, without a functioning spleen, or receiving immunosuppressive therapy). Individuals at high risk for serious infection should take heightened precautions or avoid animal exhibits. In addition to thorough and frequent hand washing, heightened precautions could include avoiding contact with animals and their environment. Direct contact with some animals is inappropriate in public settings, depending on expected audiences. Use of chicks, other live poultry, reptiles, and amphibians is not appropriate in nursing homes, schools or day cares, or other venues that are intended for children < 5 years of age or other groups at high risk for serious infection; in addition, some other animals with which contact is of increased concern for these groups include preweaned calves, other young ruminants, and any ill animals.

Influenza—In response to the influenza A (H3N2) variant virus outbreaks associated with swine at agricultural fairs in 2011 through 2012, the following prevention strategies were recommended.[137,140] First, all people should take routine preventive actions (eg, hand hygiene) at fairs to reduce potential transmission between pigs and people; second, people at high risk of serious influenza-related complications should avoid exposure to pigs at fairs; and third, measures should be taken to reduce the presence of pigs with clinical signs of disease at these events. It has been shown that apparently healthy pigs can carry variant influenza viruses.[140] Potential strategies to mitigate the risk for intra- and interspecies transmission of influenza viruses at agricultural fairs include shortening the swine exhibition period, preventing movement of pigs among fairs, and appropriate vaccination of exhibition swine for influenza A viruses.[140] More detailed and current recommendations for fairs can be found at the NASPHV website (www.nasphv.org/Documents/NASAHO-NASPHV-InfluenzaTransmissionAtSwineExhibitions2013.pdf).

Consumption of unpasteurized products—Prohibit the consumption of unpasteurized or raw dairy products (eg, milk, cheese, and yogurt) and unpasteurized cider or juices.

Drinking water—Local public health authorities should inspect drinking water systems before use. Only potable water should be used for consumption by animals and humans. Backflow prevention devices should be installed between outlets in livestock areas and water lines supplying other areas on the grounds. If the water supply is from a well, adequate distance should be maintained from possible sources of contamination (eg, animal holding areas and manure piles). Maps of the water distribution system should be available for use in identifying potential or actual problems. The use of outdoor hoses should be minimized, and hoses should not be left on the ground. Hoses that are accessible to the public should be labeled to indicate the water is not for human consumption. Operators and managers of settings in which treated municipal water is not available should ensure that a safe water supply (eg, bottled water) is available.

---

a. Croft D, Archer J, Roberts C. Outbreak of *Escherichia coli* O157:H7 infections associated with a pancake breakfast served in a stock pavilion with contaminated livestock bedding—Wisconsin, 2001 (abstr), in *Proceedings*. 51st Annu Epidemic Intelligence Service Conf 2002;74–75.
b. Keene W, deBroekert M, Gillette K. A large *Escherichia coli* O157:H7 outbreak at a county fair (abstr), in *Proceedings*. Int Conf Emerg Infect Dis 2004;77.
c. Soderlund D, Smith K, Bender J, et al. An epidemiologic investigation of cryptosporidiosis in Minnesota (abstr), in *Proceedings*. Int Conf Emerg Infect Dis 2000;148–149.
d. Chertow D, Gupta S, Ginzl D, et al. Outbreak of *Escherichia coli* O157:H7 related to direct and indirect animal contact in petting zoos—Florida, 2005 (abstr), in *Proceedings*. 55th Annu Epidemic Intelligence Service Conf 2006;36.
e. Durso L, Keen J, Bauer N Jr. Assessment of three remediation strategies for reduction of Shigatoxigenic *Escherichia coli* (STEC) O157 in naturally contaminated soil (abstr), in *Proceedings*. Institute Food Technol Annu Meet Food Expo 2007. Available at: www.ars.usda.gov/research/publications/publications.htm?seq_no_115=207142. Accessed Sep 10, 2013.
f. Coronado F, Johnson G, Kacica M, et al. A large outbreak of cryptosporidiosis and *Escherichia coli* O111 infections associated with consumption of unpasteurized apple cider—New York, 2004 (abstr) in *Proceedings*. 54th Annu Epidemic Intelligence Service Conf 2005;37.
g. Saupe A, Fowler H, Anderson F, et al. *E coli* O111 *Cryptosporidium* infections associated with raw apple cider at an apple orchard (poster presentation). OutbreakNet Meet, Atlanta, Ga, August 2012.
h. Brown C, Massachusetts Department of Public Health, Jamaica Plain, Mass: Personal communication, 2008.
i. Slavinski S, New York City Department of Health and Mental Hygiene, New York, NY: Personal communication, 2010.
j. Wright JH, Texas Department of Health, Tyler, Tex: Personal communication, 2004.
k. Eidson M, New York State Department of Health, Albany, NY: Personal communication, 2003.
l. Kazmierczak JJ, Wisconsin Department of Health and Family Services, Madison, Wis: Personal communication, 2004.
m. Milford F, Vibien A, Lambert L, et al. Large Q-fever outbreak related to exposure to petting zoos in two shopping malls (oral presentation). 51st Annu Conf Dis Nat Transmissible Man, Austin, Tex, May–June 2001.

n. Bender JB, University of Minnesota, Saint Paul, Minn: Personal communication, 2003.
o. Jay-Russell MT, California Department of Health, Sacramento, Calif: Personal communication, 2003.
p. Swinger GL, Tennessee Department of Health, Nashville, Tenn: Personal communication, 2003.
q. Garvin W, Caldwell Zoo, Tyler, Tex: Personal communication, 2008.
r. Singleton S, Poole S, Scheftel J, et al. Observational study regarding incorporation of measures to prevent disease outbreaks associated with animals in public settings (abstr), in *Proceedings*. Int Conf Emerg Infect Dis 2008;133.

References

1. NASPHV. Compendium of measures to prevent disease associated with animals in public settings, 2005. *MMWR Recomm Rep* 2005;54:1–12.
2. NASPHV, CDC. Compendium of measures to prevent disease associated with animals in public settings, 2011: National Association of State Public Health Veterinarians, Inc. *MMWR Recomm Rep* 2011;60:1–24.
3. Steinmuller N, Demma L, Bender J, et al. Outbreaks of enteric disease associated with animal contact: not just a foodborne problem anymore. *Clin Infect Dis* 2006;43:1596–1602.
4. Duncan SL. APIC state-of-the-art report: the implications of service animals in health care settings. *Am J Infect Control* 2000;28:170–180.
5. Guay DRP. Pet-assisted therapy in the nursing home setting: potential for zoonosis. *Am J Infect Control* 2001;29:178–186.
6. Lefebvre SL, Golab GC, Christensen EL, et al. Guidelines for animal-assisted interventions in health care facilities. *Am J Infect Control* 2008;36:78–85.
7. Scheftel JM, Elchos BL, Cherry B, et al. Compendium of veterinary standard precautions for zoonotic disease prevention in veterinary personnel: National Association of State Public Health Veterinarians Veterinary Infection Control Committee 2010. *J Am Vet Med Assoc* 2010;237:1403–1422.
8. Sehulster L, Chinn R. Guidelines for environmental infection control in health-care facilities: recommendations of CDC and the Healthcare Infection Control Practices Advisory Committee (HICPAC) (Errata published in *MMWR Recomm Rep* 2003;52:1025). *MMWR Recomm Rep* 2003;52:1–42.
9. National Institute for Occupational Safety and Health. Veterinary Safety and Health. Available at: www.cdc.gov/niosh/topics/veterinary/. Accessed Jun 21, 2013.
10. Hale CR, Scallan E, Cronquist AB, et al. Estimates of enteric illness attributable to contact with animals and their environments in the United States. *Clin Infect Dis* 2012;54(suppl 5):S472–S479.
11. LeJeune JT, Davis MA. Outbreaks of zoonotic enteric disease associated with animal exhibits. *J Am Vet Med Assoc* 2004;224:1440–1445.
12. Bell BP, Goldoft M, Griffin PM, et al. A multistate outbreak of *Escherichia coli* O157:H7—associated bloody diarrhea and hemolytic uremic syndrome from hamburgers. The Washington experience. *JAMA* 1994;272:1349–1353.
13. Chappell CL, Okhuysen PC, Sterling CR, et al. *Cryptosporidium parvum*: intensity of infection and oocyst excretion patterns in healthy volunteers. *J Infect Dis* 1996;173:232–236.
14. Tilden J Jr, Young W, McNamara AM, et al. A new route of transmission for *Escherichia coli*: infection from dry fermented salami. *Am J Public Health* 1996;86:1142–1145.
15. Chapman P, Cornell J, Green C. Infection with verocytotoxin-producing *Escherichia coli* O157 during a visit to an inner city open farm. *Epidemiol Infect* 2000;125:531–536.
16. Crump JA, Sulka AC, Langer AJ, et al. An outbreak of *Escherichia coli* O157:H7 infections among visitors to a dairy farm. *N Engl J Med* 2002;347:555–560.
17. David S, MacDougall L, Louie K, et al. Petting zoo-associated *Escherichia coli* O157:H7-secondary transmission, asymptomatic infection, and prolonged shedding in the classroom. *Can Commun Dis Rep* 2004;30:173–180.
18. Durso LM, Reynolds K, Bauer N Jr, et al. Shiga-toxigenic *Escherichia coli* O157:H7 infections among livestock exhibitors and visitors at a Texas county fair. *Vector Borne Zoonotic Dis* 2005;5:193–201.
19. Evans M, Gardner D. Cryptosporidiosis outbreak associated with an educational farm holiday (Erratum published in *Commun Dis Rep CDR Rev* 1996;6:R67). *Commun Dis Rep CDR Rev* 1996;6:R50–R51.
20. Friedman CR, Torigian C, Shillam PJ, et al. An outbreak of salmonellosis among children attending a reptile exhibit at a zoo. *J Pediatr* 1998;132:802–807.
21. Goode B, O'Reilly C, Dunn J, et al. Outbreak of *Escherichia coli* O157:H7 infections after petting zoo visits, North Carolina State Fair, October–November 2004. *Arch Pediatr Adolesc Med* 2009;163:42–48.
22. Kiang K, Scheftel J, Leano F, et al. Recurrent outbreaks of cryptosporidiosis associated with calves among students at an educational farm programme, Minnesota, 2003. *Epidemiol Infect* 2006;134:878–886.
23. Pritchard G, Carson T, Willshaw G, et al. Verocytotoxin-producing *Escherichia coli* O157 on a farm open to the public: outbreak investigation and longitudinal bacteriological study. *Vet Rec* 2000;147:259–264.
24. Sayers G, Dillon M, Connolly E, et al. Cryptosporidiosis in children who visited an open farm. *Commun Dis Rep CDR Rev* 1996;6:R140–R144.
25. Shukla R, Slack R, George A, et al. *Escherichia coli* O157 infection associated with a farm visitor centre. *Commun Dis Rep CDR Rev* 1995;5:R86–R90.
26. Smith KE, Stenzel SA, Bender JB, et al. Outbreaks of enteric infections caused by multiple pathogens associated with calves at a farm day camp. *Pediatr Infect Dis J* 2004;23:1098–1104.
27. Warshawsky B, Gutmanis I, Henry B, et al. Outbreak of *Escherichia coli* O157:H7 related to animal contact at a petting zoo. *Can J Infect Dis* 2002;13:175–181.
28. CDC. Outbreaks of *Escherichia coli* O157:H7 associated with petting zoos—North Carolina, Florida, and Arizona, 2004 and 2005. *MMWR Morb Mortal Wkly Rep* 2005;54:1277–1280.
29. CDC. Cryptosporidiosis outbreak at a summer camp—North Carolina, 2009. *MMWR Morb Mortal Wkly Rep* 2011;60:918–922.
30. CDC. Notes from the field: *Escherichia coli* O157:H7 gastroenteritis associated with a state fair—North Carolina, 2011. *MMWR Morb Mortal Wkly Rep* 2012;60:1745–1746.
31. Lanier WA, Hall JM, Herlihy RK, et al. Outbreak of shiga-toxigenic *Escherichia coli* O157:H7 infections associated with rodeo attendance, Utah and Idaho, 2009. *Foodborne Pathog Dis* 2011;8:1131–1133.
32. McGuigan CC, Steven K, Pollock KGJ. Cryptosporidiosis associated with wildlife center, Scotland. *Emerg Infect Dis* 2010;16:895–896.
33. Ihekweazu C, Carroll K, Adak B, et al. Large outbreak of verocytotoxin-producing *Escherichia coli* O157 infection in visitors to a petting farm in South East England, 2009. *Epidemiol Infect* 2012;140:1400–1413.
34. Brooks JT, Matyas BT, Fontana J, et al. An outbreak of *Salmonella* serotype Typhimurium infections with an unusually long incubation period. *Foodborne Pathog Dis* 2012;9:245–248.
35. CDC. Three outbreaks of salmonellosis associated with baby poultry from three hatcheries—United States, 2006. *MMWR Morb Mortal Wkly Rep* 2007;56:273–276.
36. Gaffga NH, Behravesh CB, Ettestad PJ, et al. Outbreak of salmonellosis linked to live poultry from a mail-order hatchery. *N Engl J Med* 2012;366:2065–2073.
37. Loharikar A, Briere E, Schwensohn C, et al. Four multistate outbreaks of human *Salmonella* infections associated with live poultry contact, United States, 2009. *Zoonoses Public Health* 2012;59:347–54.
38. Loharikar A, Vawter S, Warren K, et al. Outbreak of human *Salmonella* Typhimurium infections linked to contact with baby poultry from a single agricultural feed store chain and mail-order hatchery, 2009. *Pediatr Infect Dis J* 2013;32:8–12.
39. Fuller C, Jawahir S, Leano F, et al. A multi-state *Salmonella* Typhimurium outbreak associated with frozen vacuum-packed rodents used to feed snakes. *Zoonoses Public Health* 2008;55:481–487.
40. Harker K, Lane C, De Pinna E, et al. An outbreak of *Salmonella* Typhimurium DT191a associated with reptile feeder mice. *Epidemiol Infect* 2011;139:1254–1261.

41. CDC. Notes from the field: infections with *Salmonella* I 4,[5],12:i:-linked to exposure to feeder rodents—United States, August 2011–February 2012. *MMWR Morb Mortal Wkly Rep* 2012;61:277.
42. Swanson SJ, Snider C, Braden CR, et al. Multidrug-resistant *Salmonella enterica* serotype Typhimurium associated with pet rodents. *N Engl J Med* 2007;356:21–28.
43. Harris JR, Bergmire-Sweat D, Schlegel JH, et al. Multistate outbreak of *Salmonella* infections associated with small turtle exposure, 2007–2008. *Pediatrics* 2009;124:1388–1394.
44. CDC. Notes from the field: outbreak of salmonellosis associated with pet turtle exposures—United States, 2011. *MMWR Morb Mortal Wkly Rep* 2012;61:79.
45. CDC. Multistate outbreak of human *Salmonella* Typhimurium infections associated with aquatic frogs—United States, 2009. *MMWR Morb Mortal Wkly Rep* 2010;58:1433–1436.
46. CDC. Notes from the field: update on human *Salmonella* Typhimurium infections associated with aquatic frogs—United States, 2009–2011. *MMWR Morb Mortal Wkly Rep* 2011;60:628.
47. Mettee Zarecki S, Bennett S, Hall J, et al. U.S. outbreak of human *Salmonella* infections associated with aquatic frogs, 2008–2011. *Pediatrics* 2013;131:724–731.
48. CDC. Notes from the field: multistate outbreak of human *Salmonella* Typhimurium infections linked to contact with pet hedgehogs—United States, 2011–2013. *MMWR Morb Mortal Wkly Rep* 2013;62:73.
49. Keen JE, Elder RO. Isolation of shiga-toxigenic *Escherichia coli* O157 from hide surfaces and the oral cavity of finished beef feedlot cattle. *J Am Vet Med Assoc* 2002;220:756–763.
50. Doorduyn Y, Van Den Brandhof W, Van Duynhoven Y, et al. Risk factors for *Salmonella* Enteritidis and Typhimurium (DT104 and non-DT104) infections in The Netherlands: predominant roles for raw eggs in Enteritidis and sandboxes in Typhimurium infections. *Epidemiol Infect* 2006;134:617–626.
51. Varma JK, Greene KD, Reller ME, et al. An outbreak of *Escherichia coli* O157 infection following exposure to a contaminated building. *JAMA* 2003;290:2709–2712.
52. Payne CJI, Petrovic M, Roberts RJ, et al. Vero cytotoxin-producing *Escherichia coli* O157 gastroenteritis in farm visitors, North Wales. *Emerg Infect Dis* 2003;9:526–530.
53. De Schrijver K, Buvens G, Possé B, et al. Outbreak of verocytotoxin-producing *E. coli* O145 and O26 infections associated with the consumption of ice cream produced at a farm, Belgium, 2007. *Eur Surveill* 2008;13:61–64.
54. Djuretic T, Wall P, Nichols G. General outbreaks of infectious intestinal disease associated with milk and dairy products in England and Wales: 1992 to 1996. *Commun Dis Rep CDR Rev* 1997;7:R41–R45.
55. Korlath JA, Osterholm MT, Judy LA, et al. A point-source outbreak of campylobacteriosis associated with consumption of raw milk. *J Infect Dis* 1985;152:592–596.
56. Sharp JCM. Infections associated with milk and dairy products in Europe and North America, 1980–85. *Bull World Health Organ* 1987;65:397–406.
57. Bopp DJ, Sauders BD, Waring AL, et al. Detection, isolation, and molecular subtyping of *Escherichia coli* O157:H7 and *Campylobacter jejuni* associated with a large waterborne outbreak. *J Clin Microbiol* 2003;41:174–180.
58. Novello A. Public health dispatch: outbreak of *Escherichia coli* O157:H7 and *Campylobacter* among attendees of the Washington County Fair—New York, 1999. *MMWR Morb Mortal Wkly Rep* 1999;48:803–804.
59. Bruce-Grey-Owen Sound Health Unit. Waterborne outbreak of gastroenteritis associated with a contaminated municipal water supply, Walkerton, Ontario, May–June 2000. *Can Commun Dis Rep* 2000;26:170–173.
60. Keen JE, Wittum TE, Dunn JR, et al. Shiga-toxigenic *Escherichia coli* O157 in agricultural fair livestock, United States. *Emerg Infect Dis* 2006;12:780–786.
61. Kudva IT, Blanch K, Hovde CJ. Analysis of *Escherichia coli* O157:H7 survival in ovine or bovine manure and manure slurry. *Appl Environ Microbiol* 1998;64:3166–3174.
62. LeJeune JT, Besser TE, Hancock DD. Cattle water troughs as reservoirs of *Escherichia coli* O157. *Appl Environ Microbiol* 2001;67:3053–3057.
63. Maule A. Survival of verocytotoxigenic *Escherichia coli* O157 in soil, water and on surfaces. *Symp Ser Soc Appl Microbiol* 2000;29:71S–78S.
64. Rahn K, Renwick S, Johnson R, et al. Persistence of *Escherichia coli* O157:H7 in dairy cattle and the dairy farm environment. *Epidemiol Infect* 1997;119:251–259.
65. Randall LP, Wray C, Davies RH. Survival of verocytotoxin-producing *Escherichia coli* O157 under simulated farm conditions. *Vet Rec* 1999;145:500–501.
66. Béraud R, Huneault L, Bernier D, et al. Comparison of the selection of antimicrobial resistance in fecal *Escherichia coli* during enrofloxacin administration with a local drug delivery system or with intramuscular injections in a swine model. *Can J Vet Res* 2008;72:311–319.
67. Corrier D, Purdy C, DeLoach J. Effects of marketing stress on fecal excretion of *Salmonella* spp in feeder calves. *Am J Vet Res* 1990;51:866–869.
68. Hurd H, McKean J, Griffith R, et al. *Salmonella enterica* infections in market swine with and without transport and holding. *Appl Environ Microbiol* 2002;68:2376–2381.
69. Hurd HS, McKean JD, Wesley IV, et al. The effect of lairage on *Salmonella* isolation from market swine. *J Food Prot* 2001;64:939–944.
70. Isaacson RE, Firkins LD, Weigel RM, et al. Effect of transportation and feed withdrawal on shedding of *Salmonella* Typhimurium among experimentally infected pigs. *Am J Vet Res* 1999;60:1155–1558.
71. Marg H, Scholz HC, Arnold T, et al. Influence of long-time transportation stress on re-activation of *Salmonella* Typhimurium DT104 in experimentally infected pigs. *Berl Munch Tierarztl Wochenschr* 2001;114:385–388.
72. USDA APHIS. *Escherichia coli* O157 in United States feedlots. Available at: www.aphis.usda.gov/animal_health/nahms/feedlot/downloads/feedlot99/Feedlot99_is_Ecoli.pdf. Accessed Jun 21, 2013.
73. Williams L Jr, Newell K. *Salmonella* excretion in joy-riding pigs. *Am J Public Health Nations Health* 1970;60:926–929.
74. Webb C. Investigating the potential spread of infectious diseases of sheep via agricultural shows in Great Britain. *Epidemiol Infect* 2006;134:31–40.
75. Garber LP, Wells SJ, Hancock DD, et al. Risk factors for fecal shedding of *Escherichia coli* O157:H7 in dairy calves. *J Am Vet Med Assoc* 1995;207:46–49.
76. Hancock DD, Besser TE, Kinsel ML, et al. The prevalence of *Escherichia coli* O157:H7 in dairy and beef cattle in Washington State. *Epidemiol Infect* 1994;113:199–207.
77. Hancock DD, Besser TE, Rice DH, et al. A longitudinal study of *Escherichia coli* O157 in fourteen cattle herds. *Epidemiol Infect* 1997;118:193–195.
78. USDA APHIS. *Salmonella* in United States feedlots. Available at: www.aphis.usda.gov/animal_health/nahms/feedlot/downloads/feedlot99/Feedlot99_is_Salmonella.pdf. Accessed Jun 21, 2013.
79. McMillian M, Dunn JR, Keen JE, et al. Risk behaviors for disease transmission among petting zoo attendees. *J Am Vet Med Assoc* 2007;231:1036–1038.
80. Belongia EA, Chyou PH, Greenlee RT, et al. Diarrhea incidence and farm-related risk factors for *Escherichia coli* O157:H7 and *Campylobacter jejuni* antibodies among rural children. *J Infect Dis* 2003;187:1460–1468.
81. Keen JE, Durso LM, Meehan TP. Isolation of *Salmonella enterica* and Shiga-toxigenic *Escherichia coli* O157 from feces of animals in public contact areas of United States zoological parks. *Appl Environ Microbiol* 2007;73:362–365.
82. Bender JB, Shulman SA. Reports of zoonotic disease outbreaks associated with animal exhibits and availability of recommendations for preventing zoonotic disease transmission from animals to people in such settings. *J Am Vet Med Assoc* 2004;224:1105–1109.
83. Crump JA, Braden CR, Dey ME, et al. Outbreaks of *Escherichia coli* O157 infections at multiple county agricultural fairs: a hazard of mixing cattle, concession stands and children. *Epidemiol Infect* 2003;131:1055–1062.
84. Hoek MR, Oliver I, Barlow M, et al. Outbreak of *Cryptosporidium parvum* among children after a school excursion to an adventure farm, south west England. *J Water Health* 2008;6:333–338.

85. CDC. Outbreaks of *Escherichia coli* O157:H7 infections among children associated with farm visits—Pennsylvania and Washington, 2000. *MMWR Morb Mortal Wkly Rep* 2001;50:293–297.
86. Goode B, O'Reilly C. Outbreak of Shiga toxin producing *E. coli* (STEC) infections associated with a petting zoo at the North Carolina State Fair—Raleigh, North Carolina, November 2004, final report, 2005. Available at: epi.publichealth.nc.gov/cd/ecoli/figures/EColiReportFinal062905.pdf. Accessed Sep 6, 2013.
87. Hedican E, Miller B, Ziemer B, et al. Salmonellosis outbreak due to chicken contact leading to a foodborne outbreak associated with infected delicatessen workers. *Foodborne Pathog Dis* 2010;7:995–997.
88. Alelis K, Borkowski P, Fiorella P, et al. Outbreak of shiga toxin-producing *Escherichia coli* O157 infection associated with a day camp petting zoo—Pinellas County, Florida, May–June 2007. *MMWR Morb Mortal Wkly Rep* 2009;58:426–428.
89. Smith KE, Anderson F, Medus C, et al. Outbreaks of salmonellosis at elementary schools associated with dissection of owl pellets. *Vector Borne Zoonotic Dis* 2005;5:133–136.
90. CDC. Multistate outbreak of human *Salmonella* infections associated with exposure to turtles, United States, 2007–2008. *MMWR Morb Mortal Wkly Rep* 2008;57:69–72.
91. CDC. Reptile-associated salmonellosis—selected states, 1998–2002. *MMWR Morb Mortal Wkly Rep* 2003;52:1206–1209.
92. CDC. Turtle-associated salmonellosis in humans—United States, 2006–2007. *MMWR Morb Mortal Wkly Rep* 2007;56:649–652.
93. CDC. Multistate outbreak of human *Salmonella* Typhimurium infections associated with pet turtle exposure—United States, 2008. *MMWR Morb Mortal Wkly Rep* 2010;59:191–196.
94. Harris JR, Neil KP, Behravesh CB, et al. Recent multistate outbreaks of human Salmonella infections acquired from turtles: a continuing public health challenge. *Clin Infect Dis* 2010;50:554–559.
95. Lamm SH, Taylor A, Gangarosa EJ, et al. Turtle-associated salmonellosis I. An estimation of the magnitude of the problem in the United States, 1970–1971. *Am J Epidemiol* 1972;95:511–517.
96. Mermin J, Hutwagner L, Vugia D, et al. Reptiles, amphibians, and human *Salmonella* infection: a population-based, case-control study. *Clin Infect Dis* 2004;38:S253–S261.
97. Altman R, Gorman JC, Bernhardt LL, et al. Turtle-associated salmonellosis II. The relationship of pet turtles to salmonellosis in children in New Jersey. *Am J Epidemiol* 1972;95:518–520.
98. Bartlett KH, Trust T, Lior H. Small pet aquarium frogs as a source of *Salmonella*. *Appl Environ Microbiol* 1977;33:1026–1029.
99. Hedican E, Smith K, Jawahir S, et al. Multistate outbreaks of *Salmonella* infections associated with live poultry—United States, 2007. *MMWR Morb Mortal Wkly Rep* 2009;58:25–29.
100. Svitlik C, Cartter M, McCarter Y, et al. *Salmonella* Hadar associated with pet ducklings—Connecticut, Maryland, and Pennsylvania, 1991. *MMWR Morb Mortal Wkly Rep* 1992;41:185–187.
101. CDC. Salmonellosis associated with chicks and ducklings—Michigan and Missouri, Spring 1999. *MMWR Morb Mortal Wkly Rep* 2000;49:297–299.
102. CDC. *Salmonella* serotype Montevideo infections associated with chicks—Idaho, Washington, and Oregon, spring 1995 and 1996. *MMWR Morb Mortal Wkly Rep* 1997;46:237–239.
103. CDC. Notes from the field: lymphocytic choriomeningitis virus infections in employees of a rodent breeding facility—Indiana, May–June 2012. *MMWR Morb Mortal Wkly Rep* 2012;61:622–623.
104. USDA APHIS. National Poultry Improvement Plan and Auxiliary Provisions. Washington: 2011. Available at: www.nd.gov/ndda/files/resource/NPIPProvisionsAug16.pdf. Accessed Sep 9, 2013.
105. CDC. *Salmonella* outbreak reports, 2012. Available at: www.cdc.gov/salmonella/small-turtles-03-12/index.html. Accessed Sep 10, 2013.
106. Levings RS, Lightfoot D, Hall RM, et al. Aquariums as reservoirs for multidrug-resistant *Salmonella* Paratyphi B. *Emerg Infect Dis* 2006;12:507–510.
107. Musto J, Kirk M, Lightfoot D, et al. Multi-drug resistant *Salmonella* Java infections acquired from tropical fish aquariums, Australia 2003–04. *Commun Dis Intell Q Rep* 2006;30:222–227.
108. CDC. Epidemiologic notes and reports: aquarium-associated *Plesiomonas shigelloides* infection—Missouri. *MMWR Morb Mortal Wkly Rep* 1989;38:617–619.
109. Behravesh CB, Ferraro A, Deasy M, et al. Human *Salmonella* infections linked to contaminated dry dog and cat food, 2006–2008. *Pediatrics* 2010;126:477–483.
110. CDC. Notes from the field: human *Salmonella* Infantis infections linked to dry dog food—United States and Canada, 2012. *MMWR Morb Mortal Wkly Rep* 2012;61:436.
111. Human health risk from exposure to natural dog treats. *Can Commun Dis Rep* 2000;26:41–42.
112. Clark C, Cunningham J, Ahmed R, et al. Characterization of *Salmonella* associated with pig ear dog treats in Canada. *J Clin Microbiol* 2001;39:3962–3968.
113. Pitout JDD, Reisbig MD, Mulvey M, et al. Association between handling of pet treats and infection with *Salmonella enterica* serotype Newport expressing the AmpC beta-lactamase, CMY-2. *J Clin Microbiol* 2003;41:4578–4582.
114. CDC. Human salmonellosis associated with animal-derived pet treats—United States and Canada, 2005. *MMWR Morb Mortal Wkly Rep* 2006;55:702–705.
115. AVMA. Raw or undercooked animal-source protein in cat and dog diets, 2012. Available at: www.avma.org/KB/Policies/Pages/Raw-or-Undercooked-Animal-Source-Protein-in-Cat-and-Dog-Diets.aspx. Accessed Jun 21, 2013.
116. Voetsch A, Kennedy M, Keene W, et al. Risk factors for sporadic Shiga toxin-producing *Escherichia coli* O157 infections in FoodNet sites, 1999–2000. *Epidemiol Infect* 2007;135:993–1000.
117. Younus M, Wilkins M, Davies H, et al. The role of exposures to animals and other risk factors in sporadic, non-typhoidal *Salmonella* infections in Michigan children. *Zoonoses Public Health* 2010;57:e170–e176.
118. Kassenborg HD, Hedberg CW, Hoekstra M, et al. Farm visits and undercooked hamburgers as major risk factors for sporadic *Escherichia coli* O157:H7 infection: data from a case-control study in 5 FoodNet sites. *Clin Infect Dis* 2004;38:S271–S278.
119. O'Brien SJ, Adak GK, Gilham C. Contact with farming environment as a major risk factor for Shiga toxin (Vero cytotoxin)–producing *Escherichia coli* O157 infection in humans. *Emerg Infect Dis* 2001;7:1049–1051.
120. Haack JP, Jelacic S, Besser TE, et al. *Escherichia coli* O157 exposure in Wyoming and Seattle: serologic evidence of rural risk. *Emerg Infect Dis* 2003;9:1226–1231.
121. Hunter PR, Hughes S, Woodhouse S, et al. Sporadic cryptosporidiosis case-control study with genotyping. *Emerg Infect Dis* 2004;10:1241–1249.
122. Roy SL, DeLong SM, Stenzel SA, et al. Risk factors for sporadic cryptosporidiosis among immunocompetent persons in the United States from 1999 to 2001. *J Clin Microbiol* 2004;42:2944–2951.
123. Friedman CR, Hoekstra RM, Samuel M, et al. Risk factors for sporadic *Campylobacter* infection in the United States: a case-control study in FoodNet sites. *Clin Infect Dis* 2004;38:S285–S296.
124. CDC. Mass treatment of humans exposed to rabies—New Hampshire, 1994. *MMWR Morb Mortal Wkly Rep* 1995;44:484–486.
125. Chang HGH, Eidson M, Noonan-Toly C, et al. Public health impact of reemergence of rabies, New York. *Emerg Infect Dis* 2002;8:909–913.
126. CDC. Public health response to a potentially rabid bear cub—Iowa, 1999. *MMWR Morb Mortal Wkly Rep* 1999;48:971–973.
127. CDC. Public health dispatch: multiple human exposures to a rabid bear cub at a petting zoo and barnwarming—Iowa, August 1999. *MMWR Morb Mortal Wkly Rep* 1999;48:761.
128. Green AL, Carpenter LR, Dunn JR. Rabies epidemiology, risk assessment, and pre- and post exposure vaccination. *Vet Clin North Am Exot Anim Pract* 2011;14:507–518.
129. Robbins A, Eidson M, Keegan M, et al. Bat incidents at children's camps, New York State, 1998–2002. *Emerg Infect Dis* 2005;11:302–305.
130. Shinde V, Bridges CB, Uyeki TM, et al. Triple-reassortant swine

influenza A (H1) in humans in the United States, 2005–2009 (Erratum published in *N Engl J Med* 2009;361:102). *N Engl J Med* 2009;360:2616–2625.
131. Yassine H, Khatri M, Zhang Y, et al. Characterization of triple reassortant H1N1 influenza A viruses from swine in Ohio. *Vet Microbiol* 2009;139:132–139.
132. Vincent AL, Swenson SL, Lager KM, et al. Characterization of an influenza A virus isolated from pigs during an outbreak of respiratory disease in swine and people during a county fair in the United States. *Vet Microbiol* 2009;137:51–59.
133. Wells DL, Hopfensperger DJ. Swine influenza virus infections. Transmission from ill pigs to humans at a Wisconsin agricultural fair and subsequent probable person-to-person transmission. *JAMA* 1991;265:478–481.
134. Cox CM, Neises D, Garten RJ, et al. Swine influenza virus A (H3N2) infection in human, Kansas, USA, 2009. *Emerg Infect Dis* 2011;17:1143–1144.
135. CDC. Swine-origin influenza A (H3N2) virus infection in two children—Indiana and Pennsylvania, July–August 2011. *MMWR Morb Mortal Wkly Rep* 2011;60:1213–1215.
136. CDC. Limited human-to-human transmission of novel influenza A (H3N2) virus—Iowa, November 2011. *MMWR Morb Mortal Wkly Rep* 2011;60:1615–1617.
137. CDC. Influenza A (H3N2) variant virus-related hospitalizations—Ohio, 2012 (Erratum published in *MMWR Morb Mortal Wkly Rep* 2012;61:802). *MMWR Morb Mortal Wkly Rep* 2012;61:764–767.
138. CDC. Update: influenza A (H3N2)v transmission and guidelines—five states, 2011. *MMWR Morb Mortal Wkly Rep* 2012;60:1741–1744.
139. Wong KK, Greenbaum A, Moll ME, et al. Outbreak of influenza A (H3N2) variant virus infection among attendees of an agricultural fair, Pennsylvania, USA, 2011. *Emerg Infect Dis* 2012;18:1937–1944.
140. Bowman AS, Nolting JM, Nelson SW, et al. Subclinical influenza virus A infections in pigs exhibited at agricultural fairs, Ohio, USA, 2009–2011. *Emerg Infect Dis* 2012;18:1945–1950.
141. Vincent AL, Ma W, Lager KM, et al. Swine influenza viruses: a North American perspective. *Adv Virus Res* 2008;72:127–154.
142. Howden KJ, Brockhoff EJ, Caya FD, et al. An investigation into human pandemic influenza virus (H1N1) 2009 on an Alberta swine farm. *Can Vet J* 2009;50:1153–1161.
143. CDC. Brief report: tularemia associated with a hamster bite—Colorado, 2004. *MMWR Morb Mortal Wkly Rep* 2005;53:1202–1203.
144. Scheftel JM, Griffith JM, Leppke BA, et al. Tularaemia in Minnesota: case report and brief epidemiology. *Zoonoses Public Health* 2010;57:e165–e169.
145. Talan DA, Citron DM, Abrahamian FM, et al. Bacteriologic analysis of infected dog and cat bites. Emergency Medicine Animal Bite Infection Study Group. *N Engl J Med* 1999;340:85–92.
146. Cohen JI, Davenport DS, Stewart JA, et al. Recommendations for prevention of and therapy for exposure to B virus (Cercopithecine herpesvirus 1). *Clin Infect Dis* 2002;35:1191–1203.
147. CDC. Fatal cercopithecine herpesvirus 1 (B virus) infection following a mucocutaneous exposure and interim recommendations for worker protection. *MMWR Morb Mortal Wkly Rep* 1998;47:1073–1076.
148. Hullinger G, Cole J Jr, Elvinger F, et al. Dermatophytosis in show lambs in the United States. *Vet Dermatol* 1999;10:73–76.
149. Scott WA. Ringworm outbreak. *Vet Rec* 1986;118:342.
150. Lederman ER, Austin C, Trevino I, et al. ORF virus infection in children: clinical characteristics, transmission, diagnostic methods, and future therapeutics. *Pediatr Infect Dis J* 2007;26:740–744.
151. Stover J, Dolensek E, Basford S, et al. Contagious ecthyma in a children's zoo. *J Zoo Anim Med* 1986;17:115–116.
152. Marennikova SS, Maltseva NN, Korneeva VI, et al. Outbreak of pox disease among Carnivora (Felidae) and Edentata. *J Infect Dis* 1977;135:358–366.
153. Ninove L, Domart Y, Vervel C, et al. Cowpox virus transmission from pet rats to humans, France. *Emerg Infect Dis* 2009;15:781–784.
154. Kile JC, Fleishchauer AT, Beard B, et al. Transmission of monkeypox among persons exposed to infected prairie dogs in Indiana in 2003. *Arch Pediatr Adolesc Med* 2005;159:1022–1025.
155. CDC. Update: multistate outbreak of monkeypox—Illinois, Indiana, Kansas, Missouri, Ohio, and Wisconsin, 2003. *MMWR Morb Mortal Wkly Rep* 2003;52:642–646.
156. Nemetz T, Shotts E Jr. Zoonotic diseases. In: Stoskopf MK, ed. *Fish medicine*. Philadelphia: WB Saunders Co, 1993:214–220.
157. Gray S, Smith RS, Reynolds N, et al. Fish tank granuloma. *BMJ* 1990;300:1069–1070.
158. Lewis FMT, Marsh BJ, von Reyn CF. Fish tank exposure and cutaneous infections due to *Mycobacterium marinum*: tuberculin skin testing, treatment, and prevention. *Clin Infect Dis* 2003;37:390–397.
159. Angarano DW, Parish LC. Comparative dermatology: parasitic disorders. *Clin Dermatol* 1994;12:543–550.
160. Arlian LG. Biology, host relations, and epidemiology of *Sarcoptes scabiei*. *Annu Rev Entomol* 1989;34:139–161.
161. Scott D, Horn R Jr. Zoonotic dermatoses of dogs and cats. *Vet Clin North Am Small Anim Pract* 1987;17:117–144.
162. Lucky AW, Sayers CP, Argus JD, et al. Avian mite bites acquired from a new source—pet gerbils: report of 2 cases and review of the literature. *Arch Dermatol* 2001;137:167–170.
163. Molina CP, Ogburn J, Adegboyega P. Infection by *Dipylidium caninum* in an infant. *Arch Pathol Lab Med* 2003;127:e157–e159.
164. Russell WC II, Kinzer G, DeShields E. *Dipylidium caninum* infection in a 14-month-old child. *South Med J* 1973;66:1060–1062.
165. Schantz PM. *Toxocara* larva migrans now. *Am J Trop Med Hyg* 1989;41(suppl 3):S21–S34.
166. Michalak K, Austin C, Diesel S, et al. *Mycobacterium tuberculosis* infection as a zoonotic disease: transmission between humans and elephants. *Emerg Infect Dis* 1998;4:283–287.
167. Stetter M, Mikota S, Gutter A, et al. Epizootic of *Mycobacterium bovis* in a zoologic park. *J Am Vet Med Assoc* 1995;207:1618–1621.
168. Kiers A, Klarenbeek A, Mendelts B, et al. Transmission of *Mycobacterium pinnipedii* to humans in a zoo with marine mammals. *Int J Tuberc Lung Dis* 2008;12:1469–1473.
169. Murphree R, Warkentin JV, Dunn JR, et al. Elephant-to-human transmission of tuberculosis, 2009. *Emerg Infect Dis* 2011;17:366–371.
170. Oh P, Granich R, Scott J, et al. Human exposure following *Mycobacterium tuberculosis* infection of multiple animal species in a metropolitan zoo. *Emerg Infect Dis* 2002;8:1290–1293.
171. US Animal Health Association Elephant Tuberculosis Subcommittee. Guidelines for the control of tuberculosis in elephants 2010. Available at: www.aphis.usda.gov/animal_welfare/downloads/elephant/elephant_tb_2010.pdf. Accessed Sep 27, 2013.
172. Heymann DL. *Control of communicable diseases manual*. 19th ed. Washington, DC: American Public Health Association, 2008.
173. Whelan J, Schimmer B, de Bruin A, et al. Visits on 'lamb-viewing days' at a sheep farm open to the public was a risk factor for Q fever in 2009. *Epidemiol Infect* 2012;140:858–864.
174. Smith KA, Campbell CT, Murphy J, et al. Compendium of measures to control *Chlamydophila psittaci* infection among humans (psittacosis) and pet birds (avian chlamydiosis), 2010 National Association of State Public Health Veterinarians (NASPHV). *J Exot Pet Med* 2011;20:32–45.
175. Christensen A, Jarløv J, Ingeberg S. The risk of ornithosis among the staff of Copenhagen Zoo. *Ugeskr Laeger* 1990;152:818–820.
176. Eidson M. Psittacosis/avian chlamydiosis. *J Am Vet Med Assoc* 2002;221:1710–1712.
177. Hyde SR, Benirschke K. Gestational psittacosis: case report and literature review. *Mod Pathol* 1997;10:602–607.
178. AVMA Task Force on Canine Aggression and Human-Canine Interactions. A community approach to dog bite prevention. *J Am Vet Med Assoc* 2001;218:1732–1749.
179. Associated Press. Teen killed by tiger at Kansas sanctuary. 2005. Available at www.foxnews.com/story/2005/08/19/teen-killed-by-tiger-at-kansas-sanctuary/. Accessed Sep 6, 2013
180. Kelso JM, Fox RW, Jones RT, et al. Allergy to iguana. *J Allergy Clin Immunol* 2000;106:369–372.
181. Fairley JA, Suchniak J, Paller AS. Hedgehog hives. *Arch Dermatol* 1999;135:561–563.
182. Chapman MD, Wood RA. The role and remediation of ani-

mal allergens in allergic diseases. *J Allergy Clin Immunol* 2001; 107(suppl 3):S414–S421.
183. Bardana EJ Jr. What characterizes allergic asthma? *Ann Allergy* 1992;68:371–373.
184. Lincoln T, Bolton N, Garrett A Jr. Occupational allergy to animal dander and sera. *J Occup Med* 1974;16:465–469.
185. Phillips JF, Lockey RF. Exotic pet allergy. *J Allergy Clin Immunol* 2009;123:513–515.
186. Levine EG, Manilov A, McAllister SC, et al. Iguana bite-induced hypersensitivity reaction. *Arch Dermatol* 2003;139:1658–1659.
187. Casemore DP. Educational farm visits and associated infection hazards. *Commun Dis Rep CDR Rev* 1989;19:3.
188. Dawson A, Griffin R, Fleetwood A, et al. Farm visits and zoonoses. *Commun Dis Rep CDR Rev* 1995;5:R81–R86.
189. Warshawsky B, Henry B, Gutmanis I, et al. An *E. coli* O157:H7 outbreak associated with an animal exhibit: Middlesex-London Health Unit investigation and recommendations—executive summary. Middlesex, London, ON, Canada: Middlesex-London Health Unit, 1999. Available at: www.healthunit.com/uploads/mlhu-e-coli-o157h7-outbreak.pdf. Accessed Sep 10, 2013.
190. Commonwealth of Massachusetts Department of Public Health. Recommendations for petting zoos, petting farms, animal fairs, and other events where contact between animals and people is permitted. Boston: Commonwealth of Massachusetts Department of Public Health, Bureau of Communicable Disease Control, 2001. Available at: www.mass.gov/eohhs/docs/dph/cdc/rabies/reduce-zoos-risk.pdf. Accessed Sep 10, 2013.
191. Washington State Department of Health. Zoonotic diseases rules and guidelines. Olympia, Wash: Washington State Department of Health, 2013. Available at: www.doh.wa.gov/YouandYourFamily/IllnessandDisease/AnimalTransmittedDiseases/RulesandGuidelines.aspx. Accessed Sep 10, 2013.
192. Pennsylvania General Assembly. Act 211, statute 3 Pa.C.S.A. § 2501 – 2504: Animal exhibition sanitation 2002. Available at: www.legis.state.pa.us/WU01/LI/LI/CT/HTM/03/00.025.HTM. Accessed Sep 10, 2013.
193. North Carolina Department of Agriculture and Consumer Services. Enacted animal exhibition legislation, 2005. Available at: www.ncagr.gov/oep/AnimalContactExhibit.htm Accessed Sep 10, 2013.
194. Association of Zoos and Aquariums. The accreditation standards and related policies. Silver Springs, Md: Association of Zoos and Aquariums, 2013. Available at: www.aza.org/uploadedFiles/Accreditation/Accred%20Standards%20(with%20elephants)(1).pdf. Accessed Sep 6, 2013.
195. CDC. Healthy pets healthy people. 2012. Available at: www.cdc.gov/healthypets/. Accessed Jun 21, 2013.
196. CDC. Healthy pets, healthy people. Posters. 2012. Available at: www.cdc.gov/healthypets/resources/posters.htm Accessed Jun 21, 2013.
197. Brown CM, Conti L, Ettestad P, et al. Compendium of animal rabies prevention and control, 2011. Available at: www.nasphv.org/Documents/RabiesCompendium.pdf. Accessed Jun 21, 2013.
198. Anderson ME, Weese JS. Video observation of hand hygiene practices at a petting zoo and the impact of hand hygiene interventions. *Epidemiol Infect* 2012;140:182–190.
199. Bondeson L. Assessment of measures to prevent disease associated with animals in agricultural fairs—Maine, 2008. *Am J Infect Control* 2009;37:665–667.
200. Erdozain G, KuKanich K, Chapman B, et al. Observation of public health risk behaviours, risk communication and hand hygiene at Kansas and Missouri petting zoos—2010–2011. *Zoonoses Public Health* 2013;60:304–310.
201. Midwest Plan Service. *Heating, cooling, and tempering air for livestock housing.* Ames, Iowa: Iowa State University Press, 1990.
202. Ross C, Morrow PS. Q fever: an issue in occupational health & safety? An overview of the methods of control and the effects of *Coxiella burnetii* on the human host. *J R Soc Health* 1994;114:151–152.
203. Hansen G. Animals in Kansas schools: guidelines for visiting and resident pets. Topeka, Kans: Kansas Department of Health and Environment, 2004. Available at: www.kdhe.state.ks.us/pdf/hef/ab1007.pdf. Accessed Jun 21, 2013.
204. National Association of Biology Teachers. NABT position statement. The use of animals in biology education. Reston, Va: National Association of Biology Teachers, 2008. Available at: www.nabt.org/websites/institution/File/docs/use%20of%20animals.pdf. Accessed Jun 21, 2013.

Appendix 1

Animals in Public Settings: Guidelines for Venue Operators and Staff Members

Operators and staff members should be aware of the following risks for disease and injury associated with animals in public settings:

- Disease and injuries have occurred following contact with animals and their environment.
- Direct contact with some animals is inappropriate in public settings, depending on the expected audience. For example, direct contact with ill animals is inappropriate for any public group. In addition, direct contact with preweaned calves, reptiles, amphibians, and live poultry is not appropriate for children < 5 years of age. Other animals for which contact is of increased concern include other ruminants (eg, goats and sheep). Reptiles and amphibians should not be given as prizes at fairs, carnivals, or other events. Dangerous animals (eg, nonhuman primates, certain carnivores, other rabies reservoir species, and venomous reptiles) should be prohibited from direct contact.
- Healthy animals can carry germs that make visitors sick.
- Visitors can pick up germs when they touch animals or animal droppings or enter an animal's environment.
- Visitors can rid themselves of most germs acquired if they wash their hands immediately after leaving an animal area. Visitors should wash their hands even if they did not directly contact the animals.
- The risk for developing serious or life-threatening illnesses from contact with animals is higher among certain visitors, especially young children (ie, those < 5 years of age), persons ≥ 65 years of age, pregnant women, and persons with weakened immune systems.

Operators and staff members should take the following steps to maintain a safe environment when animals are present in public settings:

- Design the venue with safety in mind by having designated animal areas, nonanimal areas, and transition areas.
- Do not permit any animals other than service animals in nonanimal areas.
- Provide hand-washing facilities where food and beverages are stored, prepared, served, or consumed.
- Assign trained staff members to monitor animal contact areas.
- Exclude food and beverages, toys, pacifiers, spill-proof cups, and baby bottles, and prohibit smoking in animal contact areas.
- Keep the animal areas as clean and disinfected as possible, and limit visitor contact with manure and animal bedding.
- Allow feeding of animals only if contact with animals can be controlled (eg, over a barrier).
- Minimize use of animal areas for public activities (eg, weddings and dances).
- Design transition areas for entering and exiting animal areas with appropriate signs or other forms of notification regarding risks associated with animal contact and location of hand-washing facilities.
- Maintain hand-washing stations that are accessible to children, and direct visitors to wash their hands when exiting animal areas.
- Position hand-washing stations in places that encourage hand washing when exiting animal areas.
- Ensure that animals receive appropriate preventive care, including vaccinations and parasite control appropriate for the species.
- Provide potable water for animals.
- Prohibit consumption of unpasteurized dairy products (eg, raw milk), ciders, and juices.

Operators and staff members should educate visitors regarding animal contact in public settings:

- Inform visitors about the risks for disease and injury before they enter animal areas.
- Provide simple instructions in multiple age- and language-appropriate formats.
- Direct visitors to wash their hands and assist children with hand washing immediately after visiting an animal area.
- Advise visitors that they should not eat, drink, or place things in their mouths after animal contact or visiting an animal area until they have washed their hands.
- Advise visitors to closely supervise children and to be aware that objects such as clothing, shoes, and stroller wheels can become soiled and serve as a source of germs after leaving an animal area.
- Make visitors aware that young children, persons ≥ 65 years of age, pregnant women, and persons with weakened immune systems are at increased risk for serious illness.

Hand washing is the most important prevention step for reducing disease transmission associated with animals in public settings.

Appendix 2

Hand-Washing Recommendations to Reduce Disease Transmission from Animals in Public Settings

General Recommendations

Hand washing is the most important prevention step for reducing disease transmission associated with animals in public settings. Hands should always be washed immediately when exiting animal areas, after removing soiled clothing or shoes, and before eating or drinking. Venue staff members should encourage hand washing as persons exit animal areas.

Correct Hand-Washing Procedure

- Wet hands with clean, running water (warm or cold) and apply soap; rub hands together to make a lather and scrub them well (be sure to scrub the backs of hands, between fingers, and under nails); continue rubbing hands for at least 20 seconds; and rinse hands well under running water.
- If possible, use a disposable paper towel to protect clean hands when turning off the faucet.
- Dry hands with a clean disposable paper towel or air dry them. Do not dry hands on clothing.
- Assist young children with washing their hands.

Establishment and Maintenance of Hand-Washing Facilities or Stations

- The number of hand-washing facilities or stations should be sufficient for the maximum anticipated attendance, and facilities should be accessible for children (ie, low enough for children to reach or equipped with a stool), adults, and persons with disabilities.
- Hand-washing facilities stations should be conveniently located in transition areas between animal and nonanimal areas and in the nonanimal food concession areas.
- Maintenance of hand-washing facilities and stations should include routine cleaning and restocking to ensure an adequate supply of paper towels and soap.
- Running water should be of sufficient volume and pressure to remove soil from hands. Volume and pressure might be substantially reduced if the water supply is furnished from a holding tank; therefore, a permanent, pressurized water supply is preferable.
- Hand-washing stations should be designed so that both hands are free for hand washing by having operation with a foot pedal or water that stays on after hand faucets are turned on.
- Liquid soap dispensed by a hand pump or foot pump is recommended.
- Hot water is preferable, but if the hand-washing facilities or stations are supplied with only cold water, a soap that emulsifies easily in cold water should be provided.
- Communal basins, in which water is used by more than one person at a time, are not adequate hand-washing facilities.

Recommendations Regarding Hand-Sanitizing Agents

- Washing hands with soap and water is the best way to reduce the number of germs on them. If soap and water are not available, use an alcohol-based hand sanitizer that contains at least 60% alcohol.
- Visible contamination and dirt should be removed before using hand sanitizers. Hand sanitizers are not effective when hands are visibly dirty.
- Even when hand sanitizer is used, visitors should always wash hands with soap and water as soon as possible after exiting animal areas.
- Alcohol-based hand sanitizers can quickly reduce the number of germs on hands in some situations, but sanitizers are not effective against all germs.

Correct Use of Hand Sanitizers

- Apply the product to the palm of one hand.
- Rub your hands together.
- Rub the product over all surfaces of your hands and fingers until your hands are dry.

Hand-Washing Sign Recommendations

- At venues where human-animal contact occurs, signs regarding proper hand-washing practices are critical to reduce disease transmission.
- Signs that remind visitors to wash hands should be posted at exits from animal areas (ie, exit transition areas) and in nonanimal areas where food is served and consumed.
- Signs should be posted that direct all visitors to hand-washing stations when exiting animal areas.
- Signs with proper hand-washing instructions should be posted at hand-washing stations and restrooms to encourage proper practices.
- Hand-washing signs should be available in multiple age- and language-appropriate formats.

Appendix 3

Guidelines for Exhibition of Animals in School and Child-Care Settings

General Guidelines

- Animals are effective and valuable teaching aids, but safeguards are required to reduce the risk for infection and injury. Other groups have developed recommendations similar to those provided here.[174,203,204]
- Ensure that teachers and staff know which animal species are inappropriate as residents or visitors to the facility and which animals should not be in direct contact with children (*See* animal-specific guidelines in this Appendix).
- Ensure that personnel providing animals for educational purposes are knowledgeable regarding animal handling and zoonotic disease issues. Persons or facilities that display animals to the public should be licensed by the USDA.
- Inform parents of the presence of animals as well as the benefits and potential risks associated with animals in school classrooms. Consult with parents to determine special considerations needed for children who are immunocompromised, have allergies, or have asthma.
- Educate children about germs and proper hand-washing technique.
- Wash hands after contact with animals, animal products or feed, or animal environments.
- Supervise human-animal contact, particularly involving children < 5 years of age.
- Display animals in enclosed cages or under appropriate restraints.
- Do not allow animals to roam, fly free, or have contact with wild animals.
- Designate specific areas for animal contact. Do not allow food or drink in animal contact areas; do not allow animals in areas where food and drink are stored, prepared, served, or consumed.
- Clean and disinfect all areas where animals and animal products have been present. Children should perform this task only under adult supervision.
- Do not clean animal cages or enclosures in sinks or other areas used to store, prepare, serve, or consume food and drinks.
- Obtain a certificate of veterinary inspection, proof of rabies vaccination, or both according to local or state requirements for the species being exhibited. Also, ensure veterinary care, including preventive health programs for endo- and ectoparasites, as appropriate for the species.

Animal-Specific Guidelines

Refer to the general guidelines for animals that do not have specific recommendations provided in this section (eg, nonpsittacine birds; domestic dogs, cats, rabbits, and rodents [including mice, rats, hamsters, gerbils, guinea pigs, and chinchillas]).

- Guide, hearing assistance, or other service animals and animals used in law enforcement: These may be used in accordance with recommendations from the sponsoring organizations when they are under the control of a person familiar with the specific animal.
- Psittacine birds (eg, parrots, parakeets, and cockatiels): Consult the psittacosis compendium[174] and seek veterinary advice.
- Reptiles (eg, turtles, snakes, and lizards): Do not keep reptiles in facilities with children < 5 years of age, and do not allow children < 5 years of age to have direct contact with these animals.
- Amphibians (eg, frogs, toads, salamanders, and newts): Do not keep amphibians in facilities with children < 5 years of age, and do not allow children < 5 years of age to have direct contact with these animals.
- Live poultry (eg, chicks, ducklings, and goslings): Do not keep live poultry in facilities with children < 5 years of age, and do not allow children < 5 years of age to have direct contact with these animals.
- Ferrets: Do not keep ferrets in facilities with children < 5 years of age, and do not allow children < 5 years of age to have direct contact with these animals to avoid bites. Ferrets should be up to date for rabies vaccination.
- Farm animals: Certain animals (eg, calves, goats, and sheep) intermittently excrete substantial numbers of germs; therefore, these farm animals are not appropriate in facilities with children < 5 years of age and should not be displayed to older children in school settings unless meticulous attention to personal hygiene can be ensured.
- Fish: Use disposable gloves when cleaning aquariums, and do not dispose of aquarium water in sinks used for food preparation or for obtaining drinking water.
- Animal products: Assume that products such as owl pellets and frozen rodents used to feed reptiles are contaminated with *Salmonella* organisms. Dissection of owl pellets should not be performed in areas where food is stored, prepared, served, or consumed. Children < 5 years of age should not be allowed to have direct contact with animal products unless the products have been treated to eliminate germs.

Animals Not Recommended in School or Child-Care Settings

- Inherently dangerous animals (eg, lions, tigers, cougars, and bears).
- Nonhuman primates (eg, monkeys and apes).
- Mammals at high risk for transmitting rabies (eg, bats, raccoons, skunks, foxes, and coyotes).
- Aggressive or unpredictable wild or domestic animals.
- Stray animals with unknown health and vaccination history.
- Venomous or toxin-producing spiders, insects, reptiles, and amphibians.
- Animals that present a high risk for zoonotic disease transmission (eg, reptiles, amphibians, and live poultry) or bites (eg, ferrets).

How to be Safe Around Animals!

Know that animals carry germs that can make people sick

Never eat, drink, or put things into your mouth in animal areas

Older adults, pregnant women, and young children should be extra careful around animals

Wash your hands with soap and water right after visiting the animal area

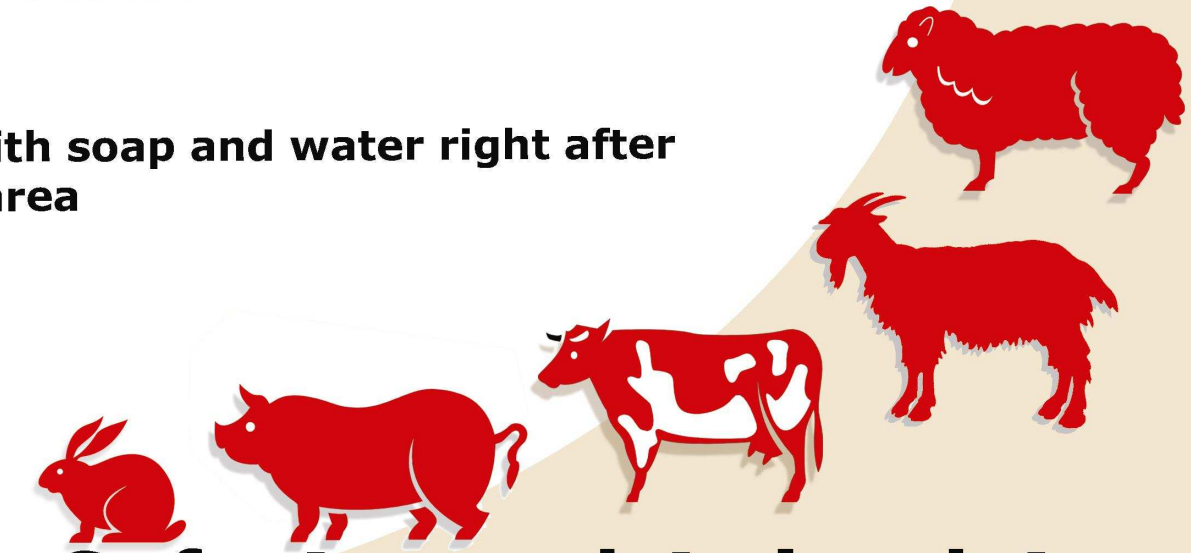

Appendix B

Examples of hand washing signs in English and Spanish

Wash Hands When Leaving Animal Exhibits

WHO

Everyone, especially young children, older individuals, and people with weakened immune systems

WHEN

<u>Always</u> Wash Hands:

- After touching animals or their living area
- After leaving the animal area
- After taking off dirty clothes or shoes
- After going to the bathroom
- Before preparing foods, eating, or drinking

HOW

- Wet your hands with clean, running water
- Apply soap
- Rub hands together to make a lather and scrub well, including backs of hands, between fingers, and under fingernails
- Rub hands at least 20 seconds. Need a timer? Hum the "Happy Birthday" song from beginning to end twice
- Rinse hands
- Dry hands using a clean paper towel or air dry them. Do not dry hands on clothing

For more information, visit CDC's Healthy Pets, Healthy People website (www.cdc.gov/healthypets) and CDC's Handwashing website (www.cdc.gov/handwashing).

Lávese las manos después de visitar las exhibiciones de animales

QUIÉNES

Todos, en especial niños, ancianos y personas que tienen sistemas inmunitarios debilitados.

CUÁNDO

Lávese las manos <u>siempre</u>:

- Después de tocar animales o el área en que habitan.
- Después de salir del área de los animales.
- Después de quitarse ropa o zapatos sucios.
- Después de ir al baño.
- Antes de preparar alimentos, comer o beber.

¿Cómo?

- Mójese las manos con agua limpia de la llave.
- Póngase jabón.
- Frótese las manos hasta formar espuma y restriéguelas bien, incluso en el dorso, entre los dedos y debajo de las uñas.
- Frótese las manos por lo menos 20 segundos. ¿Necesita medirlos? Tararee la canción del "Feliz cumpleaños" dos veces.
- Enjuáguese las manos.
- Séquese con una toalla de papel o con el secador. No se seque las manos en la ropa.

Para más información, visite los sitios web en inglés sobre mascotas sanas, gente saludable (www.cdc.gov/healthypets) y lavado de manos (www.cdc.gov/handwashing) de los CDC.

CS223510A

Appendix C

Animal Contact Area Facility Design Checklist

Animal Contact Area Facility Design Checklist

Facility Design

- ☐ Handwashing stations
  - Running water
  - Accessible for children and persons with disabilities
  - Plan in place for restocking paper towels, soap, and water
- ☐ Hand sanitizer
  - Should be used only as a supplement to soap and water; **does not replace soap and water for handwashing**
  - Plan in place for restocking sanitizer
- ☐ Petting of animals only allowed over/through barriers (fences); visitors not allowed into pens, strollers not allowed into pens
- ☐ No transport of manure/soiled bedding through public areas
- ☐ Transition area at entrance between non-animal and animal waste areas
  - Stroller and bag storage
  - **No strollers in animal contact area**
- ☐ Transition area at exit as people leave animal space and return to non-animal space
  - Handwashing stations positioned near exit so visitors cannot miss them
  - Food service and eating areas kept separate from animal contact area
- ☐ Surface, especially pen railings, cleaned daily using soap and water
- ☐ Feed provided in containers that won't be confused as human food (e.g. do not use ice cream cones)
- ☐ Other: _____

Animal Contact Area Facility Design Checklist

Staff and Visitor Education

- ☐ Review best practices and recommendations from the Animal Contact Compendium (*Appendix A)*
  - Educate staff about the risk for disease and injury associated with animals
  - Educate staff on how diseases are transmitted from animals to people
  - Educate staff on prevention messages that should be shared with visitors
- ☐ Ensure staff feel comfortable explaining prevention concepts to visitors
- ☐ Explain staff members' role(s) in the animal contact area
  - Teach people about animals
  - Teach people how to enjoy animals safely by following these best practices
- ☐ Signage in transition area at entrance to animal contact areas
  - Animals can carry germs that make people sick
  - No food or drink allowed in animal areas
  - No hand-to-mouth activities allowed in animal areas (drinking, eating, bottles, pacifiers)
  - No strollers allowed in animal contact areas
  - Children under 5 years old, senior citizens, pregnant women, and people with a chronic health condition or a weakened immune system should be extra careful around animals
- ☐ Signage in transition area at exit of animal contact areas
  - Wash hands thoroughly with soap and water immediately after visiting the animals
- ☐ Staff members present to encourage safe animal contact
  - Remind visitors to refrain from risky activities in the animal area (no drinking, no eating, no bottles, no pacifiers, no strollers)
  - Remind visitors to wash their hands after visiting the animal area
  - Remind parents to supervise children when around animals
- ☐ Other: _____

Appendix D

Animal Welfare Act Guidelines for County and State Fairs

Animal Care

www.aphis.usda.gov/animal_welfare February 2012

Factsheet

USDA United States Department of Agriculture

Animal and Plant Health Inspection Service
APHIS 41-05-013

Animal Welfare Act Guidelines for County and State Fairs

The Animal Welfare Act (AWA) requires those who exhibit animals to the public for compensation (e.g., prizes, stipends, products, or publicity that directly benefits that person's business, including donations) to obtain a license with the U.S. Department of Agriculture's (USDA) Animal and Plant Health Inspection Service (APHIS). In addition, some businesses—such as zoos—are required to be licensed regardless of whether or not they receive compensation. The AWA excludes certain activities from this requirement, including the exhibition of agricultural animals for the purposes of promoting agricultural arts, sciences, and production. This exemption covers agricultural exhibits at State and county fairs. However, some exhibition activities at these venues do require an AWA license.

Regulated Animal Exhibitors

Many people exhibit their animals at events such as county and State fairs. Although APHIS does not license the organizers of such events, the agency does encourage them to verify that those who exhibit animals covered under the AWA hold an AWA license. These entities include those who:

- Allow the public to view animals for compensation;
- Train, handle, or own animals used in film or television;
- Use photographs of live animals in promotional materials such as fliers and other advertisements;
- Operate a traveling, roadside, or stationary zoo;
- Perform with animals such as in a circus or other type of show; and/or
- Use animals in educational presentations.

Examples of regulated activities that often occur at events such as fairs include:

- Exhibition—including photo shoots—of big cats (regardless of animals' ages) and of nonhuman primates;
- Elephant rides;
- Camel rides; and
- Petting zoos.

Exempted Animal Exhibitors

The AWA exempts certain animal exhibitors from Federal regulation. Those who solely exhibit farm animals in agricultural events, race animals, or show privately owned pets (e.g., purebred dog and cat shows) are typically exempt.

Other examples of exempted animal exhibitions include:

- Horse races;
- Horse shows and exhibits;
- Rodeos; and
- Animal preserves and sanctuaries that do not use animals for promotional purposes (including in advertising materials), allow public access or viewing, or sell covered animals.

State and Local Laws

States are empowered to create and enforce their own humane treatment regulations, which, in many cases, exceed the AWA standards. AWA licensees must follow all State and local laws in addition to AWA standards. APHIS encourages the public to work with Federal, State, and local officials as well as local humane organizations to help eliminate inhumane treatment of animals.

[continued, reverse side]

AWA Standards, Compliance, and Inspections

The AWA mandates that licensed exhibitors meet minimum standards of humane care and handling for their animals. The law covers many things, from sanitation and cleanliness to space requirements for animal enclosures and recordkeeping protocols. For the complete list of standards, please refer to the AWA regulations, which can be found on the APHIS Web site at www.aphis.usda.gov/animal_welfare. To ensure that licensed exhibitors maintain AWA standards, licensees are also subject to unannounced compliance inspections of premises and animals covered under the law. (See the "Compliance Inspections" factsheet available at www.aphis.usda.gov/animal_welfare/pubs_reports.shtml).

Additional Information

For more information about licensing of animal exhibitors under the AWA, please contact APHIS' Animal Care regional offices at:

Eastern Region

Animal Care, APHIS-USDA
920 Main Campus Drive, Suite 200
Raleigh, NC 27606-5210
Phone: (919) 855-7100
Fax: (919) 855-7125
Email: aceast@aphis.usda.gov

Western Region

Animal Care, APHIS-USDA
Building B, Mailstop #3W11
2150 Centre Avenue
Fort Collins, CO 80526-8117
Phone: (970) 494-7478
Fax: (970) 494-7461
Email: acwest@aphis.usda.gov

USDA prohibits discrimination in all its programs and activities on the basis of race, color, national origin, gender, religion, age, disability, political beliefs, sexual orientation, or marital or family status. (Not all prohibited bases apply to all programs.) Persons with disabilities who require alternative means for communication of program information (Braille, large print, audiotape, etc.) should contact USDA's TARGET Center at (202) 720-2600 (voice and TDD). To file a complaint of discrimination, write USDA, Director, Office of Civil Rights, Room 326-W, Whitten Building, 1400 Independence Avenue, SW, Washington, DC 20250-9410 or call (202) 720-5964 (voice and TDD). USDA is an equal opportunity provider and employer.

Appendix E

Q fever Safety at Livestock Birthing Exhibits: Information for Operators and Managers

Q fever Safety at Livestock Birthing Exhibits: Information for Operators and Managers

Livestock birthing exhibits can be a meaningful experience for visitors of all ages. However, it is important for organizers and attendees to know that many animals, such as goats, sheep, and cattle, can have diseases that make people sick. Q fever is one of these diseases, making it important for heightened awareness for animal birthing center operators and guests.

What is Q fever?

Q fever is a disease caused by a bacteria that can result in fever, fatigue, chills, muscle pain, pneumonia, and may lead to miscarriages in pregnant women. A small portion of people with Q fever will go on to develop long-term infections, which can be life-threatening if not treated.

How do people get Q fever?

People become exposed when they breathe dust or air particles contaminated by animal waste. People are also exposed when they come in contact with infected animal body fluids, particularly placenta, birth fluids, and newborn animals. Other animal products such as feces, urine, milk, and blood can also serve as sources of Q fever.

Which people are especially vulnerable to Q fever and therefore should avoid working at birthing exhibits?

- Pregnant women
- People with weakened immune systems (such as those with AIDS; cancer and transplant patients who are taking certain immunosuppressive drugs; and those with inherited diseases that affect the immune system)
- People with heart valve disease or other heart problems

In order to decrease the likelihood of Q fever transmission, birthing exhibit staff should:

- Use dedicated clothing and boots for work in birthing areas to prevent bacteria from leaving the exhibit areas on boots or clothing.
- Promptly remove placenta, bedding and any other materials contaminated with birthing fluids from the birthing exhibit area.
  - » Exhibit design should allow disposal of these materials without travel through public areas.
  - » If possible, remove bedding then clean stalls when birthing exhibit is closed for public viewing.

National Center for Emerging and Zoonotic Infectious Diseases
Division of Vector Borne Diseases

CS261725

- Wear disposable gloves, plastic arm-length sleeves, goggles, boots, and respiratory protection (N95 recommended) when:
  - Assisting with animal births.
  - Cleaning birthing areas.
  - Disposing of birth products and animal waste from the birthing area.
- Be trained and certified to wear a respirator.*
- Wash hands with soap and water right after working with animals, bedding, feed, or other materials in the birthing area.
- Refrain from bringing food or beverages into the animal area.

Operators and Managers should design and manage birthing exhibits such that:

- Visitors cannot touch any birthing animals including newborn animals, birth products (placenta), or dirty bedding.
- Hand washing stations are readily available and well-stocked at exits.
  - If hand washing stations are not available, ensure an alcohol-based hand sanitizer that contains at least 60% alcohol is available.
- No eating, drinking, or smoking is allowed in the animal area.
- Exhibits are located in properly ventilated areas.
  - If outdoors, protection from wind gusts should be considered.
  - If indoors, avoid placing exhibits near air ventilation intake ducts as Q fever can spread through contaminated air and dust particles.
  - Ideally, exhibits should be held in areas permanently designated for animal use. Multi-use facilities should be thoroughly disinfected following use as an animal birthing area.
- Dirty bedding and animal birth products are removed from the exhibit as soon as possible using safe waste disposal methods.
- The exhibit is closed if any abortions or stillbirths are observed.
  - Operators and managers should work with their veterinarian to determine the cause of abortions or stillbirths.

Operators and Managers should post staff and signage advising visitors to:

- Wash hands immediately upon their exit from the exhibit, even if they did not touch animals.
- Do not eat, drink or smoke in the animal exhibit area.
- Be aware that animals can carry germs that can make people sick.
- Closely monitor children, especially those under 5 years of age, around animal exhibits.
- Be aware of the increased risk of illness for groups such as pregnant women, people with weakened immune systems, and persons with heart valve disease or other heart problems.

***Talk to your doctor first about whether it is safe for you to wear a respirator.**

For more information about Q fever please visit:

www.cdc.gov/qfever, http://nasphv.org/Documents/AnimalContactCompendium2013.pdf, or

http://www.nasphv.org/Documents/Q_Fever_2013.pdf

Appendix F

Animal Care and Management Checklist

Animal Care and Management Checklist

Animal Care and Management

- ☐ Animals have a health certificate signed by a veterinarian
- ☐ All dogs, cats, ferrets, horses, cattle, and sheep are vaccinated against rabies
- ☐ No physical contact by the public with chicks, ducklings, reptiles, calves, or dangerous or exotic animals (e.g. primates, wolf pups)
- ☐ People who work with swine are vaccinated against seasonal influenza
- ☐ Animals are housed in a way that minimizes stress and overcrowding, and have access to shelter, food, and water
- ☐ Provide animals with potable water; do not leave hoses on the ground. If hoses are in a public place, label 'not for human consumption'
- ☐ Identify veterinarian(s) to call in case of sick or injured animals
    - Veterinarian: _____
    - Veterinarian: _____
- ☐ Immediately remove sick or injured animals, especially if they have diarrhea
    - A veterinarian should examine the animal, provide a diagnosis, and treat the animal
    - If an animal has a reportable disease, contact the Kansas Department of Agriculture at (785) 564-6601
    - If the disease is contagious to people, contact the local health department
- ☐ Identify local animal bite reporting procedure (i.e. who to call if an animal bite occurs). This may be Animal Control, Sheriff, Police Department, or the local health department
    - Animal Bite Contact: _____
- ☐ Animal vendors are licensed by the Kansas Department of Agriculture
    - No turtles (for sale, gifts, or prizes) with a shell length of less than 4 inches
- ☐ Other: _____

Appendix G

How to Wash and When to Wash signs

DID YOU WASH 'EM?

HOW TO WASH YOUR HANDS PROPERLY

- Use soap and warm, running water.
- Rub your hands vigorously for 20 seconds.
- Wash all surfaces, including:
  - *backs of hands*
  - *wrists*
  - *between fingers*
  - *tips of fingers*
  - *under fingernails*
- Rinse your hands well.
- Dry your hands with a paper towel, if possible.

Kansas Department of Health and Environment
1000 SW Jackson, Suite 330
Topeka, Kansas 66612
(785) 296-5600
www.kdheks.gov/bch/

Funded by the Kansas Health Foundation, Wichita, Kansas

Handwashing is the single most important action to stop spreading infection and disease.

When Should You Wash Your Hands?

You should always wash your hands after:

- Going to the toilet (or changing diapers)
- Coughing/sneezing or using a tissue
- Handling raw meat and poultry
- Touching lacerations/cut, sores or infected areas on the skin
- Handling or playing with pets
- Touching dirty kitchen equipment, utensils, dishes or work surfaces
- Smoking, eating or drinking and before handling foods
- When hands become visibly soiled

You should always wash your hands before:

- Touching or handling ready-to-eat foods, such as breads, deli meats, cheese, fruits and vegetables, etc.

The best way to prevent disease is to wash your hands.

Appendix H

Food Facilities Checklist

Food Facilities Checklist

Food Vendors

- ☐ Check license from each food vendor
  - Some licensing exemptions apply; if exempt; vendor should provide evidence of legal exemption
  - All food vendors should comply with food safety regulations and recommendations whether exempt from licensing or not
  - KDA Food Safety and Lodging: (785) 564-6767
- ☐ Check inspection reports on the KDA website for past violations: https://agriculture.ks.gov/divisions-programs/food-safety-lodging/inspection-results
- ☐ Identify the official Person in Charge for each food vendor
  - Maintain a log of contact information for each food vendor and each Person in Charge
- ☐ Review food facilities for compliance with regulations and recommendations
- ☐ Provide illness prevention resources to each vendor
  - Safe Food Preparation and Employee Health & Illness Prevention checklists
  - "How to Wash" and "When to Wash" graphics (Appendix E)
- ☐ _____

Facility Design

- ☐ Handwashing sinks
  - Must be available in each food facility
  - Should be convenient to areas where food and beverages are stored, prepared, served, or consumed
- ☐ Hand sanitizer (hand sanitizer should be used as a supplement to soap and water for consumers and does not replace soap and water for handwashing)
  - Plan in place for restocking sanitizer
- ☐ Indoor floors, walls, and ceiling surfaces
  - Should be smooth, durable, and easily cleanable
  - Should be nonabsorbent for areas subject to moisture such as food preparation areas and mobile food establishment servicing areas
  - Easily cleanable antislip floor coverings can be used for safety reasons
- ☐ Equipment for cooling, heating, and holding food
  - Must be sufficient in number and capacity to prepare and hold food at appropriate temperatures to prevent illness
  - All equipment must be cleaned thoroughly and maintained in a sanitary condition throughout the event
- ☐ _____

Food Facilities Checklist

Employee Health & Illness Prevention

- ☐ To prevent foodborne illness, individuals may not prepare or handle food when they are have been diagnosed with certain conditions, have certain symptoms, or have been exposed to certain conditions or symptoms.
- ☐ Any food handlers are required to report these symptoms and conditions to the Person in Charge, including providing necessary additional information such as the date of symptom onset or date of diagnosis.
- ☐ If a person reports any of the following symptoms, that individual must be excluded from handling food in accordance with the Kansas Food Code.
    - Vomiting
    - Diarrhea
    - Jaundice
    - Sore throat with fever
    - A lesion containing pus such as a boil or infected wound that is open or draining and is on the hands, wrists, exposed portions of the arms, or any other part of the body unless the lesion is protected by an impermeable cover AND (if on hands and wrists) is covered by a single-use glove
- ☐ If a person reports any of the following diagnoses, that individual must be excluded from handling food in accordance with the Kansas Food Code.
    - Norovirus
    - Hepatitis A virus
    - *Shigella*
    - Shiga toxin-producing (or enterohemorrhagic) *E. coli*
    - *Salmonella* Typhi (Typhoid fever)
        - Past history of Typhoid fever is also reportable to the Person in Charge is the diagnosis was within the past 3 months and antibiotic therapy was not received
- ☐ If a person reports any of the following exposures, that individual must be excluded from handling food in accordance with the Kansas Food Code.
    - Norovirus (within past 48 hours of the last exposure)
    - Shiga toxin-producing (or enterohemorrhagic) *E. coli* (within past 3 days of the last exposure)
    - *Salmonella* Typhi (within past 14 days of the last exposure)
    - Hepatitis A virus (within past 50 days of the last exposure)
- ☐ _____

Food Facilities Checklist

Safe Food Preparation

- ☐ Food handlers must practice frequent and effective handwashing
  - Post “How to Wash” and “When to Wash” graphics (Appendix E) prominently to increase handwashing compliance
- ☐ Food handlers must prevent cross-contamination of foods due to bare-hand contact by properly using suitable utensils such as deli tissue, spatulas, tongs, dispensing equipment, and single-use gloves when handling food
- ☐ Food must be properly prepared and held to prevent foodborne illness
  - Heating and refrigeration equipment should have thermometers to ensure proper temperatures
  - Cold foods must be held at temperatures below 40ºF
  - Hot foods must be held at temperatures above 140ºF
  - Food temperatures should be monitored frequently
- ☐ Each vendor should maintain a list of names and contact information for all individuals involved in food preparation, food handling, and food serving
- ☐ All food handlers should be properly trained in food safety, including food allergy awareness, as it relates to their assigned duties
- ☐ Persons unnecessary to the operation should not be allowed in the food preparation, food storage, or warewashing areas
- ☐ Any ice used as a food (in drinks) or as a cooling medium for food must be made from drinking water
- ☐ _____

Illness and Outbreak Reporting

- ☐ Immediately report any suspect outbreaks of any disease to the Kansas Department of Health and Environment at (877) 427-7317
- ☐ Any food establishment complaints or concerns should be reported to the Kansas Department of Agriculture at (785) 564-6767
- ☐ _____

Appendix I

Human and Animal Health Contacts Checklist

Human and Animal Health Contacts

- ☐ Local health department
  - _____
- ☐ Emergency department and urgent care facilities
  - _____
  - _____
  - _____
  - _____
- ☐ Veterinarians
  - _____
  - _____
- ☐ Kansas Department of Agriculture
  - Food Safety and Lodging Hotline:
    - Questions and complaints about food facilities or vendors
    - During business hours: (785) 564-6767
    - After hours: (800) 915-6163
  - Animal Disease Reporting Hotline: (785) 564-6601
    - Report a disease or an outbreak of disease among animals
- ☐ Kansas Department of Health and Environment
  - 24/7 Epidemiology and Disease Reporting Hotline: (877)427-7317
    - Report suspected outbreaks of disease (two or more ill persons) or for information on human health concerns
- ☐ Food facilities
  - Names and contact numbers for each Person in Charge
  - _____
  - _____
  - _____
  - _____
  - _____
  - _____
  - _____
  - _____
  - _____
  - _____
- ☐ Animal exhibits
  - Names and contact numbers for each Person in Charge
  - _____
  - _____
  - _____
  - _____